wishlist

Done

Schottky clamps from 0 to input, input to VCC

Remove Zener and resistor

Interrupt line needs pullup

0ohms breaking 5V and 3.3V rails so you can pull them to measure power

U8 needs 0.1uF decoupling caps

1uF, 10uF caps closer to the power supply

0.1uF on all vcc chip pins

10uF decoupling cap on 5V rail before LEDs

Filter caps on VREF

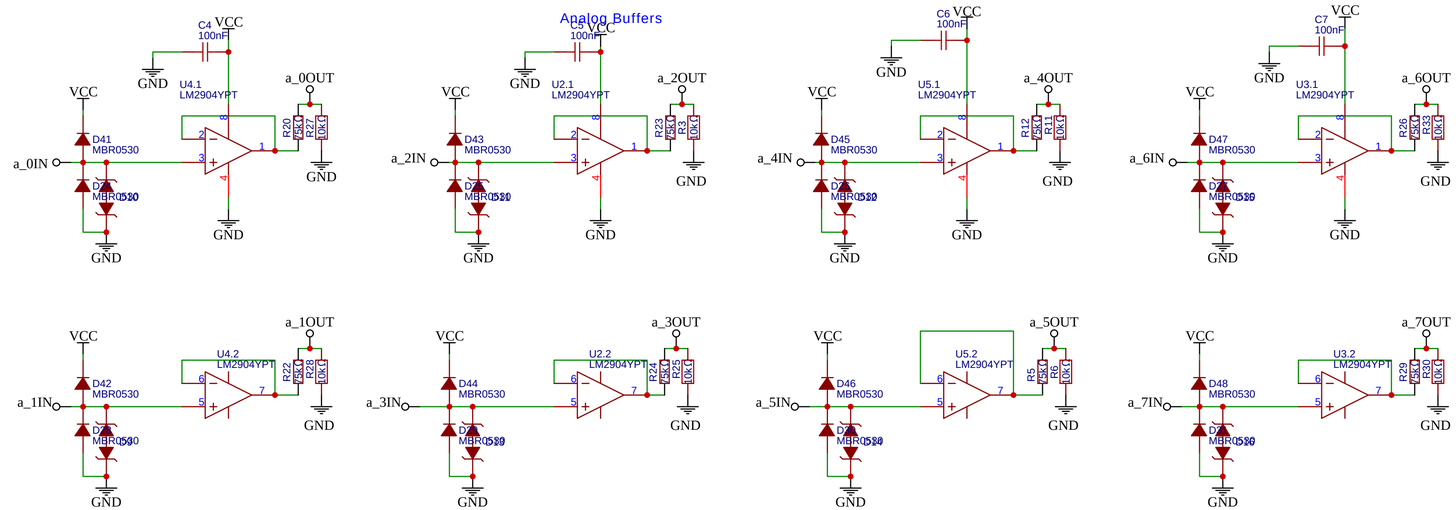

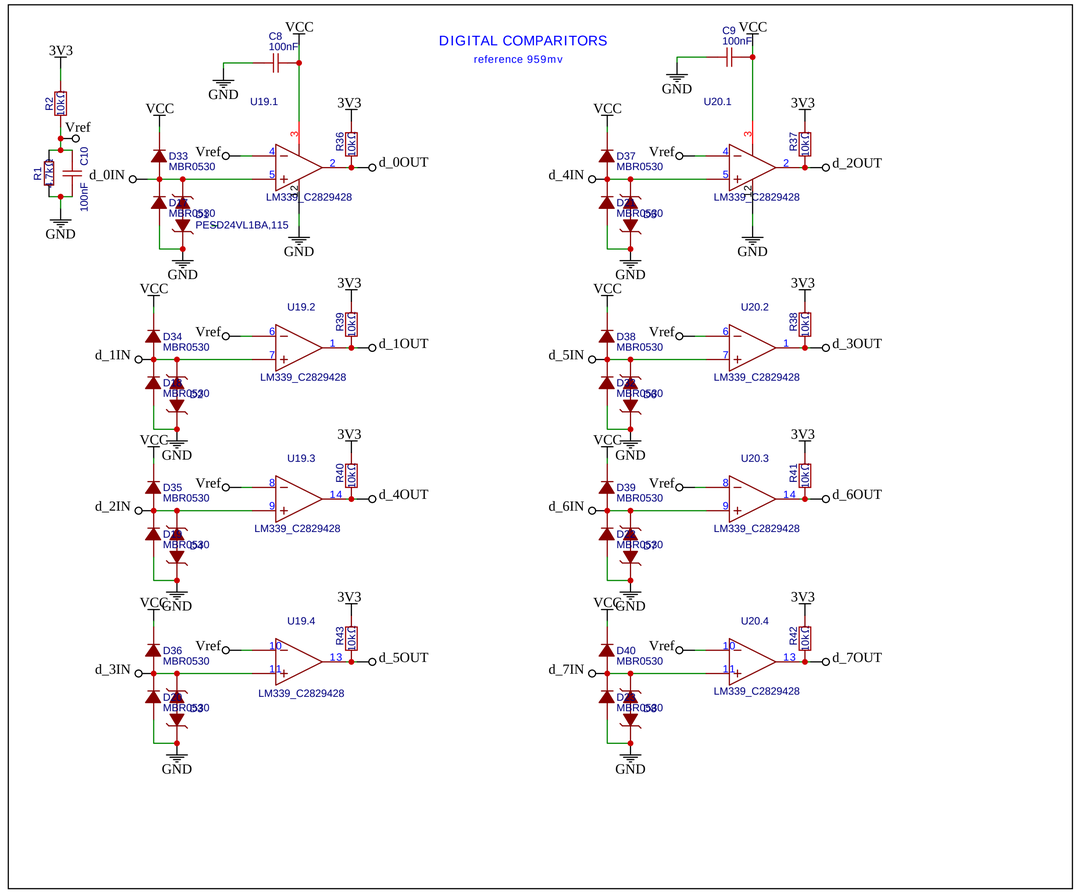

TITLE: Sheet_1		REV: 1.0
EasyEDA	Company: Your Company	Sheet: 1/1
	Date: 2024-10-22 Drawn By: MaxGoldenson	

3 Amp 40v --> 5v 3A buck

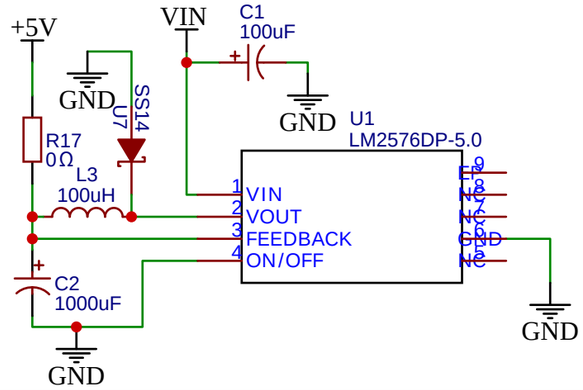

5v --> 3.3v 800mA Linear Reg.

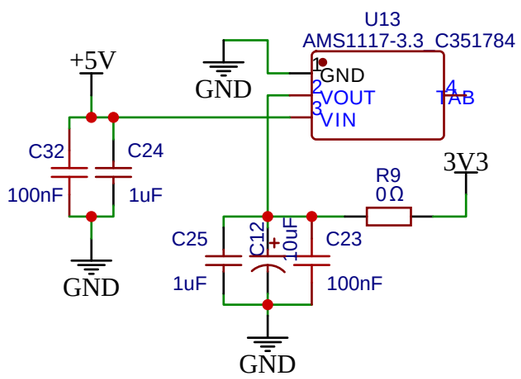

Verify logic for bootstrapping switch circuit

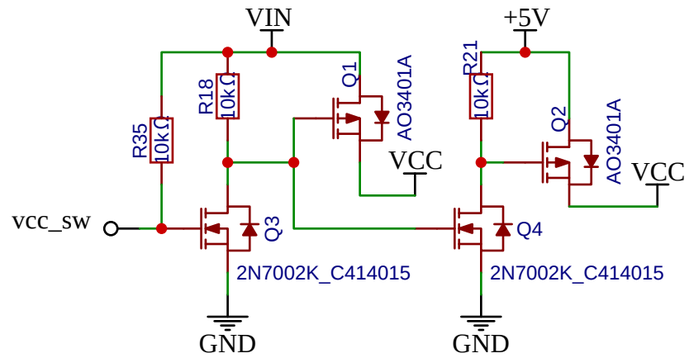

<-- check bootstrapping logic

USB PD Handler, 5v

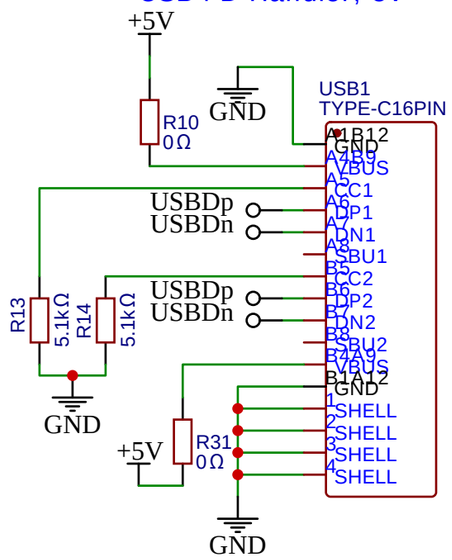

TITLE: Sheet_1		REV: 1.0
EasyEDA	Company: Your Company	Sheet: 1/1
	Date: 2024-10-22 Drawn By: MaxGoldenson	

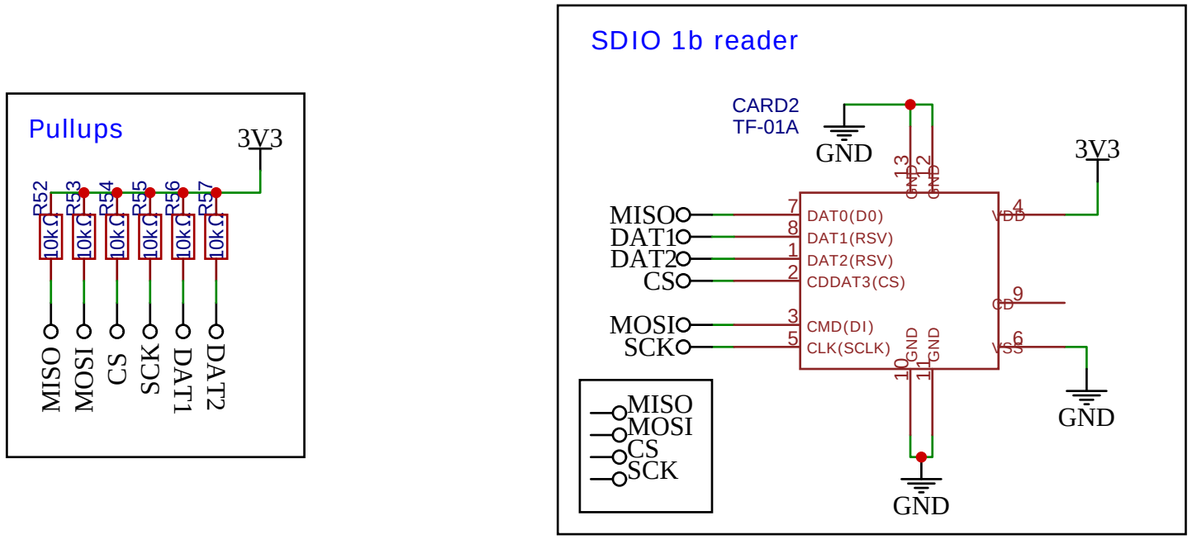

TITLE: Sheet_1	REV: 1.0
Company: Your Company	Sheet: 1/1
Date: 2024-10-22 Drawn By: MaxGoldenson	

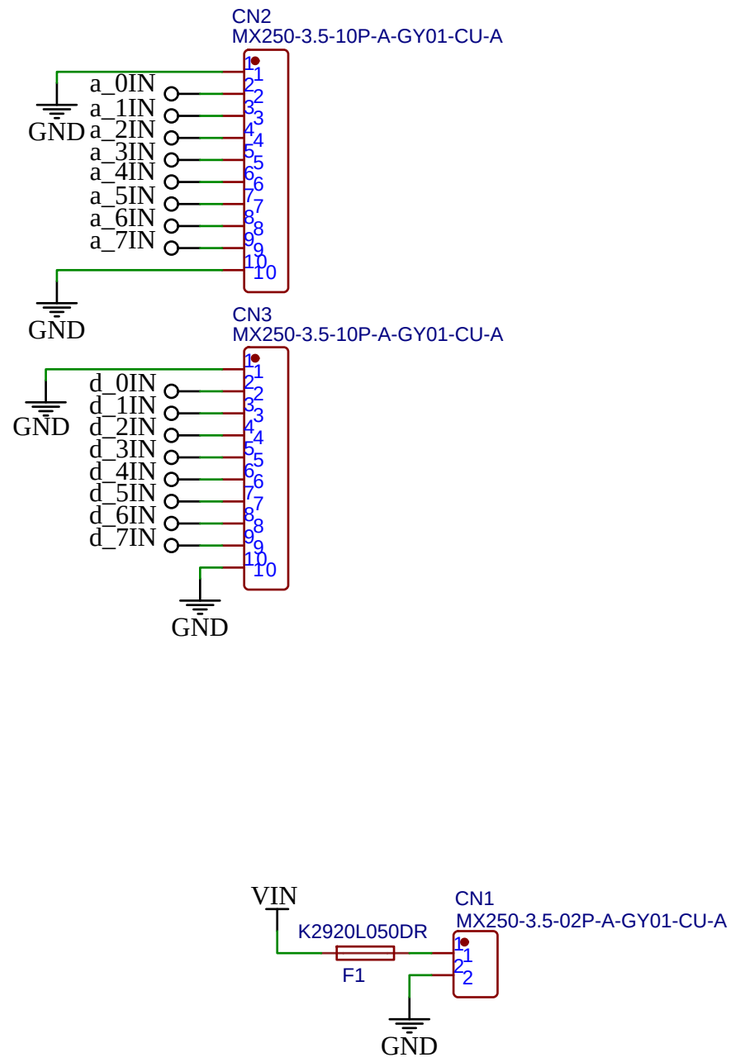

TITLE: Sheet_1		REV: 1.0
EasyEDA	Company: Your Company	Sheet: 1/1
	Date: 2024-12-08 Drawn By: MaxGoldenson	

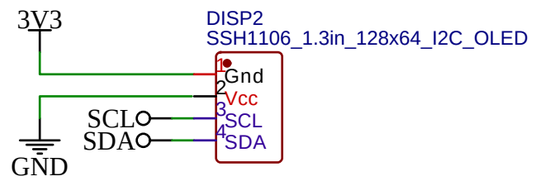

TITLE: Sheet_1		REV: 1.0
EasyEDA	Company: Your Company	Sheet: 1/1
	Date: 2024-12-08 Drawn By: MaxGoldenson	

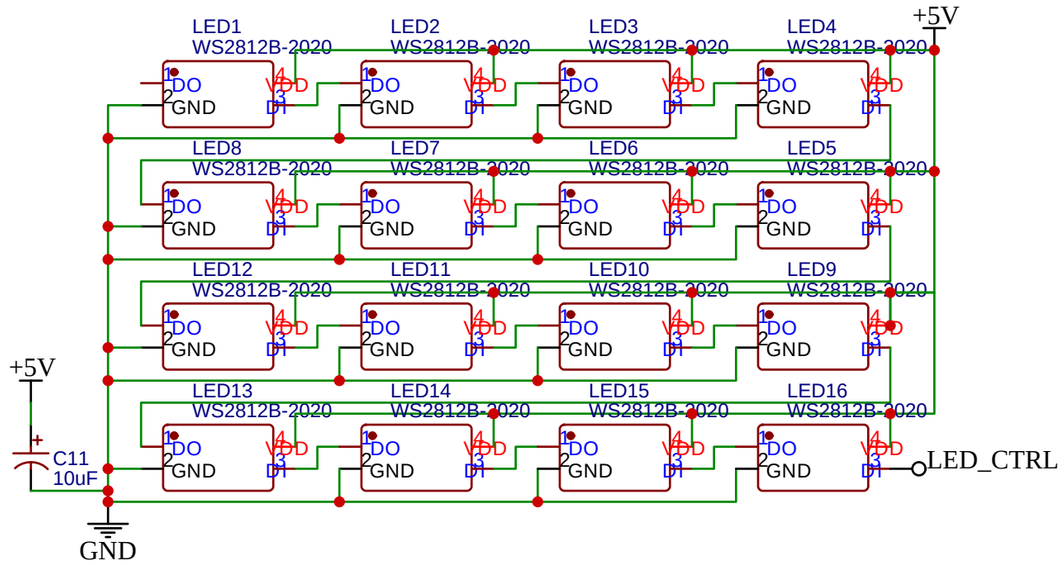

TITLE: Sheet_1		REV: 1.0
EasyEDA	Company: Your Company	Sheet: 1/1
	Date: 2024-12-08 Drawn By: MaxGoldenson	

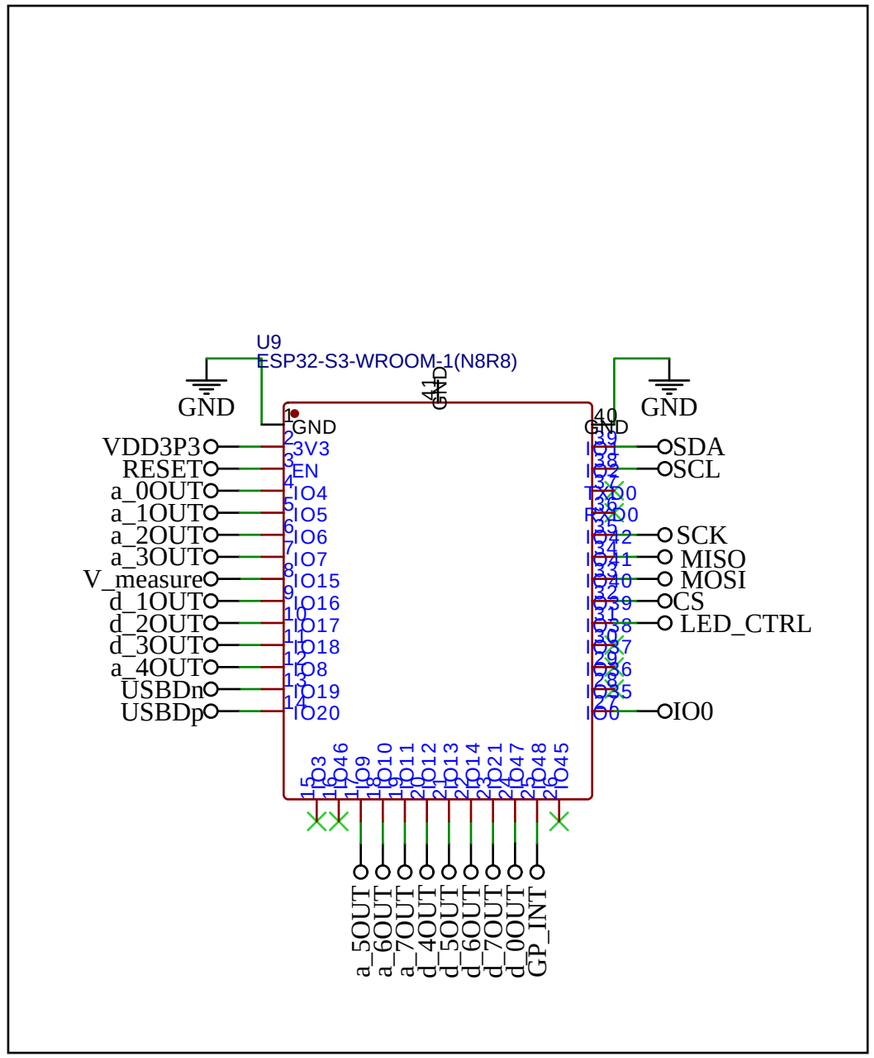

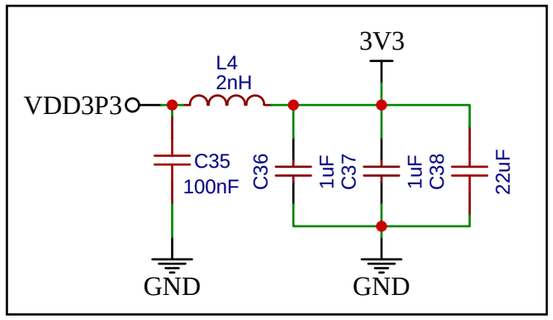

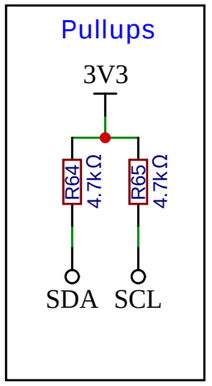

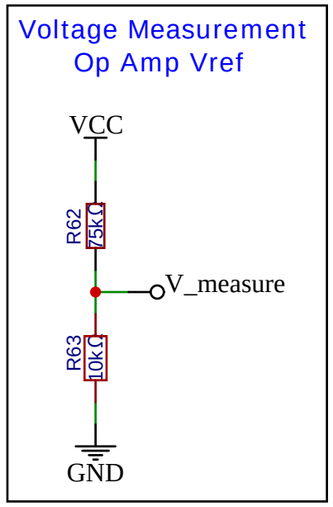

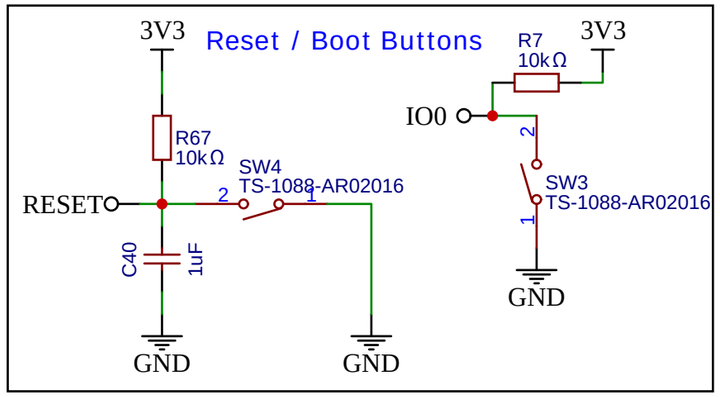

TITLE: Sheet_1		REV: 1.0
EasyEDA	Company: Your Company	Sheet: 1/1
	Date: 2025-02-02 Drawn By: MaxGoldenson	

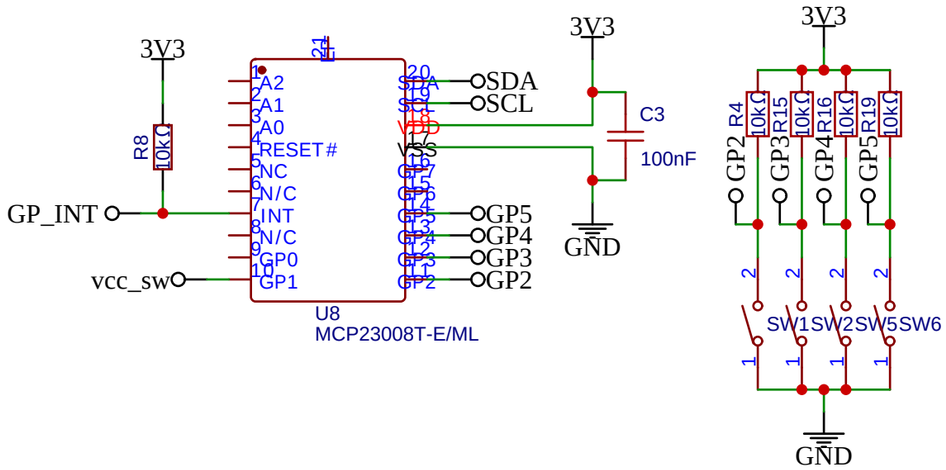

TITLE: Sheet_1		REV: 1.0
EasyEDA	Company: Your Company	Sheet: 1/1
	Date: 2025-02-02 Drawn By: MaxGoldenson	