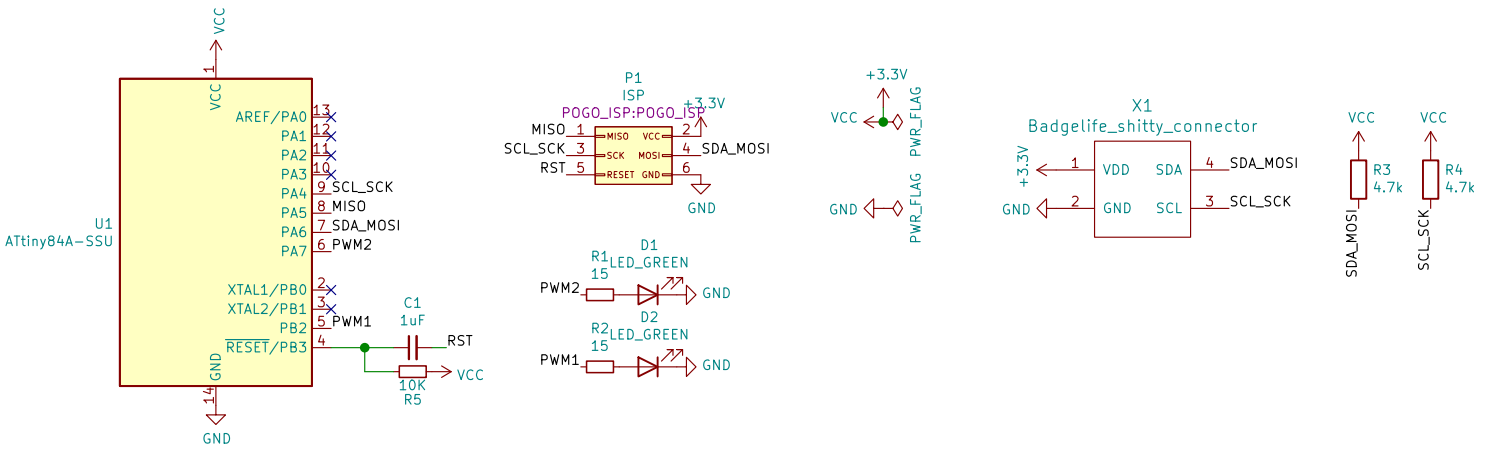

Max Grim

Deloitte Risk Advisory B.V.

Sheet: /

File: Badge addon Ninja prize.sch

Title: Ardennes 2020 Ninja Addon

Size: A4	Date: 2020-08-11	**Rev: 1**
KiCad E.D.A. kicad (5.1.7-0-10_14)		Id: 1/1