Maxime Hache

MECHANICAL ENGINEER PORTFOLIO

MORPHING THROMBECTOMY DEVICE - UC BERKELEY *Sep. 2025 - Jan. 2026*

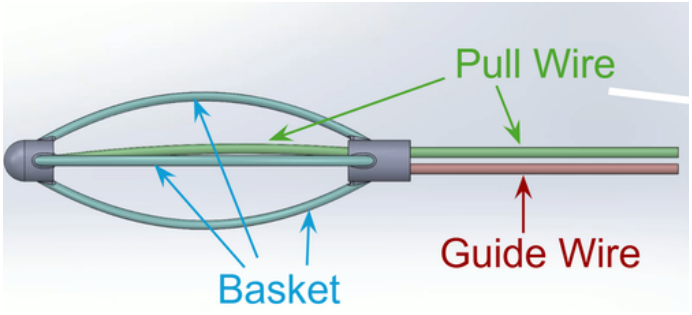

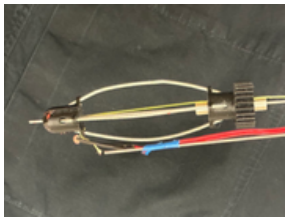

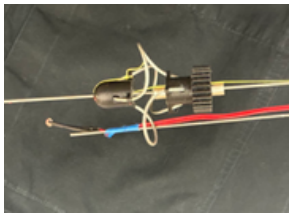

Objectives:

- Designed a morphing rotational thrombectomy basket to adapt to variable vessel diameters and avoid tool switching
- Reduced procedure time by addressing limitations of existing fixed-profile systems
- Added clot localization / clearance feedback using an optical sensor to reduce reliance on angiography

Process:

- Identified key pain points (fixed basket diameter + angiogram dependency) and translated them into design requirements
- Designed the morphing basket mechanism and built the prototype
- Integrated a photoresistor + Arduino feedback and set a detection threshold using a clot proxy
- Characterized pull-to-expansion behavior and validated clot fragmentation in mock trials
- Presented findings at the Jacob Winter 2025 Design Showcase, UC Berkeley

GYROSCOPIC GLOVE FOR HAND TREMORS - UC BERKELEY *Sep. 2025 - Jan. 2026*

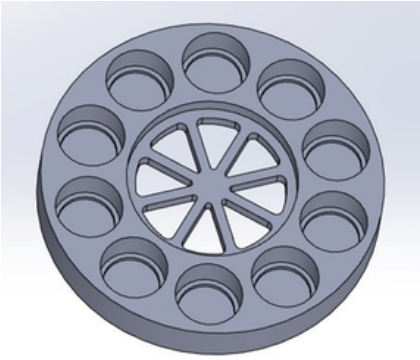

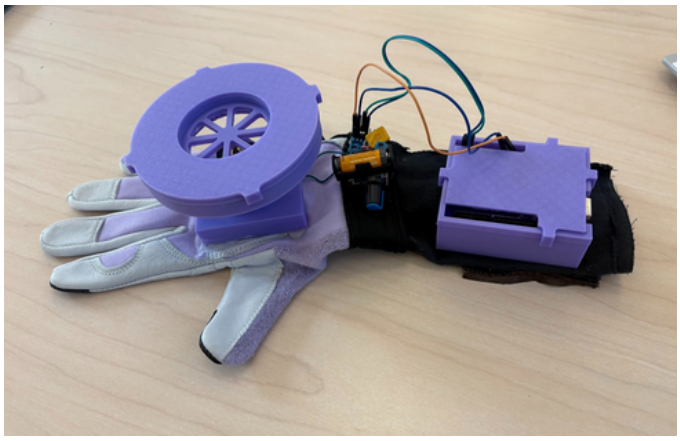

Objectives:

- Designed a glove-based concept to mitigate wrist/hand tremors while preserving functional movement for everyday use
- Prioritized wearability (comfort, ease of donning/doffing, practicality in real settings)
- Selected a concept balancing effectiveness and usability, leading to a gyroscope-based solution

Process:

- Conducted stakeholder interviews to identify user needs, enhancing communication efficiency
- Led collaborative ideation phase, applied problem-solving and design thinking skills, resulting in gyroscopic stabilization
- Performed iterative prototype development, refining gyroscope parameters: motor, weight, materials

Maxime Hache

MECHANICAL ENGINEER PORTFOLIO

PENALTY KICK ROBOT - UC BERKELEY *Sep. 2025 - Jan. 2026*

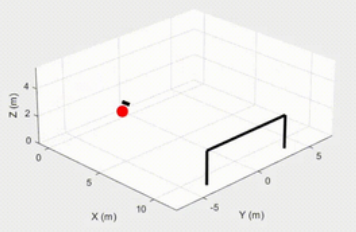

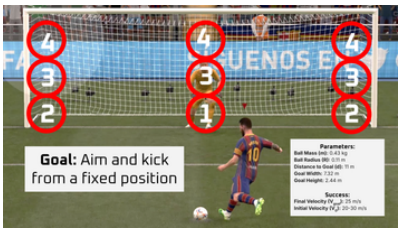

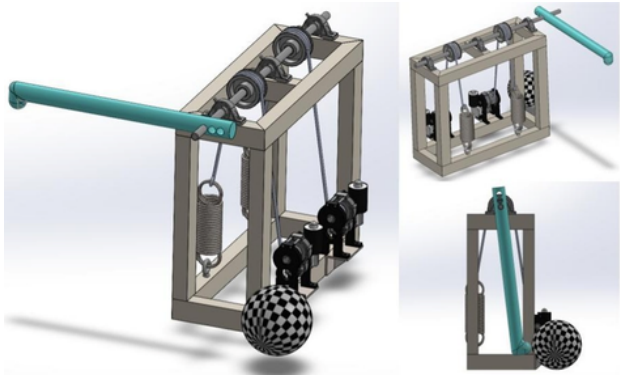

Objectives:

- Repurposed a field-goal kicking robot concept for soccer penalty kicks, focusing on precision rather than power
- Met professional penalty performance targets (time to goal / speed)
- Extended the study from a straight kick to corner shots

Process:

- Defined the kicking mechanism concept and main performance requirements (target ball speed, contact time, shot scenarios)
- Sized the leg geometry and spring actuation using analytical calculations (energy model / Hooke's law)
- Built a MATLAB model to validate the equations and predict leg swing + ball trajectory
- Modeled and validated the design in SolidWorks Motion Study for straight and corner shots

POLYMER SPEAKER- ENSAM PARIS *Jan. 2025 - May. 2025*

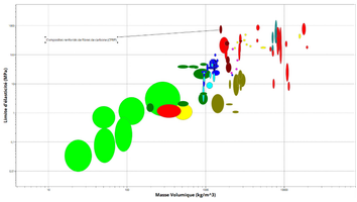

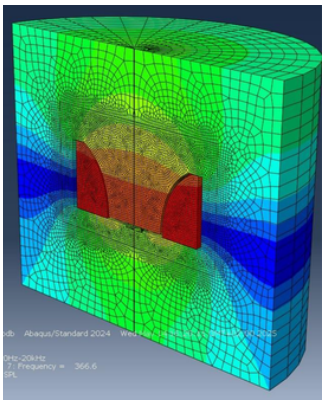

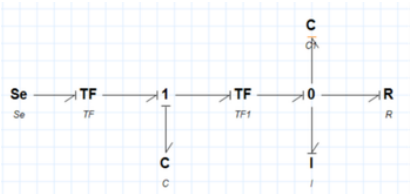

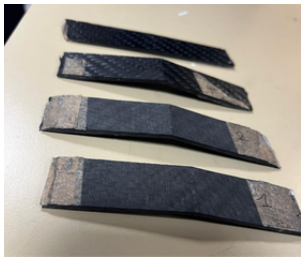

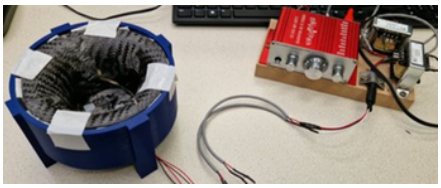

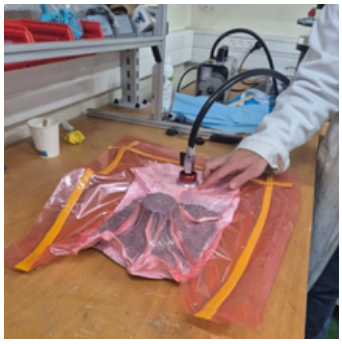

Objectives:

- Demonstrated the feasibility and performance of a lightweight, compact piezoelectric-composite loudspeaker
- Generated the key data needed to model to predict the final system's behavior

Process:

- Designed the speaker geometry to meet packaging constraints
- Selected carbon-fiber composite + PLA and validated mass-ratio trade-offs
- Built a multi-physics Bond Graph model in 20-sim to tune key electro-mech-acoustic parameters
- Designed and 3D-printed the mold and enclosure using polypropylene
- Manufactured the composite membrane via manual impregnation + vacuum bagging
- Characterized material and acoustic performance and compared with simulation

Maxime Hache

MECHANICAL ENGINEER PORTFOLIO

CORKING MACHINE - ENSAM PARIS *Jan. 2025 - May. 2025*

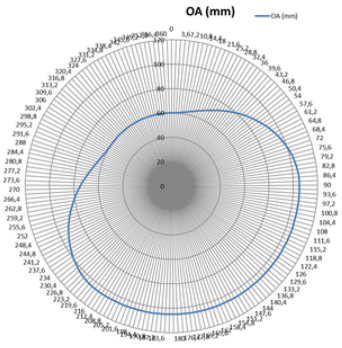

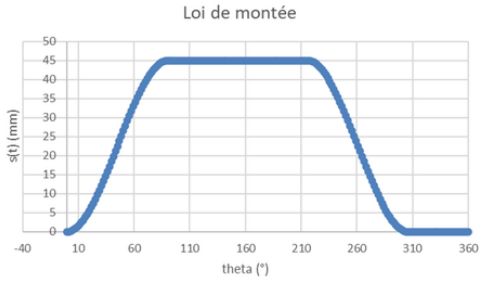

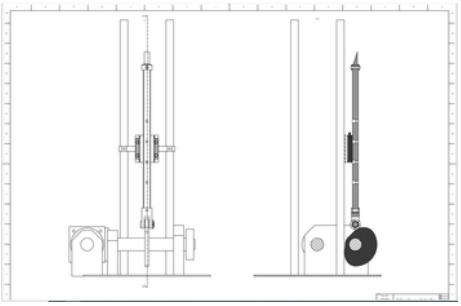

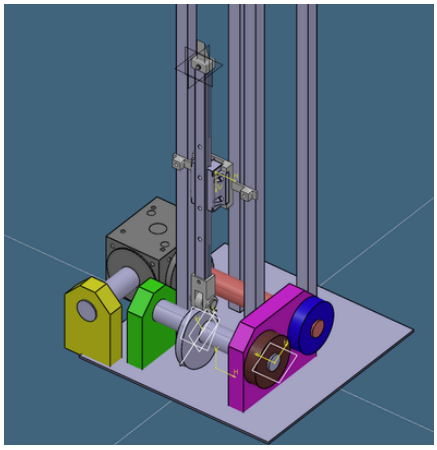

Objectives:

- Designed a new cam profile to meet the target cycle time and cork compression requirements
- Worked within existing machine constraints (no modification of key corking components)
- Validated the cam-driven mechanism and delivered the final design

Process:

- Defined the specifications and cycle time; chose the motion law and timing diagram
- Dimensioned and plotted the new cam profile using Excel
- Verified key criteria (non-interference, no lift-off, Hertz contact pressure)
- Selected the motor + gearbox and finalized CAD/technical drawings

HYDRAULIC TURBINE - ENSAM PARIS *Sep. 2024 - Jan. 2025*

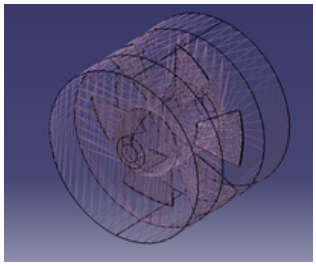

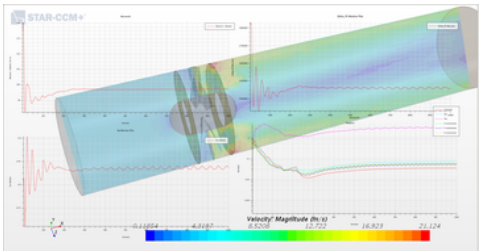

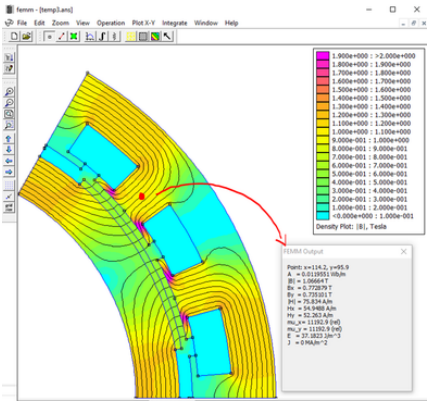

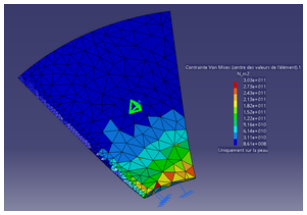

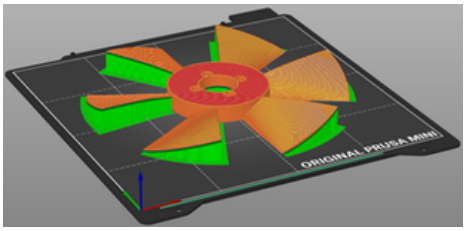

Objectives:

- Designed a turbine for hydraulic energy recovery
- Simulated the system's performance and 3D-printed the prototype to test it
- Compared different models to find the most efficient turbine

Process:

- Used MATLAB to determine how many blades are necessary and dimension them
- Designed the turbine blades and axis on CATIA V5
- Modeled the fluid volume for flow studies on STARCCM+
- Used FEMM to pre-dimension a permanent magnet synchronous machine (PMSM)

Maxime Hache

MECHANICAL ENGINEER PORTFOLIO

LIGHT AIRCRAFT BRAKING SYSTEM - ENSAM PARIS

Sep. 2024 - Jan. 2025

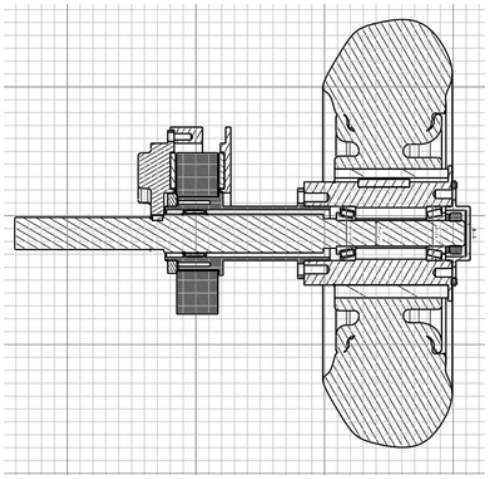

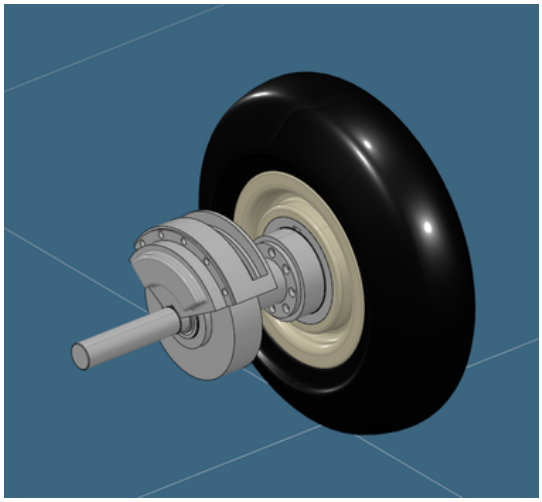

Objectives:

- Studied forces and torques applied on the system
- Designed a pneumatic disc brake on 3DEXPERIENCE and CATIA V5

Process:

Deliverables according to the approach:

- Scope (specifications, components)
- Pre-sizing (stress calculations, forces on bearings)
- System sketches CAD on 3DEXPERIENCE and CATIA V5

TREBUCHET - ENSAM LILLE

Jan. 2024 - May. 2024

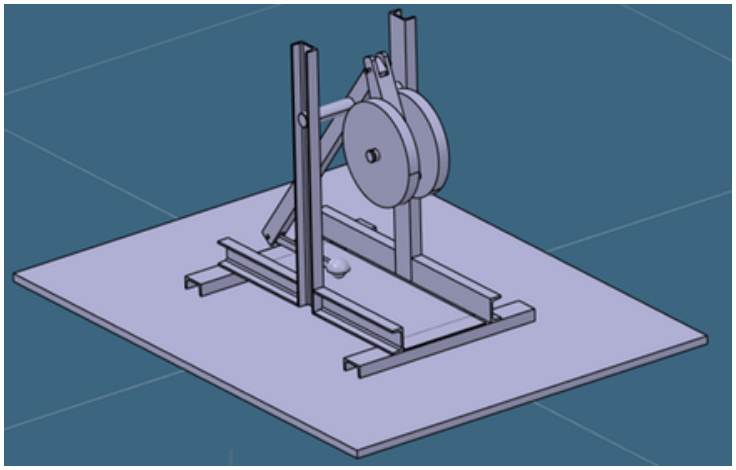

Process:

- Establishment of equations of motion on Python
- Designed the trebuchet on 3DEXPERIENCE
- Machined the different parts (turning, milling)
- Ran tests outdoors

Objectives:

- Understood how the weapon works (general dynamics, different firing phases, optimization parameters)
- Pre-studied of projectile trajectory in point mechanics
- Used of 3DEXPERIENCE multi-body dynamic simulation tools
- Manufactured of the trebuchet using resources available in the workshops

Maxime Hache

MECHANICAL ENGINEER PORTFOLIO

AI CLASSIFICATION PROJECT - ENSAM LILLE *Sep. 2023 - Jan. 2024*

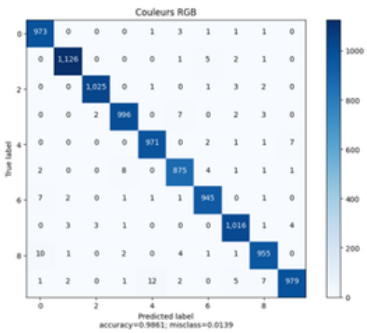

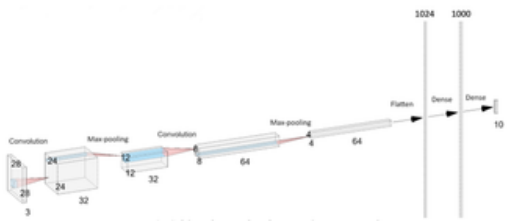

Process:

- Ran test with the same type of dataset_train and dataset_test to validate the algorithm
- Ran tests with inversion of colors & untrained colors
- Classification of colors
- Redid the whole study after setting the model in grayscale

Objectives:

- Coded a classification of images of numbers with AI
- Studied and understood the variations of the model with parameter changes

ACTIVE NOISE REDUCTION IN CLOSED CAVITY - NEWTON INSTITUTE *Jan. 2023 - Jun. 2023*

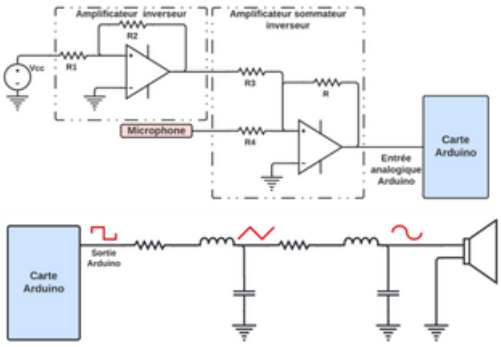

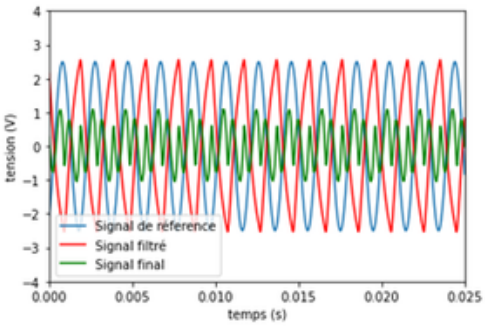

Objectives:

- Created a system of active noise cancellation
- Studied signal analysis and Arduino coding language

Process:

- Created an ADC
- Created and received signals and adapted their phase

DRONE BY THRUST AXIS - NEWTON INSTITUTE *Jan. 2022 - Jun. 2022*

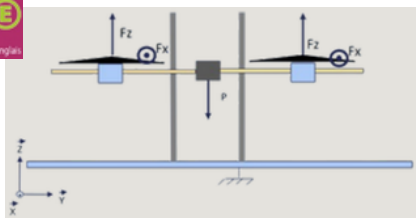

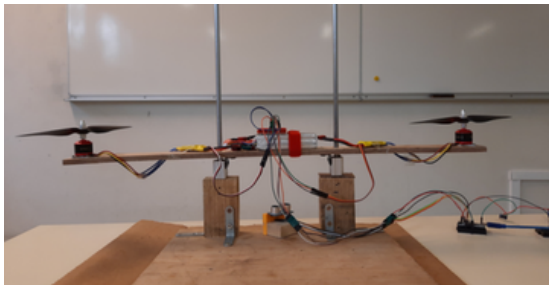

Objectives:

Designed and implemented a precise vertical positioning control system for a drone

Process:

- Built a brushless motor model with PyMecavideo; designed a closed-loop control using Scilab/Xcos.
- Integrated a phase lead controller using Bode diagram and ran simulations on Scilab.
- Achieved stable altitude control, meeting accuracy (<5% error) and response