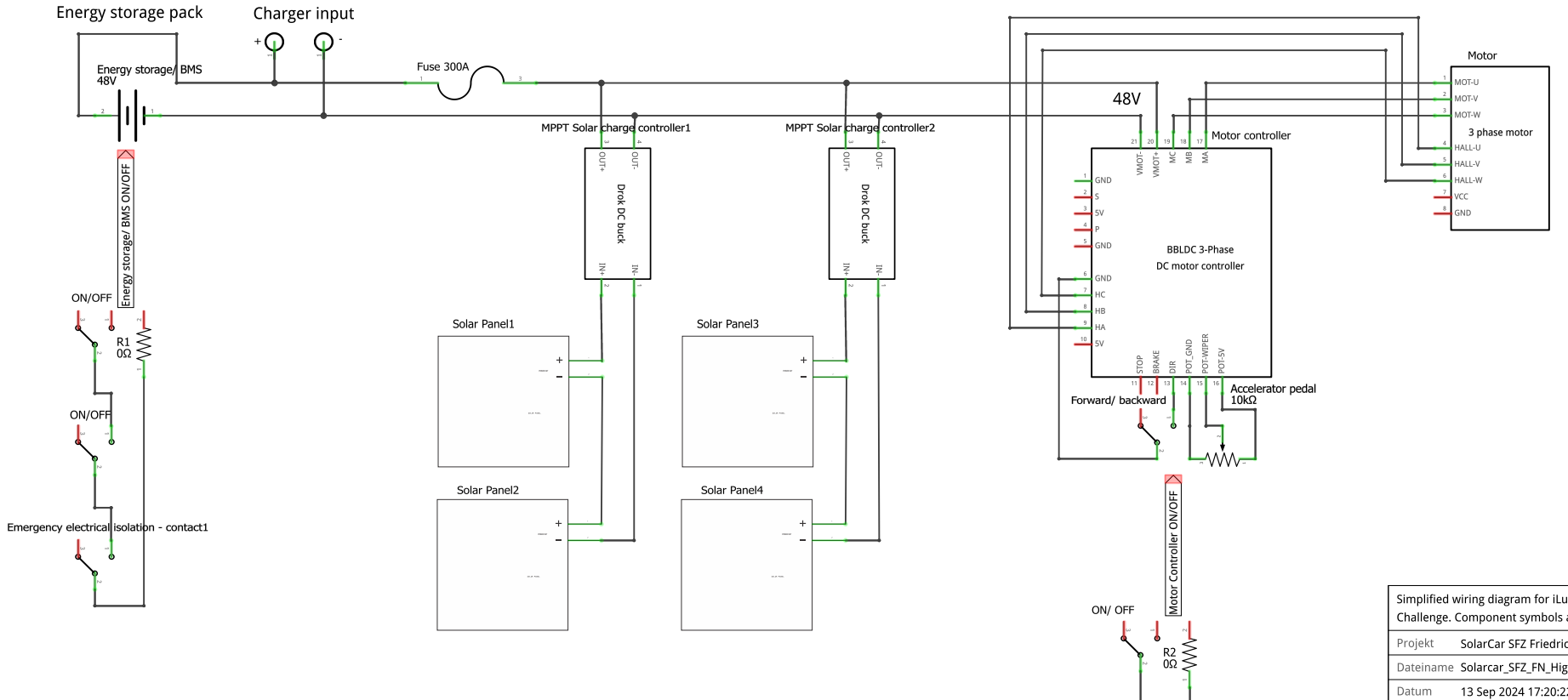

Simplified wiring diagram for iLumen European Solar Challenge. Component symbols are valid.			
Projekt	SolarCar SFZ Friedrichshafen		
Dateiname	Solarcar_SFZ_FN_High_Current.fzz	Revision	
Datum	13 Sep 2024 17:20:22	Blatt	2/2

fritzing