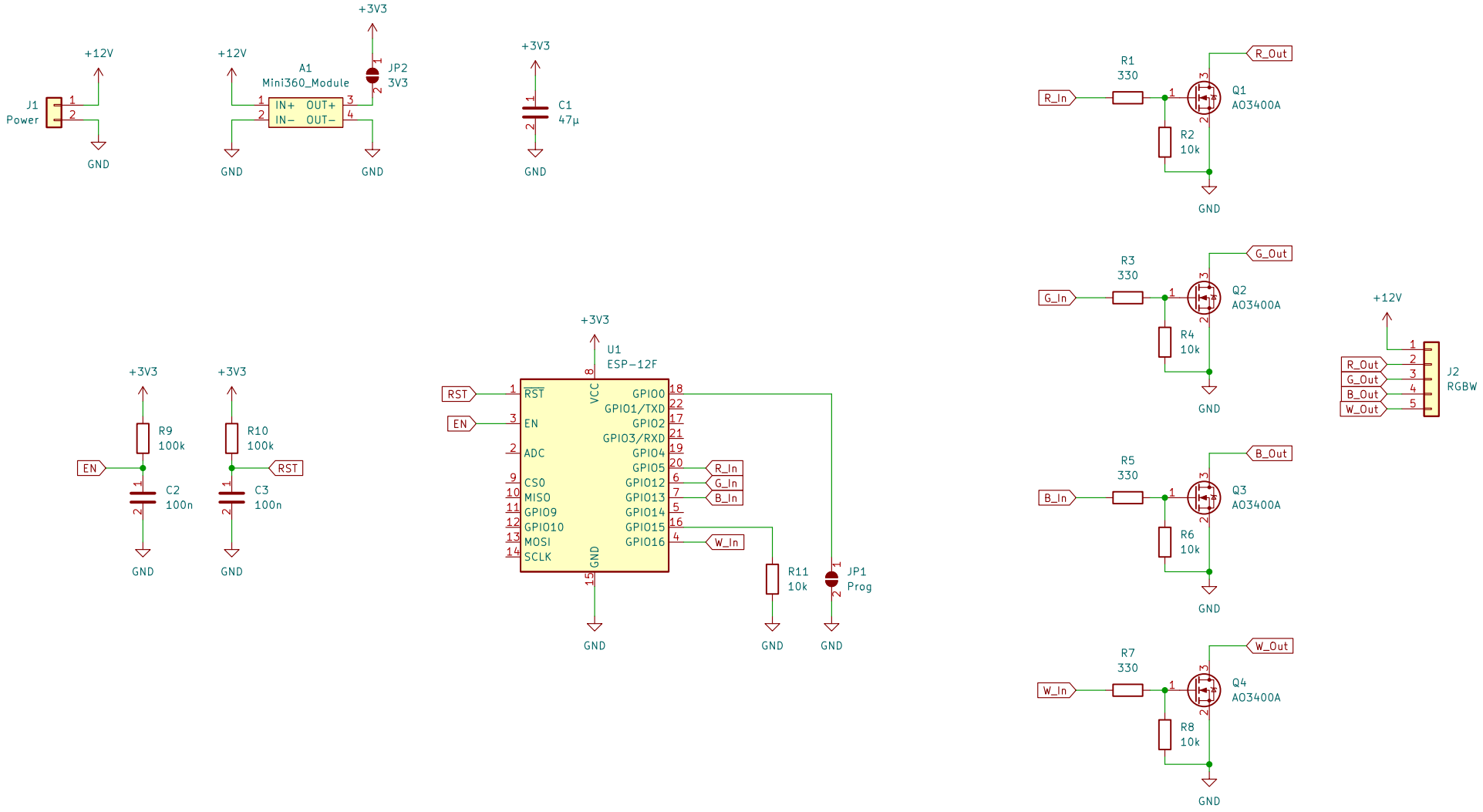

maxl95

Sheet: /
File: RGBW−Controller.kicad_sch

Title: RGBW−Controller

Size: A4	Date: 11.01.2022	Rev: V2.0
KiCad E.D.A. kicad (6.0.0)		Id: 1/1