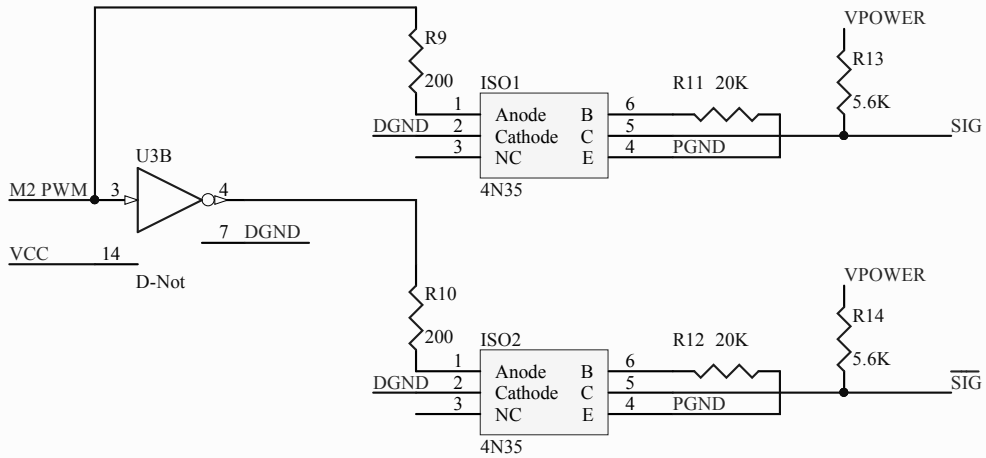

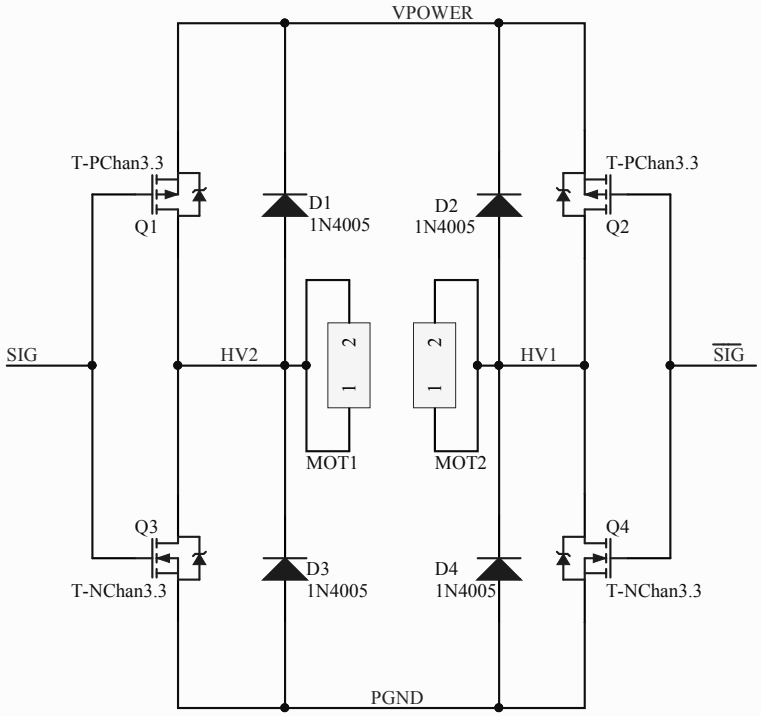

Title EECE 380 Current Driver		
Size A	Number	Revision 2
Date: 4/9/2015		Sheet of
File: C:\Users\..\currentDriver.SchDoc		Drawn By: