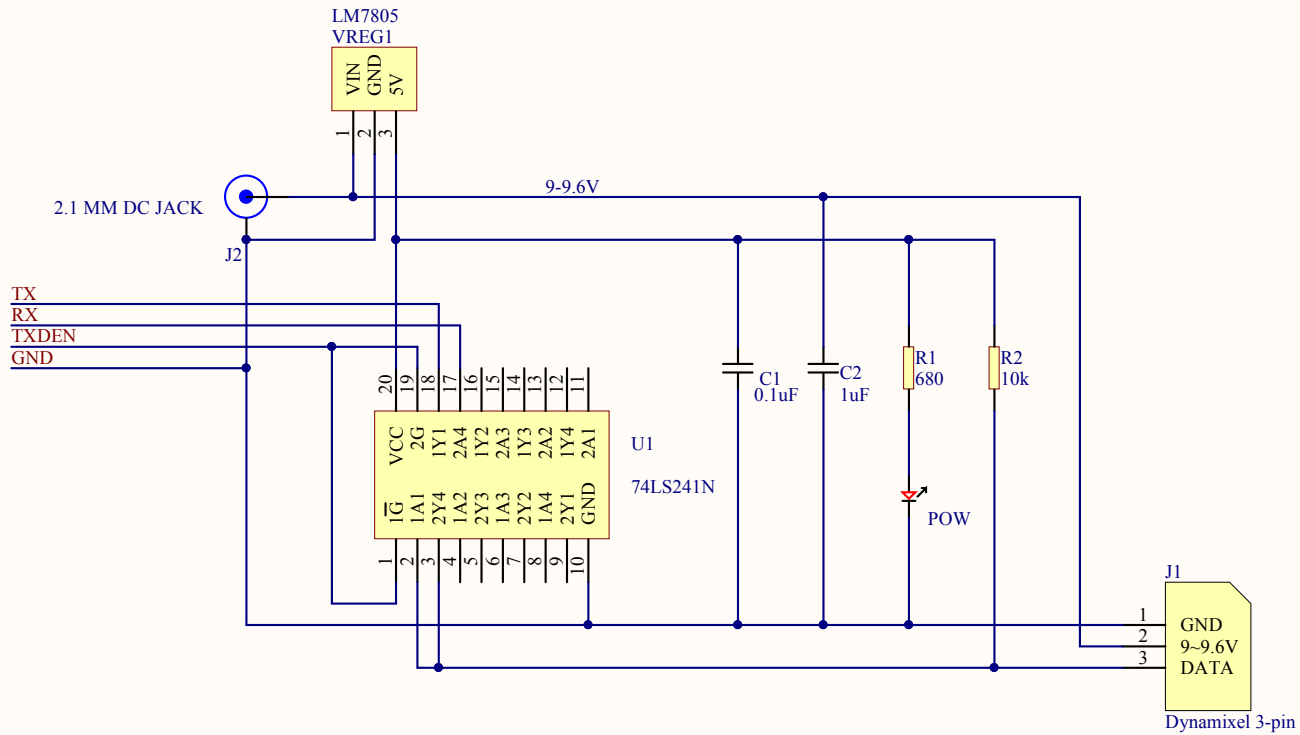

Title	Dynamixel AX-series TTL serial to one-wire adaptor	
Size A	Number	Revision 1
Date: 9/12/2015		Sheet of
File: C:\Users\..\Dynamixel AX adaptor.SchDoc		Drawn By: max.prokopenko@gmail.com