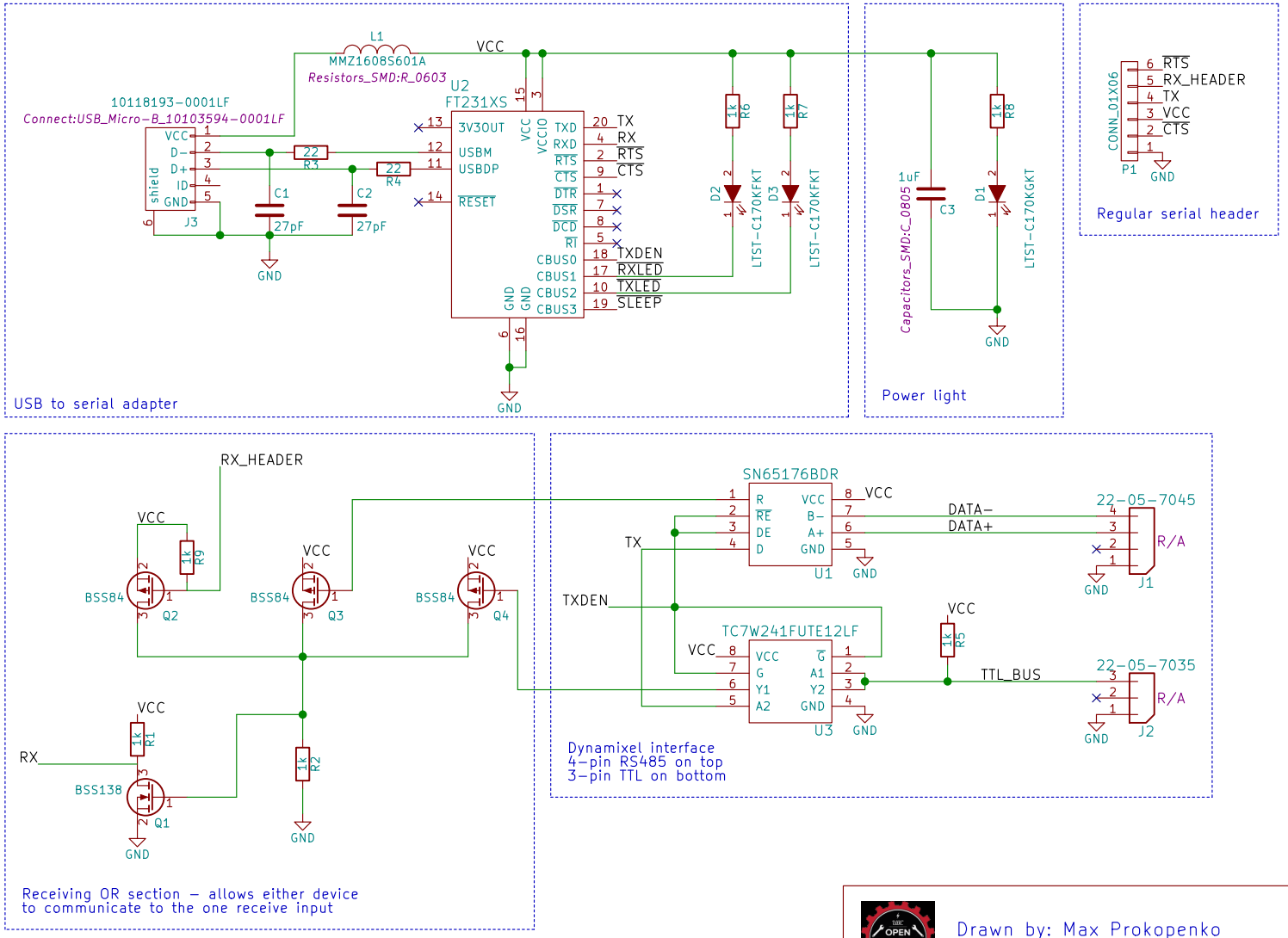

Drawn by: Max Prokopenko
max.prokopenko@gmail.com

Sheet: /
File: Rs485_interface_driver.sch

Title: RS485 and TTL bus to USB interface

Size: A4	Date: November 25th, 2015	Rev: 1
KiCad E.D.A. kicad 4.0.1-stable		Id: 1/1