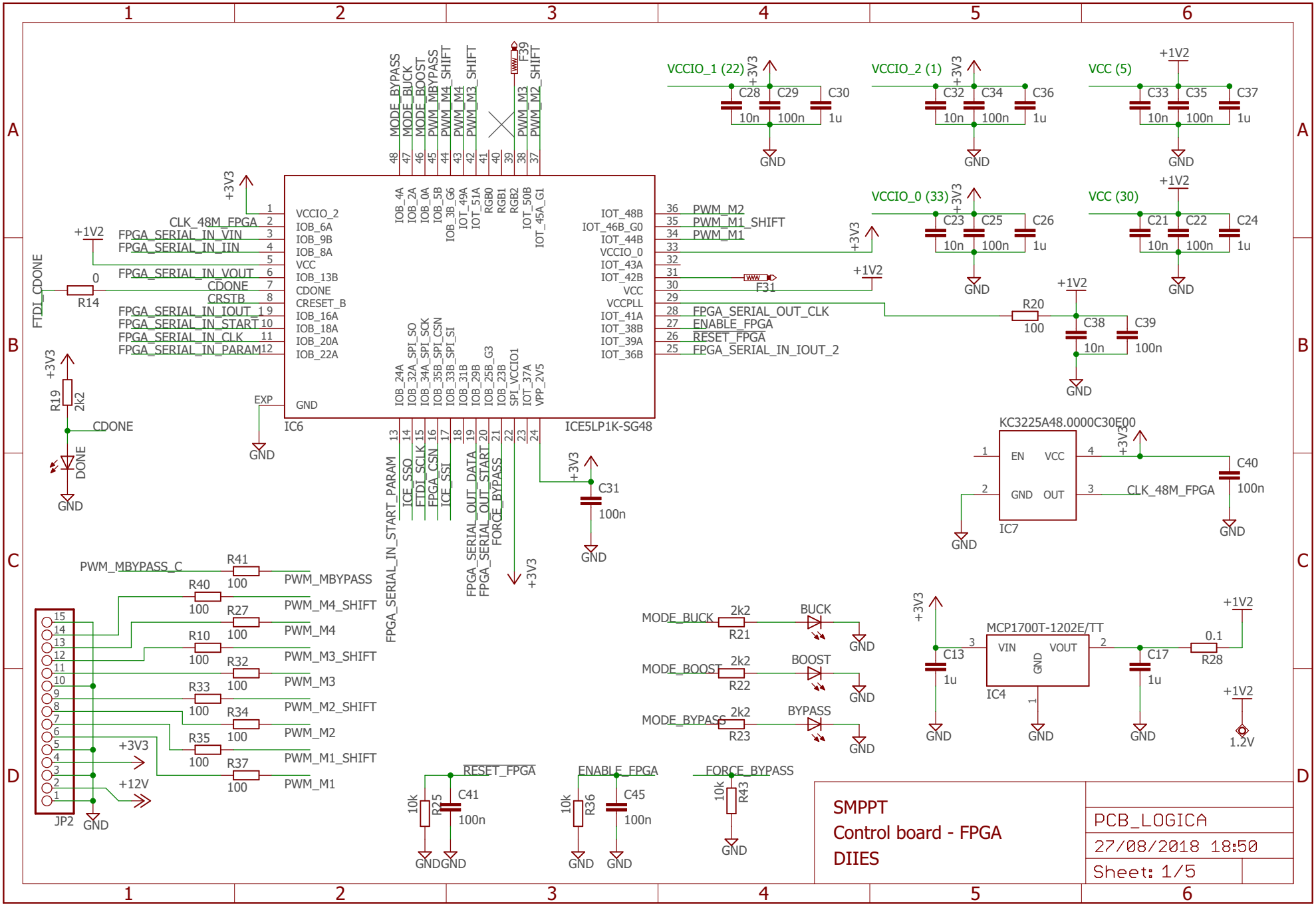
IC6
ICE5LP1K-SG48
VCCIO_2
IOB_6A
IOB_9B
IOB_8A
VCC
IOB_13B
CDONE
CRESET_B
IOB_16A
IOB_18A
IOB_20A
IOB_22A
GND
EXP
IOB_4A
IOB_2A
IOB_0A
IOB_5B
IOB_3B_G6
IOT_49A
IOT_51A
RGB0
RGB1
RGB2
IOT_50B
IOT_45A_G1
IOB_24A
IOB_32A_SPI_SO
IOB_34A_SPI_SCK
IOB_35B_SPI_CSN
IOB_33B_SPI_SI
IOB_31B
IOB_29B
IOB_25B_G3
IOB_23B
SPI_VCCIO1
IOT_37A
VPP_2V5
IOT_48B
IOT_46B_G0
IOT_44B
VCCIO_0
IOT_43A
IOT_42B
VCC
VCCPLL
IOT_41A
IOT_38B
IOT_39A
IOT_36B
CLK_48M_FPGA
FPGA_SERIAL_IN_VIN
FPGA_SERIAL_IN_IIN
FPGA_SERIAL_IN_VOUT
CDONE
CRSTB
FPGA_SERIAL_IN_IOUT_1
FPGA_SERIAL_IN_START
FPGA_SERIAL_IN_CLK
FPGA_SERIAL_IN_PARAM
PWM_M2
PWM_M1_SHIFT
PWM_M1
FPGA_SERIAL_OUT_CLK
ENABLE_FPGA
RESET_FPGA
FPGA_SERIAL_IN_IOUT_2
MODE_BYPASS
MODE_BUCK
MODE_BOOST
PWM_MBYPASS
PWM_M4_SHIFT
PWM_M4
PWM_M3_SHIFT
PWM_M3
PWM_M2_SHIFT
PWM_M2
PWM_M1_SHIFT
PWM_M1
FPGA_SERIAL_IN_START_PARAM
ICE_SSO
FTDI_SCLK
FPGA_CSN
ICE_SSI
FPGA_SERIAL_OUT_DATA
FPGA_SERIAL_OUT_START
FORCE_BYPASS
F39
F31
VCCIO_1 (22)
VCCIO_2 (1)
VCC (5)
VCCIO_0 (33)
VCC (30)
+3V3
+1V2
C28 10n
C29 100n
C30 1u
C32 10n
C34 100n
C36 1u
C33 10n
C35 100n
C37 1u
C23 10n
C25 100n
C26 1u
C21 10n
C22 100n
C24 1u
R20 100
C38 10n
C39 100n
C31 100n
KC3225A48.0000C30E00
IC7
EN
VCC
GND
OUT
C40 100n
CLK_48M_FPGA
FTDI_CDONE
R14 0
R19 2k2
CDONE
DONE
PWM_MBYPASS_C
R41 100
R40 100
R27 100
R10 100
R32 100
R33 100
R34 100
R35 100
R37 100
JP2
+12V
MODE_BUCK
MODE_BOOST
MODE_BYPASS
R21 2k2
R22 2k2
R23 2k2
BUCK
BOOST
BYPASS
MCP1700T-1202E/TT
IC4
VIN
VOUT
C13 1u
C17 1u
R28 0.1
1.2V
RESET_FPGA
ENABLE_FPGA
FORCE_BYPASS
R25 10k
C41 100n
R36 10k
C45 100n
R43 10k
SMPPT
Control board - FPGA
DIIES
PCB_LOGICA
27/08/2018 18:50
Sheet: 1/5

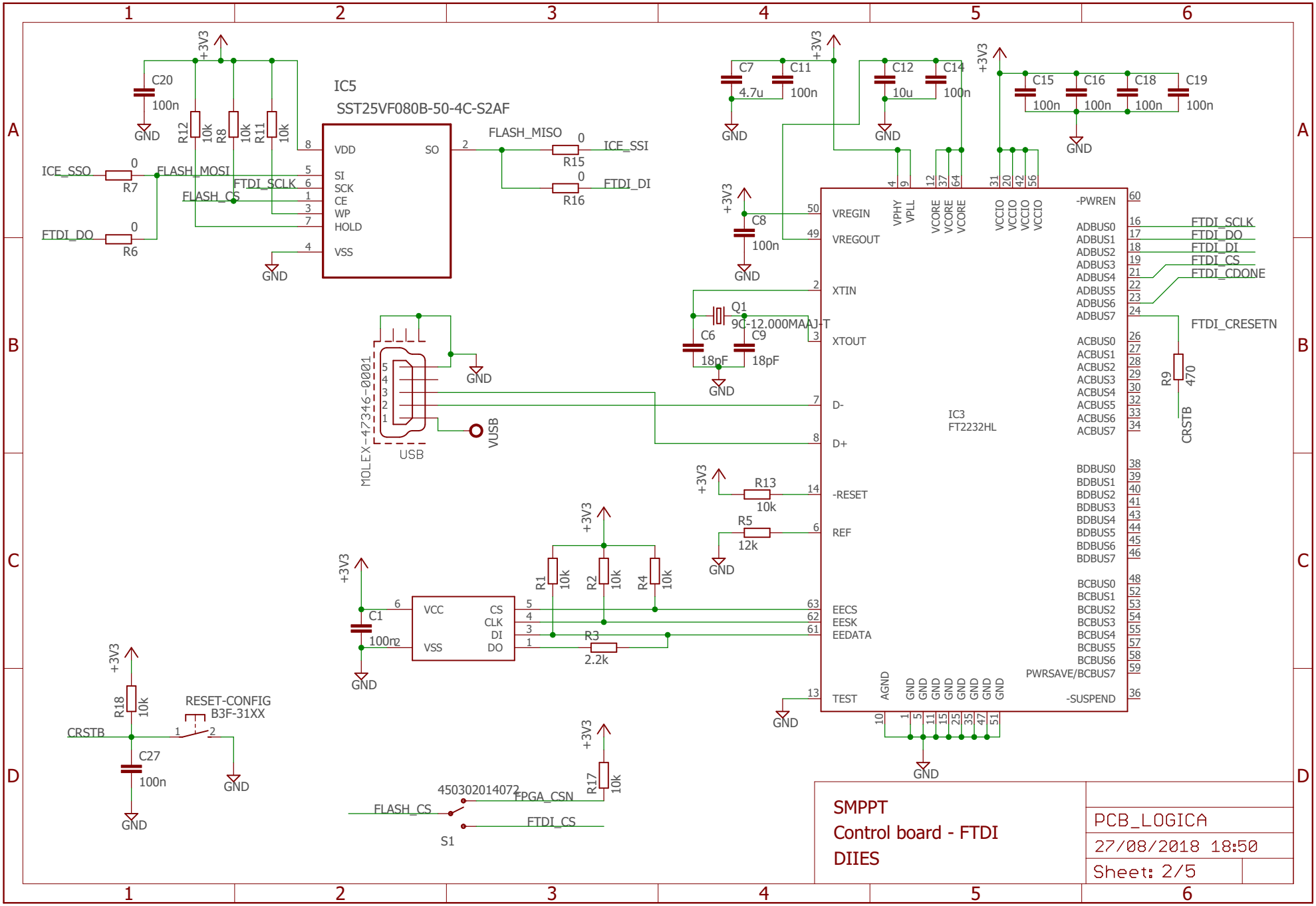
IC5
SST25VF080B-50-4C-S2AF
VDD
SO
SI
SCK
CE
WP
HOLD
VSS
FLASH_MISO
FLASH_MOSI
FTDI_SCLK
FLASH_CS
ICE_SSO
FTDI_DO
ICE_SSI
FTDI_DI
R7
R6
R15
R16
R12
R8
R11
C20
100n
+3V3
GND
C7
4.7u
C11
100n
C12
10u
C14
100n
C15
C16
C18
C19
C8
Q1
9C-12.000MAAJ-T
C6
C9
18pF
USB
MOLEX-47346-0001
VUSB
IC3
FT2232HL
VREGIN
VREGOUT
XTIN
XTOUT
D-
D+
-RESET
REF
EECS
EESK
EEDATA
TEST
-PWREN
ADBUS0
ADBUS1
ADBUS2
ADBUS3
ADBUS4
ADBUS5
ADBUS6
ADBUS7
ACBUS0
ACBUS1
ACBUS2
ACBUS3
ACBUS4
ACBUS5
ACBUS6
ACBUS7
BDBUS0
BDBUS1
BDBUS2
BDBUS3
BDBUS4
BDBUS5
BDBUS6
BDBUS7
BCBUS0
BCBUS1
BCBUS2
BCBUS3
BCBUS4
BCBUS5
BCBUS6
PWRSAVE/BCBUS7
-SUSPEND
FTDI_SCLK
FTDI_DO
FTDI_DI
FTDI_CS
FTDI_CDONE
FTDI_CRESETN
R9
470
CRSTB
R13
10k
R5
12k
R1
R2
R4
R3
2.2k
C1
100n
VCC
VSS
CS
CLK
DI
DO
R18
RESET-CONFIG
B3F-31XX
C27
R17
450302014072
FPGA_CSN
S1
SMPPT
Control board - FTDI
DIIES
PCB_LOGICA
27/08/2018 18:50
Sheet: 2/5

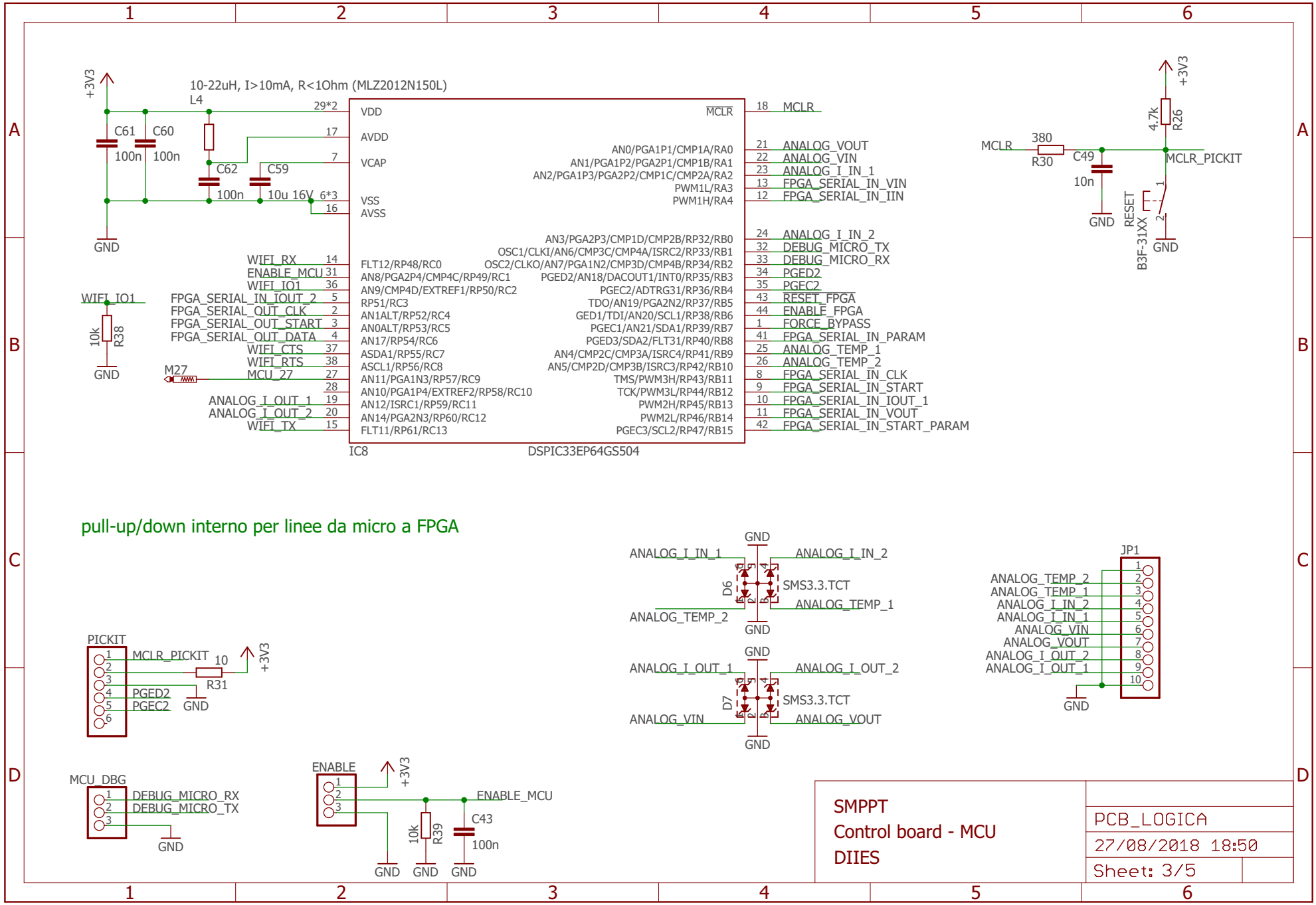
10-22uH, I>10mA, R<1Ohm (MLZ2012N150L)
L4
+3V3
C61 100n
C60 100n
C62 100n
C59 10u 16V
GND
VDD
AVDD
VCAP
VSS
AVSS
MCLR
AN0/PGA1P1/CMP1A/RA0
AN1/PGA1P2/PGA2P1/CMP1B/RA1
AN2/PGA1P3/PGA2P2/CMP1C/CMP2A/RA2
PWM1L/RA3
PWM1H/RA4
AN3/PGA2P3/CMP1D/CMP2B/RP32/RB0
OSC1/CLKI/AN6/CMP3C/CMP4A/ISRC2/RP33/RB1
OSC2/CLKO/AN7/PGA1N2/CMP3D/CMP4B/RP34/RB2
FLT12/RP48/RC0
AN8/PGA2P4/CMP4C/RP49/RC1
AN9/CMP4D/EXTREF1/RP50/RC2
RP51/RC3
AN1ALT/RP52/RC4
AN0ALT/RP53/RC5
AN17/RP54/RC6
ASDA1/RP55/RC7
ASCL1/RP56/RC8
AN11/PGA1N3/RP57/RC9
AN10/PGA1P4/EXTREF2/RP58/RC10
AN12/ISRC1/RP59/RC11
AN14/PGA2N3/RP60/RC12
FLT11/RP61/RC13
PGED2/AN18/DACOUT1/INT0/RP35/RB3
PGEC2/ADTRG31/RP36/RB4
TDO/AN19/PGA2N2/RP37/RB5
GED1/TDI/AN20/SCL1/RP38/RB6
PGEC1/AN21/SDA1/RP39/RB7
PGED3/SDA2/FLT31/RP40/RB8
AN4/CMP2C/CMP3A/ISRC4/RP41/RB9
AN5/CMP2D/CMP3B/ISRC3/RP42/RB10
TMS/PWM3H/RP43/RB11
TCK/PWM3L/RP44/RB12
PWM2H/RP45/RB13
PWM2L/RP46/RB14
PGEC3/SCL2/RP47/RB15
IC8
DSPIC33EP64GS504
MCLR
ANALOG_VOUT
ANALOG_VIN
ANALOG_I_IN_1
FPGA_SERIAL_IN_VIN
FPGA_SERIAL_IN_IIN
ANALOG_I_IN_2
DEBUG_MICRO_TX
DEBUG_MICRO_RX
PGED2
PGEC2
RESET_FPGA
ENABLE_FPGA
FORCE_BYPASS
FPGA_SERIAL_IN_PARAM
ANALOG_TEMP_1
ANALOG_TEMP_2
FPGA_SERIAL_IN_CLK
FPGA_SERIAL_IN_START
FPGA_SERIAL_IN_IOUT_1
FPGA_SERIAL_IN_VOUT
FPGA_SERIAL_IN_START_PARAM
WIFI_RX
ENABLE_MCU
WIFI_IO1
FPGA_SERIAL_IN_IOUT_2
FPGA_SERIAL_OUT_CLK
FPGA_SERIAL_OUT_START
FPGA_SERIAL_OUT_DATA
WIFI_CTS
WIFI_RTS
MCU_27
ANALOG_I_OUT_1
ANALOG_I_OUT_2
WIFI_TX
10k R38
M27
MCLR 380 R30
C49 10n
4.7k R26
MCLR_PICKIT
RESET
B3F-31XX
pull-up/down interno per linee da micro a FPGA
D6 SMS3.3.TCT
ANALOG_I_IN_1
ANALOG_I_IN_2
ANALOG_TEMP_2
ANALOG_TEMP_1
D7 SMS3.3.TCT
ANALOG_I_OUT_1
ANALOG_I_OUT_2
ANALOG_VIN
ANALOG_VOUT
JP1
ANALOG_TEMP_2
ANALOG_TEMP_1
ANALOG_I_IN_2
ANALOG_I_IN_1
ANALOG_VIN
ANALOG_VOUT
ANALOG_I_OUT_2
ANALOG_I_OUT_1
PICKIT
MCLR_PICKIT
10 R31
PGED2
PGEC2
MCU_DBG
DEBUG_MICRO_RX
DEBUG_MICRO_TX
ENABLE
ENABLE_MCU
10k R39
C43 100n
SMPPT
Control board - MCU
DIIES
PCB_LOGICA
27/08/2018 18:50
Sheet: 3/5

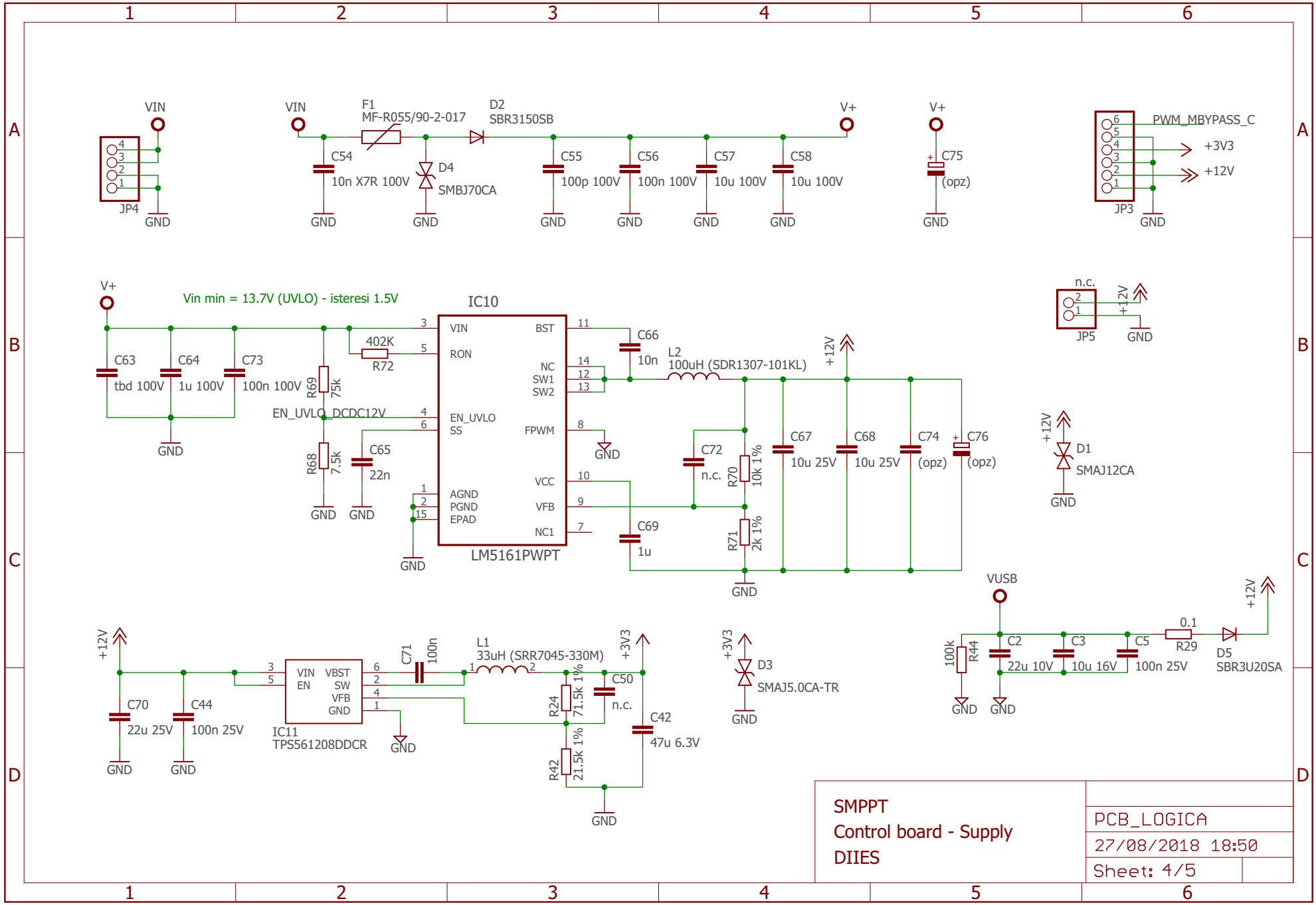
VIN
JP4
GND
VIN
F1
MF-R055/90-2-017
D2
SBR3150SB
V+
C54
10n X7R 100V
D4
SMBJ70CA
C55
100p 100V
C56
100n 100V
C57
10u 100V
C58
10u 100V
V+
C75
(opz)
PWM_MBYPASS_C
+3V3
+12V
JP3
V+
Vin min = 13.7V (UVLO) - isteresi 1.5V
IC10
C63
tbd 100V
C64
1u 100V
C73
100n 100V
R69
75k
402K
R72
EN_UVLO_DCDC12V
R68
7.5k
C65
22n
VIN
RON
EN_UVLO
SS
AGND
PGND
EPAD
BST
NC
SW1
SW2
FPWM
VCC
VFB
NC1
LM5161PWPT
C66
10n
L2
100uH (SDR1307-101KL)
+12V
C72
n.c.
R70
10k 1%
R71
2k 1%
C69
1u
C67
10u 25V
C68
10u 25V
C74
(opz)
C76
(opz)
n.c.
JP5
+12V
D1
SMAJ12CA
+12V
C70
22u 25V
C44
100n 25V
IC11
TPS561208DDCR
VIN
EN
VBST
SW
VFB
GND
C71
100n
L1
33uH (SRR7045-330M)
+3V3
R24
71.5k 1%
C50
n.c.
R42
21.5k 1%
C42
47u 6.3V
+3V3
D3
SMAJ5.0CA-TR
VUSB
100k
R44
C2
22u 10V
C3
10u 16V
C5
100n 25V
0.1
R29
D5
SBR3U20SA
+12V
SMPPT
Control board - Supply
DIIES
PCB_LOGICA
27/08/2018 18:50
Sheet: 4/5

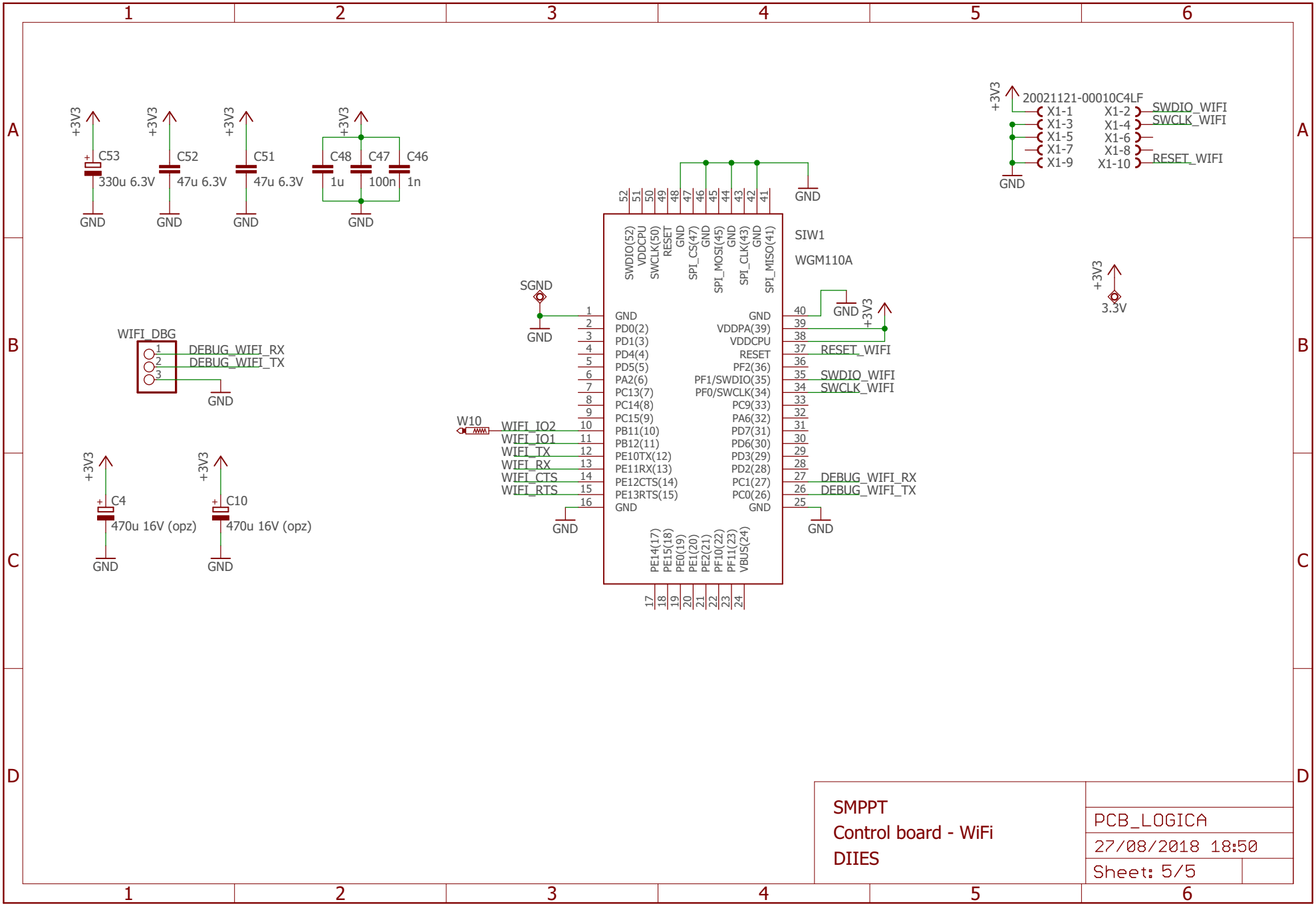
+3V3
C53
330u 6.3V
GND
C52
47u 6.3V
C51
47u 6.3V
C48
1u
C47
100n
C46
1n
20021121-00010C4LF
X1-1
X1-3
X1-5
X1-7
X1-9
X1-2
X1-4
X1-6
X1-8
X1-10
SWDIO_WIFI
SWCLK_WIFI
RESET_WIFI
SIW1
WGM110A
SWDIO(52)
VDDCPU
SWCLK(50)
RESET
SPI_CS(47)
SPI_MOSI(45)
SPI_CLK(43)
SPI_MISO(41)
PE14(17)
PE15(18)
PE0(19)
PE1(20)
PE2(21)
PF10(22)
PF11(23)
VBUS(24)
GND
PD0(2)
PD1(3)
PD4(4)
PD5(5)
PA2(6)
PC13(7)
PC14(8)
PC15(9)
PB11(10)
PB12(11)
PE10TX(12)
PE11RX(13)
PE12CTS(14)
PE13RTS(15)
VDDPA(39)
PF2(36)
PF1/SWDIO(35)
PF0/SWCLK(34)
PC9(33)
PA6(32)
PD7(31)
PD6(30)
PD3(29)
PD2(28)
PC1(27)
PC0(26)
SGND
W10
WIFI_IO2
WIFI_IO1
WIFI_TX
WIFI_RX
WIFI_CTS
WIFI_RTS
DEBUG_WIFI_RX
DEBUG_WIFI_TX
WIFI_DBG
C4
470u 16V (opz)
C10
470u 16V (opz)
3.3V
SMPPT
Control board - WiFi
DIIES
PCB_LOGICA
27/08/2018 18:50
Sheet: 5/5