Marine Pollution Bulletin 112 (2016) 75–85

Contents lists available at ScienceDirect

Marine Pollution Bulletin

journal homepage: www.elsevier.com/locate/marpolbul

Use of baited remote underwater video (BRUV) and motion analysis for studying the impacts of underwater noise upon free ranging fish and implications for marine energy management

Louise Roberts *, Rafael Pérez-Domínguez [1], Michael Elliott

Institute of Estuarine and Coastal Studies (IECS), University of Hull, Hull HU6 7RX, United Kingdom

ARTICLE INFO

Article history:
Received 23 February 2016
Received in revised form 15 August 2016
Accepted 18 August 2016
Available online 9 September 2016

Keywords:
Underwater noise
Marine energy
Baited underwater camera
Acoustic playback
Impulsive noise
Behaviour

ABSTRACT

Free-ranging individual fish were observed using a baited remote underwater video (BRUV) system during sound playback experiments. This paper reports on test trials exploring BRUV design parameters, image analysis and practical experimental designs. Three marine species were exposed to playback noise, provided as examples of behavioural responses to impulsive sound at 163–171 dB re 1 μPa (peak-to-peak SPL) and continuous sound of 142.7 dB re 1 μPa (RMS, SPL), exhibiting directional changes and accelerations. The methods described here indicate the efficacy of BRUV to examine behaviour of free-ranging species to noise playback, rather than using confinement. Given the increasing concern about the effects of water-borne noise, for example its inclusion within the EU Marine Strategy Framework Directive, and the lack of empirical evidence in setting thresholds, this paper discusses the use of BRUV, and short term behavioural changes, in supporting population level marine noise management.

© 2016 Elsevier Ltd. All rights reserved.

1. Introduction

The use of seabed video systems, or, remote underwater video (RUV), baited remote underwater video (BRUV) has increased notably within the last decade (e.g. Mallet and Pelletier, 2014), due to the refinement of technology leading to a reduction in camera and video processing costs. Camera systems are typically non-destructive observation methods, used in a range of habitats and depths, provide permanent records, give potential for high replication and reduce the staff and field time required for experiments (Ellis and DeMartini, 1995; Mallet and Pelletier, 2014; Shortis et al., 2007). By using two cameras which have an overlapping field of view (stereoscopic), a perception of depth can be obtained allowing the 3D co-ordinates of a subject to be calculated, making observations particularly useful for behavioural studies (first described by Harvey and Shortis, 1995).

Stereo systems have been implemented widely, for example, from estimating abundance, assemblage composition, richness and individual fish identification (Griffin et al., 2016; Langlois et al., 2010; Unsworth et al., 2014; Watson et al., 2005; Wraith et al., 2013). These have been used in a range of depths from shallow water (Unsworth et al., 2014) and natural/artificial reefs (Kemp et al., 2008; White et al., 2013; Wraith et al., 2013) to the deep sea (Cousins et al., 2013; Priede et al., 2006). Within these, bait is commonly used to attract organisms into the field of view (King et al., 2007; Stobart et al., 2007) and it is widely accepted that bait type has a significant effect on the fish assemblage attracted (Harvey et al., 2007; Løkkeborg and Bjordal, 1992; Watson et al., 2005; Wraith et al., 2013). However despite BRUV being widely used, Mallet and Pelletier (2014) found only six studies (at depths < 100 m) that used these methods to investigate the effect of human disturbance upon behaviour, and of these only one was an acoustic study (Picciulin et al., 2010). Yet there is a need to describe the behavioural responses of fish exposed to noise on both a school and an individual level (Hawkins et al., 2012).

To process video data, motion analysis software has been used increasingly for quantifying locomotory changes in animal behaviours, for example for monitoring prey-predator interactions and schooling behaviour (Kawaguchi et al., 2010; Pohlmann et al., 2001). Depending on the experimental setup, video footage available and the parameters to be calculated, programs that can track animal movement range from frame-by-frame (Abràmoff et al., 2004) to more sophisticated automatic 3D tracking programs (discussed later). Although swimming changes have been quantified for a few fish species (Domenici et al., 2004; Fuiman et al., 2010; LeFrancois et al., 2009; Weber, 2006), such software has not been used to analyse responses to sound stimuli in field conditions. Swimming parameters obtained from motion analysis

* Corresponding author.
E-mail address: Louise.Roberts@hull.ac.uk (L. Roberts).
[1] Present address: APEM Limited, Riverview, A17 Embankment Business Park, Heaton Mersey, Stockport, SK4 3GN, United Kingdom.

http://dx.doi.org/10.1016/j.marpolbul.2016.08.039
0025-326X/© 2016 Elsevier Ltd. All rights reserved.

of free swimming fish can be translated into metrics (such as percent response, response latency, angular velocity, etc.), which could be compared across noise levels and signatures.

Typical immediate behavioural responses by fishes in tanks to underwater noise stimuli include startle responses, increased speed and positional changes in the water column (Blaxter and Hoss, 1981; Engås et al., 1995; Kastelein et al., 2008). This includes the involuntary flexion of the body resulting in a rapid change of direction and speed, the 'C start' response (Blaxter and Hoss, 1981; Zottoli, 1977). Another behaviour commonly exhibited is 'milling', an increased swimming speed with random turns (Blaxter and Hoss, 1981). However, the behaviour of captured (or hatchery reared) individuals within tanks cannot be assumed to accurately reflect wild behaviour, e.g. Benhaïma et al. (2012). Confinement in tanks is likely to induce stress, and behavioural changes such as circling the tank (Kastelein et al. (2008). The solution is to film animals in the wild, but this presents logistical challenges regarding monitoring the behaviour of highly mobile species to calibrated stimuli; For this reason, many field-based studies have used cages, nets or pens (Engås et al., 1998; Engås et al., 1995; Fernandes et al., 2000; Fewtrell and McCauley, 2012; Sara et al., 2007; Schwarz and Greer, 1984). For example, during exposure to low frequency sonar (Popper et al., 2007), vibro pile-driving (Nedwell et al., 2003) and airgun arrays (Engås et al., 1996; Hassel et al., 2004; Pearson et al., 1992) key responses exhibited in such confined conditions are directional avoidance, increased speed, and variation of group density (Engås et al., 1995; Fewtrell and McCauley, 2012; Sara et al., 2007; Schwarz and Greer, 1984), varying with acoustic and environmental context. One less restrictive method is to film animals with distinct territories or nests naturally occupied during the noise exposure, eliminating the need for confinement (Picciulin et al., 2010). Another potential solution is to use an attractant to lure fish to cameras. It is of note that in many cases the presence of a camera lander is enough to warrant the attention of 'curious' fish.

Whilst behaviours observed on camera may be short lived, these may have knock-on implications for feeding, migration, reproduction and even interrupt predator-prey interactions (Chan et al., 2010; Hawkins et al., 2014b; Simpson et al., 2014). For example, the time budgets of two reef fish have been shown to be altered in response to boat noise, with time for nest caring reduced (Picciulin et al., 2010), and mussels have been shown to close the valve in response to sediment vibration which directly reduces time spent filter feeding (Roberts et al., 2015). The extent to which noise affects migratory patterns, feeding, reproduction, communication, predator-prey interactions and navigation is relatively unknown (Hawkins et al., 2014a), leading to difficulties setting noise exposure criteria for fish species and anthropogenic sources (DEFRA, 2014; Popper et al., 2014).

It is not always possible to undertake experiments near actual anthropogenic sources. Permissions are required, there are strict experimental limitations, sound regimes are unpredictable, and experiments would need to be fitted around construction timings. Playbacks of actual recorded signatures, or synthetic versions, can overcome this problem, allowing the exposure source to be fully controlled. In laboratory tanks it is difficult to play back calibrated sound stimuli accurately due to the presence of boundaries and the creation of standing waves of differing frequencies (Parvulescu, 1964a, 1964b; Rogers, 2015), as such field experiments in the acoustic free field have strong advantages over laboratory studies.

The current study aimed to investigate the behaviour of wild, unrestrained individual fish in response to playback of calibrated noise signatures. We tested the practical use of underwater cameras fitted on a purpose-built camera frame to document live behavioural responses of fishes during control exposure experiments (CEE). The combined field approach, including the deployment of a calibrated purpose-built underwater sound projector array and other technical aspects such as working in natural marine habitats with variable environmental conditions, motion analysis tracking and the use of purpose-built projector array for example, made the current work both a challenge and innovative. With this in mind the emphasis is on the techniques and methodologies employed by the work, rather than quantitative outputs.

2. Methods

A purpose-built projector array was used, consisting of four speakers as a unit, connected to an InPhase IPX2400 amplifier (2400 W) into which a signal was fed via a Tascam model DR05 sound recorder or IBM Thinkpad laptop computer (details in Hawkins et al. (2014b); Roberts (2015). The array produced source levels in the region of 186.0 dB re 1 μPa @ 1 m. Two playback signatures were used (20 s, 6 amplitudes −6 dB steps), of recorded shipping and a synthetic impulsive sound. The ship noise consisted of a twenty second recording of a large container ship, as captured by Subacoustech Ltd. during routine noise monitoring. The synthetic pile-driving stimulus consisted of 10 sharp-onset low frequency pulses, two seconds apart, constructed from white noise (50–600 Hz) to mimic spectral characteristics of pile-driving. It is of note that particle velocity (dB re 1 m s^{-1}) was not measured, but the particle velocity capabilities of the projector array are provided in Hawkins et al. (2014b), as derived from sound pressure measurements. To avoid pseudoreplication, for example when an insufficient number of recordings are used to test for a certain response (McGregor, 1992), six versions of the sound were used. Each was created with the same characteristics (i.e. onset time and filtered frequency ranges) but with a different white noise used in each case. Overall the sounds were an accurate representation of pile-driving and shipping noise in the acoustic far field, with predominant energy in the 50–600 Hz band (Supplemental material).

Recordings of 'silence' were randomly interspersed to ensure that equipment alone did not influence subjects (that is, that activation of the playback system itself did not elicit responses without added noise) referred to as control trials. Received sound levels were recorded at the camera frame using a purpose-built subsea recording pod (Subacoustech prototype 1/2) consisting of a steel pressure housing containing a miniature battery-powered amplifier and a digital recorder (Roland R-09HR or Tascam model DR05) connected to an external calibrated hydrophone (Brüel & Kjær 8105, −205 dB re 1 V/μPa ± 2 dB, 0.1 Hz–100 kHz). For synchronization of playback noise with the video footage, an additional Aquarian Audio H2a hydrophone (uncalibrated, sensitivity −180 dB re 1 V/μPa, 10 Hz–100 kHz) was connected to the video recorders on the camera frame to alert the viewer to the playback during video analysis.

A BRUV system, purpose-built to work in changeable coastal conditions (low light levels, strong currents and unpredictable deployment conditions) consisted of a large steel frame (approximately 2 m × 1 m × 1 m) of a similar design as Langlois et al. (2010) and Cappo et al. (2007), (Fig. 1). The first BRUV system had a subsea housing with two cameras and video recorders (Mini DVR III HDVR720) and necessary power supplies, allowing the unit to record audio and video signals unattended for approximately 8 h. An Internet Protocol (IP) camera was used to relay real-time footage via a wireless local network to the observer controlling the playback system (the access point was from a water-resistant housing mounted on a surface buoy, Fig. 2). Real-time observations were necessary to ensure presence of fish prior, during and after exposure. However since deployments were shore based, or to a small vessel close by, the system was then simplified to remove the subsea housing and connect the frame to the surface video recorders via an armoured umbilical cable to provide power and to export the footage. An observer could therefore use the IP camera image or video recorders for live observations of the BRUV for extended periods of time (i.e. not limited by the duration of the batteries or distance to the access points that provide the wireless link used in the first prototype).

Dropdown (rapid deployment) inspection cameras were used prior to deployment to ascertain whether visibility and bottom conditions were suitable. The position of the BRUV was adjusted until the field of

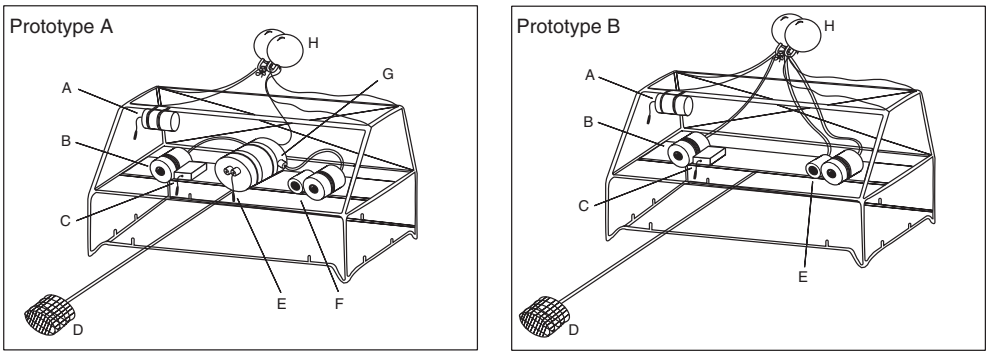

Fig. 1. Initial BRUV (Prototype A), consisting of a large steel frame equipped with two cameras and a hydrophone connected to a central subsea housing containing power and mini DVR recorders. Two remote recording pods with hydrophones recorded sound levels. A. Recording pod with Aquarian Audio hydrophone, B. stereoscopic camera (s), C. recording pod with Brüel & Kjær hydrophone, D. Bait bag, E. Aquarian audio hydrophone connected to mini DVR recorders for synchronization of video and sound. F. IP camera for live video link to surface (umbilical cable not shown). G. Subsea housing containing mini DVR recorders and power supplies, H. subsurface buoy. Second BRUV system (Prototype B) with the subsea housing removed (G), and cameras wired to the surface via an armoured umbilical cable. Figure from Roberts, 2015.

view was clear of obstructions and fishes were present. The precise time of playback (from the mini-DVR), signature played, signature level and the behavioural response (if present) were recorded per playback.

For all fieldwork deployments the BRUV was baited using a combination of fresh herring, pilchards, mackerel, lugworm, and mixed fish scraps. In addition to this, to create a large plume in the water column, effervescent bait pellets were made, containing flour, chopped fish, sunflower oil, sodium bicarbonate, citric acid, fish oils and bloodworm, as in Stobart et al. (2007). The intention of this was to attract fish into the area, rather than undertake experiments during the effervescent plume. A bait pole (approximately 1 m length) extended outwards from the camera frame into the field of view. The bait was held either in a mesh bag or attached directly to the pole itself. We did not directly test the effectiveness of the different bait types, since we were not investigating the abundances of fish species in the area, but merely needed the presence of fish for the experiments.

Tests were undertaken at a Marine Nature Reserve, Lough Hyne, Cork, Ireland, (51° 30′ N, 9° 18′ W) working from a Rigid-hull Inflatable Boat (4 m RIB unpowered during experiments) or the shore. Boat traffic and human activity is highly restricted within the reserve, hence it was a quiet place where natural sounds dominate. Further tests were undertaken in Plymouth Sound (50° 21′ N 4° 08′ W) from a fishing vessel (10 m). In both cases the sound projector array was deployed at a distance of 5–10 m from the frame, in a depth of at least 10 m to enable sufficient sound propagation and sound level (judged by received sound levels) (Fig. 3). The sound level was adjusted to be within the range produced by anthropogenic operations at distance, and was *not* meant to be representative of the sound level at 5–10 m from these. The array was deployed from the side of a small platform, or from the side of a vessel.

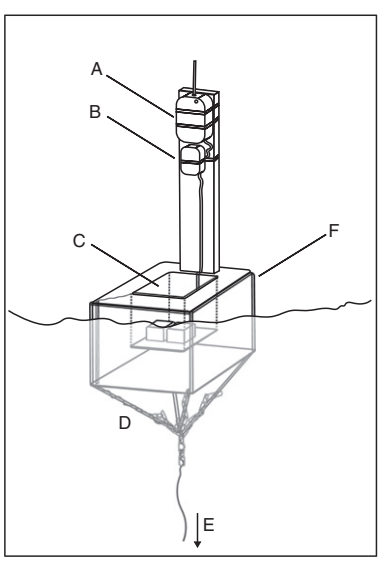

Fig. 2. Buoy built to transmit a live IP camera signal remotely to the operator station, consisting of power supply and waterproof wireless router. A. Wireless router and high power omnidirectional antena, B. Power supply, C. Pelicase containing wiring and mini DVR recorders, D. Battery supplies held inside the buoy, E. Umbilical cable attached to the BRUV on the seabed, F. Slotted steel frame containing polystyrene cube. Figure from Roberts, 2015.

The experiment could be controlled by one operator, with consultation with the mini-DVR footage and randomised selection of the playback signatures in the form of pre-selected playlists created with a random number generator. Intervals between playbacks depended upon the availability of fishes (i.e. that there were fish present at the camera to expose) and whether or not reactions occurred, but were typically 5 min. All playbacks were undertaken in <15 m of water to allow sufficient light levels for the cameras. Conditions of Beaufort Sea state two and below were also necessary to ensure suitable working conditions and minimise noise from waves hitting the shore and vessel.

The video footage was analysed with two methods according to the suitability of the footage. The first approach trialled the use of motion analysis software to analyse the 3D motion of the fish. Programs primarily considered for this purpose included those relying on algorithms based upon contrast, that is, on dark objects on a light background or vice versa, for example ImageJ (Abràmoff et al., 2004), WinAnalyse 2D (Alvarez and Fuiman, 2006) Lolitrack 1, Loligo systems) (Tudorache et al., 2009), MaxTraq, Innovision Systems, (Merakova and Gvozdık, 2009) and Ethovision (Noldus) (Peitsaro et al., 2003). However these are best suited to laboratory work such as tracking movement in a petri dish. As such other more specialised programs, requiring special markers and camera systems to function were considered, which had a greater potential to analyse footage with variable light levels, water visibility and background conditions including: Qualisys software (Qualisys) and Visual 3D (C-motion inc.), WinAnalyse (Mikromak) (Alvarez and Fuiman, 2006), ProAnalyst (Xcitex, Inc.), Visual Fusion (Sanders-Reed, 1995) and Simi motion 3D (SIMI Reality Motion systems). The more sophisticated programs such as SIMI were principally created for use in biomechanics (e.g. Bence et al. (2006)), but have also been used to track organisms (Schaub and Schnitzler, 2007). After preliminary tracking using a number of programs, Simi motion 3D was chosen due to the tracking algorithms which are able to deal with variation in the footage in terms of light levels, variable background conditions and indistinct targets. The system required simultaneous calibration of the cameras allowing 3D co-ordinates of subjects to be calculated accurately. This was undertaken using a purpose-built PVC cube (55 cm, with a fixed camera angle of 60–120°). The two cameras were calibrated using the 'check calibration' function in SIMI Motion, with the accuracy

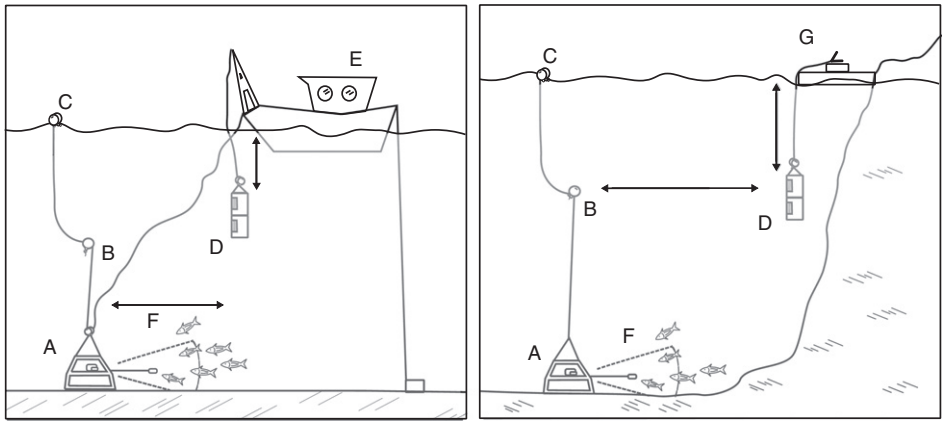

Fig. 3. A. Deployment diagram of the BRUV and sound projector array from an anchored vessel (left) and from shore (right). A. BRUV frame, B. subsurface buoy with umbilical cable to boat, C. Buoy for retrieval of frame and for mounting of the access point that provided the wireless link when in use, D. Transducer array (2–6 projectors), E. experimental vessel with a frame for deployment of equipment and playback controls, F. Field of view, G Observer station on shore with laptop and playback controls. Figure from Roberts, 2015.

of values required (principal point, axes angle, captured points) calculated within SIMI.

Additional video was scored for behavioural changes at playback occurrence, based on definitions from Slabbekoorn et al. (2010) and Van der Graaf et al. (2012), summarised in Table 1. Behaviour was monitored for 10 min post-playback, a time period deemed reasonable to encompass the typical startle-type reactions exhibited.

3. Results

3.1. Behaviour monitoring

Video observations from Lough Hyne were used to trial the efficacy of the SIMI Motion software for tracking fish movement in the natural environment. Two-spotted gobies *Gobiusculus flavescens,* were very common in shallow areas (<2 m) of the Lough and the prominent black spot on the caudal fin allowed the species to be identified easily and tacked in the footage obtained (Fig. 4). Each goby was tracked individually, enabling parameters such as acceleration and velocity to be calculated and graphed. SIMI was able to track the black spot almost entirely automatically, however some manual intervention was required to oversee the process. Aggregations of pollack (*Pollachius pollachius*), and thicklip grey mullet (*Chelon labrosus*) were also trackable within SIMI, (despite not having distinguishing marks like *G. flavescens*) being slow moving around the bait and contrasting from the background of the footage. Whilst the authors recommend the software for the purpose, the tracking process was fairly lengthy, since each individual fish had to be tracked individually rather than multiple targets simultaneously. For this reason, the large amount of Plymouth footage was scored using behavioural measures instead of the tracking approach.

3.2. Behavioural responses to playback signals.

The behavioural responses observed are summarised in Table 2. Whilst responses were clear, statistics to identify the threshold noise levels at which 50% of the exposed fish are expected to respond were not undertaken on the data, due to the uncertainty resulting from the realised sample size (low replication).

3.2.1. Lough Hyne

Grey mullet, observed circling the camera regularly, were generally unresponsive to shipping playback (n = 101 observations), a sharp

Table 1
Behavioural changes recorded at playback occurrences, as scored based on preliminary observations, and definitions from Slabbekoorn et al. (2010) and Van der Graaf et al. (2012) for free-living animals.

	Behaviour	Description
NR	No observable response Continued behaviour	No change. e.g. continued foraging, continued swimming behaviour
OR	Brief orientation response	Flinch/spasm (c-start), for a few seconds after stimuli.
POR	Prolonged orientation response	Prolonged orientation behaviour e.g. one change of direction immediately after exposure, or slow movement towards or away from the bait in an opposite orientation to pre-exposure, and duration of. (orientation change more prolonged than c-start) Stays within field of view.
PI	Pause and resume	Moderate cessation or 'pause' of behaviour exhibited prior to exposure (e.g. ceases to feed, guard food, guard territory). Resumes behaviour immediately after. Displays different behaviour (e.g. aggression to other fish) not exhibited prior to exposure. Stays within field of view.
MON	Moved out of frame, no return	Rapid change in direction, speed, location immediately after exposure leading to *exit from the field of view* completely and rapidly. No return.
MORI	Moved out of frame, return immediately	Rapid change in direction, speed, location immediately after exposure leading to *exit from the field of view* completely and rapidly. Returned immediately
MORI-2-8	Moved out of frame, prolonged return	Rapid change in direction, speed, location immediately after exposure leading to *exit from the field of view* completely and rapidly. Returned within 2–8 min

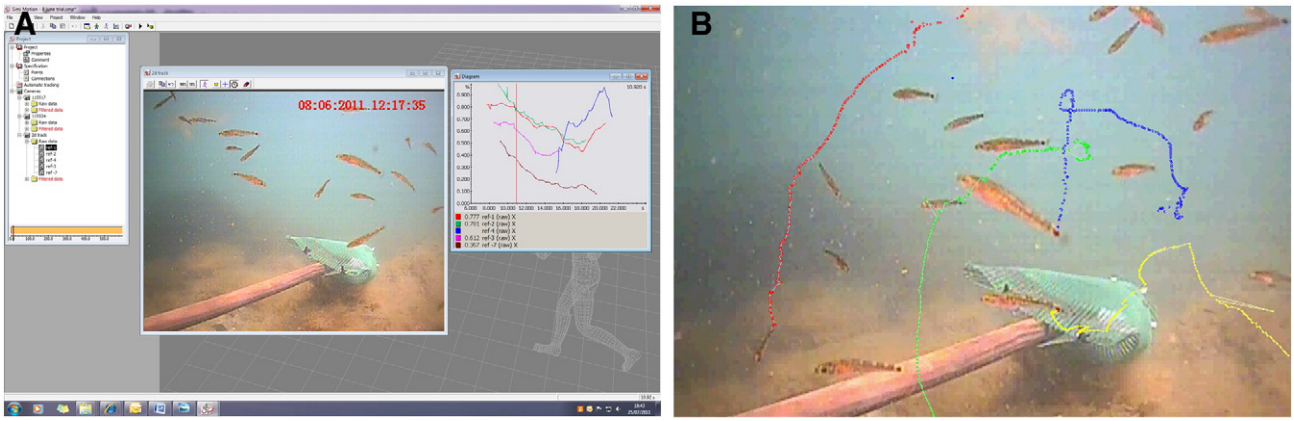

Fig. 4. Digital stills taken from SIMI Motion Analysis software, tracking the movement of two-spotted goby (*Gobiusculus flavescens*) around the BRUV bait during testing of the system (view from the right camera of the stereoscopic pair). Digital still of motion analysis software showing the original video still and a graph of fish acceleration (A), with different colours representing the various gobies tracked in (B); Example tracks of four different gobies, the reader is referred to the web version of this article for colour.

directional change was observed in two individuals at the highest exposure level on one occasion (135.7 dB re 1 μPa root mean squared, RMS, received). No reactions were observed to control trials indicating that the equipment itself did not have an effect.

Of the responses exhibited, those of pollack were most clear since swimming behaviour was observed at length prior to this, and was dissimilar, with no sudden sharp directional changes or accelerations. As an example the average swimming speed of one pollack prior to the response was 0.02 m s^{-2}, immediately after exposure to synthetic pile-driving this increased to 7.21 m s^{-2} accompanied by a complete directional change (fig. 5). However, out of 16 pollack observed during playback, only one fish responded making generalisations impossible.

Two-spotted gobies (n = 25–50 per frame at any one playback, hundreds present within the exposure area) did not respond to synthetic pile-driving sound (levels c.a. 144–167 re 1 μPa SPL peak-to-peak) possibly due to the shallow location of their habitat which is expected to be relatively noisy and may render the species insensitive to the sound levels used in the experiments.

3.2.2. Plymouth

At the Plymouth experimental site the most abundant species were cuckoo wrasse (*Labrus mixtus)* and pollack with 213 and 106 fish observed respectively as part of groups or schools. A total of 144 playback trials (excluding silent control exposures) were undertaken, with 10 different species recorded during this time.

The predominant reaction observed to synthetic pile-driving was a c-start most frequently by cuckoo wrasse but also exhibited by other species such as pollack at 167.0 dB re 1 μPa peak-to-peak (received) (Table 2). This was observed at the maximum exposure level, most often at the onset of exposure, although in some cases was exhibited halfway through. In total 36 responses were observed out of 144 excluding silent control exposures. In some cases during exposure to repeated pile-driving sounds, one fish responded whilst others continued feeding, and in other cases fishes responded to alternate strikes.

It is of note that most responses were short term, with the fish returning to previous behaviour within a few minutes. For example, several cuckoo wrasse were deterred from the bait upon exposure onset, but returned within 2–8 min.

Although the responses were observed at the top level of playback, the precise sound level was unable to be measured with precision due to an equipment malfunction. A speculative estimate of the sound levels at the frame would be a maximum received level of 167.0 dB re 1 μPa peak-to-peak, which was measured in previous trials when the cameras were approximately 10 m from the array (10–15 m depth). This is an estimate given that it is an extrapolation from previous trials in other locations where propagation conditions may have been different.

Table 2
Summary table for the results of BRUV trials. Behavioural responses are described as orientation response (POR), brief orientation response (OR), moved out of frame and returned immediately (MORI), no response (NR), moved out of frame no return (MON). Reactions were exhibited at the highest exposure levels. Figures in brackets indicate the number of fish exposed in total (total number of successful playbacks).

Species	Frequency (total exp)	Behaviour	Signature	Max. SPL dB re 1 μPa (pk-pk, received)	Max. SL dB re 1 μPa (pk-pk)	Background SPL dB re 1 μPa (RMS)	Details	Observations
G. flavescens	–	NR	Impulsive	c.a. 144–167		105.7–114.8	Lough Hyne	Exposed during numerous equipment tests (non-quantitative)
P. pollachius	3–4 1 (16)	POR		167 166.6	181 n/a			Motion analysis undertaken. Acceleration changes observed.
C. labrosus	1 (69) 1 (32)	PORMORI	Shipping Impulsive	135.7 (RMS) 163.4	n/a n/a			101 exposures undertaken, cameras deployed from shore in water depth < 10 m.
C. labrosus	2 (15)	OR	Impulsive & Shipping	144.2–166.6			Lough Hyne	84 exposures, but footage quality poor, hence only 16 observations of fish pre- and post exposure undertaken. 19 control exposures, no responses observed. Response observed at highest sound levels only.
P. pollachius and *C. labrosus*	36 (144)	MON/OR/POR	Impulsive	167	171 (10 m)	n/a	Plymouth sound	19 sites, depth < 24 m, 144 playbacks. 10 species recorded. Estimated sound levels from previous trials.

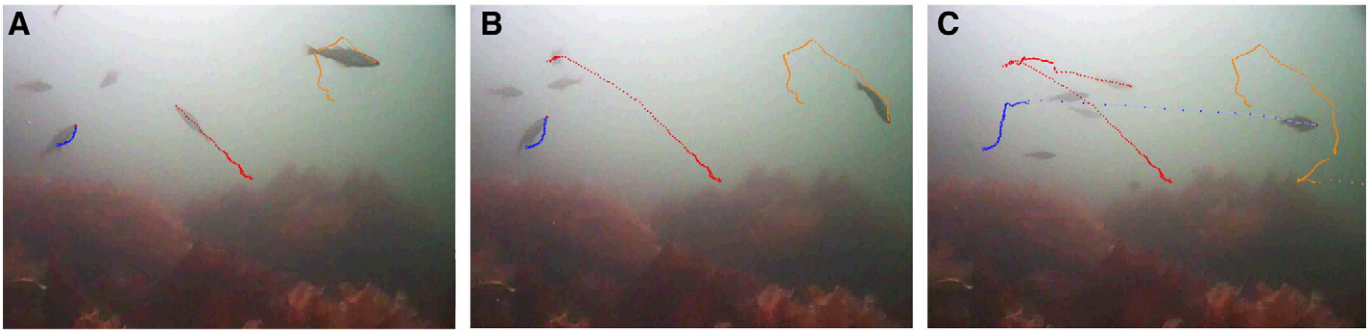

Fig. 5. Digital stills taken from SIMI Motion Analysis software, tracking the movement of three pollack (*Pollacius pollachius*) in response to playback noise (view from the left camera of the stereoscopic pair). Each fish was shown to accelerate after exposure. Red fish (trace) acceleration and change of direction exhibited, Yellow fish (trace) sharp change of direction exhibited and acceleration out of the field of view, Blue fish (trace) approximately vertical movement exhibited prior to playback, then a sharp change of direction in the horizontal plane to leave the field of view.

4. Discussion

4.1. Responses to exposure

The species observed within this study have different hearing abilities and therefore are likely to respond in different ways to similar sound exposures (discussions of hearing criterion: Popper et al., 2014, Ladich and Fay 2013). Pollack, in the Gadidae family, may detect both the particle motion and pressure component of a sound wave, due to the presence of a gas bladder. Without a physical connection between the gas bladder and the ear, the species hearing is more restricted in terms of frequency range compared to other, more sensitive species. Other Gadidae species such as *Gadus morhua* (cod) appear sensitive in the frequency range of 30–470 Hz (Chapman and Hawkins, 1973) and to infrasound (<40 Hz) (Sand and Karlsen, 1986). The cuckoo wrasse family Labridae, another species with a gas bladder but without a connection to the inner ear, appears to be sensitive up to 1300 Hz (Schuijf et al., 1971; Tavolga and Wodinsky, 1963). Finally the two spot goby family Gobidae, may be sensitive up to 400 Hz due to a gas bladder, but is less sensitive to sound than the aforementioned species (Lugli et al., 2003). Therefore, as indicated in the present work, *G. flavescens* and L. *mixtus* were most likely to exhibit different responses to the playback sounds due to varied detection abilities. Indeed the two spot gobies observed at Lough Hyne did not appear to respond to playback noise. They may have been habituated to high background sound or noise disturbance due to their frequent aggregations under a floating boat jetty close to shore (Chapman and Hawkins, 1969; Knudsen et al., 1992; Peña et al., 2013).

Despite the preliminary nature of the trial data, and thus tentative inter- and intra-species extrapolations, the results here indicate that impulsive noise in the received sound pressure level (SPL) range of 163–167 dB re 1 μPa (peak-to-peak) is sufficient to elicit behavioural responses from these species, such as c-start and directional avoidance. The exposure levels here were similar to the 50% response levels calculated in Hawkins et al. (2014b) for schools of sprat *Sprattus sprattus* and mackerel *Scomber scombrus*, which used the same sound projector array. Whilst the 50% response level could not be calculated for the current work due to the small amount of data, this will likely vary according to the species hearing ability and also with exposure context. It is possible that the species encountered and exposed have higher auditory thresholds.

Playback of shipping noise of received SPL 142.7 dB re 1 μPa (RMS) was sufficient to startle thicklip grey mullet repeatedly here. Similar levels of boat noise (142–162 dB re 1 μPa, RMS) have been demonstrated to alter the time budgets of reef fish such as red-mouthed gobies and damsel fish (*Gobius cruentatus* and *Chromis chromis*), which subsequently spent less time caring for nests (Picciulin et al., 2010). However there is great variation in the frequency composition of boat engine noise, and therefore the exposures of the current work may not be directly comparable to other boat playback exposures. For example the signatures of Picciulin et al. (2010) had a main spectra energy content of below 1.5 kHz (peaks 1033 Hz and 602 Hz for a ferry and small recreational boat, respectively).

There are few previous studies giving comparable data to those here that have observed free-living fishes during playbacks of sound (Picciulin et al., 2010; Wardle et al., 2001), Table 3. Wardle et al. (2001) found that individual tagged reef fishes did not react to airgun shots of received peak SPL 195–210 dB re 1 μPa (201–216 dB re 1 μPa peak-to-peak). Regular video recordings indicated that the noise did not disturb the daily patterns of the schooling and resident fishes, apart from the involuntary c-start response. The fish, as residents of the reef, may well have detected the sound but that it was not deemed a sufficient threat to leave the 'safety' of the home territory. This emphasises the importance of 'motivational state' influencing reaction in the animal (Lima and Dill, 1990); for example, the lure of the bait may override responsiveness to sound. Nomadic or migrating fishes would perhaps respond in a different way, perhaps as shown in the current work. It is of note that the camera system in Wardle et al. (2001) used a floodlight and this may have affected behaviour, although this may have been counteracted by the long duration of the system on the seabed allowing full acclimation of the fishes.

The remaining studies involve captive fish in field conditions, (summarised in Table 3). In the current work, c-start responses were exhibited by cuckoo wrasse and pollack, in addition to directional changes and acceleration. These responses are in accordance with Table 3, with the exposures in this case being clearly sufficient to cause behavioural changes despite the provisional analysis.

The replication of impulsive noise in the current work is thought to be representative of actual pile-driving (discussed later), therefore comparisons may be made between the current work and others using pile-driving exposures, for example Nedwell et al. (2006) who exposed caged brown trout (*Salmo trutta*) to pile-driving. Received levels in the cages (calculated from the data later) and estimated at 189 and 198 dB re 1 μPa (peak) (204 dB re 1 μPa peak-to-peak) for small and large diameter pile-driving respectively (Popper and Hastings, 2009). However, it is important to emphasise that whilst the water-borne component of the sound was accurately reproduced, many activities, such as pile-driving, produce additional substrate-borne vibrations which the projector could not, and did not, aim to mimic (Nedwell et al., 2003; Roberts et al. 2015, Roberts et al. 2016). However, for the species observed here, being demersal or pelagic, this is not likely to be of great significance.

4.2. Experimental setup and deployment

4.2.1. Motion analysis of footage

Motion analysis software was successfully used to track the movements of fishes in response to noise. The system was simple and was

Table 3
Summary of studies which have observed fish (captive or free-living) during playbacks of sound in field conditions up to 2015.

Species	Location	Condition	Observation method	Source type	Sound levels of reactions (dB re 1 μPa peak)	Sound levels dB re 1 μPa (peak to peak)	Particle motion (dB re 1 m s^{-2} peak)	Results	Notes	References
Salmo trutta	Southampton Water, E. England	Cage 1 m^3	Closed circuit TV camera	Vibro pile-driving. 10 piles, two diameters	c.a 189–198	204	n/a	No response.	Received levels estimated in Popper and Hastings (2009)	Nedwell et al. (2006), Nedwell et al. (2003)
Oncorhynchus kisutch	Lake Washington Ship Canal, Washington	Cage 1 m × 1 m × 1.5 m	Camera remotely controlled.	Pile-driving	208	214	n/a	No response.	Farmed fish	Ruggerone et al. (2008);
Sebastes sp.	Estero Bay, California.	Enclosure	Viewing box	Airgun (100 in^3)	200	160	n/a	Diving, startle and swimming changes.		Pearson et al. (1992).
Gadus morhua &*Solea solea.*	Loch Ceann Traigh, W. Scotland	Net mesocosms (40 m)	Acoustic tags and RUV	Playback of pile-driving signature	140–160	146–166	0.00086–0.0065	Sole increased in speed. Cod significant freezing response. Directional avoidance.	Farmed fish and long 'ping' interval of 22 s on tags	Thomsen et al. (2008)
G. morhua, Pollachius pollachius; P. virens	Loch Ewe, Scotland	No restriction	RUV with lights on reef and acoustic tags	Triple airgun (150 in^3)	195–210	201–216	n/a	No signs of avoidance or change in day to day behaviour. Involuntary c-start.	Fish caught by rod and line	Wardle et al. (2001)
Gobius cruentatus & *Chromis chromis*	Miramare Marine Reserve, Italy	No restriction	Diver-held camera	Playback of boat noise	142–162 (RMS)	–	Estimated	No short term behavioural reaction but alteration of time budget (nest and shelter time).		Picciulin et al. (2010)

able to track movement automatically using pattern-matching with additional manual intervention, and digital stills of tracks and graphed parameters were straightforward to produce using accurately calibrated cameras. Footage obtained during the field trials was trackable to varying degrees depending on the species observed, light levels and background conditions, illustrating that for free-ranging experiments motion analysis software is an efficient and effective tool. Of course, this approach can only be of use when fish are within the frame of view; hence its value is restricted for short lived behavioural changes over a small spatial scale.

Tracking software has been used to measure movement in a variety of different organisms ranging from spiders and crickets (Hall et al., 2010; Sensenig et al., 2010) to bats and chameleons (Fischer et al., 2010; Schaub and Schnitzler, 2007). Three-dimensional tracking programs are not specifically designed for fishes, however, therefore the automatic algorithms used are sometimes unable to pick up movement without the use of markers to target specific features. Many interpretations and standardisations have to be used for example choosing which part of the fish to track (eye, coloured feature, or caudal or dorsal fin), the problem of fishes leaving the field of view and more large-scale problems such as the influence of interactions between individuals and species within the footage. For example, in the case of the Lough Hyne footage, two-spotted gobies were automatically tracked due to the clear black spot on the caudal fin, however, difficulties were encountered with more cryptic species.

4.2.2. Deployment

The current experiment was logistically challenging, especially in field conditions, since certain depths and distances were required, which in some cases meant periodic readjustment of the vessel as the tide changed. Anchoring of the vessel near the BRUV required precise positioning, taking into account the prevailing currents and the distance from the camera frame. In the later trials, the umbilical cable from the camera frame also had to be suitably slack throughout the experiment to ensure stability of the BRUV. This meant, in some cases, continual adjustment of the equipment and the vessel. Modification of the buoyancy on the ropes was necessary to prevent the umbilical rope being lost. Such deployment concerns, whilst common to marine work, created difficulties in the field. There was concern that even with the engine off, the boat made noise (e.g. wave slap). For this reason it was suggested that a large buoy could be used to deploy the projector array remotely in a similar way to the camera and operated from distance but this was not attempted due to time constraints. Instead, for later attempts a smaller vessel was used to minimise these potential confounding effects.

Even without the sound projectors, deployment of the BRUV had its own difficulties such as instability, retrieval issues caused by the entanglement of cables on the seabed or on macroalgal fronds, or an obscured field of view. Moveable camera heads, controllable from the surface, would have been valuable for the latter. There were additional problems through a normal feature such as a lack of fish aggregations across exposed area, hence where possible deployments were undertaken near to wrecks or reefs, and a wide range of bait was used. In situations like this the knowledge and expertise of the skipper was essential. In some cases the choice of site overruled other conditions required for the experiment, for example despite multiple attempts at the work away from boat traffic, the final experimental area in Plymouth was closer to the harbour than intended, simply due to higher fish aggregations in these areas.

The greatest difficulty was that of water visibility which required constant monitoring of water conditions, meaning that an 'on call' approach was necessary for mobilisation. The success of a deployment was thus a trade-off between ideal bathymetry, camera picture, water visibility, ambient noise levels and numbers of species present. It was not possible without long-term monitoring to know whether the particular area was suitable for the BRUV approach. Ideally an area of

importance to the resident species - for example a key breeding or foraging area would be suitable.

It is of note here that use of hand-held diver cameras could not be undertaken due to high levels of playback sound being introduced into the water, and since a live feed was required to the surface to alert the experimentor of fish presence before and after the exposure.

Although great efforts were taken to maximise the attractiveness of the BRUV to targeted species, in some locations such as Lough Hyne, there were only transient animals with no or little interest in the bait. Ideally bait would not have been used to attract animals, with reliance on individual natural behaviours leading to approaching the playback station, but it was clearly necessary to entice fish to the proximity of the cameras and to observe sufficient numbers of organisms. Light may also be used as an attractant but may also affect behaviour (Juell and Fosseidengen, 2004; Raymond and Widder, 2007; Ryer et al., 2009). The second set of experiments attracted more fish, and experiments could be undertaken even though a low number so positive reactions were observed. It is not clear whether fish that have been lured to the bait may 'choose' not to respond to audible stimuli at levels that would otherwise elicit a response.

Here in some cases it was difficult to follow each subject throughout the duration of a playback clip. Furthermore it was often unclear if that same individual was exposed multiple times to the same stimulus or noise levels. This could be overcome by using an array of cameras or by monitoring the organism movement in another way. For example acoustic tags can be used, eliminating the need for confinement but maximising the traceability of the target (Engås et al., 1998; Thomsen et al., 2010; Wardle et al., 2001). However the overarching aim here was the observation of free-ranging and non-manipulated animals. Tagging is an invasive process and responses may not be fully representative of natural behaviour; tagging also limits the species type and abundance that can be observed.

The sounds produced were an accurate representation of an actual pile driver and a large container ship in the acoustic far field, in terms of energy peaks and spectra, as discussed in detail in Hawkins et al. (2014b). In addition to this, the pulse-like nature of the synthetic impulsive sound in this work is similar to that of airguns or pilling, providing a tentative indicator of responses to these source types. The water-borne SPL of pile-driving may be in excess of 210 dB re 1 μPa peak-to-peak at 100 m from the source, and at 10 km may be over 140 dB re 1 μPa peak-to-peak (Nedwell et al., 2003). Therefore responses observed in this study were elicited at levels that fall within the vicinity of a pile-driving rig up to 10 km. The shipping noise in this study elicited responses at 142.7 dB re 1 μPa (RMS). Other continuous sources, such as drilling and wind turbines have been measured at 142–145 dB re 1 μPa (RMS) (Götz et al., 2009), within a similar frequency range and therefore the species here may react in a comparable way to these sources.

4.2.3. Challenge of linking results to population level

The present work indicates that short term responses by individuals may be elicited by impulsive and continuous noise stimuli, and on a wider scale research shows that the effects may range from death, injury and damage to hearing, loss of communication to distributional changes, predator-prey modifications, reduced feeding or problems with orientation (Engås et al., 1996; Hawkins et al., 2014b; McCauley et al., 2003; Popper et al., 2007; Simpson et al., 2014; Smith et al., 2004; Wale et al., 2013). Scaling these changes up to the population level is a major challenge, although this has been proposed using various models. These include the source-path-receiver model (Richardson et al., 1995; Tasker et al., 2010), and the Population Consequence of Acoustic Disturbance (PCAD) devised for marine mammals (NRC, 2005) (recently transferred into a workable mathematical version with consideration to other disturbances, Harwood and King, 2014). Another approach is the use of individual-based modelling (IBM) (NRC, 2005; Willis, 2011), which incorporates physiological and behavioural traits of individuals with environmental parameters enabling the prediction of responses to stressors (Rossington et al., 2013; Willis, 2011; Willis and Teague, 2014). These models are based on 'rules' such as for movement and for physiological requirements of fish. For example Rossington et al. (2013) used IBM to predict the response of cod to noise from an offshore wind farm. However all such approaches require detailed information on responses, life histories, exposure levels as well as the dose-response relationship, and whether responses are ecologically relevant (affecting fitness) for which data are lacking, especially for fish (Popper et al., 2014). The approach detailed here, with SIMI software potentially producing detailed locomotory parameters of the fish such as swimming speeds, directional and angular changes, is able to provide relevant data which, in association with hearing abilities, could be incorporated into such models. Similar approaches could be applied to invertebrates such as crustaceans and bivalves, for which recent sensitivity to anthropogenic vibration has been documented (Roberts et al., 2015, 2016).

A different approach to predicting the impacts of noise may be to use a risk assessment framework (Hawkins and Popper, 2014; Tasker et al., 2010). This may consist of hazard identification, exposure assessment, exposure response assessment, risk characterisation and risk management (Tasker et al., 2010). The applicability of this approach to marine species is discussed by Hawkins and Popper (2014) by using a specific experimental case study involving fish schools exposed to impulsive sound (Hawkins et al., 2014b). The current work, sharing the same playback array and noise signatures as Hawkins et al. (2014b), when repeated on a larger scale would be able to inform such approaches. Alternatively, Ellison et al. (2011) propose a deviation away from dose-response based predictions, towards a contextual approach involving many factors, such as activity state of the animals, or novelty of the sound to the animal, rather than amplitude of exposure alone. Again, the observations from the current study enhance that contextual approach.

4.2.4. Management implications

Until recently, 'noise' has been little considered as a pollutant sensu stricto, i.e. material added to the environment which potentially causes biological harm. This has changed with the advent of governance initiatives such as the 2010 EU Marine Strategy Framework Directive (MSFD) which includes noise in a Descriptor used to determine whether an area is in Good Environmental Status by 2020 (Borja et al., 2013). The framework comprises of eleven qualitative descriptors, of these the eleventh refers to underwater noise, defined as "the introduction of energy, including underwater noise, is at levels that do not adversely affect the marine environment" (Tasker et al., 2010; Van der Graaf et al., 2012). There are two indicators relating to noise, relating to low and mid frequency impulsive sounds (indicator 11.1.1) and low frequency continuous sound (indicator 11.2.1). These must be defined and monitored with time. Hence, although population level effects are little understood, management of noise within the marine system must still be undertaken. Mitigation measures may involve control of the noise source itself, engineering changes to reduce noise production, and monitoring of noise levels. Using the 10-tenets of sustainable and successful marine management proposed by Elliott (2013), management of noise must be ecologically sustainable, economically viable, i.e. not prohibitively expensive to the industries creating ocean noise; technologically feasible i.e. having appropriate technology for reduction, and societally tolerable, i.e. having measures accepted by communities if they are to be successful (Ducrotoy and Elliott, 2008; Elliott, 2013; Normandeau Associates, 2012). The recent legislation, such as the MSFD, gives support for effective measures and monitoring systems. Mitigation measures require the setting of specific quantitative standards or criteria ('rules') and the enforcement of such standards; indeed if there are no quantitative standards then monitoring cannot detect if management measures have been successful (Elliott, 2011). This is further complicated as noise, as with other anthropogenic stressors, may be cumulative or in combination with other influences (Crain et al., 2008; Halpern et al.,

2008; Normandeau Associates, 2012; SoundWaves et al., 2012). For example pile-driving not only creates noise, but the end-product may be a new physical structure in the ocean, which may induce local environmental changes such as artificial light and chemical or hydrographical variations. Other sounds are intentionally produced, such as seismic surveys, or are incidental to human processes such as the transport of goods (shipping) or the construction of a wind farm (pile-driving) (SoundWaves et al., 2012). Indeed, a comprehensive management of multiple environmental stressors is necessary to evaluate impact upon the marine environment (Elliott, 2014; Halpern et al., 2008); hence noise monitoring and management become an integral part of marine management.

Given the increasing development of indicators to assess environmental quality (Borja and Dauer, 2008; Gray and Elliott, 2009; Rees et al., 2006), noise criteria must be defined quantitatively and for successful need to be SMART- Specific, Measurable, Achievable, Realistic and Timely (Doran, 1981). As yet, such indicators have been proposed but yet adopted for noise, hence the importance of empirical evidence such as that given here. It is recognised that the proposed indicators do not, and do not seek to, cover all anthropogenic sources, for example an indicator to cover acoustic deterrent devices has been suggested for the future (Tasker et al., 2010). However implementation of such a strategy is difficult, as discussed by Van der Graaf et al. (2012). International standards are even lacking for the terminology describing underwater sound, there are few baseline data and the effects of noise upon marine organisms is relatively unknown compared to other pollutants. Van der Graaf et al. (2012) discuss three options for setting the exposure criteria of impulsive sound (indicators 1 and 2) within the paucity of data: the first is to use two exposures defined by Tasker et al. (2010) (183 dB re 1 μPa^2 m^2 or zero to peak source level 224 dB re 1 μPa^2 m^2), the second is to use a risk assessment approach to estimate threshold values (e.g. Cormier et al., 2013), and the third is to estimate threshold levels for each source individually. It is proposed that option 2 is best since it would incorporate a more solid scientific foundation. Once a threshold is decided for a source, a register of impulsive sounds will be used to enable enforcement. For continuous low frequency sound (indicator 3), it is proposed that, due to the costly nature of ambient noise monitoring, areas of high shipping traffic are to be monitored and modelled (Van der Graaf et al., 2012). This approach has been questioned within the underwater acoustics research community, for example Merchant et al. (2014) argue that by representing high traffic areas only, changes in areas of lower pollution will be overlooked.

In order to aid the setting of indicators, and implementation of management approaches then, there is a need for methodologies such as the current work for quantifying the dose of noise required to elicit behavioural responses in fish. Most crucially, these methods should be repeated on a variety of species, using variable source types, to begin to fill the 'information gaps' present in the underwater research field (Hawkins et al., 2014a).

5. Conclusions and recommendations

The experimental methods, noise sources, metrics reported, environmental parameters and use of naïve experimental subjects presented in this work provide a viable approach to investigate responses to calibrated noise signatures. Through these initial results, the current work was successful in developing the equipment and methodology required to undertake a BRUV experiment which has not, to this extent, previously been attempted. This method shows that it is possible to observe reactions of individual fish to noise without the use of tags or captivity which may adversely affect behaviour. Given the ambitious nature of the experiment it is not surprising that future recommendations are the basis of this work, rather than solid dose response outputs, but that the results indicate that the 'ideal' playback experiment on wild fishes is feasible with our considerations taken into account.

It is recommended that similar studies should be performed in a semi-enclosed, or enclosed area where a camera system could be deployed for a long period, to be monitored continuously from the surface perhaps from shore. Although it is difficult to find a suitable location success of the experiment could be achieved using landers with a maximised field of view (for example four cameras, a set on each side, thus doubling the field of view), and long-term deployments would provide more flexibility. Alternatively several synchronised 360° imaging panoramic or wide angle cameras arranged in semi-permanent motion capture arrays could be monitored for fish behaviour and received noise levels from nearby coastal locations via a wireless IP network as trialled in the first BRUV prototype. Such state-of-the-art motion capture array(s) can be easily linked to sound projectors of the type used in this work using existing Transmission Control Protocol/Internet Protocol (TCP/IP) technology. Motion capture arrays could be deployed at different locations where anthropogenic noise is expected to vary with time (before-after condition) or sister arrays deployed within control (no anthropogenic noise) and exposure locations where anthropogenic noise is expected (shipping route, seismic prospection area, drilling or pilling zone, etc.) (control-impact conditions).

The prototypes and methodologies developed in this study can provide a crucial basic understanding of thresholds of response and type of short term reactions expected from realistic noise exposures for a range of marine species. However the translation of short term behaviours of fish (and invertebrates) up to population level implications, and the use of such data to inform management requires further research.

Supplementary data to this article can be found online at http://dx.doi.org/10.1016/j.marpolbul.2016.08.039.

Acknowledgements

We are grateful to the UK Department for Environment, Food and Rural Affairs (Defra) for funding the SoundWaves Consortium and the associated doctorate of LR (grant number ME5205), and to the following for technical discussions and fieldwork support: A. Hawkins (Loughine Ltd.), S. Cheesman and D. Hughes (formerly Subacoustech Ltd.), M. Downie, M. Bentley, and I. Spiga (Newcastle University). We are also grateful to A. Shaw (Tracksys Ltd.) for motion analysis training, and to J. Butterfield & M. Bailey (IECS, University of Hull), and R. McAllen (University College Cork) for assistance with fieldwork. This paper is a contribution under the DEVOTES (DEVelopment Of innovative Tools for understanding marine biodiversity and assessing good Environmental Status) project, funded by the European Union under the 7th Framework Programme, 'The Ocean of Tomorrow' Theme (grant agreement no. 308392), www.devotes-project.eu.

References

Abràmoff, M.D., Hospitals, I., Magalhães, P.J., 2004. Image processing with ImageJ. Biophoton. Int. 36–42.

Alvarez, M., Fuiman, L.A., 2006. Ecological performance of red drum (*Sciaenops ocellatus*) larvae exposed to environmental levels of the insecticide Malathion. Environ. Toxicol. Chem. 25, 1426–1432.

Bence, T., Schreiber, U., Grupp, T., Steinhauser, E., Mittelmeier, W., 2006. Two column lesions in the thoracolumbar junction: anterior, posterior or combined approach? A comparative biomechanical in vitro investigation. Eur. Spine J. 16, 813–820.

Benhaïma, D., Péanb, S., Lucasa, G., Blanca, N., Chatainc, B., Bégoutb, M.-L., 2012. Early life behavioural differences in wild caught and domesticated sea bass (*Dicentrarchus labrax*). Appl. Anim. Behav. Sci. 141, 79–90.

Blaxter, J.H.S., Hoss, D.E., 1981. Startle response in herring: the effect of sound stimulus frequency, size of fish and selective interference with the acoustico-lateralis system. J. Mar. Biol. Assoc. UK 61, 871–879.

Borja, A., Dauer, D.M., 2008. Assessing the environmental quality status in estuarine and coastal systems: comparing methodologies and indices. Ecol. Indic. 8, 331–337.

Borja, A., Elliott, M., Andersen, J.H., Cardoso, A.C., Carstensen, J., Ferreira, J.G., Heiskanen, A.-H., Marques, J.C., Neto, J.M., Teixeira, H., Uusitalo, L., Uyarra, M.C., Zampoukas, N., 2013. Good environmental status of marine ecosystems: what is it and how do we know when we have attained it? Mar. Pollut. Bull. 76, 16–27.

Cappo, M., De'ath, G., Speare, P., 2007. Inter-reef vertebrate communities of the Great Barrier Reef Marine Park determined by baited remote underwater video stations. Mar. Ecol. Prog. Ser. 350, 209–221.

Chan, A.A.Y.-H., David, S.W., Garlick, D., Fast, C.D., Blumstein, D.T., Blaisdell, A.P., 2010. Increased amplitude and duration of acoustic stimuli enhance distraction. Anim. Behav. 80, 1075–1079.
Chapman, C.J., Hawkins, A.D., 1969. The Importance of Sound in Fish Behaviour in Relation to Capture by Trawls FAO Fish Rep 62. pp. 717–729.
Chapman, C.J., Hawkins, A.D., 1973. A field study of hearing in the cod, *Gadus morhua* (L.). J. Comp. Physiol. A. 85, 147–167.
Cousins, N.J., Linley, T.D., Jamieson, A.J., Bagley, P.M., Blades, H., Box, T., Chambers, R., Ford, A., Shields, M.A., Priede, I.G., 2013. Bathyal demersal fishes of Charlie-Gibbs Fracture Zone region (49–541 N) of the Mid-Atlantic Ridge: II. Baited camera lander observations. Deep-Sea Res. II 98, 397–406.
Cormier, R., Kannen, A., Elliott, M., Hall, P., Davies, I. (Eds.), 2013. Marine and Coastal Ecosystem-based Risk Management Handbook. ICES Cooperative Research Report, No. 317, March 2013. International Council for the Exploration of the Sea, Copenhagen, p. 60 ISBN: 978-87-7472-115-1.
Crain, C.M., Kroeker, K., Halpern, B.S., 2008. Interactive and cumulative effects of multiple human stressors in marine systems. Ecol. Lett. 11, 1304–1315.
DEFRA, 2014. Marine Strategy Part Two: UK Marine Monitoring Programmes. DEFRA, pp. 1–86.
Domenici, P., Standen, E.M., Levine, R.P., 2004. Escape manoeuvres in the spiny dogfish (*Squalus acanthias*). J. Exp. Biol. 207, 2239–2349.
Doran, G.T., 1981. There's a S.M.A.R.T. way to write management's goals and objectives. Manag. Rev. 70, 35–36.
Ducrotoy, J.-P., Elliott, M., 2008. The science and management of the North Sea and the Baltic Sea: natural history, present threats and future challenges. Mar. Pollut. Bull. 57, 8–21.
Elliott, M., 2011. Marine science and management means tackling exogenic unmanaged pressures and endogenic managed pressures – a numbered guide. Mar. Pollut. Bull. 62, 651–655.
Elliott, M., 2013. The 10-tenets for integrated, successful and sustainable marine management. Mar. Pollut. Bull. 74, 1–5.
Elliott, M., 2014. Integrated marine science and management: wading through the morass. Mar. Pollut. Bull. 86, 1–4.
Ellis, D.M., DeMartini, E.E., 1995. Evaluation of a video camera technique for indexing abundances of juvenile pink snapper- *Pristipomoides filamentosus*, and other Hawaiian insular shelf fishes. Fish. Bull. 93, 67–77.
Ellison, W.T., Southall, B.L., Clark, C.W., Frankel, A.S., 2011. A new context-based approach to assess marine mammal behavioral responses to anthropogenic sounds. Conserv. Biol.
Engås, A., Misund, O.A., Soldal, A.V., Horvei, B., Solstad, A., 1995. Reactions of penned herring and cod to playback of original, frequency-filtered and time-smoothed vessel sound. Fish. Res. 22, 243–254.
Engås, A., Løkkeborg, S., Ona, E., Soldal, A.V., 1996. Effects of seismic shooting on local abundance and catch rates of cod (*Gadus morhua*) and haddock (*Melanogrammus aeglefinus*). Can. J. Fish. Aquat. Sci. 53, 2238–2249.
Engås, A., Haugland, E.K., Ovredal, J.T., 1998. Reactions of cod (*Gadus morhua,* L.) in the pre-vessel zone to an approaching trawler under different light conditions. Hydrobiologia 371 (372), 199–206.
Fernandes, P.G., Brierley, A.S., Simmonds, E.J., Millard, N.W., McPhail, S.D., Armstrong, F., Stevenson, P., Squires, M., 2000. Oceanography: fish do not avoid survey vessels. Nature 404, 35–36.
Fewtrell, J.L., McCauley, R.D., 2012. Impact of air gun noise on the behaviour of marine fish and squid. Mar. Pollut. Bull. 64, 984–993.
Fischer, M., Krause, C., Lilje, K.E., 2010. Evolution of chameleon locomotion, or how to become arboreal as a reptile. Zoology 113, 67–74.
Fuiman, L.A., Meekan, M.G., McCormick, M.I., 2010. Maladaptive behaviour reinforces a recruitment bottleneck in newly settled fishes. Oecologia 164, 99–108.
Götz, T., Hastie, G., Hatch, L., Raustein, O., Southall, B.L., Tasker, M., Thomsen, F., 2009. Overview of the impacts of anthropogenic underwater sound in the marine environment. Biodiversity Series.
Gray, J., Elliott, M., 2009. Ecology of Marine Sediments: From Science to Management. Oxford University Press.
Griffin, R.A., Robinson, G.J., West, A., Gloyne-Phillips, I.T., Unsworth, R.K.F., 2016. Assessing fish and motile fauna around offshore windfarms using stereo baited video. PLoS One 11, e0149701.
Hall, M.D., McLaren, L., B., R.C., Lailvaux, S.P., 2010. Interactions among performance capcities predict male combat outcomes in the field cricket. Funct. Ecol. 24, 159–164.
Halpern, B.S., McLeod, K.L., Rosenberg, A.A., Crowder, L.B., 2008. Managing for cumulative impacts in ecosystem-based management through ocean zoning. Ocean Coast. Manag. 51, 203–211.
Harvey, E.S., Shortis, M., 1995. A system for stereo-video measurement of sub-tidal organisms. Mar. Technol. Soc. J. 29, 10–22.
Harvey, E.S., Cappo, M., Butler, J.J., Hall, N., Kendrick, G.A., 2007. Bait attraction affects the performance of remote underwater video stations in assessment of demersal fish community structure. Mar. Ecol. Prog. Ser. 350, 245–254.
Harwood, J., King, S., 2014. The Sensitivity of UK Marine Mammal Populations to Marine Renewables Developments. Report SMRUL-NER-2012-027.
Hassel, A., Knutsen, T., Dalen, J., Skaar, K., Løkkeborg, S., Misund, O.A., Østensen, Ø., Fonn, M., Haugland, E.K., 2004. Influence of seismic shooting on the lesser sandeel (*Ammodytes marinus*). ICES J. Mar. Sci. 61, 1165–1173.
Hawkins, A.D., Popper, A.N., 2014. Assessing the impact of underwater sounds on fishes and other forms of marine life. Acoustics Today 10, 30–41.
Hawkins, A., Knudsen, F.R., Davenport, J., McAllen, R., Bloomfield, H.J., Schilt, C., Johnson, P., 2012. Grazing by sprat schools upon zooplankton within an enclosed marine lake. J. Exp. Mar. Biol. Ecol. 411, 59–65.
Hawkins, A.D., Pembroke, A.E., Popper, A.N., 2014a. Information gaps in understanding the effects of noise on fishes and invertebrates. Rev. Fish Biol. Fish. 1–26.
Hawkins, A.D., Roberts, L., Cheesman, S., 2014b. Responses of free-living coastal pelagic fish to impulsive sounds. J. Acoust. Soc. Am. 135, 3101–3116.
Juell, J., Fosseidengen, J.E., 2004. Use of artificial light to control swimming depth and fish density of Atlantic salmon (*Salmo salar*) in production cages. Aquaculture 233.
Kastelein, R.A., Heul, S.v.d., Verboom, W.C., Jennings, N., Veen, J.v.d., Haan, D.d., 2008. Startle response of captive North Sea fish species to underwater tones between 0.1 and 64 kHz. Mar. Environ. Res. 65, 369–377.
Kawaguchi, S., King, R., Meijers, R., Osborn, J.E., Swadling, K.M., Ritz, D.A., Nicol, S., 2010. An experimental aquarium for observing the schooling behaviour of Antarctic krill (*Euphausia superba*). Deep-Sea Res. II Top. Stud. Oceanogr. 57, 683–692.
Kemp, K.M., Jamieson, A.J., Bagley, P.M., Collins, M.A., Priede, I.G., 2008. A new technique for periodic bait release at a deep-sea camera platform: first results from the Charlie–Gibbs Fracture Zone, Mid-Atlantic ridge. Deep-Sea Res. II Top. Stud. Oceanogr. 55, 218–228.
King, N.J., Bailey, D.M., Priede, I.G., Browman, H.I., 2007. Role of scavengers in marine ecosystems. Mar. Ecol. Prog. Ser. 350, 175–178.
Knudsen, F.R., Enger, P.S., Sand, O., 1992. Awareness reactions and avoidance responses to sound in juvenile Atlantic salmon, *Salmo salar* (L.). J. Fish Biol. 40, 523–534.
Ladich, F., Fay, R., 2013. Auditory evoked potential audiometry in fish. Rev. Fish Biol. Fish. 23, 317–364.
Langlois, T.J., Harvey, E.S., Fitzpatrick, B., Meeuwig, J.J., Shedrawi, G., Watson, D.L., 2010. Cost-efficient sampling of fish assemblages: comparison of baited video stations and diver video transects. Aquat. Biol. 9, 155–168.
LeFrancois, C., Ferrari, R.S., Moreira Da Silva, J., Domenici, P., 2009. The effect of progressive hypoxia on spontaneous activity in single and shoaling golden grey mullet *Liza aurata*. J. Fish Biol. 75, 1615–1625.
Lima, S.L., Dill, L.M., 1990. Behavioural decisions made under the risk of predation. Can. J. Fish. Aquat. Sci. 68, 619–640.
Løkkeborg, S., Bjordal, A., 1992. Species and size selectivity in longline fishing: a review. Fish. Res. 13, 311–322.
Lugli, M., Yan, H.Y., Fine, M.L., 2003. Acoustic communication in two freshwater gobies: the relationship between ambient noise, hearing thresholds and sound spectrum. J. Comp. Physiol. A. 189, 309–320.
Mallet, D., Pelletier, D., 2014. Underwater video techniques for observing coastal marine biodiversity: a review of sixty years of publications (1952–2012). Fish. Res. 154, 44–62.
McCauley, R.D., Fewtrell, J., Popper, A.N., 2003. High intensity anthropogenic sound damages fish ears. J. Acoust. Soc. Am. 113, 638–642.
McGregor, P., 1992. Playback and Studies of Animal Communication Springer.
Merakova, E., Gvozdık, L., 2009. Thermal acclimation of swimming performance in newtlarvae: the influence of diel temperature fluctuations during embryogenesis. Funct. Ecol. 23, 989–995.
Merchant, N.D., Pirotta, E., Barton, T.R., Thompson, P.M., 2014. Monitoring ship noise to assess the impact of coastal developments on marine mammals. Mar. Pollut. Bull. 85-95.
Nedwell, J., Turnpenny, A., Langworthy, J., Edwards, B., 2003. Measurements of underwater noise during piling at the Red Funnel Terminal, Southampton, and observations of its effect on caged fish. Draft Report Prepared for Caltrans District 4. Caltrans, San Francisco, CA.
Nedwell, J., Turnpenny, A., Lovell, J.M., Edwards, B., 2006. An investigation into the effects of underwater piling noise on salmonids. J. Acoust. Soc. Am. 120, 2550–2554.
Nedwell, J., Turnpenny, A., Lovell, J.M., Parvin, S.J., Workman, R., Spinks, J.a.L., Howell, D., 2007. A validation of the dBht as a measure of the behavioural and auditory effects of underwater noise. Subacoustech Report No. 534R1231.
Normandeau Associates, I., 2012. Effects of noise on fish, fisheries, and invertebrates in the U.S. Atlantic and Arctic from energy industry sound-generating acitivities. A Literature Synthesis for the U.S. Dept. of the Interior, Bureau of Ocean Energy Management, Contract M11PC00031, p. 153.
NRC, 2005. Marine Mammal Populations and Ocean Noise: Determining When Noise Causes Biologically Significant Effects. U.S. National Research Council (NRC).
Parvulescu, A., 1964a. The acoustics of small tanks. In: Tavolga, W.N. (Ed.), Marine Bio-Acoustics. Pergamon Press, Oxford, pp. 7–13.
Parvulescu, A., 1964b. In: Tavolga, W.N. (Ed.), Problems of Propagation and Processing. Marine Bio-Acoustics Pergamon Press, Oxford, pp. 87–100.
Pearson, W.H., Skalski, J.R., Malme, C.I., 1992. Effects of sounds from a geophysical survey device on behaviour of captive rockfish (*Sebastes spp.*). Can. J. Fish. Aquat. Sci. 49, 1343–1356.
Peitsaro, N., Kaslin, J., Anichtchik, O.V., Panula, P., 2003. Modulation of the histaminergic system and behaviour by α-fluoromethylhistidine in zebrafish. J. Neurochem. 86, 432–441.
Peña, H., Handegard, N.O., Ona, E., 2013. Feeding herring schools do not react to seismic air gun surveys. ICES Journal of Marine Science: Journal du Conseil.
Picciulin, M., Sebastianutto, L., Codarin, A., Farina, A., Ferrero, E.A., 2010. In situ behavioural responses to boat noise exposure of *Gobius cruentatus* (Gmelin, 1789; fam. Gobiidae) and *Chromis chromis* (Linnaeus, 1758; fam. Pomacentridae) living in a marine protected area. J. Exp. Mar. Biol. Ecol. 386, 125–132.
Pohlmann, K., Grasso, F.W., Breithaupt, T., 2001. Tracking wakes: the nocturnal predatory strategy of piscivorous catfish. Proc. Natl. Acad. Sci. U. S. A. 98, 7371–7374.
Popper, A., Hastings, M.C., 2009. The effects of anthropogenic sources of sound on fishes. J. Fish Biol. 75, 455–489.
Popper, A.N., Halvorsen, M.B., Kane, E., Miller, D.D., Smith, M.E., Song, J., Stein, P., Wysocki, L.E., 2007. The effects of high-intensity, low-frequency active sonar on rainbow trout. J. Acoust. Soc. Am. 122, 623–635.
Popper, A.N., Hawkins, A.D., Fay, R.R.M., D., B., S., C., T.C., S., Ellison, W.T., Gentry, R., Halvorsen, M.B., Lokkeborg, S., Rogers, P., Southall, B.L., Zeddies, D.G., Tavolga, W.N.,

2014. ASA S3/SC1.4 TR-2014 Sound Exposure Guidelines for Fishes and Sea Turtles: A Technical Report Prepared by ANSI-Accredited Standards Committee S3/SC1 and Registered with ANSI.
Priede, I.G., Froese, R., Bailey, D.M., Bergstad, O.A., Collins, M.A., Dyb, J.E., Henriques, C., Jones, E.G., King, N., 2006. The absence of sharks from abyssal regions of the world's oceans. Proc. R. Soc. Lond. Ser. B Biol. Sci. 273, 1435–1441.
Raymond, E.H., Widder, E.A., 2007. Behavioral responses of two deep-sea fish species to red, far-red, and white light. Mar. Ecol. Prog. Ser. 350, 291–298.
Rees, H.L., Boyd, S.E., Schratzberger, M., Murray, L.A., 2006. Role of benthic indicators in regulating human activities at sea. Environ. Sci. Pol. 9, 496–508.
Richardson, W.J., Greene, C.R.J., Malme, C.I., Thomson, D.H., 1995. Marine Mammals and Noise. Academic Press, New York.
Roberts, L., 2015. Behavioural Responses by Marine Fishes and Macroinvertebrates to Underwater Noise. School of Biological, Biomedical and Environmental Sciences University of Hull, p. 278.
Roberts, L., Cheesman, S., Breithaupt, T., Elliott, M., 2015. Sensitivity of the mussel Mytilus edulis to substrate-borne vibration in relation to anthropogenically generated noise. Mar. Ecol. Prog. Ser. 538, 185–195.
Roberts, L., Cheesman, S., Elliott, M., Breithaupt, T., 2016. Sensitivity of Pagurus bernhardus (L.) to substrate-borne vibration and anthropogenic noise. J. Exp. Mar. Biol. Ecol. 474, 185–194.
Rogers, P., 2015. Parvulescu revisited: Small tank acoustics for bio-acousticians. In: Hawkins, A., Popper, A.N. (Eds.), The Third International Conference on The Effects of Noise on Aquatic Life. Springer *In Press 2015*, Budapest.
Rossington, K., Benson, T.L., P., Jones, D., 2013. Eco-hydro-acoustic modeling and its use as an EIA tool. Mar. Pollut. Bull. 75, 235–243.
Ruggerone, G.T., Goodman, S.E., Miner, R., 2008. Behavioural Response and Survival in Juvenile Coho Salmon To Pile Driving Sounds. Natural Resources Consultants, Inc. for Port of Washington, Seattle, WA.
Ryer, C.H., Stoner, A.W., Iseri, P.J., Spender, M.L., 2009. Effects of simulated underwater vehicle lighting on fish behaviour. Mar. Ecol. Prog. Ser. 391, 97–106.
Sand, O., Karlsen, H., 1986. Detection of infrasound by the Atlantic cod. J. Exp. Biol. 125, 197–204.
Sanders-Reed, J.N., 1995. Transportable Algorithm TestBed (TATB): a Software Architecture for Real-time Target Detection, Tracking, and Signature Extraction. Proceedings SPIE.
Sara, G., Dean, J.M., D'Amato, D., Buscaino, G., Oliveri, A., Genovese, S., Ferro, S., Buffa, G., Martire, M.L., Mazzola, S., 2007. Effect of boat noise on the behaviour of bluefin tuna *Thunnus thynnus* in the Mediterranean Sea. Mar. Ecol. Prog. Ser. 331, 243–253.
Schaub, A., Schnitzler, H.-U., 2007. Flight and echolocation behaviour of three vespertilionid bat species while commuting on flyways. J. Comp. Physiol. Psychol. 193, 1185–1194.
Schuijf, A., Baretta, J.W., Wildschut, J.T., 1971. A field investigation on the discrimination of sound direction in *Labrus Berggylta* (Pisces: Perciformes). Neth. J. Zool. 22, 81–105.
Schwarz, A.L., Greer, G.L., 1984. Responses of Pacific herring, *Clupea harengus pallasi*, to some underwater sounds. Can. J. Fish. Aquat. Sci. 41, 1183–1192.
Sensenig, A., Agnarsson, I., Blackledge, T.A., 2010. Behavioural and biomaterial coevolution in spider orb webs. J. Evol. Biol. 23, 1839–1856.
Shortis, M.R., Harvey, E.S., Seager, J.W., 2007. A Review of the Status and Trends in Underwater Videometric Measurement, SPIE Conference 6491. Videometrics IX, San Jose, California, USA, p. 26.
Simpson, S.D., Purser, J., Radford, A.N., 2014. Anthropogenic noise compromises antipredator behaviour in European eels. Glob. Chang. Biol. 120, 586–593.
Slabbekoorn, H., Bouton, N., van Opzeeland, I., Coers, A., ten Cate, C., Popper, A.N., 2010. A noisy spring: the impact of globally rising underwater sound levels on fish. Trends Ecol. Evol. 25, 419–427.
Smith, M., Kane, A., Popper, A., 2004. Noise-induced stress response and hearing loss in goldfish (*Carassius auratus*). J. Exp. Biol. 427-435.
SoundWaves, S., I., C., S.T., R., L., H., D.T., P.-D., R., B., M.G., D., M.J., Elliott, M., 2012. Understanding the scale and impacts of anthropogenic noise in the marine environment. Soundwaves Consortium.
Stobart, B., García-Charton, J.A., Espejo, C., Rochel, E., Goni, R., Renones, O., Herrero, A., Crec'hriou, R., Polti, S., Marcos, C., Planes, S., Perez-Ruzafa, A., 2007. A baited underwater video technique to assess shallow-water Mediterranean fish assemblages: methodological evaluation. J. Exp. Mar. Biol. Ecol. 345, 158–174.
Tasker, M.L., Amundin, M., Andre, M., Hawkins, A., Lang, W., Merck, T., Scholik-Schlomer, A., Teilmann, J., Thomsen, T., Werner, S., Zakharia, M., 2010. In: Zampoukas, N. (Ed.), Marine Strategy Framework Directive- Task Group II: Underwater Noise and Other Forms of Energy. JRC European Commssion, Luxumbourg.
Tavolga, W.N., Wodinsky, J., 1963. Auditory capacities in fishes. Pure tone thresholds in nine species of marine teleosts. Bull. Am. Mus. Nat. Hist. 126, 179–239.
Thomsen, F., Metcalfe, J., Wood, D., Gill, A.B., Muller, C., McGregor, P., 2008. Effects of Pile-driving Noise on the Behaviour of Marine Fish. CEFAS for COWRIE.
Thomsen, F., Wood, D.T., Sigray, P., Bendall, V., Metcalfe, J., Andersson, M.H., Metcalfe, J., Gill, A.B., McGregor, P.K., Mueller-Blenkle, C., 2010. Effects of Pile-driving Noise on the Behaviour of Marine Fish. COWRIE.
Tudorache, C.J., A.D., S., J.C.D., P., DeBoeck, G., Steffensen, J.F., 2009. Pectoral fin beat frequency predicts oxygen consumption during spontaneous activity in a labriform swimming fish (*Embiotoca lateralis*). Environ. Biol. Fish 84, 121–127.
Unsworth, R.K., Peters, J.R., McCloskey, R.M., Hinder, S.L., 2014. Optimising stereo baited underwater video for sampling fish and invertebrates in temperate coastal habitats. Estuar. Coast. Shelf Sci. (in press).
Van der Graaf, A.J., Ainslie, M.A., André, M., Brensing, K., Dalen, J., Dekeling, R.P.A., Robinson, S., Tasker, M.L., Thomsen, F., Werner, S., 2012. European Marine Strategy Framework Directive Good Environmental Status (MSFD-GES): Report of the Technical Subgroup on Underwater Noise and Other Forms of Energy.
Wale, M.A., Simpson, S.D., Radford, A.N., 2013. Noise negatively affects foraging and anti-predator behaviour in shore crabs. Anim. Behav. 86, 111–118.
Wardle, C.S., Carter, T.J., Urquhart, G.G., Johnstone, A.D.F., Ziolkowski, A.M., Hampson, G., Mackie, D., 2001. Effects of seismic air guns on marine fish. Cont. Shelf Res. 21, 1005–1027.
Watson, D.J., Harvey, E.S., Anderson, M.J., Kendrick, G.A., 2005. A comparison of temperate reef fish assemblages recorded by three underwater stereo-video techniques. Mar. Biol. 148, 415–425.
Weber, W.N., 2006. Dose-dependent effects of developmental mercury exposure on C-start escape responses of larval zebrafish *Danio rerio*. J. Fish Biol. 69, 75–94.
White, J., Simpfendorfer, C.A., Tobin, A.J., Heupel, M.R., 2013. Application of baited remote underwater video surveys to quantify spatial distribution of elasmobranchs at an ecosystem scale. J. Exp. Mar. Biol. Ecol. 448, 281–288.
Willis, J., 2011. Modelling swimming aquatic animals in hydrodynamic models. Ecol. Model. 222, 3869–3887.
Willis, J., Teague, N.N., 2014. Modelling fish in hydrodynamic models: an example using the Severn Barrage SEA. In: Turnpenny, A.W.H., Horsfield, A. (Eds.), International Fish Screening Techniques. WIT Press, Southampton, pp. 179–190.
Wraith, J., Lynch, T., Minchinton, T.E., Broad, A., Davis, A.R., 2013. Bait type affects fish assemblages and feeding guilds observed at baited remote underwater video stations. Mar. Ecol. Prog. Ser. 477, 189–199.
Zottoli, S., 1977. Correlation of the startle reflex and Mauthner cell auditory responses in unrestrained goldfish. J. Exp. Biol. 66, 243–254.