CSIRO PUBLISHING

RESEARCH PAPER
https://doi.org/10.1071/MF21261

MARINE & FRESHWATER RESEARCH

Baited remote underwater video sample less site attached fish species along a subsea pipeline compared to a remotely operated vehicle

T. Bond[A,B,*], D. L. McLean[A,C], J. Prince[A,B], M. D. Taylor[A,B] and J. C. Partridge[A]

For full list of author affiliations and declarations see end of paper

*Correspondence to:
T. Bond
The UWA Oceans Institute, The University of Western Australia, 35 Stirling Highway, Perth, WA 6009, Australia
Email: todd.bond@uwa.edu.au

Handling Editor:
Christine Dudgeon

Received: 7 September 2021
Accepted: 7 April 2022
Published: 18 May 2022

Cite this:
Bond T *et al.* (2022)
Marine and Freshwater Research, **73**(7), 915–930.
doi:10.1071/MF21261

© 2022 The Author(s) (or their employer(s)). Published by CSIRO Publishing.
This is an open access article distributed under the Creative Commons Attribution-NonCommercial-NoDerivatives 4.0 International License (CC BY-NC-ND).

OPEN ACCESS

ABSTRACT

Context. Remotely operated vehicles (ROVs) are routinely used to inspect oil and gas infrastructure for industry's operational purposes and scientists utilise this video footage to understand how fish interact with these structures. **Aim.** This study aims to clarify how fish abundance data obtained from ROV video compares to that collected using baited remote underwater video (BRUV). **Method.** This study compares fish assemblages observed using an industry ROV and BRUVs along a pipeline located in 130-m water depth in north-west Australia. **Key results.** Both methods recorded 22 species of fish, however each method observed 15 unique species. The fish assemblage recorded by each method was statistically different at all sites. Differences in the fish assemblages correlated with the caudal fin aspect ratio of each species: the mean caudal fin aspect ratio of fish recorded using BRUVs was 2.81, compared to 1.87 for ROV observations. **Conclusions.** We interpret this to indicate differences in site attachment, with site-attached species having generally lower caudal fin aspect ratios that are associated with slower swimming speeds with a burst and glide pattern. **Implications.** Our results show that these remote video methods predominantly sample different fish assemblages and demonstrates how different sampling methods can provide different insights into fish interactions with subsea infrastructure.

Keywords: baited remote underwater video, BRUV, caudal fin aspect ratio, fish assemblage, remotely operated vehicle, ROV, site-attachment, subsea pipeline.

Introduction

When offshore oil and gas (O&G) infrastructure reaches the end of its productive life, the relevant titleholder(s) must ensure it is decommissioned or otherwise managed in accordance with all relevant regulatory requirements. In Australia, current policy favours the full removal of all infrastructure, however, the regulator may accept alternative options if the titleholder can demonstrate that the alternative decommissioning approach delivers equal or better environmental, safety and well integrity outcomes compared to complete removal (Department of Industry, Innovation and Science 2018). Alternative decommissioning options are often evaluated using comparative assessments, which require a sound understanding of the ecosystem's functioning in the context of habitat (including artificial subsea infrastructure), and necessarily incorporating the associated assemblage of fish. Because much of Australia's North West Shelf (NWS) infrastructure is located in remote locations and at depths beyond conventional sampling methods, scientists have previously relied on video records collected by industry during routine visual inspections of infrastructure, with video obtained using industry Remote Underwater Vehicles (ROVs). Analyses of such video records has allowed researchers to describe the fish assemblages associated with such infrastructure (see Ajemian *et al.* 2015; McLean *et al.* 2017; Bond *et al.* 2018*a*; Thomson *et al.* 2018; Todd *et al.* 2019).

Downloaded from http://connectsci.au/mf/article-pdf/73/7/915/395121/mf21261.pdf by guest on 06 March 2026

ROVs fly above the pipeline filming fish that are in close proximity to it, mostly swimming around it or hiding in pipeline spans (McLean *et al.* 2017). Despite ROVs carrying lights, being noisy due to hydraulic motors and thrusters, and being a large, moving object, the behaviour of some fish appears little affected (Linley *et al.* 2013). Experiments testing stimuli independently have found that ROV sound (Popper 2007; Stoner *et al.* 2008), lighting (Trenkel *et al.* 2004; Ryer *et al.* 2009), and speed (Trenkel *et al.* 2004; Stoner *et al.* 2008) affect fish behaviour in different ways, with different fish species affected to different degrees. However, beyond experimental surveys, such complex interactions among these stimuli make it difficult to determine whether the fish assemblage recorded is representative of that occurring in the absence of the ROV.

A more common and increasingly recognised method to sample fish remotely, independent of fisheries, and without biases introduced by divers, is with baited remote underwater stereo-video systems (stereo-BRUVS; this method is herein after referred to as BRUV). BRUVs sit stationary on the seafloor and use bait to attract fishes into the field of view of the cameras with captured video recordings being used subsequently to identify, count, and measure fish sizes using the stereo aspect of the technique. BRUVs are particularly powerful for sampling carnivorous fish species often targeted by fisheries (Cappo *et al.* 2003; Harvey *et al.* 2007) while still effectively sampling herbivorous species (Harvey *et al.* 2007). Rapidly deploying a fleet of BRUVs allows scientist to sample large areas in a relatively short period of time and provides customised experimental designs which target particular habitat types.

BRUVs have been compared extensively with alternative sampling techniques, including non-baited RUV (Bernard and Götz 2012; Dorman *et al.* 2012), diver operated video (Watson *et al.* 2005, 2010; Goetze *et al.* 2015; Andradi-Brown *et al.* 2016), underwater visual census (Colton and Swearer 2009; Goetze *et al.* 2015; Lowry *et al.* 2011), towed video (Logan *et al.* 2017), and fishery dependent methods such as trawls (Priede *et al.* 1994; Cappo *et al.* 2004), traps (Priede *et al.* 1994; Harvey *et al.* 2012*b*), and longline (Santana-Garcon *et al.* 2014; McLean *et al.* 2015). Most relevant is Schramm *et al.* (2020), who investigated how relative abundance measures (MaxN) of fish collected using BRUVs compare to abundance counts of fish in a strip transect collected with a micro-ROV, diver operated video, and slow-towed video. However, no work has compared fish data collected from a workclass ROV and BRUV on a subsea pipeline.

Bond *et al.* (2018*b*, 2018*c*) used BRUVs to compare fish assemblages on and off subsea pipelines located on the NWS of Australia. Their surveys sampled fish in depths from 14 to 140 m and BRUV footage of the pipeline across this depth range demonstrated that a BRUV could be landed close to a 12-inch (~30-cm) pipeline. Despite demonstrating that BRUVs can be deployed next to a pipeline in >100-m water depth, it was clear that the fish assemblage recorded using BRUVs deployed along one pipeline was different to the fish assemblage previously described along the same pipeline from ROV video records. Bond *et al.* (2018*c*) noted that BRUVs recorded fewer site-attached species, such as *Glaucosoma buergeri* (pearl perch) and *Epinephelus areolatus* (areolate grouper), and more individuals of mobile species like *Pristipomoides multidens* (goldband snapper) and *Seriola dumerili* (greater amberjack), despite all of these carnivorous species being bait associated and caught in fish traps in the Northern Demersal Scalefish Managed Fishery (Newman *et al.* 2008). Site attachment is difficult to measure without tracking individuals. Nevertheless, the morphometry of fishes identifies their locomotion and feeding strategies, both of which could infer a level of site attachment (Bridge *et al.* 2016). For example, aspect ratio of the caudal fin is a functional trait used to infer locomotion strategy and classify fish as periodic swimmers (constantly swimming) or transient swimmers (burst and glide) (Webb 1984). Periodic swimmers have high aspect ratios, are typically fast and constantly swimming, have high stamina and metabolic rate, a fusiform body, and take food which is widely dispersed in space-time (Sharp and Dizon 1979; Palomares and Pauly 1989; Pauly 1989). Transient swimmers have low aspect ratios, tend to be slower but manoeuvrable around complex structures, prey upon locally abundant but evasive items through a burst and glide strategy, and rarely venture far from complex structure resulting in a smaller home range (Webb 1984; Sfakiotakis *et al.* 1999; Bridge *et al.* 2016). BRUVs may sample more species with periodic swimming behaviour as they search widely for food and have higher chance of encountering the BRUV during is deployment time. In comparison, ROVs may sample more transient-like swimmers which are less likely to leave the refugia of the pipeline. Furthermore, where experiments investigating stimuli (light, noise, movement, bait, etc.) on different fish species are not possible, comparing morphometry of fishes surveyed by ROV and BRUVs may also provide insight into the biases or advantages of each method.

Limited research has been undertaken to understand fish communities on the NWS of Australia, particularly in depths greater than 100 m. Nearshore waters have exceptionally high species diversity, comparable to that recorded at equivalent latitudes on the NE coast of Australia inshore from the Great Barrier Reef (McLean *et al.* 2016), whereas NWS offshore waters are fished by professional trap and line fishers, targeting valuable species such as *P. multidens*, *Lutjanus sebae* (red emperor), and *Epinephelus multinotatus* (rankin cod). From 1959 to 1990 these high-value species were targeted by foreign trawlers (Sainsbury *et al.* 1997) before declining catches and concerns of trawls removing important benthic habitats led to the exclusion of foreign trawlers, and the development of a smaller, more sustainably managed domestic fishery. Despite this reduction in effort,

Downloaded from http://connectsci.au/mf/article-pdf/73/7/915/395121/mf21261.pdf by guest on 06 March 2026

much of the sponge and epibenthic invertebrate communities had been removed by trawling, coinciding with a noted shift in the fish assemblage from high-value lethrinids (emperors) and lutjanids (snappers) to low-value nemipterids (threadin bream) and synodontids (lizardfish) (Sainsbury *et al.* 1997). The extent to which the epibenthic and fish assemblages have recovered throughout the NWS is unknown; however, Bond *et al.* (2018*c*) found the fish assemblage adjacent to the Greater Western Flank 1 (GWF1) and Echo Yodel pipelines was typified by small-bodied nemipterids and synodontids. Regardless, the provision of hard structure in this region, such as that offered by O&G installations, could encourage the re-establishment and growth of benthic macroinvertebrates and boost numbers of high-value fish species. This study compares fish assemblages observed using an industry ROV and deployed BRUVs along a pipeline located in 130-m water depth with findings important for informing future surveys. Results provide insight into the advantages and limitations of both techniques for characterising fish associated with subsea infrastructure, which has broad relevance to science and industry, as more infrastructure is decommissioned and titleholders begin comparative assessments that consider alternative options to full removal. Furthermore, we describe the fish assemblage and abundance of high-value commercial species at GWF1 pipeline and discuss how this compares to natural areas and older pipelines nearby.

Materials and methods

Study site

Installed over February and March in 2014 and located in 120–130-m water depth on the NWS of Western Australia (starts 115.88953E, 19.76199S and ends 115.92787E, 19.65158S), GWF1 is a 12-inch (~300-mm) diameter pipeline that runs 14.8 km and links Goodwyn Alpha Platform to Goodwyn and Tidepole wells (Fig. 1). GWF1 is constructed with 13% chromium welded martensitic stainless steel, coated externally with a 13.5-mm four-layer polypropylene insulation system and designed to be inherently stable during gas filled operations.

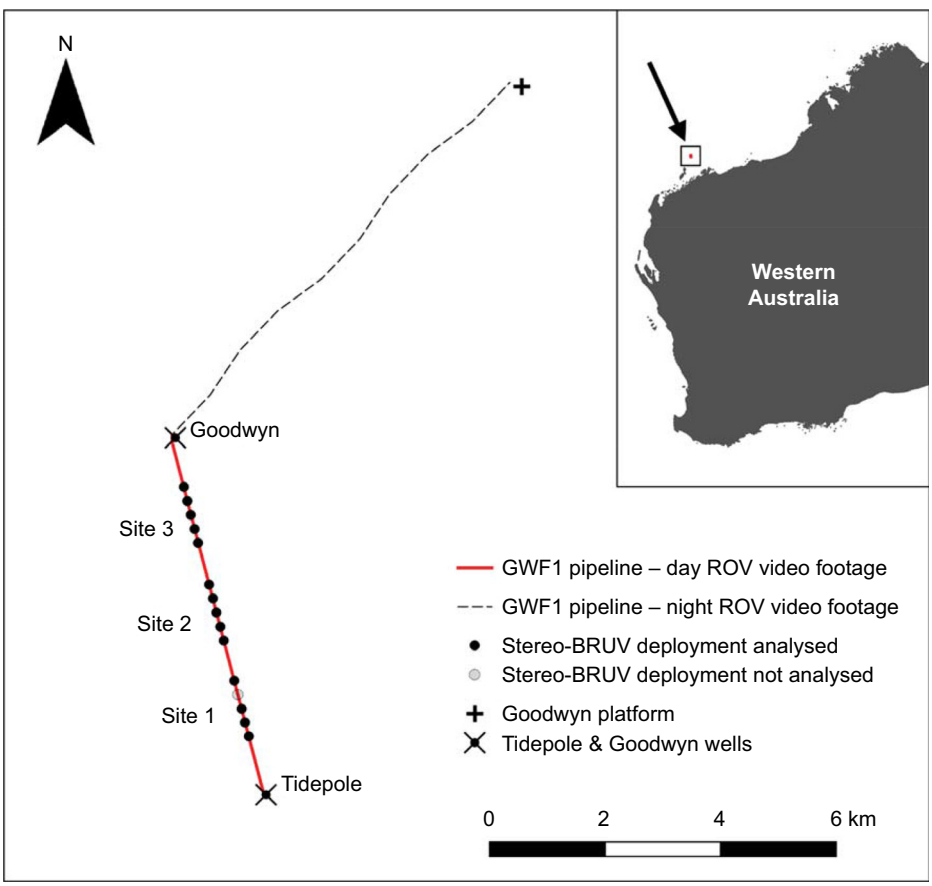

Fig. 1. The location of BRUVs deployments on GWF1 pipeline and the section of pipeline with daytime ROV video footage interrogated for this study. The hollow dot represents a BRUV that was not analysed because it over-turned.

Downloaded from http://connectsci.au/mf/article-pdf/73/7/915/395121/mf21261.pdf by guest on 06 March 2026

Sampling protocol and equipment

Baited remote underwater stereo-video

This survey was undertaken on 10 April 2017 using BRUVs deployed over the side of the research vessel, Keshi Mer II. BRUVs were deployed from the surface at three sites along the pipeline with each site possessing five replicate deployments. Replicate deployments were separated by at least 250 m to reduce the likelihood of fish swimming between BRUVs during the 1-h sampling period. It is possible that large, mobile species may be observed on multiple deployments, however, we believe that the likelihood of this occurring was low, being reduced by: (1) limited feeding on bait bags and subsequent very low bait dispersal; (2) regionally moderate seabed current speeds of ~0.128 m s^{-1}; (Leckie *et al.* 2015); (3) deploying all BRUVs in a single day, thus reducing fish moving big distances overnight, and; (4) rapid BRUV sampling with <10 min between neighbouring deployments, removing the likelihood for fish to depart one bait station for another during the periods of video acquisition. Of the three pipeline sites, one site collected only four successful replicates because one deployment over-turned and filmed vertically towards surface. The GWF1 pipeline was located from coordinates provided by Woodside Energy Ltd and confirmed onsite using the vessel's echo sounder, with the pipeline being easily identified in echo sounder images providing it was not buried. Where the pipeline could not be located using the echo sounder (two instances), a BRUV was deployed at the location provided.

Five BRUV systems were used concurrently to maximise efficiency in the field. Each BRUV comprised a pair of Canon Legria HGF25, high definition (1920 × 1080 Full HD 50i) video cameras set to record at 25 frames per second and housed in custom built housings. Cameras were ~700 mm apart with their directions of view inwardly converged by 7° to maximise the overlapping field of view. Both camera housings were mounted on a steel bar within a trapezium-shaped frame and tethered to surface buoys using rope. Further information on the design and calibration of these systems can be found in Harvey and Shortis (1995, 1998). Four steel weight bars were added to each BRUV as ballast to stop frames overturning in strong currents and a single blue LED-array light was added to provide illumination. Blue light was chosen as previous BRUV research has suggested it has a greater maximum illumination range for imaging in Western Australia waters than white light and red lights (Fitzpatrick *et al.* 2013). Each BRUV was baited with ~1 kg of crushed pilchards (*Sardinops* spp.) contained within a plastic-coated wire mesh bait bag, positioned 1.2 m in front of the camera. Sampling was undertaken during daytime hours (between at least 1 h after sunrise and completed at least 1 h before sunset) to record as many fish species and individuals as possible (Harvey *et al.* 2012*a*; Myers *et al.* 2016; Bond *et al.* 2018*a*). Each BRUV was left to record on the seafloor for a minimum of 60 min. Resulting video records from left and right cameras were downloaded, converted to .AVI format (Xilisoft Video Convert Ultimate, Xilisoft Corporation) and analysed using the program EventMeasure Stereo (SeaGIS). All BRUVs were calibrated pre- and post-fieldwork using the CAL program (SeaGIS) allowing accurate determination of the sample area.

Remotely operated vehicle video

ROV video records were obtained during routine industry inspection of GWF1 using a work class ROV (Fugro FCV 3083) in 'pipeline mode'. Three cameras included a central, forward-facing camera mounted high on the ROV, and two boom cameras that extended to the port and starboard side of the ROV and filmed a side-view of the pipeline and underneath spans.

Inspection operations started at 'kilometre point' (KP) = 0.000 where the pipeline first receives gas and ended at the Goodwyn Alpha Platform (KP = 14.8). The ROV survey took ~53 h, commencing at 23:30 on 18 February 2017 and concluding at 04:11 on 21 February 2017. Only video obtained during daytime hours (between 1 h after sunrise and 1 h before sunset) was comparable to BRUVs, because the abundance and species diversity of fish on a pipeline has been shown to change between night and day (Bond *et al.* 2018*a*). Consequently, only ROV video obtained between KP 0.680 and 5.540 was used in this study (i.e. a 4.6-km stretch of the pipeline).

ROV video was provided by Woodside Energy Ltd as 15-min video packets in .MPEG file format for three ROV camera views: port, centre, and starboard. Each video was recorded as 25 frames per second and measured 720 × 576. Before importing into EventMeasure Stereo (SeaGIS), video footage was converted to .AVI format in Xilisoft Video Convert Ultimate and files corresponding to the three views were set side by side and merged into a single (2160 × 576), synchronised file using Adobe Premier Pro (ver. CS4, Adobe Systems; Fig. 2). Short, 5-m transects were sampled within the 4.6-km section of pipeline with each transect separated by a 10–15-m gap, following methods described by McLean *et al.* (2017).

Fish annotation from video

Relative abundance of fish recorded using BRUVs was determined as the maximum number of individuals present of each species at a single point in time (Priede *et al.* 1994; Cappo *et al.* 2004) within 60 min of the BRUV reaching the seafloor. Only fish within 4 m of the cameras were counted as determined by the penetration of artificial blue light to illuminate fish. The distance of each fish from the cameras was checked using the stereo configuration of the cameras and EventMeasure Stereo software. The dispersal of the bait plume from a BRUV is unknown, which results in an undefined area of attraction. As such, abundance is relative to other BRUVs and the absolute density of fish cannot be

Downloaded from http://connectsci.au/mf/article-pdf/73/7/915/395121/mf21261.pdf by guest on 06 March 2026

Fig. 2. Screenshot of the typical ROV video display with port, centre, and starboard screens stitched together from left to right to form an image 2160 × 576 pixels in size.

determined. For ROV video footage, all fish within each 5-m transect were counted and identified to their lowest taxonomic unit. Some individuals could not be identified to species level and were lumped to genus or family, including: Bothidae (flounder), *Decapterus* spp. (scad), *Nemipterus* spp. (threadfin bream), and 'small unidentifiable species'. Small unidentifiable species most likely included apogonids (cardinal fish) and larval fish too small to identify to family.

Data analysis

Examination of differences in fish assemblage composition, species richness, total abundance, and fish caudal fin aspect ratio measured between BRUVs and ROV was undertaken with a two-factor design: Method ('Method', fixed, two levels – BRUV and ROV) and Site ('Site', random, three levels – S1, S2, and S3). Data were analysed using a permutational analysis of variance (PERMANOVA) in the PRIMER-E statistical software package (ver. 6, PRIMER-E Ltd, Plymouth, UK; Clarke and Gorley 2006) using the PERMANOVA+ add on (ver. 1.0.8, PRIMER-E Ltd, see www.primer-e.com; Anderson *et al.* 2008). For multivariate abundance data, a Modified Gower $\log_{10}$ dissimilarity matrix was computed using non-transformed abundance data and 9999 permutations were iteratively computed to obtain a *P*-value for factors *Method* (fixed), *Site* (random) and the interaction term *Method* × *Site*. A Modified Gower dissimilarity matrix was chosen because it does not count joint absences as similarities and emphasises differences in abundance (Anderson *et al.* 2011). For univariate analyses on species richness and total fish abundance, the same tests were undertaken using Euclidean distance matrices computed using non-transformed data. Pairwise tests were undertaken where significant results were found. All *small unidentified species* and *Epinephelus* sp10 were removed from the data before univariate and multivariate analysis. *S. dumerili* were removed from all analyses because they followed the ROV and would likely, therefore, have been recounted.

A principal coordinate ordination (PCO) was used to construct an unconstrained ordination and investigate the spatial separation of samples collected by each method. Individual species that were likely responsible for any of the observed difference were identified by examining Pearson correlations of their relative abundance with PCO axes. A Pearson correlation of $|R| \geq 0.5$ was used as an arbitrary cut-off to display potential relationships between individual species and the axes. Species accumulation curves were produced using the vegan package (ver. 2.5-6, Oksanen, F. G. Blanchet, M. Friendly, R. Kindt, P. Legendre, D. McGlinn, P. R. Minchin, R. B. O'Hara, G. L. Simpson, P. Solymos, M. H. H. Stevens, E. Szoecs, and H. Wagner, see https://cran.r-project.org/web/packages/vegan/) and the method 'rarefaction' which randomly samples the pool of transects multiple times to display the mean number of species found in each transect.

The aspect ratio of the caudal fin is described by the equation:

$$A = \frac{h^2}{s}$$

where h is the height (cm) of the caudal fin and s is its surface area (cm^2; Westneat and Wainwright 2001). Aspect ratio data were obtained using the R package 'rfishbase' (see https://CRAN.R-project.org/package=rfishbase; Boettiger *et al.* 2012). Morphometric data for *H. dampieriensis*, *Ophichthus lithinus* (Evermann's snake eel), and *Rhynchobatus australiae* (whitespotted guitarfish) were absent and data on similar species were also not available. *Bodianus perditio* was used as a substitute for *B. solatus* and *Nemipterus furcosus* was used for *Nemipterus* spp. Mean AR was calculated when more than one value was available for a species and these data are presented in Supplementary Table S1.

Results

A total of 15 BRUV deployments were made, of which 14 were successful and 1 was not analysed because it overturned. The pipeline was visible on the vessel's echo sounder for 86% of

Downloaded from http://connectsci.au/mf/article-pdf/73/7/915/395121/mf21261.pdf by guest on 06 March 2026

deployments and, although not seen in any video recordings, BRUV locations are expected to have been in close proximity (<~50 m) to the pipeline. In total, 171 fish from 22 species were observed using BRUVs. A total of 298 ROV transects were analysed from which 17 027 fish were recorded. Of these, 16 440 (97%) fish were small unidentifiable species and 21 were unidentifiable fish longer than 20 cm. Excluding these unidentifiable individuals, 566 individuals comprising 22 species were identified from ROV video records. In more than 75% of ROV transects (n = 227) no fish were recorded. When considering identifiable fish, fifteen species were recorded only from BRUV deployments and 15 species were unique to ROV transects.

The five most ubiquitous fish recorded using BRUV were: *Nemipterus* spp. (occurred on 86% of BRUV deployments), *A. spinifer* (71%), *Lagocephalus lunaris* (lunar pufferfish; 71%), *P. multidens* (64%), and *Decapterus* spp. (57%). The five most ubiquitous fish recorded using ROV included small unidentifiable species (25% of ROV transects; not considered in any further analysis), *E. areolatus* (7%), *L. malabaricus* (7%), *G. buergeri* (6%), and *L. russellii* (6%).

Commercially important species identified and recorded during the survey included species caught and retained by commercial trap fishers that operate in the vicinity of the pipeline (McLean *et al.* 2017; Gaughan *et al.* 2019): *Argyrops spinifer* (frypan snapper), *Bodianus solatus* (sunburnt pigfish), *Carangoides caeruleopinnatus* (onion trevally), *Carangoides chrysophrys* (longnose trevally), *Caranx ignobilis* (giant trevally), *Caranx papuensis* (brassy trevally), *Epinephelus amblycephalus* (banded grouper), *E. areolatus*, *G. buergeri*, *Hapalogenys dampieriensis* (Australian striped velvetchin), *Lethrinus nebulosus* (spangled emperor), *Lutjanus malabaricus* (saddletail snapper), *Lutjanus quinquelineatus* (five-lined snapper), *Lutjanus russellii* (Moses' snapper), *L. sebae* (red emperor), *Lutjanus vitta* (brownstripe snapper), *P. multidens*, and *S. dumerili*. Multivariate tests returned significant differences for the interaction term *Method* × *Site* and single factor *Site*, but not *Method* (Table 1). Pairwise tests revealed that Site 2 was significantly different from Sites 1 and 3 in ROV records, this being the most likely cause for significance in the interaction term. Pairwise tests for *Method* within each *Site*, revealed significant differences in the fish assemblages (Table 2), suggesting that within a *Site* each method recorded video of a different fish assemblage.

Univariate analysis of species richness data revealed significant difference for both factors and the interaction term (Table 1). Pairwise tests returned the same results as the fish assemblage data: different by *Method* within each *Site*, with Site 2 being different from the other sites for ROV (Table 2). BRUVs recorded more species at Site 1 (12) and Site 3 (14) compared to ROV (9 and 10 respectively), but fewer at Site 2 (10) compared with the ROV (17). Within the ROV dataset, Site 2 had a higher average species richness per transect (0.90 ± 0.18) compared to Site 1 (0.24 ± 0.07) and Site 3 (0.13 ± 0.07).

Univariate analysis of AR data revealed significant difference for both factors and the interaction term (Table 1). The most common fishes recorded by BRUVs had larger ARs compared to fish recorded using the ROV (Fig. 3). Species recorded using ROV had a range in AR, from 1.10 (*Pterois volitans*; red lionfish) to 4.52 (*C. chrysophrys*) compared to BRUV which ranged from 1.47 (*L. malabaricus*) to 4.52 (*C. chrysophrys*; Fig. 3). The mean AR of all fish recorded using BRUV was 2.81 ± 0.06 s.e. and higher than that recorded using the ROV (1.87 ± 0.02 s.e.; Fig. 4). The mean AR of species recorded using BRUV was 2.63 ± 0.24 s.e. compared to 2.28 ± 0.24 s.e. using ROV. Pairwise tests returned the same results as the fish assemblage data and species richness at a *Site* level: different by *Method* within each *Site*, with Site 2 being different from the other sites for ROV (Table 2). Aspect ratio of the caudal fin of fish recorded using BRUV at Site 2 and Site 3 were statistically different but not different for other combinations of sites (Table 2). Site 3 had higher abundance of *C. chrysophrys* (n = 14; AR = 4.52) compared to Site 1 (n = 4) and Site 2 (n = 1). Unlike fish assemblage data and species richness, no difference was recorded by using ROV between sites (Table 2).

A PCO plot of the fish assemblage showed the greatest separation in samples by the factor *Method* across the PCO2 axis (Fig. 5). That is, there was a much larger distinction between the fish assemblage surveyed by ROV and by BRUV than differences among sites. Separation of samples collected using ROV were largely determined by the abundance of *G. buergeri*, *L. russellii*, *L. malabaricus*, and *E. areolatus* (Fig. 5). BRUV data were different across the PCO2 axis and their separation correlated with the abundance of four species: *C. chrysophrys*, *L. lunaris*, *Nemipterus* spp., and *A. spinifer* (Fig. 5).

Species accumulation (rarefaction) curves for each method do not reach asymptotes (Fig. 6) suggesting more sampling on the remaining sections of pipeline would need to occur to document all species interacting with the GWF1 pipeline. Although sample units from each method are not directly comparable, sampling the same length of pipeline with each method returns a similar shaped curve.

Of the 17 commercial fish species identified in this study, 14 were recorded using ROV and 9 were recorded on BRUVs (Table 3). Three commercially targeted species were unique to BRUV (*A. spinifer*, *C. papuensis* and *P. multidens*) and eight were unique to ROV (*B. solatus*, *E. amblycephalus*, *G. buergeri*, *H. dampieriensis*, *L. nebulosus*, *L. quinquelineatus*, *L. russellii* and *L. vitta*). Interestingly, 129 *G. buergeri* and 82 *L. russellii* were recorded using ROV and no individuals of either species were recorded by BRUV. Conversely, BRUVs recorded 35 *P. multidens* and 15 *A. spinifer* and ROV recorded no individuals of either of these two species.

Downloaded from http://connectsci.au/mf/article-pdf/73/7/915/395121/mf21261.pdf by guest on 06 March 2026

Table 1. Results of PERMANOVA based on Modified Gower $\log_{10}$ dissimilarities of multivariate abundance data (fish assemblage) and on Euclidean distance dissimilarities of total abundance of fish (all species summed), species richness, and AR data in response to the factor method and site.

Source	d.f.	Fish assemblage				Total abundance				Species richness				Aspect ratio of caudal fin			
		MS	Pseudo-*F*	P_{perm}	Unique perms	MS	Pseudo-*F*	P_{perm}	Unique perms	MS	Pseudo-*F*	P_{perm}	Unique perms	MS	Pseudo-*F*	P_{perm}	Unique perms
Method	1	11.24	17.6	0.10	360	1602.8	41.11	**0.04**	359	428.49	41.98	**0.02**	354	68.54	38.07	**0.03**	360
Site	2	0.68	2.88	**0.03**	9934	78.17	3.49	0.08	9900	10.21	7.71	**<0.01**	9933	2.11	7.01	**<0.01**	9948
Method × site	2	0.64	2.72	**0.03**	9333	39.07	1.75	0.18	9893	10.25	7.75	**<0.01**	9954	1.91	6.38	**<0.01**	9957
Residual	306	0.24				0.53				0.96				0.30			
Total	311																

$P_{perm} < 0.05$ are identified in bold.

Table 2. Pairwise test results for the fish assemblage abundance data, species richness, and AR for all pairs within site and method.

Level	Groups	Fish assemblage		Species richness		Aspect ratio of caudal fin	
		t	P_{perm}	*t*	P_{MC}	*t*	P_{perm}
Site 1	BRUV *v.* ROV	4.92	**<0.01**	18.16	**<0.01**	7.03	**<0.01**
Site 2		3.06	**<0.01**	6.17	**<0.01**	17.28	**<0.01**
Site 3		6.12	**<0.01**	13.26	**<0.01**	4.80	**<0.01**
BRUV	Site 1 *v.* Site 2	1.41	0.34	1.41	0.20	1.77	0.08
	Site 1 *v.* Site 3	2.07	0.10	2.07	0.08	1.64	0.10
	Site 2 *v.* Site 3	0.85	0.08	0.85	0.42	3.14	**<0.01**
ROV	Site 1 *v.* Site 2	3.72	**<0.01**	3.72	**<0.01**	0.31	0.76
	Site 1 *v.* Site 3	1.11	0.10	1.12	0.26	0.32	0.76
	Site 2 *v.* Site 3	3.93	**<0.01**	3.93	**<0.01**	0.36	0.71

P_{MC} are *P* values based on Monte Carlo bootstrapping and were used for species richness, where the number of unique permutations was <100. Please insert a table note: $P_{perm} < 0.05$ are identified in bold.

Downloaded from http://connectsci.au/mf/article-pdf/73/7/915/395121/mf21261.pdf by guest on 06 March 2026

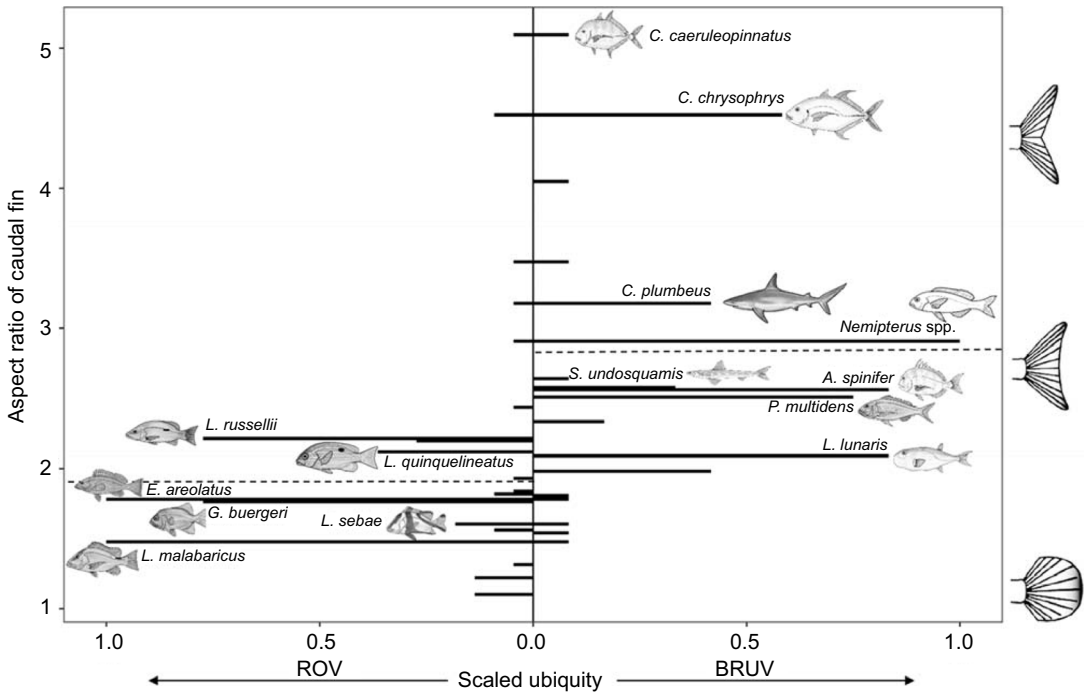

Fig. 3. Scaled ubiquity of fish species recorded on GWF1 with ROV and BRUV and each species corresponding caudal fin aspect ratio. The mean aspect ratio of the caudal fins for fishes recorded on BRUV is higher than that recorded on ROV video footage (dashed line). Ubiquity (number of samples that recorded each species) values are rescaled between 0 and 1 using the minimum and maximum ubiquity calculated for each method. ROV data are displayed to the left and BRUV to the right. Aspect Ratio values for each species were obtained using the R package 'rfishbase' (see https://CRAN.R-project.org/package=rfishbase; Boettiger *et al.* 2012) and are the same as those provide on FishBase (see www.fishbase.org). Examples of tails adapted from Yamaguchi *et al.* (2018).

Discussion

This work begins to address one of the suggestions from McLean *et al.* (2017) and Bond *et al.* (2018*a*) by providing the first method comparison in which BRUV and ROV video records were used to understand the fish assemblage associated with a subsea pipeline. Although the total number of species recorded using each method was the same (22 species) and no significant differences were detected in the total abundance of fish, each method recorded a significantly different fish assemblage at each site. BRUVs recorded more mobile species with higher AR like *C. chrysophrys*, *P. multidens*, *Nemipterus* spp., *A. spinifer*, and puffers, *L. lunaris* and *Lagocephalus sceleratus* (silver toadfish), whereas the ROV recorded species that are less mobile with lower AR, including *G. buergeri*, *E. areolatus* and lutjanids (*L. malabaricus*, *L. russellii*, *L. quinquelineatus* and *L. sebae*).

BRUV *v.* ROV fish assemblage

BRUVs have been compared extensively with alternative sampling techniques, however, this is the first study to compare fish data collected using a workclass ROV and BRUV on a subsea pipeline. Here, BRUVs and the ROV sampled a distinctly different fish assemblage and, coincidently, 15 unique species were recorded by each method out of the total 22 species by each method. Many of these unique species included single observations, but others were highly abundant. *Nemipterus* spp. and *P. multidens* were the two most abundant species recorded using BRUVs, but none were recorded using ROV. Conversely, *G. buergeri* and *L. russellii* were the two most abundant species recorded on ROV video footage and none were recorded using BRUVs. This comparison demonstrates that no single method samples all the species observed and that a combination of BRUV and ROV should be used to sample the most species. This is consistent with work by Schramm *et al.* (2020), who identified ~10% increase in the number of species when BRUV is complimented with a transect based survey such as ROV. Although it is not unusual to see differences in the fish assemblage recorded using different visual sampling technique (Watson *et al.* 2005; Langlois *et al.* 2010; Logan *et al.* 2017), such major differences using visual techniques is rare.

Attractants and deterrents

BRUVs and ROVs have clear methodological differences, including the use of bait in BRUVs. BRUVs recorded high

Downloaded from http://connectsci.au/mf/article-pdf/73/7/915/395121/mf21261.pdf by guest on 06 March 2026

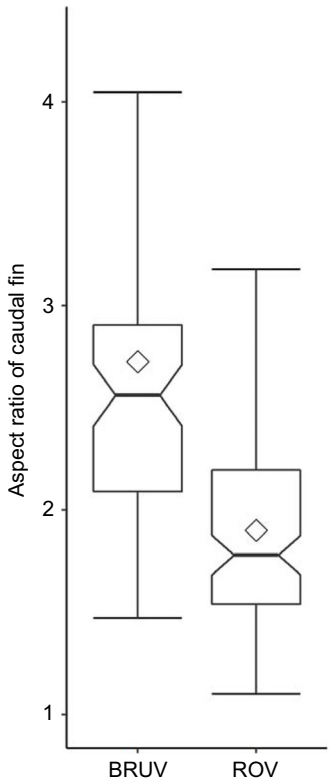

Fig. 4. Comparisons of the mean (diamonds) and median (dashes) caudal fin aspect ratio of all fish recorded using BRUV and ROV video records. The upper and lower hinges represent the first and third inter quartiles (IQR; 25th and 75th percentiles) and the whiskers represent the largest value and smallest values no further than 1.5 times the IQR. Notches extend 1.58 times the IQR ÷ sqrt(*n*), or ~95% confidence interval. Notches in each box do not overlap, proving evidence that the medians differ (Chambers *et al.* 2018).

abundances of *P. multidens*, *A. spinifer*, and *Nemipterus* spp., species that were not recorded on ROV video footage. These species are generalist carnivores with high trophic levels identified in FishBase (R. Froese and D. Pauly, see www.fishbase.org) records (*P. multidens* = 3.8 and *A. spinifer* = 4.5) likely attracted to the bait. However, the ROV also recorded high abundance of generalist carnivores, many of which were not recorded using BRUVs or were recorded in relatively low abundance (see Table 3), including; *G. buergeri*, *L malabaricus* (trophic level = 4.5), *E. areolatus* (3.7), and *L. russellii* (4.1). Traditionally, survey techniques that use bait show significant differences in fish assemblage composition driven by increases in the relative abundance of fish in baited compared to non-baited samples (Cappo *et al.* 2004; Harvey *et al.* 2007; Watson *et al.* 2010; Hardinge *et al.* 2013). Here, it is clear some species are attracted to the bait on BRUVs, but other attractants or deterrents may also be contributing to differences in abundances of certain species between BRUV and ROV video records.

Fish behaviour is also altered by the lighting (Trenkel *et al.* 2004; Ryer *et al.* 2009), sounds (Popper 2007; Stoner *et al.* 2008), and speeds (Trenkel *et al.* 2004; Stoner *et al.* 2008) of underwater vehicles with bias differing among species. The ROV used in this survey had eight 600 Watt lights and two 24 Volt Direct Current light-emitting diodes, a hydraulic motor with seven 15 inch propellers, and was guided along the top of the pipeline by two plastic rollers. This combination of lights, movement, and sound create a complex array of stimuli that would likely elicit a variety of behavioural responses for different fish species. *P. multidens* and *A. spinifer* have been recorded on video recordings collected by ROV before (McLean *et al.* 2017; Bond *et al.* 2018*a*), but in low abundance. Bond *et al.* (2018*c*) described a disparity in the abundance of these two species recorded on BRUVs compared to previous ROV work at Echo Yodel (EY) pipeline; a pipeline with the same diameter as GWF1 and in close proximity to this study. The results presented here support results from Bond *et al.* (2018*b*, 2018*c*), confirming that *P. multidens* and *A. spinifer* interact with pipeline infrastructure on the NWS, despite their absence or low abundance recorded on ROV video records at the same locations (McLean *et al.* 2017; Bond *et al.* 2018*a*). We suggest that the low abundance of these species recorded on ROV video records by Bond *et al.* (2018*c*) is likely due to the sound, movement or vibration of the ROV, but targeted experiments testing species-specific responses to these stimuli are needed if the reactions of different fish species to different sensory stimuli is to be understood. Currently, we are unable to 'normalise' fish abundance data to compensate for the sensory attributes of different ROVs, or even data from ROVs and BRUVs more broadly.

Although some species may be deterred by the lights, sound or movement of the ROV, others may be attracted to it. *S. dumerili*, for instance, followed the ROV for much of the survey, making it difficult to determine the true abundance of this species. Fish and sharks circling ROVs were previously noted by Baker *et al.* (2012), Patterson *et al.* (2008) and Trenkel *et al.* (2004) described how cutthroat eels were attracted to a stationary ROV. In this study, *S. dumerili* appeared to follow the ROV and fed on items disturbed by the ROV. Video analysts reviewing the ROV video footage recorded the first occurrence of *S. dumerili* and the maximum number of individuals seen at a single point in the same transect. Additional individuals were added in subsequent transects if the total number increased. If three transects passed without seeing any *S. dumerili*, all individuals observed in the following transect were recorded, the assumption being that these were new individuals rather than previously observed followers. We believe this method did not accurately measure the absolute number of individual *S. dumerili* associated with GWF1, resulting in the removal of this species from analyses. We suspect

Downloaded from http://connectsci.au/mf/article-pdf/73/7/915/395121/mf21261.pdf by guest on 06 March 2026

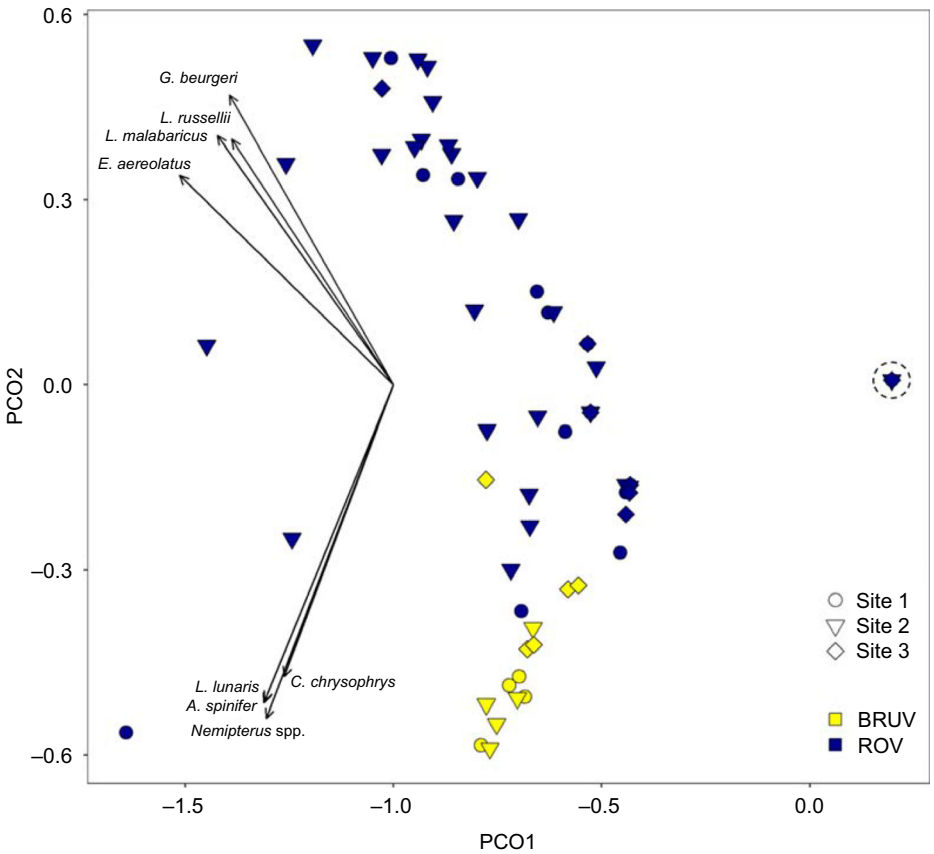

Fig. 5. PCO plot using the relative abundance of fish. Species with a modular Pearson correlations of $|R| > 0.5$ to either axis overlaid, with vector length indicating the strength of the correlation and the direction in which each species is shaping the distribution of samples. Samples circled with a dashed line ($n = 227$) recorded no fish and were all sampled by ROV.

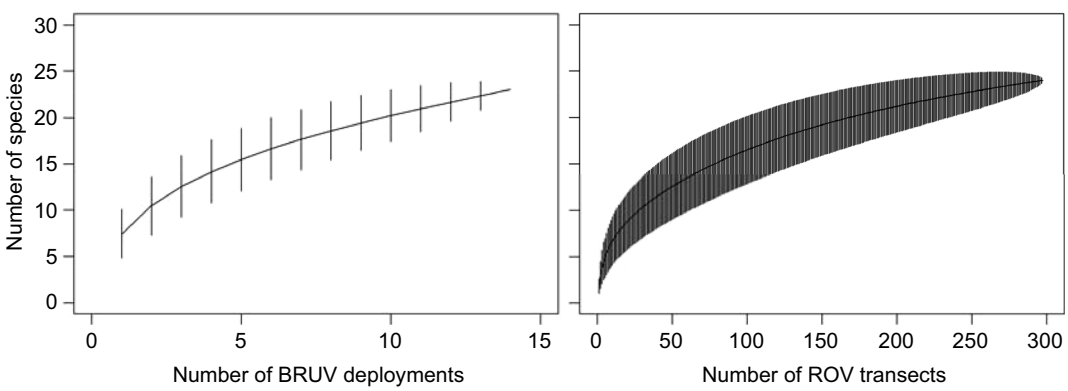

Fig. 6. Species accumulation (rarefaction) curves for each method show the same shaped curves despite samples units not being comparable. Both curves have not reached asymptote, suggesting more sampling is needed to understand the entire fish assemblage. Interestingly, each method recorded 15 unique species.

the same six *S. dumerili* continuously followed the ROV for the entire survey but were only filmed in a few instances. We suggest a more conservative, but accurate method to determine their abundance. For example, a MaxN measurement could be adopted for mobile species like sharks and carangids, whereby only one transect with the highest number of individuals is considered in analyses. Alternatively, analysts could follow the methods employed

Downloaded from http://connectsci.au/mf/article-pdf/73/7/915/395121/mf21261.pdf by guest on 06 March 2026

Table 3. Abundance and commonality (percentage of deployments or transects) of commercial fish species recorded on the GWF pipeline using BRUV and ROV.

	Common name	Commonality (percentage of deployments or transects)		Total abundance (summed across deployments or transects)	
		BRUV	ROV	BRUV	ROV
Argyrops spinifer	Frypan snapper	71		15	
Bodianus solatus	Sunburnt pigfish		1		4
Carangoides caeruleopinnatus	Onion trevally	7		1	1
Carangoides chrysophrys	Longnose trevally	50	1	19	3
Caranx ignobilis	Giant trevally	7		1	1
Caranx papuensis	Brassy trevally	7		1	
Epinephelus amblycephalus	Banded grouper				1
Epinephelus areolatus	Areolate grouper	7	7	1	28
Glaucosoma buergeri	Pearl perch		6		129
Hapalogenys dampieriensis	Australian striped velvetchin		1		5
Lethrinus nebulosus	Spangled emperor				1
Lutjanus malabaricus	Saddletail snapper	7	7	3	67
Lutjanus quinquelineatus	Five-lined snapped		3		18
Lutjanus russellii	Moses' snapper		6		82
Lutjanus sebae	Red emperor	7	1	1	6
Lutjanus vitta	Brownstripe snapper		2		17
Pristipomoides multidens	Goldband snapper	64		35	

by Baker *et al.* (2012), who excluded all fish that approached the field of view from behind the ROV.

The *small unidentifiable species* reported here are common in research projects using ROV to survey oil and gas infrastructure in north Western Australia and most commonly reported as Apogonidae spp. (see McLean *et al.* 2017, 2018; Bond *et al.* 2018*a*, 2018*b*). Their identity is not known but likely consists of multiple species or families, and their presence and abundance are poorly understood. Bond *et al.* (2018*a*), reported diel changes in the abundance of Apogonidae sp. residing on pipeline infrastructure; apogonids reside on pipeline infrastructure during the day and move off it at night. McLean *et al.* (2017) found no conclusive seasonal changes in the abundance of these small fish, but suggested they could be larval fish. We acknowledge that, on paper, the abundance of small unidentifiable fish reported here is immense and disproportionate to other species. Consequently, we removed them from all statistical analyses because we do not fully understand the ecological or methodological reasons for their presence and abundance. It is important that future research investigates how ROVs and lights affect the presence and abundance of these small fish, and if possible, collect samples to identify the animals to species.

Site attachment and caudal fin aspect ratio

The effectiveness of survey methods that use bait is determined by the behaviour of the target animals, notably their activity rhythms, feeding motivation, and sensory and locomotor abilities (Stoner 2004). As generalist carnivores, the feeding motivation and bait affiliation of *G. buergeri*, *L. malabaricus*, *L. quinquelineatus*, and *E. areolatus* is considered high, but BRUVs recorded very low abundances of these species relative to the ROV video transects. Despite being generalist carnivores, the feeding motivation of these species may change with their activity rhythm. Bond *et al.* (2018*a*) described the activity rhythms of these species at a pipeline nearby to GWF1, noting peak abundance during daytime hours. These peaks in abundance were thought to reflect feeding times, with these species of fish leaving the pipeline at night to feed in the surrounding areas. If this pattern does reflect an activity rhythm of feeding behaviour, it would suggest some species have low feeding motivation during the day, and thus they are less willing to leave the pipeline to explore a feeding opportunity at a BRUV, even if nearby. Additionally, some species might prefer not to leave the pipeline at all, adopting a sit-and-wait approach to prey capture.

In fish, site attachment is difficult to measure without tracking individuals, however, the morphometry of fish can

Downloaded from http://connectsci.au/mf/article-pdf/73/7/915/395121/mf21261.pdf by guest on 06 March 2026

infer their locomotion and feeding strategy (Sharp and Dizon 1979; Webb 1984; Pauly 1989), both of which could infer a likely home range or level of site attachment (Bridge *et al.* 2016). The mean caudal fin aspect ratio (AR) of fish recorded using BRUVs (2.81 ± 0.06) was statistically different from than that recorded using ROV (1.87 ± 0.02). Fish with higher ARs such as those recorded using BRUV (e.g. *C. chrysophrys* and *Nemipterus* spp.) are typically fast and constantly swimming, have high stamina, and known as periodic swimmers. Whereas low AR species such as those recorded using ROV (e.g. *E. areolatus* and *G. buergeri*) tend to be slower and adopt a burst-and-glide action, and are known as transient swimmers. Moreover, body form and locomotion are linked to feeding strategy: periodic swimmers take food which is widely dispersed in space–time, and transient swimmers prey upon locally abundant but evasive items (Sfakiotakis *et al.* 1999; Webb 1984). As previously discussed, the fish assemblage recorded using BRUVs had higher abundance of *P. multidens* and *A. spinifer* with few *E. areolatus*, and no *G. buergeri* or *L. russellii*. *P. multidens* and *A. spinifer* have AR values of 2.51 and 2.56 respectively and are ranked in the top ten species with the highest AR recorded in this study. Conversely, the ROV video recorded relatively high abundance of *E. areolatus* and *G. buergeri*, both species classified as more transient swimmers with AR values of 1.76 and 1.78 respectively. Despite differences in ARs of fishes recorded between survey techniques, it is difficult to decipher whether these differences are due to fish species' feeding strategies and bait affiliations or to their ability to detect the bait plume and swim to its source.

Ideally, for BRUVs to work most effectively, fish sense the bait plume, decide to follow it and swim into the field of view before the BRUV is retrieved. However, species-specific differences in fish behaviour and locomotion will undoubtedly affect which species are recorded and their estimated abundances. Here, the most mobile species (e.g. *C. caeruleopinnatus* and *C. chrysophrys*) would be able to traverse the 250-m separation distance between neighbouring BRUVs and be counted more than once, thus inflating their numbers on BRUVs relative to ROVs. However, for reasons stated previously, this was deemed unlikely in the present study. Collins *et al.* (1999) and Bailey and Priede (2002) described how the arrival times of fish to bait was reduced for fish that can swim faster. A strong influence on swimming speed is a fish's caudal fin aspect ratio (Sambilay 1990; Fisher and Hogan 2007). The species recorded using the ROV had a low aspect ratio, compared to those recorded on BRUVs which had a larger range in aspect ratio, but also ARs mostly larger than those recorded on ROV. We do not suggest that fish absent from BRUV data could not swim fast enough to be recorded, rather their vagility, as a consequence of feeding motivation, activity rhythm, and inherited locomotion ability (caudal fin aspect ratio) results in them taking more time to approach the BRUV. To pursue this idea further, we recommend investigating whether longer BRUV soak times result in recordings of more species, particularly those fishes with low AR that seem more closely associated with the pipeline structure.

Finally, using AR to help explain differences between data recorded by each survey technique may also help explain differences recorded at a site level. Within ROV samples, Site 2 was statistically different from the Site 1 and 3 in terms of the composition of fish and species diversity but this difference was not detected using BRUVs. Because BRUVs sample fish with higher AR that roam further, changes in a fish assemblage recorded over a small spatial scale may not be evident with this approach. Here, the ROV recorded fish with smaller AR values, these being species that likely roam less, which allowed the ROV to detect small changes in fish assemblages along the pipeline.

Important commercial species

Understanding how commercial species interact with subsea infrastructure, and if this interaction is recorded differently dependent on the method used, is important for fisheries management and in informing decommissioning decisions for the NWS where the value of subsea infrastructure to fishers may be a component of decision making. The GWF1 falls within the Pilbara Trap Fishery and the Pilbara Line Fishery as part of the Northern Demersal Scalefish Managed Fishery and primarily targets high-value species such as *P. multidens* and *L. sebae* (Gaughan *et al.* 2019). *L. sebae* were recorded on BRUV and ROV video footage but, as discussed, the ROV recorded *L. sebae* more often than BRUVs. *P. multidens* was only recorded on BRUV records and was the second most abundant species (35 individuals), after *Nemipterus* spp. (38 individuals) recorded this way. Both species were recorded on pipelines nearby in studies using ROV (McLean *et al.* 2017; Bond *et al.* 2018*a*) and BRUVs (Bond *et al.* 2018*b*, 2018*c*), although, as previously mentioned, studies using ROV have noted abundances of *P. multidens* were much lower than expected. Differences in the abundance of *P. multidens* and *L. sebae* between methods is likely due to avoidance of the ROV by these species. As discussed, noise, lights, and movement from underwater vehicles have been shown to scare away some species (Trenkel *et al.* 2004; Popper 2007; Ryer *et al.* 2009), which is the suspected cause, here. We suggest future work is needed to understand behaviour interactions of commercial species with underwater vehicles used to survey infrastructure, particularly to understand species' different responses to stimuli such as lighting, noise, and movement.

Although lengths of fish were not used in this comparison, the stereo aspect of BRUVs can provide valuable length data of commercial species, something which is not collected during routine industry inspections of offshore infrastructure using

Downloaded from http://connectsci.au/mf/article-pdf/73/7/915/395121/mf21261.pdf by guest on 06 March 2026

ROVs. Lengths are used to calculate the biomass of each fish and the 'catch value' for each BRUV deployment (Bond *et al.* 2018*d*). These data can assist decision makers to calculate the 'value' of infrastructure fishers, relative to surrounding areas of natural habitat and help inform decisions on decommissioning options. It would, therefore, be useful if industry ROV operators considered the addition of bespoke stereo-video camera systems to enhance ROV capability.

Location of BRUV samples

Successfully deploying and retrieving BRUVs in depths greater than 100 m requires a sound understanding of ocean processes and conditions (wind, currents and waves). Unlike Bond *et al.* (2018*b*, 2018*c*), the pipeline was not visible on any BRUV footage including those from rear facing cameras specifically used to identify the presence of the pipeline. It is, therefore, possible that the BRUVs deployed in this study were not close enough to the pipeline to record site-attached species. Bond *et al.* (2018*c*) identified the EY pipeline on 43% of recordings from the BRUVs deployed during their study and, interestingly, four out of the five *G. buergeri* recorded at EY pipeline sites were on BRUVs that had the pipeline in the field of view. Furthermore, all *E. areolatus* recorded (five individuals) by Bond *et al.* (2018*c*) occurred on a single drop which landed next to the pipeline, facing into a pipeline span. A single *E. areolatus* was recorded using BRUVs in the current study. Furthermore, this BRUV was also the only deployment to record *L. sebae* (one individual) and *L. malabaricus* (three individuals); two species which were encountered more often in ROV transects (4 and 22 transects respectively). This deployment was the only BRUV that did not record *Nemipterus* spp., a species commonly associated with bare sand environments, off-pipeline (Bond *et al.* 2018*b*, 2018*c*). The composition of fish recorded on this deployment suggests it is closer to GWF1 than others. Alternatively, it may be in close proximity to a section of spanning pipeline, which provides increased structural complexity that can be attractive to fish (McLean *et al.* 2017; Bond *et al.* 2018*a*). We suggest that future field work utilising BRUVs to survey offshore infrastructure should consider using an ultra-short baseline (USBL) acoustic tracking system to provide an accurate, real-time position of the BRUV's on-bottom location and position relative to the pipeline. Finally, considering pipelines like GWF1 can move, we recommend multibeam surveys around the structure to provide an accurate and up-to-date position of the pipeline before sampling with BRUVs.

Practicality and expense of ROV and BRUV fish surveys

Industry routinely undertake visual inspections of pipeline infrastructure with work and survey-class ROVs. These operations cost more than A$100 000 per day and are not purposed to survey fish. Consequently, we could consider any information opportunistically gathered (i.e. records of fish) – free. Scientists and O&G operators are realising the scientific potential of historical video records collected during routine operations and using them to understand better the ecology around subsea infrastructure (Macreadie *et al.* 2018; McLean *et al.* 2018, 2020; Todd *et al.* 2020). By contrast, the 14 BRUV deployments used for this study were completed in one field day which cost less than A$10 000. The time taken to analyse video footage was approximately the same between methods. Collecting historical ROV video footage to survey fish may be free, but the design of any experiment utilising this video footage is bound by the limits of available data. A bespoke scientific survey using BRUVs has flexibility in experimental design. Indeed, scientists could employ ROV for targeted surveys (Schramm *et al.* 2020) and increase the flexibility in their experimental design, but surveys at depths and in remote locations such as those sampled here, would require expensive ROV systems beyond the finances of most scientists. We should iterate that the aim of this study was to compare surveys of fish along a subsea pipeline with ROV and BRUV, not to determine the most appropriate method to survey. As Sward *et al.* (2019) suggested, true abundance estimates obtained by ROV cannot be used to make reliable comparisons to relative abundance such as MaxN, but studies using these two methods may provide comparisons of assemblage structure and the efficiency of each method. Our study does just that. We recommend that scientists continue to utilise ROV video footage collected by industry to answer questions within the limits of the data and work with their survey team to increase the scientific value of their operations as outlined by McLean *et al.* (2020). Coupled with historical ROV video footage, BRUVs can be used for surveys of infrastructure and adjacent areas, which require a more complex experimental design financially viable for scientists.

Supplementary material

Supplementary material is available online.

References

Ajemian MJ, Wetz JJ, Shipley-Lozano B, Stunz GW (2015) Rapid assessment of fish communities on submerged oil and gas platform reefs using remotely operated vehicles. *Fisheries Research* **167**, 143–155. doi:10.1016/j.fishres.2015.02.011

Anderson MJ, Gorley RN, Clarke KR (2008) 'PERMANOVA for PRIMER: guide to software and statistical methods.' (PRIMER-E: Plymouth, UK)

Anderson MJ, Crist TO, Chase JM, Vellend M, Inouye BD, Freestone AL, Sanders NJ, Cornell HV, Comita LS, Davies KF, Harrison SP, Kraft NJB, Stegen JC, Swenson NG (2011) Navigating the multiple meanings of β diversity: a roadmap for the practicing ecologist. *Ecology Letters* **14**, 19–28. doi:10.1111/j.1461-0248.2010.01552.x

Downloaded from http://connectsci.au/mf/article-pdf/73/7/915/3951 21/mf21261.pdf by guest on 06 March 2026

Andradi-Brown DA, Macaya-Solis C, Exton DA, Gress E, Wright G, Rogers AD (2016) Assessing caribbean shallow and mesophotic reef fish communities using baited-remote underwater video (BRUV) and diver-operated video (DOV) survey techniques. *PLoS ONE* **11**, e0168235. doi:10.1371/journal.pone.0168235

Bailey DM, Priede IG (2002) Predicting fish behaviour in response to abyssal food falls. *Marine Biology* **141**, 831–840. doi:10.1007/s00227-002-0891-9

Baker KD, Haedrich RL, Snelgrove PVR, Wareham VE, Edinger EN, Gilkinson KD (2012) Small-scale patterns of deep-sea fish distributions and assemblages of the Grand Banks, Newfoundland continental slope. *Deep-Sea Research – I. Oceanographic Research Papers* **65**, 171–188. doi:10.1016/j.dsr.2012.03.012

Bernard ATF, Götz A (2012) Bait increases the precision in count data from remote underwater video for most subtidal reef fish in the warm-temperate Agulhas bioregion. *Marine Ecology Progress Series* **471**, 235–252. doi:10.3354/meps10039

Boettiger C, Lang DT, Wainwright PC (2012) Rfishbase: exploring, manipulating and visualizing FishBase data from R. *Journal of Fish Biology* **81**, 2030–2039. doi:10.1111/j.1095-8649.2012.03464.x

Bond T (2020) The effect of pipelines on fish and fisheries and the implications for decommissioning. PhD thesis, The University of Western Australia, Perth, WA, Australia. doi:10.26182/56N4-9030

Bond T, Langlois TJ, Partridge JC, Birt MJ, Malseed BE, Smith L, McLean DL (2018*a*) Diel shifts and habitat associations of fish assemblages on a subsea pipeline. *Fisheries Research* **206**, 220–234. doi:10.1016/j.fishres.2018.05.011

Bond T, Partridge JC, Taylor MD, Cooper TF, McLean DL (2018*b*) The influence of depth and a subsea pipeline on fish assemblages and commercially fished species. *PLoS ONE* **13**, e0207703. doi:10.1371/journal.pone.0207703

Bond T, Partridge JC, Taylor MD, Langlois TJ, Malseed BE, Smith LD, McLean DL (2018*c*) Fish associated with a subsea pipeline and adjacent seafloor of the North West Shelf of Western Australia. *Marine Environmental Research* **141**, 53–65. doi:10.1016/j.marenvres.2018.08.003

Bond T, Prince J, Partridge JC, White D, Mclean DL (2018*d*) The value of subsea pipelines to marine biodiversity. In 'Offshore Technology Conference Asia', 20–23 March 2018, Kuala Lumpur, Malaysia. pp. 1–9. (OnePetro) doi:10.4043/28240-MS

Bridge TCL, Luiz OJ, Coleman RR, Kane CN, Kosaki RK (2016) Ecological and morphological traits predict depth-generalist fishes on coral reefs. *Proceedings of the Royal Society of London – B. Biological Sciences* **283**, 20152332. doi:10.1098/rspb.2015.2332

Cappo M, Harvey E, Malcolm H, Speare P (2003) Potential of video techniques to monitor diversity, abundance and size of fish in studies of marine protected areas. In 'Aquatic protected areas – what works best and how do we know?' (Eds JP Beumer, A Grant, DC Smith) pp. 455–464. (University of Queensland: Cairns, Qld, Australia)

Cappo M, Speare P, De'ath G (2004) Comparison of baited remote underwater video stations (BRUVS) and prawn (shrimp) trawls for assessments of fish biodiversity in inter-reefal areas of the Great Barrier Reef Marine Park. *Journal of Experimental Marine Biology and Ecology* **302**, 123–152. doi:10.1016/j.jembe.2003.10.006

Chambers JM, Cleveland WS, Kleiner B, Tukey PA (2018) 'Graphical methods for data analysis, graphical methods for data analysis.' (CRC Press LLC: Milton, UK) doi:doi:10.1201/9781351072304

Clarke RT, Gorley RN (2006) 'PRIMER v6: User Manual/Tutorial.' (PRIMER-E: Plymouth, UK)

Collins MA, Priede IG, Bagley PM (1999) In situ comparison of activity in two deep-sea scavenging fishes occupying different depth zones. *Proceedings of the Royal Society of London – B. Biological Sciences* **266**, 2011–2016. doi:10.1098/rspb.1999.0879

Colton MA, Swearer SE (2009) A comparison of two survey methods: differences between underwater visual census and baited remote underwater video. *Marine Ecology Progress Series* **400**, 19–36. doi:10.3354/meps08377

Department of Industry, Innovation and Science (2018) 'Offshore petroleum decommissioning guideline.' (Department of Industry, Innovation and Science)

Dorman SR, Harvey ES, Newman SJ (2012) Bait effects in sampling coral reef fish assemblages with stereo-BRUVs. *PLoS ONE* **7**, e41538. doi:10.1371/journal.pone.0041538

Fisher R, Hogan JD (2007) Morphological predictors of swimming speed: a case study of pre-settlement juvenile coral reef fishes. *Journal of Experimental Biology* **210**, 2436–2443. doi:10.1242/jeb.004275

Fitzpatrick C, McLean DL, Harvey ES (2013) Using artificial illumination to survey nocturnal reef fish. *Fisheries Research* **146**, 41–50. doi:10.1016/j.fishres.2013.03.016

Gaughan DJ, Molony B, Santoro K (2019) Status reports of the fisheries and aquatic resources of Western Australia 2017/18: the State of the Fisheries. (WA Department of Primary Industries and Regional Development: Perth, WA, Australia) Available at http://www.fish.wa.gov.au/Documents/sofar/status_reports_of_the_fisheries_and_aquatic_resources_2017–18.pdf

Goetze JS, Jupiter SD, Langlois TJ, Wilson SK, Harvey ES, Bond T, Naisilisili W (2015) Diver operated video most accurately detects the impacts of fishing within periodically harvested closures. *Journal of Experimental Marine Biology and Ecology* **462**, 74–82. doi:10.1016/j.jembe.2014.10.004

Hardinge J, Harvey ES, Saunders BJ, Newman SJ (2013) A little bait goes a long way: the influence of bait quantity on a temperate fish assemblage sampled using stereo-BRUVs. *Journal of Experimental Marine Biology and Ecology* **449**, 250–260. doi:10.1016/j.jembe.2013.09.018

Harvey ES, Shortis MR (1995) A system for stereo-video measurement of sub-tidal organisms. *Marine Technology Society Journal* **29**, 10–22.

Harvey ES, Shortis MR (1998) Calibration stability of an underwater stereo-video system: implications for measurement accuracy and precision. *Marine Technology Society Journal* **32**, 3–17.

Harvey ES, Cappo M, Butler JJ, Hall N, Kendrick GA (2007) Bait attraction affects the performance of remote underwater video stations in assessment of demersal fish community structure. *Marine Ecology Progress Series* **350**, 245–254. doi:10.3354/meps07192

Harvey ES, Butler JJ, McLean DL, Shand J (2012*a*) Contrasting habitat use of diurnal and nocturnal fish assemblages in temperate Western Australia. *Journal of Experimental Marine Biology and Ecology* **426–427**, 78–86. doi:10.1016/j.jembe.2012.05.019

Harvey ES, Newman SJ, McLean DL, Cappo M, Meeuwig JJ, Skepper CL (2012*b*) Comparison of the relative efficiencies of stereo-BRUVs and traps for sampling tropical continental shelf demersal fishes. *Fisheries Research* **125–126**, 108–120. doi:10.1016/j.fishres.2012.01.026

Langlois TJ, Harvey ES, Fitzpatrick B, Meeuwig JJ, Shedrawi G, Watson DL (2010) Cost-efficient sampling of fish assemblages: comparison of baited video stations and diver video transects. *Aquatic Biology* **9**, 155–168. doi:10.3354/ab00235

Leckie SHF, Draper S, White DJ, Cheng L, Fogliani A (2015) Lifelong embedment and spanning of a pipeline on a mobile seabed. *Coastal Engineering* **95**, 130–146. doi:10.1016/j.coastaleng.2014.10.003

Linley TD, Alt CHS, Jones DOB, Priede IG (2013) Bathyal demersal fishes of the Charlie-Gibbs Fracture Zone region (49–54°N) of the Mid-Atlantic Ridge: III. Results from remotely operated vehicle (ROV) video transects. *Deep-sea Research – II. Topical Studies in Oceanography* **98**, 407–411. doi:10.1016/j.dsr2.2013.08.013

Logan JM, Young MA, Harvey ES, Schimel ACG, Ierodiaconou D (2017) Combining underwater video methods improves effectiveness of demersal fish assemblage surveys across habitats. *Marine Ecology Progress Series* **582**, 181–200. doi:10.3354/meps12326

Lowry MB, Folpp H, Gregson M, Mckenzie R (2011) A comparison of methods for estimating fish assemblages associated with estuarine artificial reefs. *Brazilian Journal of Oceanography* **59**, 119–131. doi:10.1590/S1679-87592011000500014

Macreadie PI, McLean DL, Thomson PG, Partridge JC, Jones DOB, Gates AR, Benfield MC, Collin SP, Booth DJ, Smith LL, Techera E, Skropeta D, Horton T, Pattiaratchi C, Bond T, Fowler AM (2018) Eyes in the sea: unlocking the mysteries of the ocean using industrial, remotely operated vehicles (ROVs) *Science of the Total Environment* **634**, 1077–1091. doi:10.1016/j.scitotenv.2018.04.049

McLean DL, Green M, Harvey ES, Williams A, Daley R, Graham KJ (2015) Comparison of baited longlines and baited underwater cameras for assessing the composition of continental slope deepwater fish assemblages off southeast Australia. *Deep-sea Research – I. Oceanographic Research Papers* **98**, 10–20. doi:10.1016/j.dsr.2014.11.013

Downloaded from http://connectsci.au/mf/article-pdf/73/7/915/395121/mf21261.pdf by guest on 06 March 2026

McLean DL, Langlois TJ, Newman SJ, Holmes TH, Birt MJ, Bornt KR, Bond T, Collins DL, Evans SN, Travers MJ, Wakefield CB, Babcock RC, Fisher R (2016) Distribution, abundance, diversity and habitat associations of fishes across a bioregion experiencing rapid coastal development. *Estuarine, Coastal and Shelf Science* **178**, 36–47. doi:10.1016/j.ecss.2016.05.026

McLean DL, Partridge JC, Bond T, Birt MJ, Bornt KR, Langlois TJ (2017) Using industry ROV videos to assess fish associations with subsea pipelines. *Continental Shelf Research* **141**, 76–97. doi:10.1016/j.csr.2017.05.006

McLean DL, Macreadie P, White DJ, Thomson PG, Fowler A, Gates AR, Benfield M, Horton T, Skropeta D, Bond T, Booth DJ, Techera E, Pattiaratchi C, Collin SP, Jones DOB, Smith L, Partridge J (2018) Understanding the global scientific value of industry ROV data, to quantify marine ecology and guide offshore decommissioning strategies. In 'Offshore Technology Conference Asia', 20–23 March 2018, Kuala Lumpur, Malaysia. pp. 20–23. (OnePetro) doi:10.4043/28312-MS

McLean DL, Parsons MJG, Gates AR, Benfield MC, Bond T, Booth DJ, Bunce M, Fowler AM, Harvey ES, Macreadie PI, Pattiaratchi CB, Rouse S, Partridge JC, Thomson PG, Todd VLG, Jones DOB (2020) Enhancing the scientific value of industry remotely operated vehicles (ROVs) in our oceans. *Frontiers in Marine Science* **7**, 220. doi:10.3389/fmars.2020.00220

Myers EMV, Harvey ES, Saunders BJ, Travers MJ (2016) Fine-scale patterns in the day, night and crepuscular composition of a temperate reef fish assemblage. *Marine Ecology* **37**, 668–678. doi:10.1111/maec.12336

Newman SJ, Smith KA, Stephenson CL (2008) ESD Report Series number 6 – Northern Demersal Scalefish Managed Fishery. (WA Department of Primary Industries and Regional Development: Perth, WA, Australia) Available at http://www.fish.wa.gov.au/Documents/esd_reports/esd006.pdf

Palomares ML, Pauly D (1989) A multiple regression model for predicting the food consumption of marine fish populations. *Marine and Freshwater Research* **40**, 259–273. doi:10.1071/MF9890259

Patterson WF, Dance MA, Addis DT (2008) Development of a remotely operated vehicle-based methodology to estimate fish community structure at artificial reef sites in the Northern Gulf of Mexico. In 'Proceedings of the 61st Gulf and Caribbean Fisheries Institute', 10–14 November 2008, Gosier, Guadeloupe, French West Indies. pp. 263–270. (Gulf and Caribbean Fisheries Institute) Available at http://hdl.handle.net/1834/31544

Pauly D (1989) Food consumption by tropical and temperate fish populations: some generalizations. *Journal of Fish Biology* **35**, 11–20. doi:10.1111/j.1095-8649.1989.tb03041.x

Popper AN (2007) Effects of anthropogenic sounds on fishes. *Fisheries* **28**, 24–31. doi:10.1577/1548-8446(2003)28[24:EOASOF]2.0.CO;2

Priede IG, Bagley PM, Smith A, Creasey S, Merrett NR (1994) Scavenging deep demersal fishes of the Porcupine Seabight, north-east Atlantic: observations by baited camera, trap and trawl. *Journal of the Marine Biological Association of the United Kingdom* **74**, 481–498. doi:10.1017/S0025315400047615

Ryer CH, Stoner AW, Iseri PJ, Spencer ML (2009) Effects of simulated underwater vehicle lighting on fish behavior. *Marine Ecology Progress Series* **391**, 97–106. doi:10.3354/meps08168

Sainsbury KJ, Campbell RA, Lindholm R, Whitelaw AW (1997) Experimental management of an Australian multi-species fishery: examining the possibility of trawl-induced habitat modification. In 'Global trends: fisheries management: proceedings of the symposium', 14–16 June 1994, Seattle, WA, USA. American Fisheries Society Symposium, vol. 20, pp. 107–112. (American Fisheries Society: Bethesda, MD, USA)

Sambilay VC (1990) Interrelationships between swimming speed, caudal fin aspect ratio and body length of fishes. *Fishbyte* **8**(3), 16–20.

Santana-Garcon J, Braccini M, Langlois TJ, Newman SJ, Mcauley RB, Harvey ES (2014) Calibration of pelagic stereo-BRUVs and scientific longline surveys for sampling sharks. *Methods in Ecology and Evolution* **5**, 824–833. doi:10.1111/2041-210X.12216

Schramm KD, Harvey ES, Goetze JS, Travers MJ, Warnock B, Saunders BJ (2020) A comparison of stereo-BRUV, diver operated and remote stereo-video transects for assessing reef fish assemblages. *Journal of Experimental Marine Biology and Ecology* **524**, 151273. doi:10.1016/j.jembe.2019.151273

Sfakiotakis M, Lane DM, Davies JBC (1999) Review of fish swimming modes for aquatic locomotion. *IEEE Journal of Oceanic Engineering* **24**, 237–252. doi:10.1109/48.757275

Sharp GD, Dizon AE (1979) The physiological ecology of tunas. *Copeia* **1979**, 557. doi:10.2307/1443248

Stoner AW (2004) Effects of environmental variables on fish feeding ecology: implications for the performance of baited fishing gear and stock assessment. *Journal of Fish Biology* **65**, 1445–1471. doi:10.1111/j.0022-1112.2004.00593.x

Stoner AW, Ryer CH, Parker SJ, Auster PJ, Wakefield WW (2008) Evaluating the role of fish behavior in surveys conducted with underwater vehicles. *Canadian Journal of Fisheries and Aquatic Sciences* **65**, 1230–1243. doi:10.1139/F08-032

Sward D, Monk J, Barrett N (2019) A systematic review of remotely operated vehicle surveys for visually assessing fish assemblages. *Frontiers in Marine Science* **6**, 134. doi:10.3389/fmars.2019.00134

Thomson PG, Fowler AM, Davis AR, Pattiaratchi CB, Booth DJ (2018) Some old movies become classics – a case study determining the scientific value of ROV inspection footage on a platform on Australia's North West Shelf. *Frontiers in Marine Science* **5**, 471. doi:10.3389/fmars.2018.00471

Todd VLG, Williamson LD, Cox SE, Todd IB, Macreadie PI (2019) Characterizing the first wave of fish and invertebrate colonization on a new offshore petroleum platform. *ICES Journal of Marine Science* **77**, 1127–1136. doi:10.1093/icesjms/fsz077

Todd VLG, Lazar L, Williamson LD, Peters IT, Hoover AL, Cox SE, Todd IB, Macreadie PI, McLean DL (2020) Underwater visual records of marine megafauna around offshore anthropogenic structures. *Frontiers in Marine Science* **7**, 230. doi:10.3389/fmars.2020.00230

Trenkel VM, Lorance P, Mahévas S (2004) Do visual transects provide true population density estimates for deepwater fish? *ICES Journal of Marine Science* **61**, 1050–1056. doi:10.1016/j.icesjms.2004.06.002

Watson DL, Harvey ES, Anderson MJ, Kendrick GA (2005) A comparison of temperate reef fish assemblages recorded by three underwater stereo-video techniques. *Marine Biology* **148**, 415–425. doi:10.1007/s00227-005-0090-6

Watson DL, Harvey ES, Fitzpatrick BM, Langlois TJ, Shedrawi G (2010) Assessing reef fish assemblage structure: how do different stereo-video techniques compare? *Marine Biology* **157**, 1237–1250. doi:10.1007/s00227-010-1404-x

Webb PW (1984) Body form, locomotion and foraging in aquatic vertebrates. *American Zoologist* **24**, 107–120. doi:10.1093/icb/24.1.107

Westneat MW, Wainwright SA (2001) 7. Mechanical design for swimming: muscle, tendon, and bone. *Fish Physiology* **19**, 271–311. doi:10.1016/S1546-5098(01)19008-4

Yamaguchi T, Ishikawa T, Imai Y (2018) 'Integrated nano-biomechanics.' (Elsevier)

Downloaded from http://connectsci.au/mf/article-pdf/73/7/915/3951 21/mf21261.pdf by guest on 06 March 2026

Data availability. The data that support this study cannot be publicly shared due to ethical or privacy reasons and may be shared upon reasonable request to the corresponding author if appropriate.

Conflicts of interest. The authors declare that they have no conflicts of interest.

Declaration of funding. Woodside Energy Ltd (as the operator of the North West Shelf Project pipelines studied) provided project funding. The Australian Government, Woodside Energy Ltd, and The University of Western Australia, through Research Training Program (RTP) Scholarship, Woodside Top-Top and UWA Safety-Net Top-Up Scholarships, provided stipend for T. Bond to undertake this research as part of a PhD.

Acknowledgements. We acknowledge Woodside Energy Ltd (as the operator of the North West Shelf Project pipelines studied) for project funding, development and support. We also thank Andy Edwards, Sam Crock and Mia McIntyre from Keshi Mer Expeditions for their assistance in the field, particularly their ability to regularly pinpoint a small pipeline in deep water. This paper forms part of the PhD thesis of T. Bond (2020).

Author affiliations

[A]The UWA Oceans Institute, The University of Western Australia, 35 Stirling Highway, Perth, WA 6009, Australia.

[B]School of Biological Sciences, The University of Western Australia, 35 Stirling Highway, Perth, WA 6009, Australia.

[C]Australian Institute of Marine Science, Indian Ocean Marine Research Centre, corner of Fairway and Service Road 4, Perth, WA 6009, Australia.

Downloaded from http://connectsci.au/mf/article-pdf/73/7/915/395121/mf21261.pdf by guest on 06 March 2026