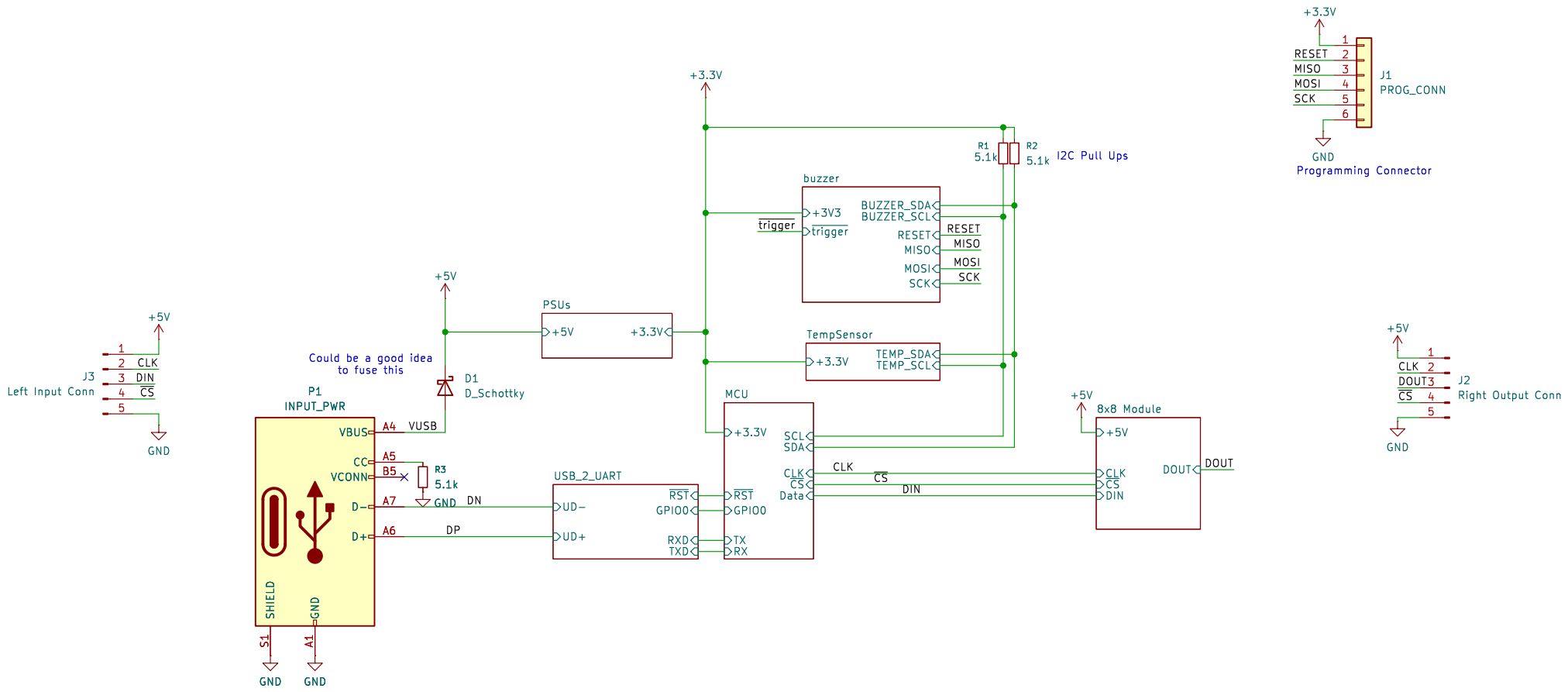


Sheet: /
File: RocketClock.kicad_sch

**Title:**

| Size: A4 | Date: | Rev: |
|---|---|---|
| KiCad E.D.A. 9.0.6 | | Id: 1/7 |

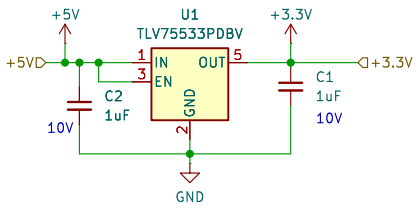


Sheet: /PSUs/
File: PSUs.kicad_sch

**Title:**

| Size: A4 | Date: | Rev: |
|---|---|---|
| KiCad E.D.A. 9.0.6 | | Id: 2/7 |

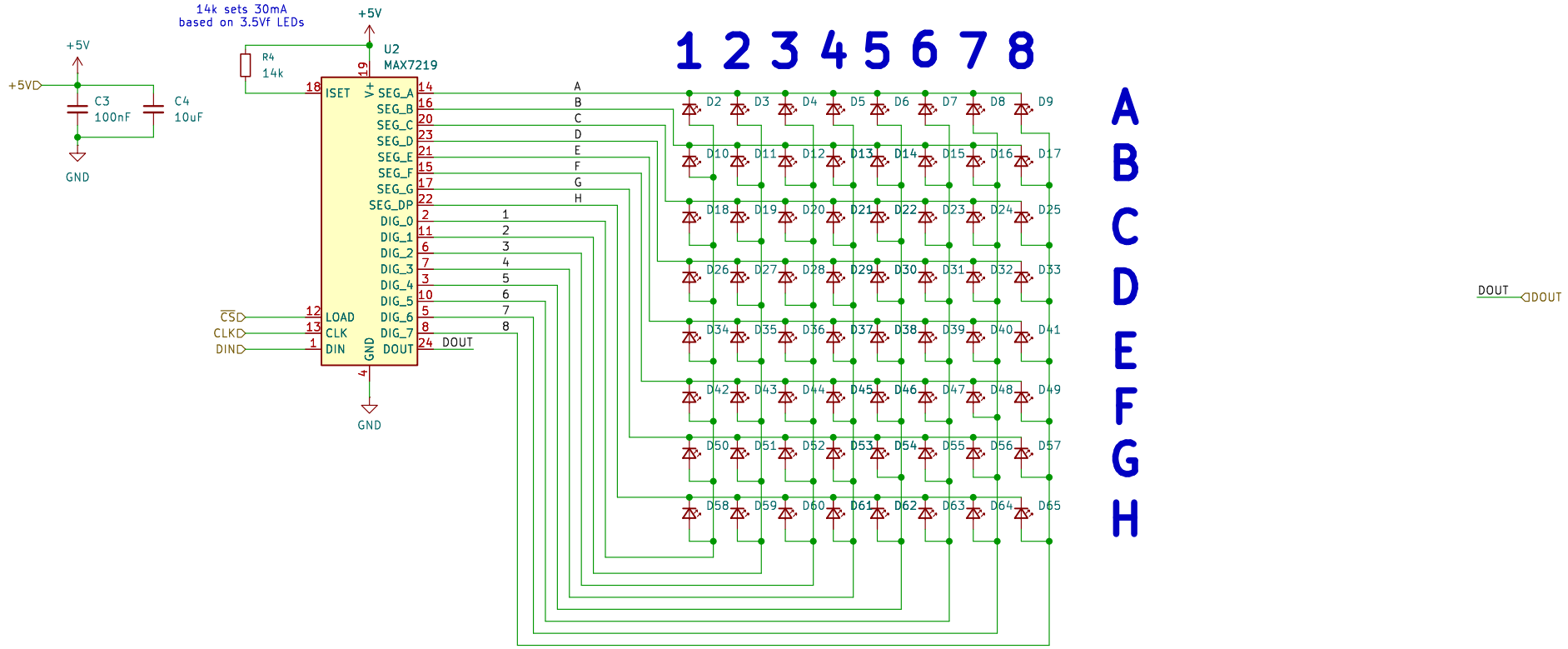


Sheet: /8x8 Module/
File: 8x8_module.kicad_sch

**Title:**

| Size: A4 | Date: | Rev: |
|---|---|---|
| KiCad E.D.A. 9.0.6 | | Id: 3/7 |

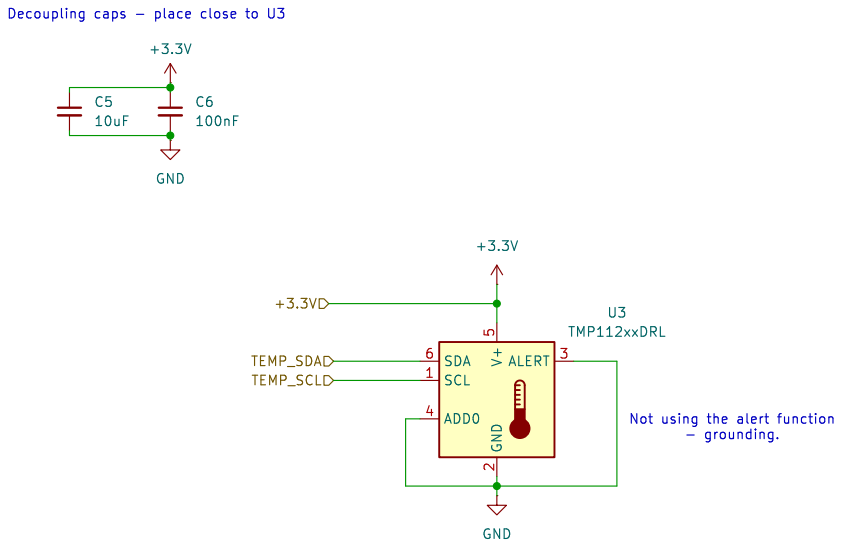


Sheet: /TempSensor/
File: tempSensor.kicad_sch

**Title:**

| Size: A4 | Date: | Rev: |
|---|---|---|
| KiCad E.D.A. 9.0.6 | | Id: 5/7 |

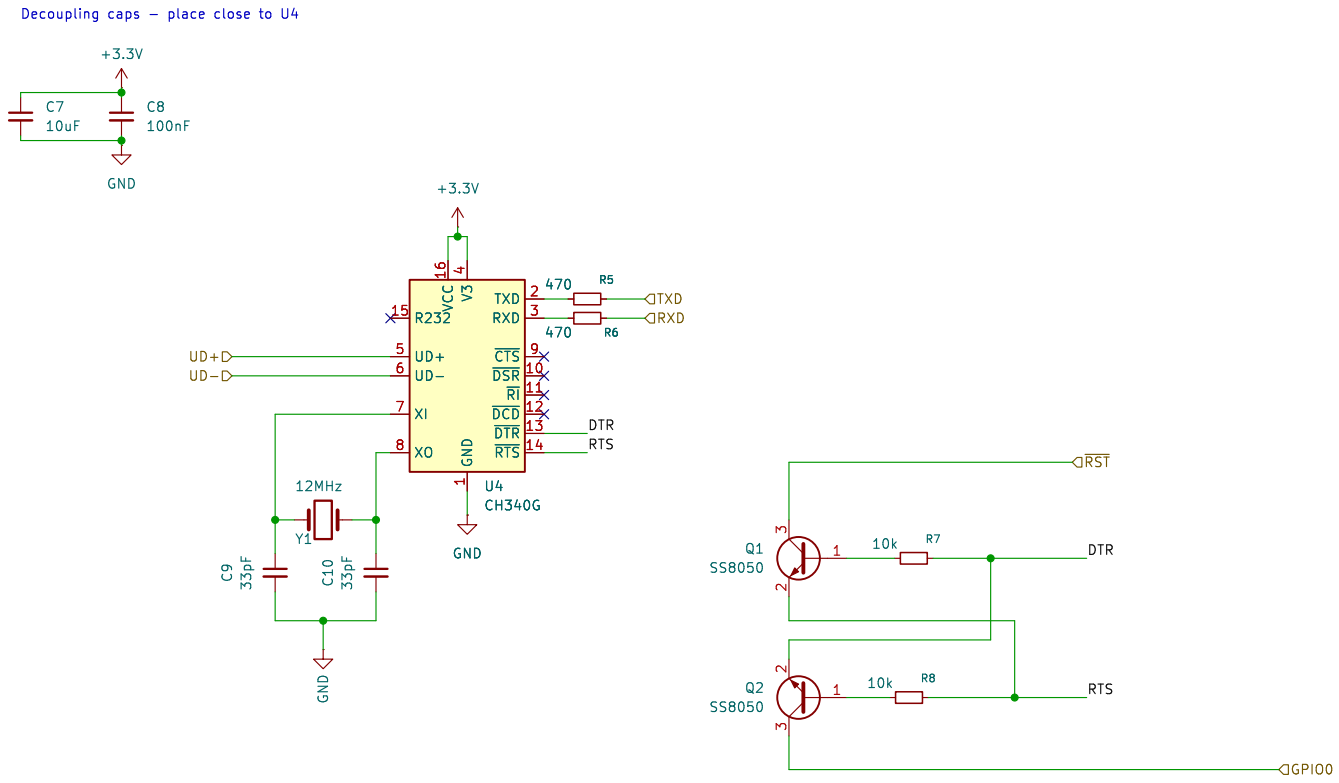


Sheet: /USB_2_UART/
File: usb_2_uart.kicad_sch

**Title:**

| Size: A4 | Date: | **Rev:** |
|---|---|---|
| KiCad E.D.A. 9.0.6 | | Id: 6/7 |

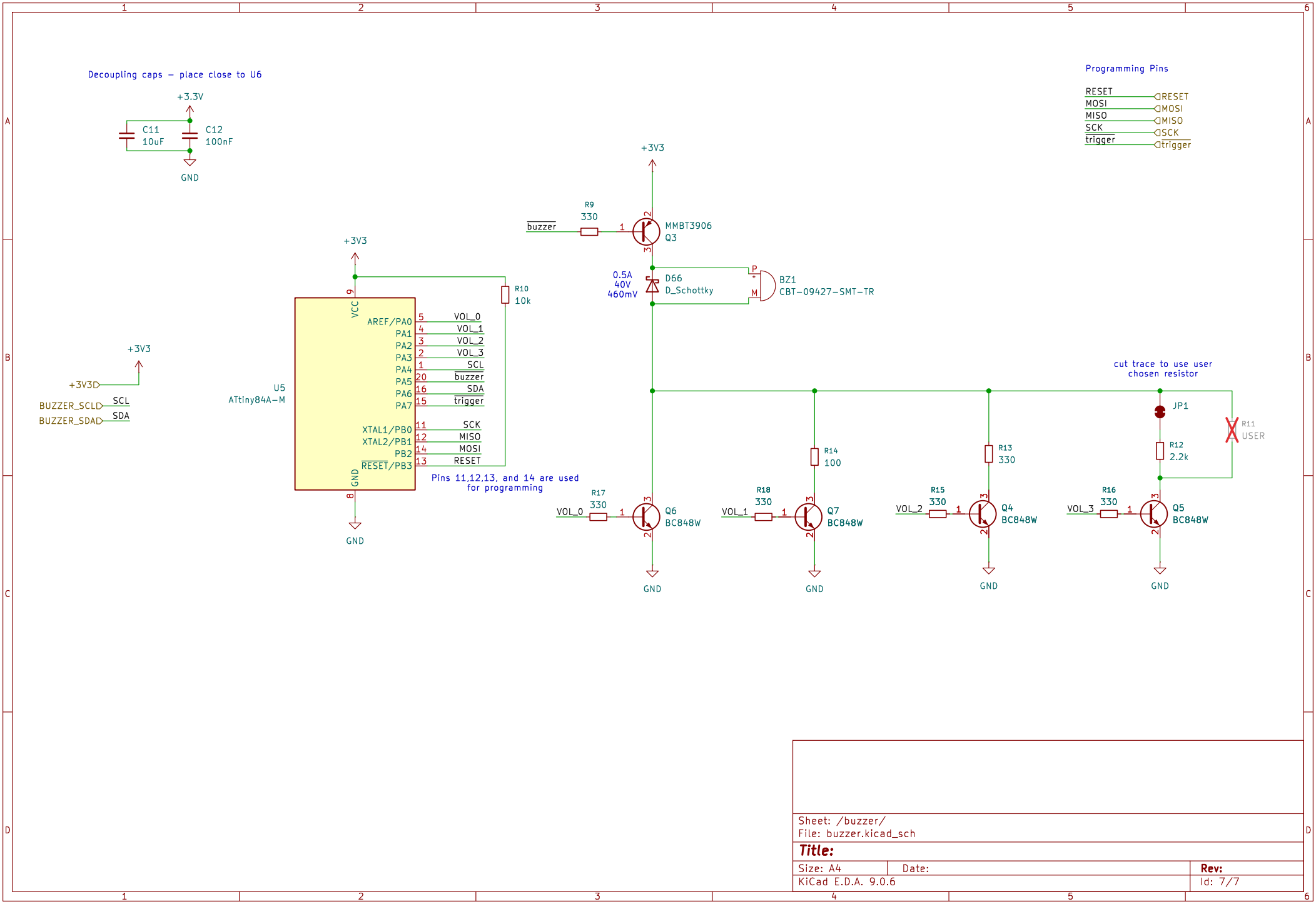


Sheet: /buzzer/
File: buzzer.kicad_sch

**Title:**

| Size: A4 | Date: | Rev: |
|---|---|---|
| KiCad E.D.A. 9.0.6 | | Id: 7/7 |

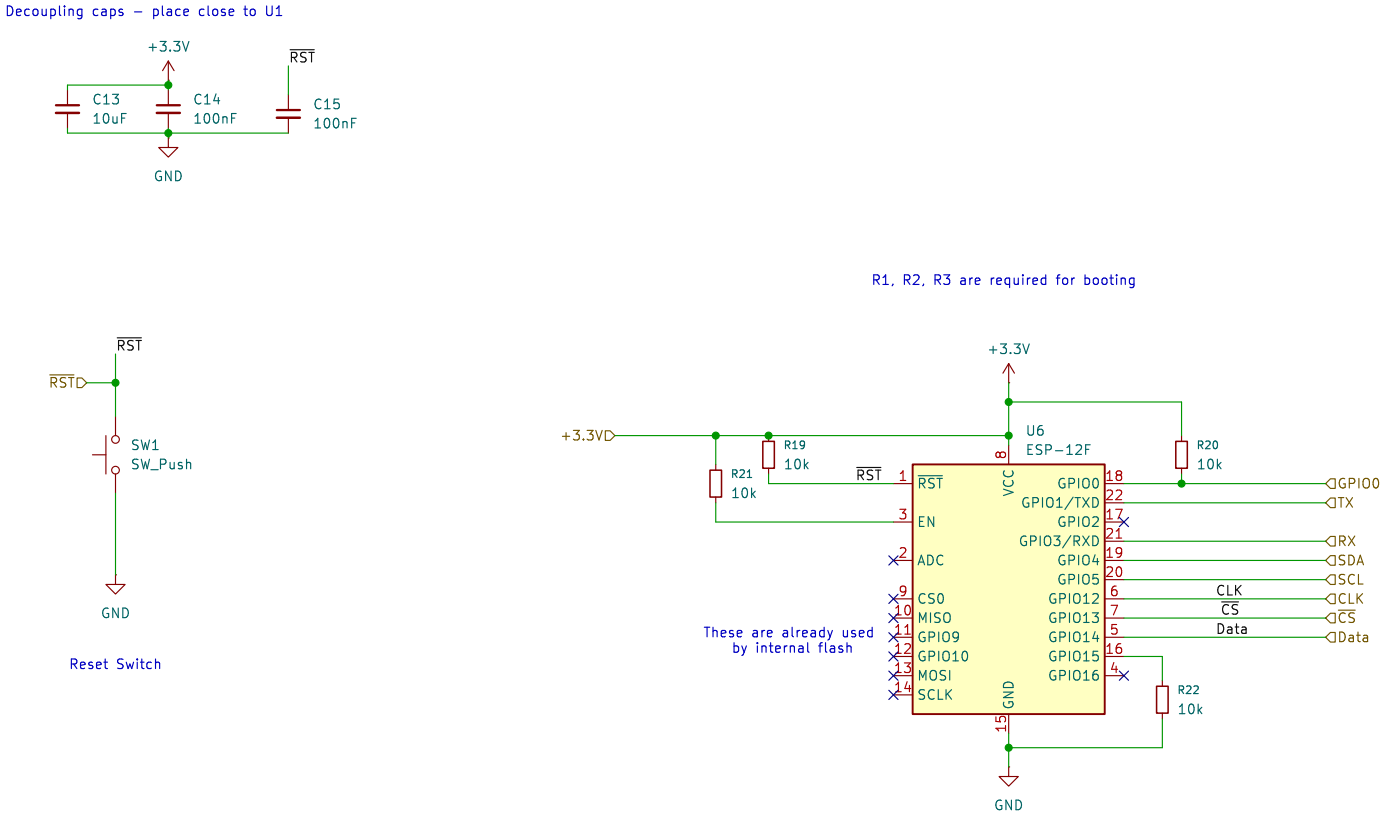


Sheet: /MCU/
File: mcu.kicad_sch

**Title:**

| Size: A4 | Date: | Rev: |
|---|---|---|
| KiCad E.D.A. 9.0.6 | | Id: 19/7 |