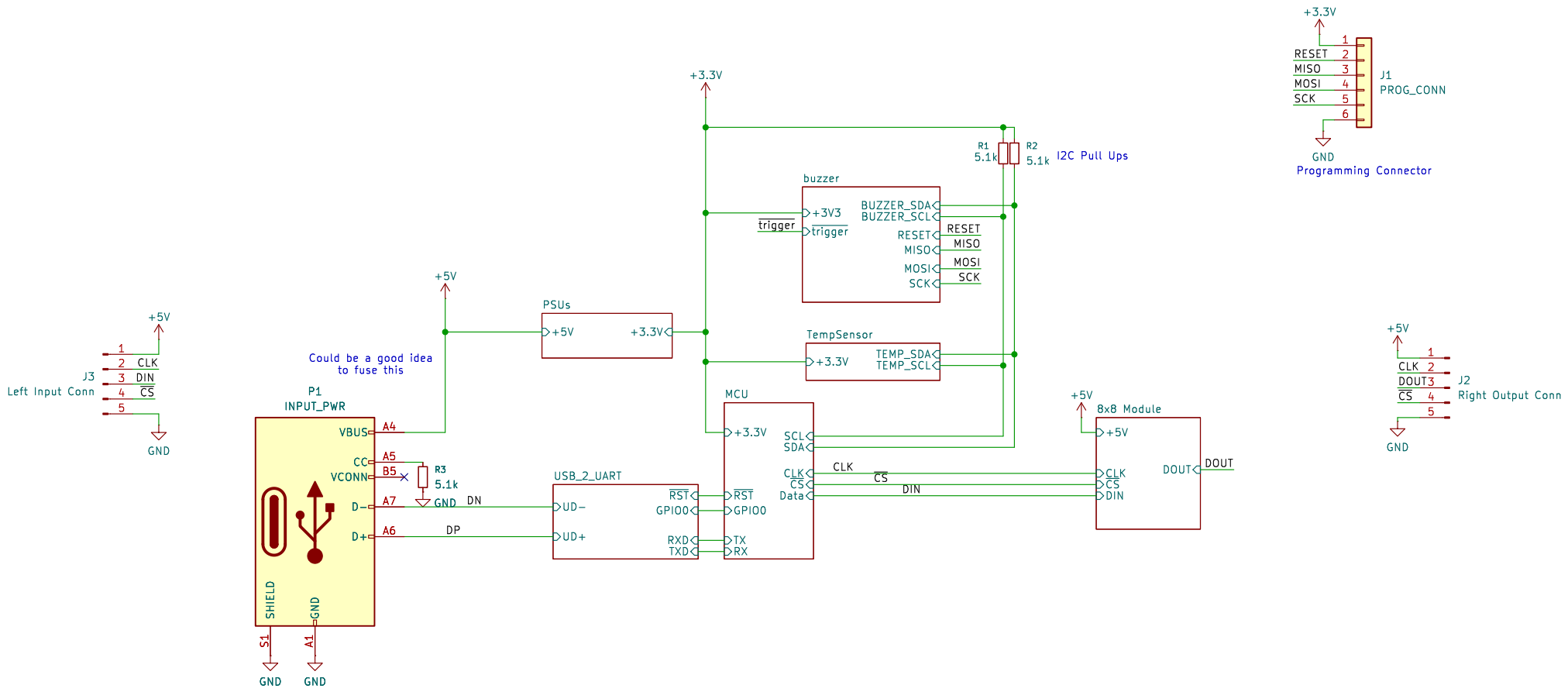

Sheet: /
File: RocketClock.kicad_sch

Title:

Size: A4	Date:	Rev:
KiCad E.D.A. 9.0.6		Id: 1/7

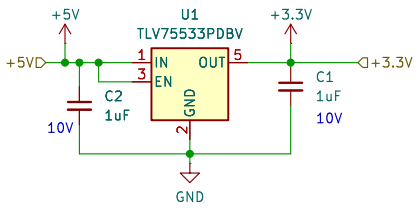

Sheet: /PSUs/
File: PSUs.kicad_sch

Title:

Size: A4	Date:	Rev:
KiCad E.D.A. 9.0.6		Id: 2/7

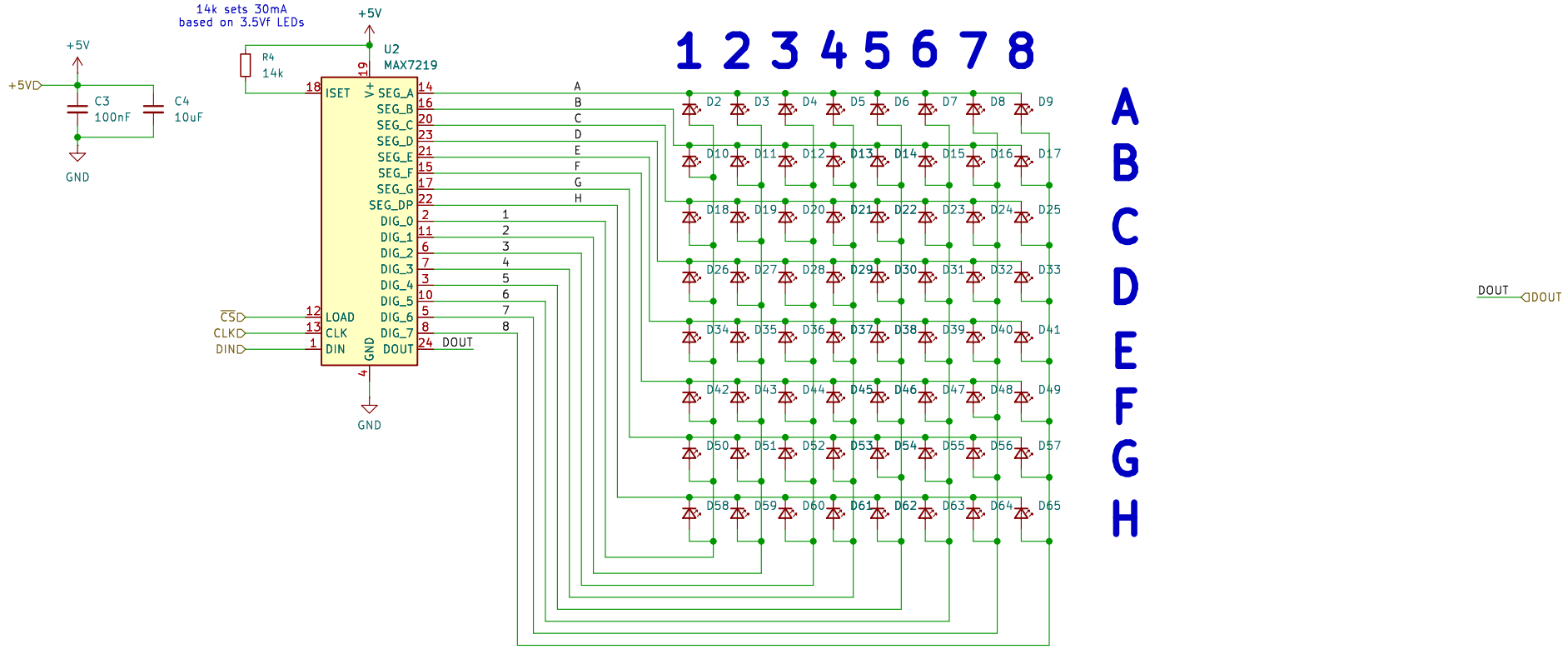

Sheet: /8x8 Module/
File: 8x8_module.kicad_sch

Title:

Size: A4	Date:	Rev:
KiCad E.D.A. 9.0.6		Id: 3/7

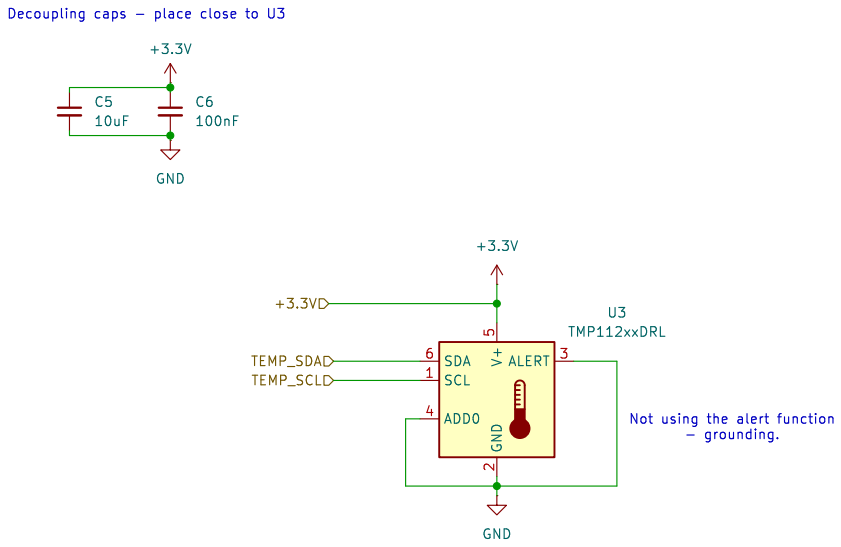

Sheet: /TempSensor/
File: tempSensor.kicad_sch

Title:

Size: A4	Date:	Rev:
KiCad E.D.A. 9.0.6		Id: 5/7

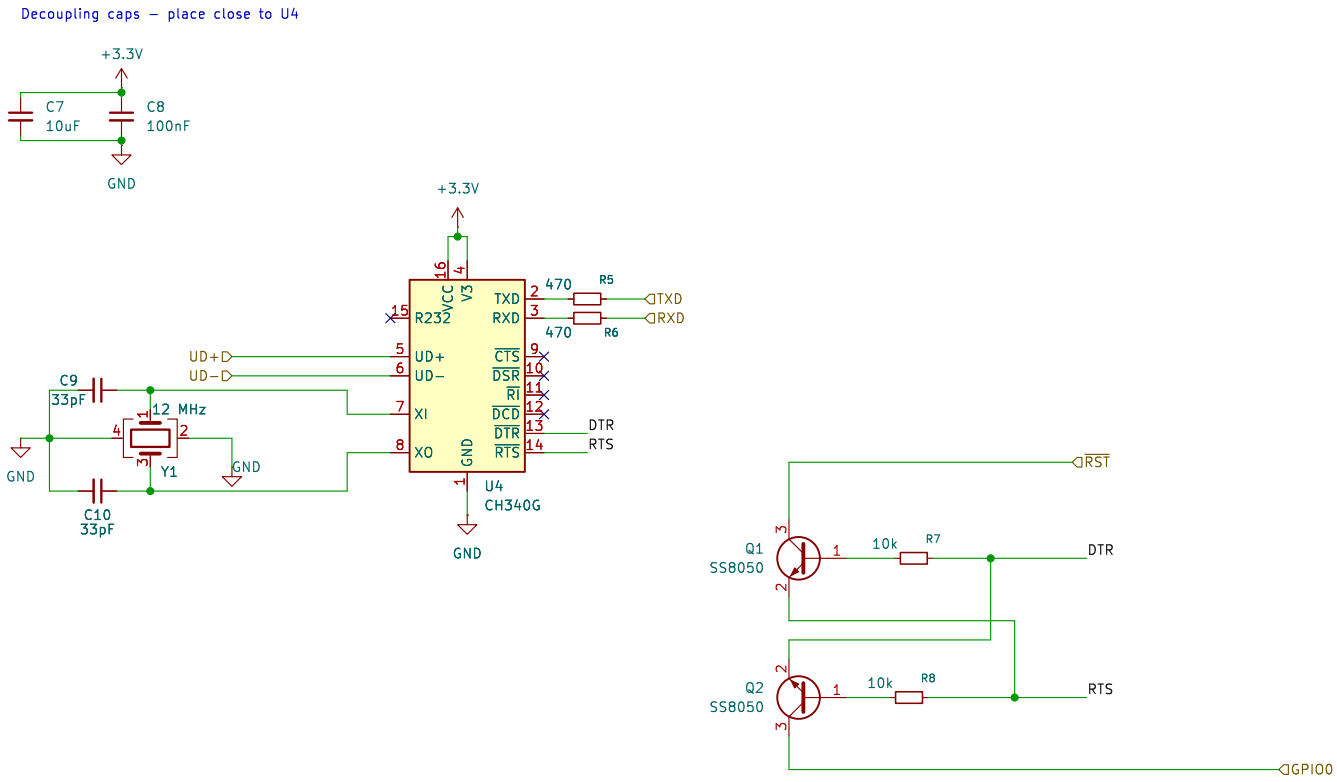

Sheet: /USB_2_UART/
File: usb_2_uart.kicad_sch

Title:

Size: A4	Date:	Rev:
KiCad E.D.A. 9.0.6		Id: 6/7

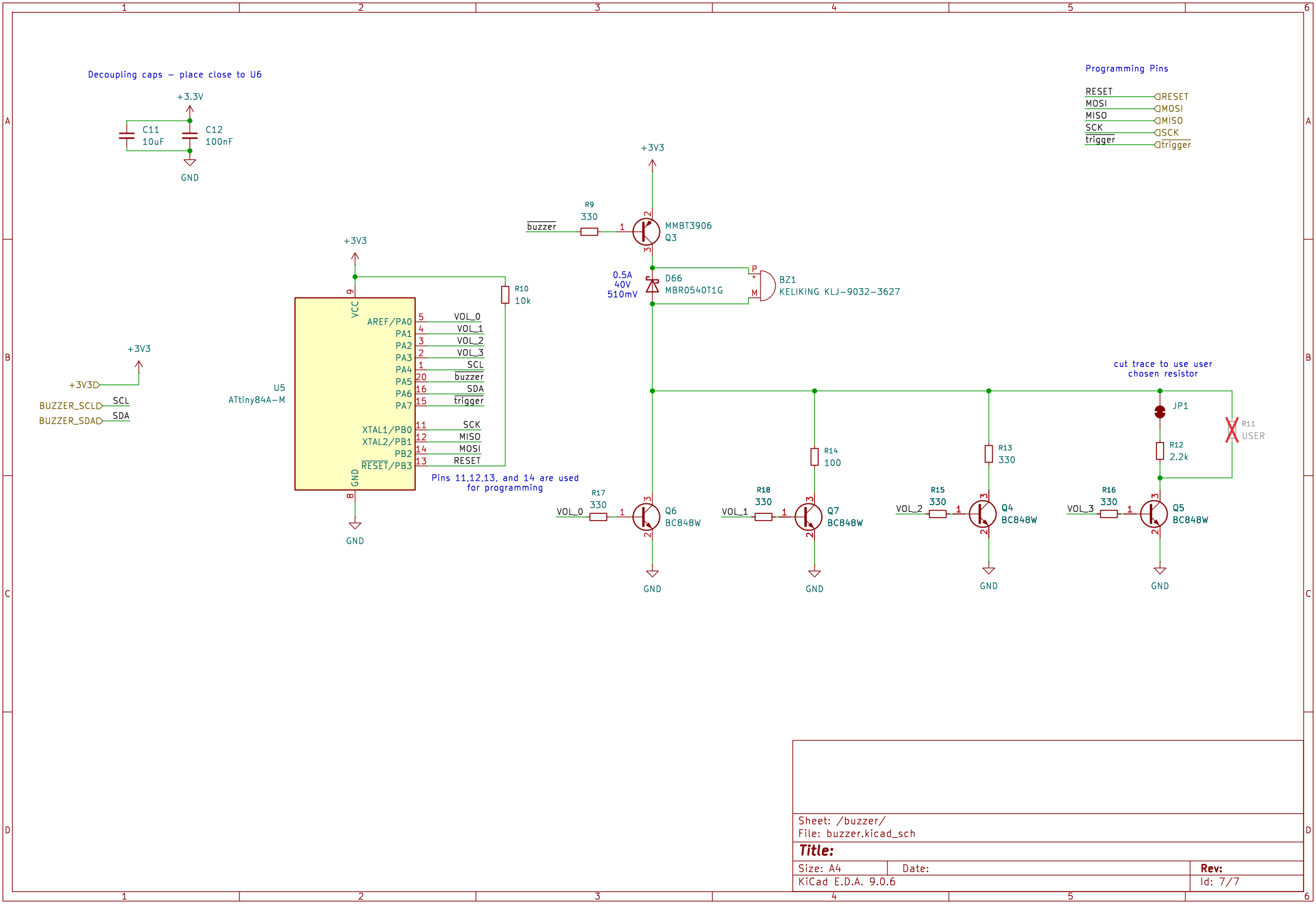

Sheet: /buzzer/
File: buzzer.kicad_sch

Title:

Size: A4	Date:	Rev:
KiCad E.D.A. 9.0.6		Id: 7/7

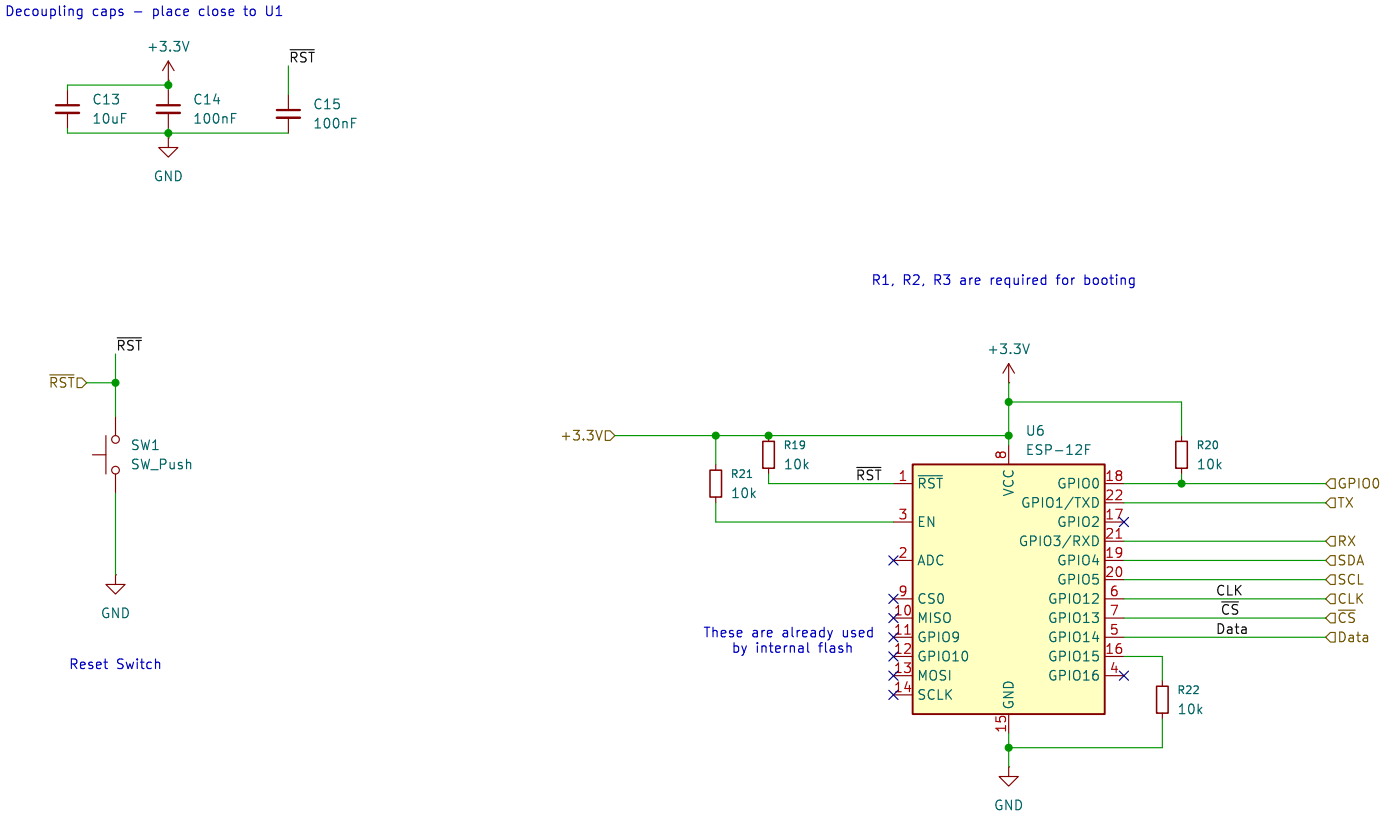

Sheet: /MCU/
File: mcu.kicad_sch

Title:

Size: A4	Date:	Rev:
KiCad E.D.A. 9.0.6		Id: 19/7