I–V and Voltage Transfer Characteristics of MOSFET

Lab 4 — ECEN 222: Electronic Circuits II-CE

University of Nebraska–Lincoln
Department of Electrical and Computer Engineering

1 Objectives

The primary objective of this lab is to investigate the fundamental current-voltage (I-V) characteristics and voltage transfer characteristics of metal-oxide-semiconductor field-effect transistors (MOSFETs). Upon completion of this lab, students will understand the relationship between gate-source voltage, drain current, and drain-source voltage in MOSFET operation, measure and characterize the device transconductance parameter (k_n) and threshold voltage (V_{th}), map the complete output characteristics showing all regions of MOSFET operation (cutoff, triode, and saturation), characterize the transfer characteristics relating gate voltage to drain current, and analyze the voltage transfer characteristic of a simple common-source configuration. Through hands-on measurements and analysis, students will develop a thorough understanding of the fundamental I-V relationships that govern MOSFET behavior, which will serve as the foundation for subsequent labs on biasing, amplifiers, and frequency response.

2 Pre-Lab Preparation

Before arriving at the lab session, students are required to thoroughly prepare by reading the relevant material from the course textbook. Specifically, read Chapter 4 (MOS Field-Effect Transistors) in Sedra & Smith, paying special attention to sections covering MOSFET device structure and physical operation, terminal characteristics in saturation mode, operation in triode and cutoff modes, and the current-voltage characteristics. Focus on understanding the square-law relationship between gate-source voltage and drain current, the concept of threshold voltage, and the distinction between enhancement-mode and depletion-mode devices. Additionally, review Kirchhoff's voltage and current laws, as these will be essential for analyzing the circuits used in this lab. Students must also complete the pre-lab questions provided in Section 5 and come prepared with a plan for organizing and recording measurement data during the lab session. Proper preparation will ensure efficient use of lab time and deeper understanding of the experimental results.

3 Background Theory

3.1 Metal-Oxide-Semiconductor Field-Effect Transistor (MOSFET)

A metal-oxide-semiconductor field-effect transistor is a four-terminal semiconductor device consisting of a semiconductor substrate with source (S) and drain (D) terminals connected by a channel, whose conductivity is controlled by a voltage applied to the gate (G) terminal. The fourth terminal, the body (B) or substrate, is often connected to the source in discrete devices. MOSFETs are voltage-controlled devices where the gate-source voltage controls the drain current, enabling signal amplification and switching applications. In this lab, we will focus on n-channel enhancement-mode MOSFETs (NMOS), though the principles apply equally to p-channel devices (PMOS) with reversed polarities.

Unlike BJTs, MOSFETs have extremely high input impedance (typically $> 10^{12}$ Ω) because the gate is isolated from the channel by a thin oxide layer. Ideally, no DC current flows into the gate terminal: $i_G = 0$. Therefore, the drain and source currents are equal:

$$i_D = i_S \tag{1}$$

3.1.1 Threshold Voltage and Enhancement Mode

For an n-channel enhancement-mode MOSFET, a minimum gate-source voltage called the threshold voltage V_{th} (or V_{TN} for NMOS, V_{TP} for PMOS) must be applied before a conducting channel forms between source and drain. When $v_{GS} < V_{th}$, the device is in cutoff and $i_D = 0$. The threshold voltage is typically in the range of 0.5 V to 2 V for enhancement-mode devices, depending on the fabrication process.
For $v_{GS} \geq V_{th}$, a channel forms, and current can flow from drain to source (for NMOS, with $v_{DS} > 0$). The effective voltage that controls channel formation is the overdrive voltage:

$$v_{OV} = v_{GS} - V_{th} \tag{2}$$

3.1.2 Saturation Mode Operation

In the saturation mode (also called active mode or pinch-off region), the channel is pinched off at the drain end, and the drain current becomes largely independent of v_{DS}. This is the primary mode for amplification. The condition for saturation mode is:

$$v_{GS} \geq V_{th} \quad \text{and} \quad v_{DS} \geq v_{OV} = v_{GS} - V_{th} \tag{3}$$

In saturation mode, the drain current is given by the square-law relationship:

$$i_D = \frac{1}{2}k_n' \frac{W}{L}(v_{GS} - V_{th})^2 = \frac{1}{2}k_n(v_{GS} - V_{th})^2 \tag{4}$$

where:

- $k_n' = \mu_n C_{ox}$ is the process transconductance parameter (typically 50 to 400 μA/V^2 for discrete devices)
- μ_n is the electron mobility in the channel
- C_{ox} is the gate oxide capacitance per unit area
- W is the channel width
- L is the channel length
- $k_n = k_n'(W/L)$ is the device transconductance parameter

Equation 4 shows that the drain current in saturation is proportional to the square of the overdrive voltage. This quadratic relationship is fundamental to MOSFET behavior.

3.1.3 Channel-Length Modulation

In the saturation region, the drain current is not perfectly independent of v_{DS}, as the simple model of Equation 4 suggests. Due to channel-length modulation, increasing v_{DS} causes the pinch-off point to move slightly toward the source, effectively shortening the channel length and increasing the drain current. This effect can be modeled by:

$$i_D = \frac{1}{2}k_n(v_{GS} - V_{th})^2(1 + \lambda v_{DS}) \tag{5}$$

where λ is the channel-length modulation parameter, typically 0.01 to 0.1 V^{-1} for discrete devices. Channel-length modulation is analogous to the Early effect in BJTs and manifests as a slight upward slope in the output characteristics (i_D vs. v_{DS} curves) in the saturation region. If these curves are extended backward, they intersect the voltage axis at approximately $v_{DS} = -1/\lambda = -V_A$, where V_A is called the Early voltage by analogy.

3.1.4 Triode Mode Operation

In the triode mode (also called linear region or ohmic region), the channel is continuous from source to drain, and the device acts as a voltage-controlled resistor. The condition for triode mode is:

$$v_{GS} \geq V_{th} \quad \text{and} \quad v_{DS} < v_{GS} - V_{th} \tag{6}$$

In triode mode, the drain current is given by:

$$i_D = k_n \left[(v_{GS} - V_{th}) v_{DS} - \frac{1}{2} v_{DS}^2 \right] \tag{7}$$

For small values of v_{DS} (much smaller than $v_{GS} - V_{th}$), the quadratic term can be neglected, and the MOSFET behaves as a linear resistor:

$$i_D \approx k_n (v_{GS} - V_{th}) v_{DS} \tag{8}$$

The effective resistance is:

$$r_{DS} = \frac{v_{DS}}{i_D} \approx \frac{1}{k_n (v_{GS} - V_{th})} \tag{9}$$

This voltage-controlled resistance property is exploited in analog switches and voltage-controlled attenuators.

3.1.5 Regions of Operation

MOSFETs operate in three distinct regions depending on the terminal voltages:
1. Cutoff Region: The gate-source voltage is below the threshold voltage: $v_{GS} < V_{th}$. No inversion layer (channel) forms, and the drain current is negligible: $i_D \approx 0$. The MOSFET is effectively off.

2. Triode Region (Linear/Ohmic): The gate-source voltage exceeds threshold and the drain-source voltage is small: $v_{GS} \geq V_{th}$ and $v_{DS} < v_{GS} - V_{th}$. The device acts as a voltage-controlled resistor, with current given by Equation 7. This region is used for switching applications and analog multiplexers.

3. Saturation Region (Active/Pinch-off): The gate-source voltage exceeds threshold and the drain-source voltage is large enough to pinch off the channel: $v_{GS} \geq V_{th}$ and $v_{DS} \geq v_{GS} - V_{th}$. The current is approximately independent of v_{DS} (except for channel-length modulation) and is given by Equation 4. This is the primary operating region for analog amplifiers.

Note: The terminology can be confusing. The "saturation" region for MOSFETs (constant current, used for amplification) is analogous to the "active" region for BJTs, while the "triode" region for MOSFETs (low voltage drop, used for switching) is analogous to the "saturation" region for BJTs.

3.2 Transfer Characteristic

The transfer characteristic describes the relationship between gate-source voltage and drain current for a fixed drain-source voltage (in saturation). From Equation 4:

$$i_D = \frac{1}{2} k_n (v_{GS} - V_{th})^2 \tag{10}$$

This parabolic relationship is fundamental to MOSFET operation. By plotting i_D versus v_{GS} (with v_{DS} held constant in saturation), we obtain the transfer characteristic. Alternatively, plotting $\sqrt{i_D}$ versus v_{GS} yields a straight line with slope $\sqrt{k_n/2}$ and x-intercept at V_{th}.

3.3 Voltage Transfer Characteristic

The voltage transfer characteristic (VTC) describes the relationship between an input voltage and an output voltage in a circuit. For a simple common-source configuration where the gate voltage is the input and the drain voltage is the output, the VTC demonstrates all three operating regions.
Consider a basic common-source circuit with a drain resistor R_D connected between the drain and supply voltage V_{DD}. The drain voltage is given by:

$$v_D = V_{DD} - i_D R_D \tag{11}$$

As the input voltage (gate voltage v_G) increases:

- **Cutoff region** ($v_{GS} < V_{th}$): The transistor is off, $i_D \approx 0$, so $v_D \approx V_{DD}$.
- **Saturation region** ($V_{th} < v_{GS} <$ some threshold): The transistor conducts, and i_D increases with the square of $(v_{GS} - V_{th})$. The drain voltage decreases as described by Equation 11. In this region, the VTC has a steep negative slope, exhiviting small signal voltage gain.
- **Triode region** (v_{GS} exceeds V_{th}): The transistor enters triode mode when v_{DS} drops below $v_{GS} - V_{th}$.

The VTC is nonlinear and describes how the transistor transitions between states. The steep slope in the saturation region is the basis for small signal voltage amplification.

4 Experimental Procedures

4.1 Part 1: Threshold Voltage and Transconductance Parameter

In this portion of the experiment, the threshold voltage (V_{th}) and transconductance parameter (k_n) of the n-channel MOSFET will be measured. These are the two fundamental parameters that characterize the device.

Begin by identifying the gate, drain, source, and body terminals of the MOSFET using the datasheet or package diagram. The 2N7000 pin configuration from left to right (when looking at the flat side of the TO-92 package) is source, gate, drain. For a typical three-terminal package, the body is internally connected to the source. Construct the circuit shown in Figure 1 on the breadboard, taking care to orient the MOSFET correctly.

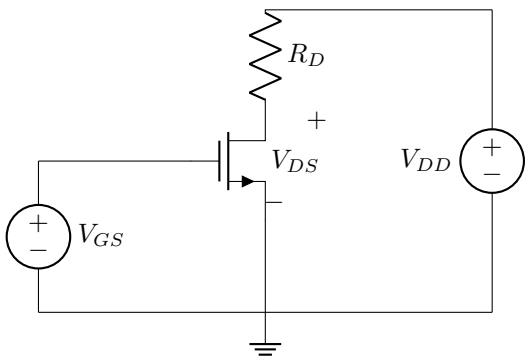

Figure 1: Circuit for measuring threshold voltage and transconductance parameter of an NMOS transistor.

Use $R_D = 1$ kΩ and $V_{DD} = 10$ V. The drain resistor limits the drain current to a safe value and allows easy current measurement via voltage drop.

Use the DMM to measure V_{DS} across the drain-source terminals.
Starting with $V_{GS} = 0$ V, gradually increase V_{GS} from 0 to 5 V in increments of 0.5 V initially. Use finer increments when V_{DS} begins to change rapidly, in order to sufficiently record the transfer characteristic curve. (Obtain V_{DS} values within at least every 1V) Record both voltages in a table.

Calculate the drain current for each voltage using Ohm's law:

$$I_D = \frac{V_{R_D}}{R_D} = \frac{V_{DD} - V_{DS}}{R_D} \tag{12}$$

For each measurement, verify that the transistor is in the saturation region by checking that $V_{DS} \geq V_{GS} - V_{th}$. Initially, V_{th} is unknown, but it can be verified later. If V_{DS} approaches or drops below about 1 V for higher V_{GS} values, the transistor may be entering the triode region, and those points should be excluded from the saturation-mode analysis.

Next, using the data, plot the relationship using both of the following methods.

Method 1: Square-root plot

Plot $\sqrt{I_D}$ (y-axis) versus V_{GS} (x-axis). This is the equation that the curve should follow 4:

$$\sqrt{I_D} = \sqrt{\frac{k_n}{2}}(V_{GS} - V_{th}) \tag{13}$$

In the saturation region where the device is conducting well, this relationship should be linear. Perform a linear fit to the straight-line portion of the curve (typically for $I_D > 0.1$ mA or so, where the square-law model is most accurate). From the fit line determine the following:

- The x-intercept gives V_{th} (where $\sqrt{I_D} = 0$)
- The slope gives $\sqrt{k_n/2}$, from which k_n can be calculated: $k_n = 2 \times (\text{slope})^2$

Method 2: Logarithmic derivative

Alternatively, plot $\log_{10}(I_D)$ versus V_{GS}. In the region just above threshold where the device first turns on (subthreshold region), the current increases approximately exponentially. In the strong inversion region (well above threshold), the slope on the log plot should decrease, reflecting the square-law behavior.

Report

1. Provide a table with columns for V_{GS}, V_{DS}, V_{R_D}, I_D, and $\sqrt{I_D}$.
2. Show the Square-root plot and Logarithmic derivative plot.
3. Report both the threshold voltage V_{th} and the transconductance parameter k_n obtained from the square-root plot, with appropriate units. Compare the measured values with typical values from the datasheet.

4.2 Part 2: Output Characteristics (I_D vs. V_{DS})

In this section, The output characteristics of the MOSFET will be recorded by measuring drain current as a function of drain-source voltage for several fixed values of gate-source voltage. These characteristic curves are fundamental to understanding the 2nd order of MOSFET behavior, namely the channel length modulation effect.

Using the same circuit as Part 1 (Figure 1), a family of curves will be generated, each corresponding to a different fixed gate-source voltage V_{GS}. Use the following three gate-source voltages: $V_{GS} = 2.0$ V, 2.5 V, and 3.0 V.
Note on the $V_{GS} = 3.0$ V curve: At this gate voltage, the overdrive voltage $V_{OV} = V_{GS} - V_{th}$ is large, meaning the saturation boundary ($V_{DS} = V_{GS} - V_{th}$) occurs at a higher V_{DS}. With a fixed V_{DD} of only 5 V and a 1 kΩ drain resistor, the voltage drop across R_D at the higher drain currents may prevent V_{DS} from reaching the saturation boundary. It may not be possible to observe a clear saturation region for this curve

— record what you can and note this limitation in your report.

For each fixed gate-source voltage:

1. Set V_{GS} to the desired value using the power supply.
2. Vary V_{DD} from 0 V to 5 V in increments of 0.5 V.
3. For each V_{DD} setting, measure V_{DS} and calculate I_D.
4. Record all values in a table.

Pay special attention to the following features:

- **Triode region:** At low V_{DS} (typically $V_{DS} < V_{GS} - V_{th}$), the drain current increases approximately linearly with V_{DS}. This is where Equation 7 applies.
- **Saturation region:** For $V_{DS} \geq V_{GS} - V_{th}$, the drain current becomes approximately constant (for a given V_{GS}), with only a slight increase due to channel-length modulation. This is where Equation 4 applies.
- **Boundary:** The transition from triode to saturation occurs approximately when $V_{DS} = V_{GS} - V_{th}$. This boundary can be plotted on the output characteristics.
- **Channel-length modulation:** The slight positive slope of the curves in the saturation region, analogous to the Early effect in BJTs.

The theoretical boundary between triode and saturation is given by:

$$V_{DS} = V_{GS} - V_{th} \tag{14}$$

Using the measured value of V_{th}, plot this boundary line on the output characteristics graph in the report (it will be a straight line with slope 1 when plotted parametrically for different V_{GS} values). Verify that the measured data points transition from triode to saturation near this theoretical boundary.

From one of the curves in the saturation region, estimate the channel-length modulation parameter λ (or equivalently, the Early voltage $V_A = 1/\lambda$). To do this, select one of the curves with moderate current and choose two points well into the saturation region. Calculate the slope:

$$\frac{\Delta I_D}{\Delta V_{DS}} = \frac{1}{2} k_n (V_{GS} - V_{th})^2 \lambda \tag{15}$$

Solve for λ:

$$\lambda = \frac{2\Delta I_D}{k_n (V_{GS} - V_{th})^2 \Delta V_{DS}} \tag{16}$$

Use the previously determined values of k_n and V_{th}. Calculate λ and report $V_A = 1/\lambda$.

Report

1. Table of I_D vs V_{DS}
2. Plot all three curves ($V_{GS} = 2.0$ V, 2.5 V, 3.0 V) on a single graph with V_{DS} on the x-axis and I_D on the y-axis. Clearly label each curve with its corresponding V_{GS} value. On the plot, identify and label the triode region, saturation region, and the boundary between them. Don't forget the V_{th} boundary line. For the $V_{GS} = 3.0$ V curve, note in the report whether saturation was observable and explain why it may not have been.

3. Give the calculated values of λ and $V_A = 1/\lambda$. Compare these with typical values from the datasheet.

4.3 Part 3: Transfer Characteristic (I_D vs. V_{GS})

Characterize the transfer characteristic of the MOSFET in saturation mode, which describes the relationship between gate-source voltage and drain current. This is the most important characteristic for small signal amplifier design.

Using the circuit in Figure 1, set V_{DD} to a fixed value of 10Vto ensure the transistor can remain in the saturation region throughout the measurements. Vary V_{GS} from 0 V to 10V in steps of $.5V$.
For each V_{GS} value:

1. Measure V_{DS} and verify saturation mode: $V_{DS} \geq V_{GS} - V_{th}$.
2. Calculate I_D.

Note on triode region at large V_{GS}: As V_{GS} increases, the drain current rises and the voltage drop across R_D grows, pulling V_{DS} down. At sufficiently large V_{GS}, V_{DS} will fall below $V_{GS} - V_{th}$, and the transistor will enter the triode region. Data points where this occurs must be **excluded** from Plot 2 (which assumes saturation), though they may still be included in Plot 1 to show the full characteristic. You will likely observe this transition for larger V_{GS} values in this sweep.

Create a table with columns for V_{GS}, V_{DS}, I_D, and $\sqrt{I_D}$. Note that in this common-source circuit, V_{DS} is also the output voltage of the amplifier ($V_{out} = V_{DS}$) and V_{GS} is the input ($V_{in} = V_{GS}$). **This dataset will be reused in Part 4 to construct the voltage transfer characteristic.** Using this data, generate the following two plots:

Plot 1: Standard transfer characteristic. Plot I_D (y-axis) versus V_{GS} (x-axis). This should show the characteristic parabolic shape: approximately zero current below V_{th}, then increasing with the square of $(V_{GS} - V_{th})$ above threshold.

Plot 2: Square-root plot. Plot $\sqrt{I_D}$ (y-axis) versus V_{GS} (x-axis). Using only the saturation-region points, this should be approximately linear. Perform a linear fit and determine:

- The x-intercept, which gives V_{th}
- The slope, which gives $\sqrt{k_n/2}$, from which $k_n = 2 \times (\text{slope})^2$

Compare these values with those obtained in Part 1. They should be consistent.
Examine the quality of the linear fit by calculating the coefficient of determination (R^2). A value close to 1 indicates that the square-law model fits the data well. Some deviation from a perfect fit is expected — the following are possible contributing factors for reference; you are not expected to know these in detail:

- Finite output resistance (channel-length modulation)
- Measurement errors and resolution
- Temperature variations during measurement

Report

1. Provide the table of data used and the two plots with clear labels.
2. Compare the V_{th} and k_n values obtained here with those from Part 1. Calculate the percentage variation between methods.
3. Report the R^2 value for the Plot 2 linear fit.
4. Discuss how the gate voltage controls the channel charge density, which in turn controls the drain current.

4.4 Part 4: Voltage Transfer Characteristic

In this section, the voltage transfer characteristic (VTC) of the common-source configuration from Part 3 will be analyzed. The VTC illustrates how the circuit transitions between cutoff, saturation, and triode regions as the input voltage is varied. This is a fundamental characteristic that underlies the operation of both amplifiers and digital logic circuits.

No new measurements are required. The circuit used in Part 3 (Figure 1) is equivalent to the common-source amplifier shown in Figure 2 — the gate voltage V_{GS} is the input and the drain voltage V_{DS} is the output. Use the Part 3 dataset directly: for each data point, the VTC coordinates are simply $V_{in} = V_{GS}$ and $V_{out} = V_{DS}$, with $V_{DD} = 10$ V and $R_D = 1$ kΩ.

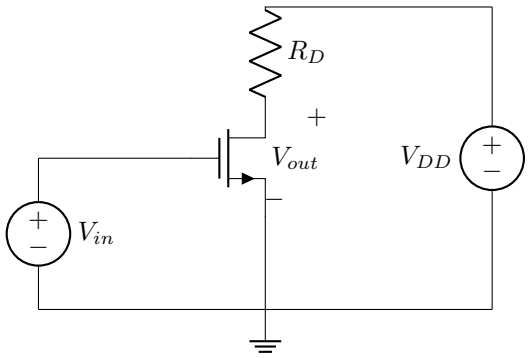

Figure 2: Common-source configuration for voltage transfer characteristic measurement. Input is applied to gate; output is measured at drain.

Using the Part 3 dataset, identify the following three regions in the data:

1. **Cutoff ($V_{in} < V_{th}$):** Transistor is off, $I_D \approx 0$, and $V_{out} \approx V_{DD} = 10$ V.
2. **Saturation ($V_{th} < V_{in}$ and $V_{out} \geq V_{in} - V_{th}$):** V_{out} decreases steeply as V_{in} increases — this is the amplification region.
3. **Triode ($V_{out} < V_{in} - V_{th}$):** V_{out} is low and relatively insensitive to further increases in V_{in}.

The saturation-to-triode transition occurs when $V_{out} = V_{in} - V_{th}$. Identify this point in the dataset.
Calculate the incremental voltage gain at several points in the saturation region:

$$|A_v| = \left| \frac{\Delta V_{out}}{\Delta V_{in}} \right| \tag{17}$$

Use closely spaced data points (e.g., at $V_{in} = V_{th} + 0.5$ V, $V_{th} + 1.0$ V, etc.) and note how the gain varies with bias point.

Report

1. **Please record a video demonstration, or alternately show the lab TA. If recording a video, it should include your face, the circuit functioning, a single measurement, and a brief explanation of what you're doing. Submit this in the *Lab04 Demo* assignment on Canvas.**
2. Plot of the VTC with V_{in} on the x-axis and V_{out} on the y-axis. Label the three regions and mark the transition points and incremental gain values.
3. Discuss the significance of the VTC. Consider for analog amplifiers, the saturation region provides gain.

5 Pre-Lab Questions

Complete these questions before coming to the lab session. Include the answers and all supporting work in the lab report.

1. For the circuit in Figure 1, assume $V_{GS} = 3.0$ V, $V_{DD} = 5$ V, $R_D = 1$ kΩ, $k_n = 2$ mA/V^2, $V_{th} = 1.5$ V, and $\lambda = 0$. Calculate:

   (a) The overdrive voltage V_{OV}

   (b) The drain current I_D assuming saturation mode

   (c) The drain-source voltage V_{DS}

   (d) Verify whether the transistor is indeed in the saturation region

   (e) The power dissipated in the transistor

   Show all calculations.

2. Explain in your own words the difference between the cutoff, triode, and saturation regions of MOSFET operation. For each region, state:

   (a) The condition on V_{GS} relative to V_{th}

   (b) The condition on V_{DS} relative to $(V_{GS} - V_{th})$

   (c) Whether the drain current is approximately zero, proportional to V_{DS}, or independent of V_{DS}

   (d) The typical application (amplification, switching on, switching off)