I–V and Voltage Transfer Characteristics of MOSFET

Lab 4 — ECEN 222: Electronic Circuits II-CE

University of Nebraska–Lincoln
Department of Electrical and Computer Engineering

1 Objectives

The primary objective of this lab is to investigate the fundamental current-voltage (I-V) characteristics and voltage transfer characteristics of metal-oxide-semiconductor field-effect transistors (MOSFETs). Upon completion of this lab, students will understand the relationship between gate-source voltage, drain current, and drain-source voltage in MOSFET operation, measure and characterize the device transconductance parameter (k_n) and threshold voltage (V_{th}), map the complete output characteristics showing all regions of MOSFET operation (cutoff, triode, and saturation), characterize the transfer characteristics relating gate voltage to drain current, and analyze the voltage transfer characteristic of a simple common-source configuration. Through hands-on measurements and analysis, students will develop a thorough understanding of the fundamental I-V relationships that govern MOSFET behavior, which will serve as the foundation for subsequent labs on biasing, amplifiers, and frequency response.

2 Pre-Lab Preparation

Before arriving at the lab session, students are required to thoroughly prepare by reading the relevant material from the course textbook. Specifically, read Chapter 4 (MOS Field-Effect Transistors) in Sedra & Smith, paying special attention to sections covering MOSFET device structure and physical operation, terminal characteristics in saturation mode, operation in triode and cutoff modes, and the current-voltage characteristics. Focus on understanding the square-law relationship between gate-source voltage and drain current, the concept of threshold voltage, and the distinction between enhancement-mode and depletion-mode devices. Additionally, review Kirchhoff's voltage and current laws, as these will be essential for analyzing the circuits used in this lab. Students must also complete the pre-lab questions provided in Section 5 and come prepared with a plan for organizing and recording measurement data during the lab session. Proper preparation will ensure efficient use of lab time and deeper understanding of the experimental results.

3 Background Theory

3.1 Metal-Oxide-Semiconductor Field-Effect Transistor (MOSFET)

A metal-oxide-semiconductor field-effect transistor is a four-terminal semiconductor device consisting of a semiconductor substrate with source (S) and drain (D) terminals connected by a channel, whose conductivity is controlled by a voltage applied to the gate (G) terminal. The fourth terminal, the body (B) or substrate, is often connected to the source in discrete devices. MOSFETs are voltage-controlled devices where the gate-source voltage controls the drain current, enabling signal amplification and switching applications. In this lab, we will focus on n-channel enhancement-mode MOSFETs (NMOS), though the principles apply equally to p-channel devices (PMOS) with reversed polarities.

Unlike BJTs, MOSFETs have extremely high input impedance (typically $> 10^{12}$ Ω) because the gate is isolated from the channel by a thin oxide layer. Ideally, no DC current flows into the gate terminal: $i_G = 0$. Therefore, the drain and source currents are equal:

$$i_D = i_S \tag{1}$$

3.1.1 Threshold Voltage and Enhancement Mode

For an n-channel enhancement-mode MOSFET, a minimum gate-source voltage called the threshold voltage V_{th} (or V_{TN} for NMOS, V_{TP} for PMOS) must be applied before a conducting channel forms between source and drain. When $v_{GS} < V_{th}$, the device is in cutoff and $i_D = 0$. The threshold voltage is typically in the range of 0.5 V to 2 V for enhancement-mode devices, depending on the fabrication process.
For $v_{GS} \geq V_{th}$, a channel forms, and current can flow from drain to source (for NMOS, with $v_{DS} > 0$). The effective voltage that controls channel formation is the overdrive voltage:

$$v_{OV} = v_{GS} - V_{th} \tag{2}$$

3.1.2 Saturation Mode Operation

In the saturation mode (also called active mode or pinch-off region), the channel is pinched off at the drain end, and the drain current becomes largely independent of v_{DS}. This is the primary mode for amplification. The condition for saturation mode is:

$$v_{GS} \geq V_{th} \quad \text{and} \quad v_{DS} \geq v_{OV} = v_{GS} - V_{th} \tag{3}$$

In saturation mode, the drain current is given by the square-law relationship:

$$i_D = \frac{1}{2}k_n' \frac{W}{L}(v_{GS} - V_{th})^2 = \frac{1}{2}k_n(v_{GS} - V_{th})^2 \tag{4}$$

where:

- $k_n' = \mu_n C_{ox}$ is the process transconductance parameter (typically 50 to 400 μA/V^2 for discrete devices)
- μ_n is the electron mobility in the channel
- C_{ox} is the gate oxide capacitance per unit area
- W is the channel width
- L is the channel length
- $k_n = k_n'(W/L)$ is the device transconductance parameter

Equation 4 shows that the drain current in saturation is proportional to the square of the overdrive voltage. This quadratic relationship is fundamental to MOSFET behavior.

3.1.3 Channel-Length Modulation

In the saturation region, the drain current is not perfectly independent of v_{DS}, as the simple model of Equation 4 suggests. Due to channel-length modulation, increasing v_{DS} causes the pinch-off point to move slightly toward the source, effectively shortening the channel length and increasing the drain current. This effect can be modeled by:

$$i_D = \frac{1}{2}k_n(v_{GS} - V_{th})^2(1 + \lambda v_{DS}) \tag{5}$$

where λ is the channel-length modulation parameter, typically 0.01 to 0.1 V^{-1} for discrete devices. Channel-length modulation is analogous to the Early effect in BJTs and manifests as a slight upward slope in the

output characteristics (i_D vs. v_{DS} curves) in the saturation region. If these curves are extended backward, they intersect the voltage axis at approximately $v_{DS} = -1/\lambda = -V_A$, where V_A is called the Early voltage by analogy.

3.1.4 Triode Mode Operation

In the triode mode (also called linear region or ohmic region), the channel is continuous from source to drain, and the device acts as a voltage-controlled resistor. The condition for triode mode is:

$$v_{GS} \geq V_{th} \quad \text{and} \quad v_{DS} < v_{GS} - V_{th} \tag{6}$$

In triode mode, the drain current is given by:

$$i_D = k_n \left[(v_{GS} - V_{th}) v_{DS} - \frac{1}{2} v_{DS}^2 \right] \tag{7}$$

For small values of v_{DS} (much smaller than $v_{GS} - V_{th}$), the quadratic term can be neglected, and the MOSFET behaves as a linear resistor:

$$i_D \approx k_n (v_{GS} - V_{th}) v_{DS} \tag{8}$$

The effective resistance is:

$$r_{DS} = \frac{v_{DS}}{i_D} \approx \frac{1}{k_n (v_{GS} - V_{th})} \tag{9}$$

This voltage-controlled resistance property is exploited in analog switches and voltage-controlled attenuators.

3.1.5 Regions of Operation

MOSFETs operate in three distinct regions depending on the terminal voltages:
1. Cutoff Region: The gate-source voltage is below the threshold voltage: $v_{GS} < V_{th}$. No inversion layer (channel) forms, and the drain current is negligible: $i_D \approx 0$. The MOSFET is effectively off.

2. Triode Region (Linear/Ohmic): The gate-source voltage exceeds threshold and the drain-source voltage is small: $v_{GS} \geq V_{th}$ and $v_{DS} < v_{GS} - V_{th}$. The device acts as a voltage-controlled resistor, with current given by Equation 7. This region is used for switching applications and analog multiplexers.

3. Saturation Region (Active/Pinch-off): The gate-source voltage exceeds threshold and the drain-source voltage is large enough to pinch off the channel: $v_{GS} \geq V_{th}$ and $v_{DS} \geq v_{GS} - V_{th}$. The current is approximately independent of v_{DS} (except for channel-length modulation) and is given by Equation 4. This is the primary operating region for analog amplifiers.

Note: The terminology can be confusing. The "saturation" region for MOSFETs (constant current, used for amplification) is analogous to the "active" region for BJTs, while the "triode" region for MOSFETs (low voltage drop, used for switching) is analogous to the "saturation" region for BJTs.

3.2 Transfer Characteristic

The transfer characteristic describes the relationship between gate-source voltage and drain current for a fixed drain-source voltage (in saturation). From Equation 4:

$$i_D = \frac{1}{2} k_n (v_{GS} - V_{th})^2 \tag{10}$$

This parabolic relationship is fundamental to MOSFET operation. By plotting i_D versus v_{GS} (with v_{DS} held constant in saturation), we obtain the transfer characteristic. Alternatively, plotting $\sqrt{i_D}$ versus v_{GS} yields a straight line with slope $\sqrt{k_n/2}$ and x-intercept at V_{th}.

3.3 Voltage Transfer Characteristic

The voltage transfer characteristic (VTC) describes the relationship between an input voltage and an output voltage in a circuit. For a simple common-source configuration where the gate voltage is the input and the drain voltage is the output, the VTC demonstrates all three operating regions.
Consider a basic common-source circuit with a drain resistor R_D connected between the drain and supply voltage V_{DD}. The drain voltage is given by:

$$v_D = V_{DD} - i_D R_D \tag{11}$$

As the input voltage (gate voltage v_G) increases:

- **Cutoff region** ($v_{GS} < V_{th}$): The transistor is off, $i_D \approx 0$, so $v_D \approx V_{DD}$.
- **Saturation region** ($V_{th} < v_{GS} <$ some threshold): The transistor conducts, and i_D increases with the square of $(v_{GS} - V_{th})$. The drain voltage decreases as described by Equation 11. In this region, the VTC has a steep negative slope, exhiviting small signal voltage gain.
- **Triode region** (v_{GS} exceeds V_{th}): The transistor enters triode mode when v_{DS} drops below $v_{GS} - V_{th}$.

The VTC is nonlinear and describes how the transistor transitions between states. The steep slope in the saturation region is the basis for small signal voltage amplification.

4 Experimental Procedures

4.1 Part 1: Threshold Voltage and Transconductance Parameter

In this portion of the experiment, the threshold voltage (V_{th}) and transconductance parameter (k_n) of the n-channel MOSFET will be measured. These are the two fundamental parameters that characterize the device.

Begin by identifying the gate, drain, source, and body terminals of the MOSFET using the datasheet or package diagram. The 2N7000 pin configuration from left to right (when looking at the flat side of the TO-92 package) is source, gate, drain. For a typical three-terminal package, the body is internally connected to the source. Construct the circuit shown in Figure 1 on the breadboard, taking care to orient the MOSFET correctly.

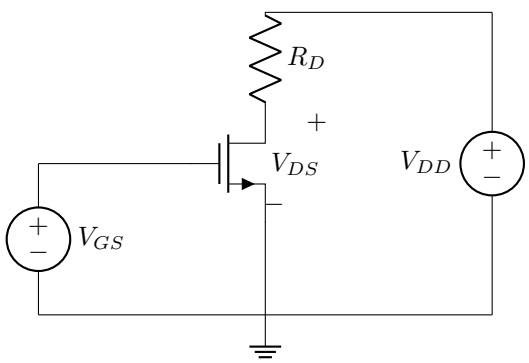

Figure 1: Circuit for measuring threshold voltage and transconductance parameter of an NMOS transistor.

Use $R_D = 1$ kΩ and $V_{DD} = 10$ V. The drain resistor limits the drain current to a safe value and allows easy current measurement via voltage drop.

Use the DMM to measure: (1) V_{DS} directly across the drain-source terminals and (2) the voltage across R_D to determine I_D.

Starting with $V_{GS} = 0$ V, gradually increase V_{GS} from 0 to 5 V in increments of 0.25 V initially. Take finer increments (0.1 V or 0.05 V) in the region where the device begins to turn on (typically 0.5 V to 3 V, depending on the specific transistor). For each value of V_{GS}, record:

- V_{GS} (gate-source voltage)
- V_{DS} (drain-source voltage)
- Voltage across R_D

Calculate the drain current for each using Ohm's law:

$$I_D = \frac{V_{R_D}}{R_D} = \frac{V_{DD} - V_{DS}}{R_D} \tag{12}$$

For each measurement, verify that the transistor is in the saturation region by checking that $V_{DS} \geq V_{GS} - V_{th}$. Initially, V_{th} is unknown, but it can be verified later. If V_{DS} approaches or drops below about 1 V for higher V_{GS} values, the transistor may be entering the triode region, and those points should be excluded from the saturation-mode analysis.

Next, using the data, plot the relationship using both of the following methods.

Method 1: Square-root plot

Plot $\sqrt{I_D}$ (y-axis) versus V_{GS} (x-axis). This is the equation that the curve should follow 4:

$$\sqrt{I_D} = \sqrt{\frac{k_n}{2}}(V_{GS} - V_{th}) \tag{13}$$

In the saturation region where the device is conducting well, this relationship should be linear. Perform a linear fit to the straight-line portion of the curve (typically for $I_D > 0.1$ mA or so, where the square-law model is most accurate). From the fit line determine the following:

- The x-intercept gives V_{th} (where $\sqrt{I_D} = 0$)
- The slope gives $\sqrt{k_n/2}$, from which k_n can be calculated: $k_n = 2 \times (\text{slope})^2$

Method 2: Logarithmic derivative

Alternatively, plot $\log_{10}(I_D)$ versus V_{GS}. In the region just above threshold where the device first turns on (subthreshold region), the current increases approximately exponentially. In the strong inversion region (well above threshold), the slope on the log plot should decrease, reflecting the square-law behavior.

Report

1. Provide a table with columns for V_{GS}, V_{DS}, V_{R_D}, I_D, and $\sqrt{I_D}$.
2. Show the Square-root plot and Logarithmic derivative plot.
3. Report both the threshold voltage V_{th} and the transconductance parameter k_n obtained from the square-root plot, with appropriate units. Compare the measured values with typical values from the datasheet.

4.2 Part 2: Output Characteristics (I_D vs. V_{DS})

In this section, The output characteristics of the MOSFET will be recorded by measuring drain current as a function of drain-source voltage for several fixed values of gate-source voltage. These characteristic curves are fundamental to understanding the 2nd order of MOSFET behavior, namely the channel length modulation effect.

Using the same circuit as Part 1 (Figure 1), a family of curves will be generated, each corresponding to a different fixed gate-source voltage V_{GS}. Select three different gate-source voltages that span from just above threshold to well into strong conduction. For example, if $V_{th} \approx 1.5$ V, one might choose: $V_{GS} = 1.5$ V (cutoff), 2.5 V, and 3.5 V. Adjust these values based on the measured V_{th} from Part 1.

For each fixed gate-source voltage:

1. Set V_{GS} to the desired value using the power supply.
2. Vary V_{DD} from 0 V to 5 V in increments of 0.5 V. Take smaller increments (0.2 - 0.25 V) in the region between about 0 to 2 V where the transition from triode to saturation mode occurs.
3. For each V_{DD} setting, measure V_{DS} and the voltage across R_D, then calculate I_D.
4. Record all values in a table.

Pay special attention to the following features:

- **Triode region:** At low V_{DS} (typically $V_{DS} < V_{GS} - V_{th}$), the drain current increases approximately linearly with V_{DS}. This is where Equation 7 applies.
- **Saturation region:** For $V_{DS} \geq V_{GS} - V_{th}$, the drain current becomes approximately constant (for a given V_{GS}), with only a slight increase due to channel-length modulation. This is where Equation 4 applies.
- **Boundary:** The transition from triode to saturation occurs approximately when $V_{DS} = V_{GS} - V_{th}$. This boundary can be plotted on the output characteristics.
- **Channel-length modulation:** The slight positive slope of the curves in the saturation region, analogous to the Early effect in BJTs.

The theoretical boundary between triode and saturation is given by:

$$V_{DS} = V_{GS} - V_{th} \tag{14}$$

Using the measured value of V_{th}, plot this boundary line on the output characteristics graph in the report (it will be a straight line with slope 1 when plotted parametrically for different V_{GS} values). Verify that the measured data points transition from triode to saturation near this theoretical boundary.

From one of the curves in the saturation region, estimate the channel-length modulation parameter λ (or equivalently, the Early voltage $V_A = 1/\lambda$). To do this, select one of the curves with moderate current and choose two points well into the saturation region. Calculate the slope:

$$\frac{\Delta I_D}{\Delta V_{DS}} = \frac{1}{2} k_n (V_{GS} - V_{th})^2 \lambda \tag{15}$$

Solve for λ:

$$\lambda = \frac{2\Delta I_D}{k_n (V_{GS} - V_{th})^2 \Delta V_{DS}} \tag{16}$$

Use the previously determined values of k_n and V_{th}. Calculate λ and report $V_A = 1/\lambda$.

Report

1. Table of I_D vs V_{DS}
2. Plot all three curves on a single graph with V_{DS} on the x-axis and I_D on the y-axis. Clearly label each curve with its corresponding V_{GS} value. On the plot, identify and label the triode region, saturation region, and the boundary between them. Don't forget the V_{th} boundary line.
3. Give the calculated values of λ and $V_A = 1/\lambda$. Compare these with typical values from the datasheet.

4.3 Part 3: Transfer Characteristic (I_D vs. V_{GS})

Characterize the transfer characteristic of the MOSFET in saturation mode, which describes the relationship between gate-source voltage and drain current. This is the most important characteristic for small signal amplifier design.

Using the circuit in Figure 1, set V_{DD} to a fixed value of 10Vto ensure the transistor can remain in the saturation region throughout the measurements. Vary V_{GS} from 0 V to 10V in steps of $.5V$.
For each V_{GS} value:

1. Measure V_{DS} to verify saturation mode. $V_{DS} \geq V_{GS} - V_{th}$
2. Measure the voltage across R_D and calculate I_D.

Create a table with columns for V_{GS}, V_{DS}, I_D, and $\sqrt{I_D}$. Using this data, generate the following three plots:

Plot 1: Standard transfer characteristic. Plot I_D (y-axis) versus V_{GS} (x-axis). This should show the characteristic parabolic shape: approximately zero current below V_{th}, then increasing with the square of $(V_{GS} - V_{th})$ above threshold.

Plot 2: Square-root plot. Plot $\sqrt{I_D}$ (y-axis) versus V_{GS} (x-axis). This should be approximately linear in the saturation region. Perform a linear fit and determine:

- The x-intercept, which gives V_{th}
- The slope, which gives $\sqrt{k_n/2}$

Compare these values with those obtained in Part 1. They should be consistent.

Plot 3: I_D versus $(V_{GS} - V_{th})^2$. Using the measured value of V_{th}, plot I_D versus $(V_{GS} - V_{th})^2$. This should be a straight line passing through the origin with slope $k_n/2$ according to Equation 4. Perform a linear fit and determine k_n from the slope. Compare with the previous determinations.

Report

1. Provide the table of data used and the three plots with clear labels.
2. Discuss the accuracy and consistency of the three different methods for determining V_{th} and k_n. Calculate the percentage variation between methods.

4.4 Part 4: Voltage Transfer Characteristic

In this section, the voltage transfer characteristic (VTC) of a basic common-source configuration will be measured. The VTC illustrates how the circuit transitions between cutoff, saturation, and triode regions as the input voltage is varied. This is a fundamental characteristic that underlies the operation of both amplifiers and digital logic circuits.

Construct the circuit shown in Figure 2. This is a simplified version of the previous circuit where the gate is driven directly by an input voltage source.

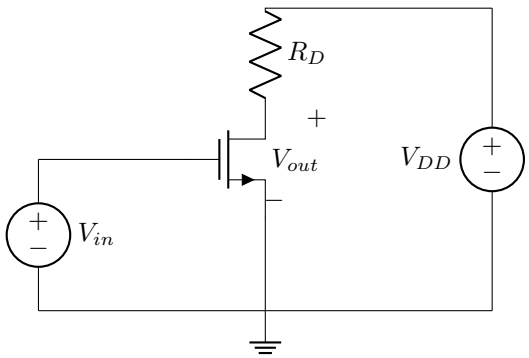

Figure 2: Common-source configuration for voltage transfer characteristic measurement. Input is applied to gate; output is measured at drain.

Use $R_D = 1$ kΩ and $V_{DD} = 5$ V. Connect V_{in} directly to the gate of the transistor. Measure V_{out} at the drain with respect to ground. Note that $V_{out} = V_{DS}$ in this configuration since the source is grounded.

Vary V_{in} from 0 V to 5 V in increments appropriate to capture the transitions. Use fine increments (0.1 V) in the region around V_{th} where the device turns on, and where the transition from saturation to triode occurs. Use larger increments elsewhere (for example, .5V). For each input voltage, record both:

- V_{in} (V_{GS} in this case)
- V_{out} (V_{DS} in this case)

Record $I_D = (V_{DD} - V_{out})/R_D$ for later analysis.

Observe how V_{out} changes as V_{in} increases. The following three distinct regions should be seen:

1. **Cutoff region ($V_{in} < V_{th}$):** The transistor is off, $I_D \approx 0$, and $V_{out} \approx V_{DD} = 5$ V.
2. **Saturation region (approximately $0 < V_{in} - Vth < V_{DS}$):** The transistor conducts, and V_{out} decreases as V_{in} increases. The relationship is nonlinear (due to the square-law), but the slope is steep, representing high voltage gain. This is the amplification region.
3. **Triode region ($V_{in} - V_{th} > V_{DS}$):** The transistor enters triode mode when V_{out} drops below $V_{in} - V_{th}$ (i.e., when $V_{DS} < V_{GS} - V_{th}$). In this region, V_{out} is low and relatively insensitive to further increases in V_{in}.

Plot the voltage transfer characteristic with V_{in} on the x-axis and V_{out} on the y-axis. Clearly identify and label the three regions of operation on the plot.
Next calculate the slope (voltage gain magnitude) in the saturation region. Since the relationship is nonlinear, the gain varies. Then calculate the incremental gain at several points:

$$|A_v| = \left|\frac{\Delta V_{out}}{\Delta V_{in}}\right| \tag{17}$$

Select two closely spaced points in the saturation region and calculate this slope. Do this for several locations (e.g., at $V_{in} = V_{th} + 0.5$ V, $V_{in} = V_{th} + 1.0$ V, etc.). Note how the gain magnitude varies with bias point.
Identify the transition points: (1) the input voltage at which the transistor begins to conduct appreciably (cutoff-to-saturation transition, approximately V_{th}), and (2) the input voltage at which triode mode begins (saturation-to-triode transition).
The transition from saturation to triode occurs when:

$$V_{out} = V_{in} - V_{th} \tag{18}$$

Verify this relationship by finding the point on the VTC where the output voltage equals the input voltage minus the threshold voltage.

Report

1. **Please record a video demonstration, or alternately show the lab TA. If recording a video, it should include your face (to verify you recorded it), the circuit functioning, a single measurement, and a breif explaination of what you're doing. Submit this in the *Lab04 Demo* assignment on Canvas.**
2. Plot of the VTC. Indicate the slope, incremental gain, and transition points.
3. Discuss the significance of the VTC for both analog and digital applications.

   Note: For analog amplifiers, operation in the saturation region is desired for linearity and gain; for digital logic circuits (inverters), rapid transition between cutoff (V_{out} high) and triode (V_{out} low) is desired, with well-defined logic levels.

4.5 Part 5: Verification of Square-Law Relationship

In this final section, verify the square-law relationship between drain current and gate-source voltage given by Equation 4 in saturation mode.

From the measurements in Part 3, the V_{GS} and I_D values for the saturation region were obtained. For each measurement point where the saturation condition $V_{DS} \geq V_{GS} - V_{th}$ is satisfied, calculate the overdrive voltage:

$$V_{OV} = V_{GS} - V_{th} \tag{19}$$

using the previously determined value of V_{th}.

Create a plot with $V_{OV}^2 = (V_{GS} - V_{th})^2$ on the x-axis and I_D on the y-axis. According to Equation 4, this plot should yield a straight line passing through the origin, with slope $k_n/2$:

$$I_D = \frac{k_n}{2} V_{OV}^2 \tag{20}$$

Perform a linear fit to the data. Ideally, force the fit through the origin, though one can also perform an unforced fit to see if there is a significant non-zero intercept, which would indicate deviation from the ideal model.

From the slope of the fitted line, determine k_n:

$$k_n = 2 \times \text{slope} \tag{21}$$

Examine the quality of the linear fit. Calculate the coefficient of determination (R^2 value). A value close to 1 indicates that the square-law model fits the data well. If R^2 is significantly less than 0.99, discuss possible reasons for deviation from the ideal square-law behavior in the lab report. Consider:

- Finite output resistance (channel-length modulation)
- Velocity saturation effects at high gate voltages
- Body effect (if body is not connected to source)
- Measurement errors and resolution
- Temperature variations during measurement

Report

1. Provide the plot of I_D vs V_{OV}^2 with the linear fit.
2. Provide the experimental k_n value and compare it with the values determined in Parts 1 and 3. Calculate the percentage variation between the different methods. Discuss the consistency of the results.
3. R^2 value, and discussion about deviation.
4. Breifly discuss sources of error that might affect these measurements. Consider factors such as meter accuracy, contact resistance, temperature variations, and deviations from ideal MOSFET behavior (particularly at low and high current levels).
5. Explain the physical origin of the square-law relationship. Discuss how the gate voltage controls the channel charge density, which in turn controls the drain current. Relate this to the MOS capacitor model and the gradual channel approximation.

5 Pre-Lab Questions

Complete these questions before coming to the lab session. Include the answers and all supporting work in the lab report.

1. For the circuit in Figure 1, assume $V_{GS} = 3.0$ V, $V_{DD} = 5$ V, $R_D = 1$ kΩ, $k_n = 2$ mA/V^2, $V_{th} = 1.5$ V, and $\lambda = 0$. Calculate:
   (a) The overdrive voltage V_{OV}
   (b) The drain current I_D assuming saturation mode
   (c) The drain-source voltage V_{DS}
   (d) Verify whether the transistor is indeed in the saturation region

(e) The power dissipated in the transistor

Show all calculations.

2. Explain in your own words the difference between the cutoff, triode, and saturation regions of MOSFET operation. For each region, state:

   (a) The condition on V_{GS} relative to V_{th}

   (b) The condition on V_{DS} relative to $(V_{GS} - V_{th})$

   (c) Whether the drain current is approximately zero, proportional to V_{DS}, or independent of V_{DS}

   (d) The typical application (amplification, switching on, switching off)