# Assignment 05
# Operational Amplifier Applications

ECEN 222, Spring 2026

University of Nebraska-Lincoln

## Overview

This assignment focuses on operational amplifier circuits and their applications. You will analyze various op-amp configurations using pencil-and-paper calculations, then verify your results using Multisim simulation. Understanding op-amp circuits is fundamental to analog circuit design, signal processing, and instrumentation.

**Unipolar Power Supply Configuration**

**All circuits in this assignment use UNIPOLAR power supplies** (not dual supplies):

- Power supply voltage: $V_{DD} = 15$ V (positive supply)
- Ground (GND): 0 V
- **AC Ground (Reference Voltage):** $V_{ref} = \frac{V_{DD}}{2} = 7.5$ V

In Multisim, you must connect a 7.5 V DC voltage source to these nodes. This provides the DC bias point that allows the op-amp to swing both 'positive' and 'negative' around 7.5 V with a unipolar supply.

## Submission Requirements

Submit a **single PDF document** containing:

- All hand-written or typed calculations with clear steps shown
- Written explanations and assumptions
- Multisim screenshots with component values and measurements visible
- Comparison of calculated vs. simulated results with percent error

## Software Requirements

- **Multisim:** Available through the NI Academic Site License. Download from `https://www.ni.com/` or use computers in the lab.

# Part 1: Inverting Amplifier Analysis [30 points]

Analyze the following inverting amplifier circuit.

### Circuit Specifications:

- Op-amp: LM741 (or similar general-purpose op-amp)
- Input resistor: $R_1 = 10$ kΩ
- Feedback resistor: $R_f = 47$ kΩ
- Input voltage: $v_{in} = 8.0$ V DC (referenced to AC ground as +0.5V, since 8 - 7.5 V = 0.5 V)
- Power supply: $V_{DD} = 15$ V, GND = 0 V
- AC ground (reference): $V_{ref} = 7.5$ V (at non-inverting input)

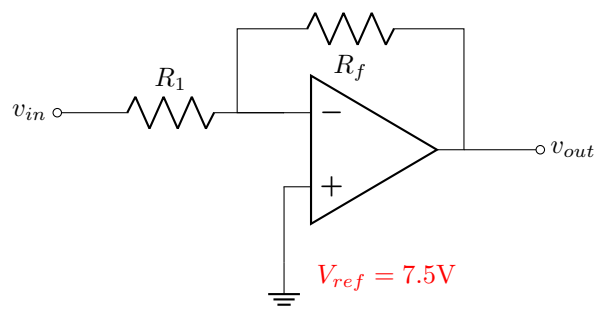


Figure 1: Inverting amplifier circuit (AC ground at $V_{ref} = 7.5$ V)

### Analysis Tasks:

**1.1 Theoretical Analysis [15 points]:** Using pencil and paper, calculate:

- The voltage gain $A_v = \frac{v_{out}}{v_{in}}$
- The input impedance $R_{in}$
- The output voltage $v_{out}$ for the given input

**Solution:**
**Voltage Gain:**

For an inverting amplifier, the gain is:

$$A_v = -\frac{R_f}{R_1} = -\frac{47 \text{ k}\Omega}{10 \text{ k}\Omega} = -4.7$$

**Input Impedance:**

The input impedance seen by the source is simply $R_1$ (since the inverting input is at virtual ground):

$$R_{in} = R_1 = 10 \text{ k}\Omega$$

**Output Voltage:**

The input voltage referenced to AC ground is:

$$v_{in,ac} = v_{in} - V_{ref} = 8.0 - 7.5 = 0.5 \text{ V}$$

The output referenced to AC ground:

$$v_{out,ac} = A_v \cdot v_{in,ac} = -4.7 \times 0.5 = -2.35 \text{ V}$$

The absolute output voltage (referenced to GND):

$$v_{out} = V_{ref} + v_{out,ac} = 7.5 + (-2.35) = 5.15 \text{ V}$$

**1.2 Assumptions and Explanation [10 points]:** In a written paragraph, explain:

- What assumptions you made about the op-amp (list all ideal op-amp assumptions)
- Why the circuit is called an "inverting" amplifier
- How the virtual ground concept applies to this circuit (note: the inverting input will be at 7.5 V, not 0 V)
- Why we need the AC ground reference at 7.5 V for unipolar supply operation
- What would happen if $R_f < R_1$ (would it still be an amplifier?)

**Solution:**
**Ideal Op-Amp Assumptions:**

(a) Infinite input impedance (no current flows into op-amp inputs)
(b) Zero output impedance (can source/sink any current)
(c) Infinite open-loop gain ($A_{OL} \to \infty$)
(d) Infinite bandwidth (gain constant at all frequencies)
(e) Zero offset voltage (when inputs equal, output is zero)

**Why "Inverting":** The circuit is called inverting because the output signal is 180° out of phase with the input signal. When the input increases above $V_{ref}$, the output decreases below $V_{ref}$, and vice versa. The negative sign in $A_v = -4.7$ indicates this phase inversion.

**Virtual Ground Concept:** In this circuit, the non-inverting input is connected to $V_{ref} = 7.5$ V. Due to negative feedback and infinite gain, the inverting input is forced to the same voltage as the non-inverting input, creating a "virtual AC ground" at 7.5 V. This is NOT 0 V (true ground), but it acts as a reference point that remains constant as signals vary around it.

**Why AC Ground at 7.5 V:** With a unipolar supply (0 V to 15 V), the op-amp can only output voltages within this range. Setting the reference at $V_{ref} = V_{DD}/2 = 7.5$ V allows the output to swing both "positive" (toward 15 V) and "negative" (toward 0 V) around this midpoint, maximizing the dynamic range.

**If $R_f < R_1$:** If $R_f < R_1$, the magnitude of the gain would be less than 1 ($|A_v| < 1$). The circuit would still invert the signal, but it would attenuate rather than amplify. For example,

if $R_f = 5$ kΩ and $R_1 = 10$ kΩ, then $A_v = -0.5$ — this is an inverting attenuator, not an amplifier.

**1.3 Design Question [5 points]:** If you needed a gain of $A_v = -20$ and wanted to keep $R_1 = 10$ kΩ, what value should $R_f$ be? Show your calculation.

**Solution:**
Using the gain formula for an inverting amplifier:

$$\begin{aligned} A_v &= -\frac{R_f}{R_1} \\ -20 &= -\frac{R_f}{10\ \text{k}\Omega} \\ R_f &= 20 \times 10\ \text{k}\Omega = 200\ \text{k}\Omega \end{aligned}$$

**Answer:** $R_f = 200$ kΩ

## Part 2: Integrator Circuit Analysis [30 points]

Analyze the following inverting integrator circuit.

### Circuit Specifications:

- Input resistor: $R = 100$ kΩ
- Feedback capacitor: $C = 1$ $\mu$F
- Input voltage: $v_{in} = 9.0$ V DC (constant, referenced to AC ground)
- Power supply: $V_{DD} = 15$ V, GND = 0 V
- AC ground (reference): $V_{ref} = 7.5$ V (at non-inverting input)
- Initial condition: Assume $v_{out}(0) = 7.5$ V (at AC ground)

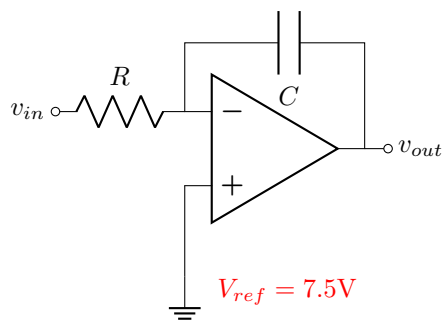


Figure 2: Inverting integrator circuit (AC ground at $V_{ref} = 7.5$ V)

### Analysis Tasks:

**2.1 Theoretical Analysis [15 points]:** Using pencil and paper, calculate:

- The time constant $\tau = RC$
- The output voltage as a function of time: $v_{out}(t) = -\frac{1}{RC}\int_0^t (v_{in} - V_{ref})d\tau + v_{out}(0)$
- Note: Since $v_{in}$ is constant at 9.0 V and $V_{ref} = 7.5$ V, the effective input is $(v_{in} - V_{ref}) = 1.5$ V
- Calculate $v_{out}$ at $t = 0.05$ s and $t = 0.1$ s
- How long until the output reaches 5.0 V (referenced to GND, not to $V_{ref}$)?

**Solution:**
**Time Constant:**

$$\tau = RC = (100 \times 10^3\,\Omega)(1 \times 10^{-6}\text{ F}) = 0.1\text{ s}$$

**Output Voltage Function:**

The effective input relative to AC ground is:

$$v_{in,eff} = v_{in} - V_{ref} = 9.0 - 7.5 = 1.5\text{ V}$$

For a constant input, the integrator output is:

$$\begin{aligned} v_{out}(t) &= -\frac{1}{RC}\int_0^t v_{in,eff}\,d\tau + v_{out}(0) \\ &= -\frac{1}{RC}\cdot v_{in,eff}\cdot t + v_{out}(0) \\ &= -\frac{1.5}{0.1}\cdot t + 7.5 \\ &= -15t + 7.5 \text{ V} \end{aligned}$$

**At $t = 0.05$ s:**

$$v_{out}(0.05) = -15(0.05) + 7.5 = -0.75 + 7.5 = 6.75 \text{ V}$$

**At $t = 0.1$ s:**

$$v_{out}(0.1) = -15(0.1) + 7.5 = -1.5 + 7.5 = 6.0 \text{ V}$$

**Time to reach 5.0 V:**

$$\begin{aligned} 5.0 &= -15t + 7.5 \\ 15t &= 2.5 \\ t &= \frac{2.5}{15} = 0.167 \text{ s} = 167 \text{ ms} \end{aligned}$$

**2.2 Circuit Operation Explanation [15 points]:** Explain:

- How the integrator works (describe the relationship between capacitor current and output voltage)
- Why the output voltage changes over time even with a constant DC input
- What the negative sign in the transfer function means
- Why we use $(v_{in} - V_{ref})$ instead of just $v_{in}$ in our calculations
- What would happen if you applied a step input (instead of DC) to an integrator

**Solution:**
**How the Integrator Works:**

The inverting input is at virtual AC ground (7.5 V). Current flows through $R$ from the input: $i = \frac{v_{in}-V_{ref}}{R}$. This current cannot flow into the op-amp (infinite input impedance), so it must flow into the capacitor. The capacitor equation is $i = C\frac{dv}{dt}$, which means $v_{out} = -\frac{1}{C}\int i\,dt$. Combining these gives the integrator transfer function.

**Why Output Changes with Constant DC Input:**

Even though the input is constant DC, there is a constant current flowing through $R$ into the capacitor. This constant current continuously charges (or discharges) the capacitor, causing the voltage across it to change linearly over time. The integrator integrates the DC offset

relative to $V_{ref}$, resulting in a ramp output. In an ideal integrator with DC input, the output would eventually saturate at the power supply rail.

**Negative Sign Meaning:**

The negative sign indicates phase inversion. When the input is above $V_{ref}$ (positive), current flows into the capacitor's negative plate, causing the output voltage to decrease (ramp downward). Conversely, when input is below $V_{ref}$, the output ramps upward. This is characteristic of inverting op-amp configurations.

**Why $(v_{in} - V_{ref})$:**

We use $(v_{in} - V_{ref})$ because the inverting input is held at $V_{ref}$ by the virtual ground principle. Only the voltage difference drives current through $R$. If $v_{in} = V_{ref} = 7.5$ V, then $(v_{in} - V_{ref}) = 0$, no current flows, and the output remains constant. The circuit integrates relative to the AC ground reference.

**Step Input Response:**

If a step input is applied, the integrator produces a ramp output. For a positive step (sudden increase), the output ramps down linearly. For a negative step (sudden decrease), the output ramps up linearly. The slope of the ramp is determined by $-\frac{\Delta V_{in}}{RC}$. This is why integrators are used in waveform generation (e.g., triangle waves from square waves).

**2.3 Frequency Response [BONUS: 5 points]:** The integrator's frequency domain transfer function is $H(j\omega) = -\frac{1}{j\omega RC}$. Calculate the magnitude of the gain $|H(f)|$ at $f = 10$ Hz. Show your work and explain in 1-2 sentences what this tells you about the integrator's behavior at different frequencies.

**Solution:**
The magnitude of the transfer function is:

$$|H(j\omega)| = \left| -\frac{1}{j\omega RC} \right| = \frac{1}{\omega RC} = \frac{1}{2\pi f RC}$$

At $f = 10$ Hz with $R = 100$ k$\Omega$ and $C = 1$ $\mu$F:

$$\begin{aligned} |H(10 \text{ Hz})| &= \frac{1}{2\pi(10)(100 \times 10^3)(1 \times 10^{-6})} \\ &= \frac{1}{2\pi(10)(0.1)} \\ &= \frac{1}{2\pi} = \frac{1}{6.283} \approx 0.159 \text{ or } 15.9\% \end{aligned}$$

**Interpretation:** The integrator has a gain that decreases with increasing frequency ($-20$ dB/decade slope). At low frequencies, the gain is high, amplifying low-frequency signals and DC offsets significantly. At high frequencies, the gain is low, attenuating high-frequency components. This makes the integrator act as a low-pass filter.

## Part 3: Summing Amplifier Analysis [40 points]

Analyze the following three-input summing amplifier circuit.

### Circuit Specifications:

- Input resistors: $R_1 = 10$ kΩ, $R_2 = 20$ kΩ, $R_3 = 5$ kΩ
- Feedback resistor: $R_f = 20$ kΩ
- Input voltages: $v_1 = 8.5$ V DC, $v_2 = 8.0$ V DC, $v_3 = 7.0$ V DC
- Power supply: $V_{DD} = 15$ V, GND = 0 V
- AC ground (reference): $V_{ref} = 7.5$ V (at non-inverting input)

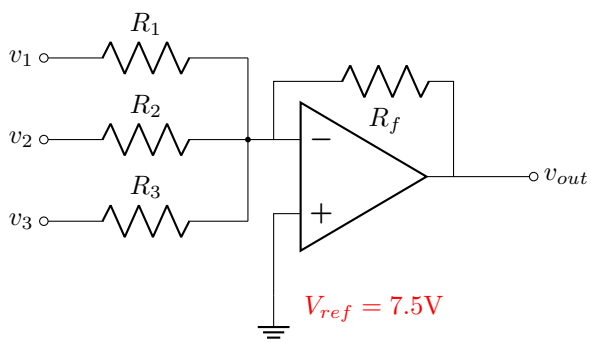


Figure 3: Three-input summing amplifier (AC ground at $V_{ref} = 7.5$ V)

### Analysis Tasks:

**3.1 Theoretical Analysis [20 points]:** Using pencil and paper, calculate:

- The weight (gain coefficient) for each input: $w_1 = \frac{R_f}{R_1}$, $w_2 = \frac{R_f}{R_2}$, $w_3 = \frac{R_f}{R_3}$
- The output voltage using: $v_{out} = -\left(\frac{R_f}{R_1}v_1 + \frac{R_f}{R_2}v_2 + \frac{R_f}{R_3}v_3\right)$
- Verify your calculation by substituting the given input voltages

**Solution:**
**Weight Coefficients:**

$$w_1 = \frac{R_f}{R_1} = \frac{20\text{ k}\Omega}{10\text{ k}\Omega} = 2.0$$
$$w_2 = \frac{R_f}{R_2} = \frac{20\text{ k}\Omega}{20\text{ k}\Omega} = 1.0$$
$$w_3 = \frac{R_f}{R_3} = \frac{20\text{ k}\Omega}{5\text{ k}\Omega} = 4.0$$

**Output Voltage Calculation:**

First, convert inputs to AC voltages (relative to $V_{ref} = 7.5$ V):

$$\begin{aligned} v_{1,ac} &= v_1 - V_{ref} = 8.5 - 7.5 = 1.0 \text{ V} \\ v_{2,ac} &= v_2 - V_{ref} = 8.0 - 7.5 = 0.5 \text{ V} \\ v_{3,ac} &= v_3 - V_{ref} = 7.0 - 7.5 = -0.5 \text{ V} \end{aligned}$$

The output relative to $V_{ref}$:

$$\begin{aligned} v_{out,ac} &= -(w_1 v_{1,ac} + w_2 v_{2,ac} + w_3 v_{3,ac}) \\ &= -(2.0 \times 1.0 + 1.0 \times 0.5 + 4.0 \times (-0.5)) \\ &= -(2.0 + 0.5 - 2.0) \\ &= -0.5 \text{ V} \end{aligned}$$

The absolute output voltage (referenced to GND):

$$v_{out} = V_{ref} + v_{out,ac} = 7.5 + (-0.5) = 7.0 \text{ V}$$

**Verification using absolute voltages:**

$$\begin{aligned} v_{out} &= V_{ref} - \left( \frac{R_f}{R_1}(v_1 - V_{ref}) + \frac{R_f}{R_2}(v_2 - V_{ref}) + \frac{R_f}{R_3}(v_3 - V_{ref}) \right) \\ &= 7.5 - (2.0(1.0) + 1.0(0.5) + 4.0(-0.5)) \\ &= 7.5 - 0.5 = 7.0 \text{ V} \quad \checkmark \end{aligned}$$

**3.2 Circuit Operation Explanation [15 points]:** Explain:

- How the summing amplifier works (describe the current flow from each input)
- Why the inverting input is at virtual AC ground (7.5 V)
- Why the output is inverted and weighted
- What happens if all three inputs are at $V_{ref}$ (7.5 V) - what would the output be?
- Give one practical application where a summing amplifier would be useful

**Solution:**
**How the Summing Amplifier Works:**

Current flows from each input through its respective resistor toward the inverting input (virtual ground at 7.5 V). The current from input $i$ is $i_i = \frac{v_i - V_{ref}}{R_i}$. Since no current flows into the op-amp (infinite input impedance), all input currents sum together and flow through the feedback resistor $R_f$. By KCL at the inverting node: $i_1 + i_2 + i_3 = i_f$. The voltage across $R_f$ creates the output: $v_{out} - V_{ref} = -i_f R_f$.

**Virtual AC Ground:**

The non-inverting input is connected to $V_{ref} = 7.5$ V. Due to negative feedback and the op-amp's infinite gain, the inverting input is forced to match this voltage. This creates a

"virtual AC ground" at 7.5 V. It's called virtual because no current flows into the op-amp terminal, yet the voltage remains fixed at 7.5 V, serving as a stable reference point for the circuit.

**Inverted and Weighted Output:**

The output is inverted because current flowing into the inverting node (from positive input voltages) must flow out through $R_f$, pulling the output below $V_{ref}$. Each input is weighted by its ratio $\frac{R_f}{R_i}$, meaning inputs with smaller resistors have larger weights (contribute more to the output). This allows precise control of how much each signal contributes to the sum.

**All Inputs at $V_{ref}$:**

If $v_1 = v_2 = v_3 = V_{ref} = 7.5$ V, then $(v_i - V_{ref}) = 0$ for all inputs. No current flows through any input resistor, so $i_f = 0$, and $v_{out} = V_{ref} = 7.5$ V. The output remains at the AC ground reference.

**Practical Application:**

Audio mixing consoles use summing amplifiers to combine multiple audio signals (microphones, instruments) into a single output channel. Each input can be weighted differently (volume control) by choosing appropriate resistor values, and the mixed signal can be inverted back if needed with another stage.

**3.3 Design Modification [5 points]:** If you wanted all three inputs to have equal weight (equal gain), what should the values of $R_1$, $R_2$, and $R_3$ be? State your answer and briefly explain your reasoning.

**Solution:**
For equal weights, we need:

$$w_1 = w_2 = w_3 \quad \Rightarrow \quad \frac{R_f}{R_1} = \frac{R_f}{R_2} = \frac{R_f}{R_3}$$

This requires:

$$R_1 = R_2 = R_3$$

**Answer:** All three input resistors should be equal. A practical choice would be $R_1 = R_2 = R_3 = 20$ kΩ (equal to $R_f$), which gives each input a weight of $w = 1.0$.

**Reasoning:** Since the weight for each input is $w_i = \frac{R_f}{R_i}$, making all input resistors equal ensures all weights are equal. Choosing them equal to $R_f$ gives unity weight, meaning each input contributes equally to the inverted sum. For example, if $R_1 = R_2 = R_3 = R_f = 20$ kΩ, then $v_{out} = -(v_1 + v_2 + v_3)$ (referenced to AC ground).

## Part 4: Multisim Simulation and Verification [Bonus: 20 points]

Choose **ONE** of the three circuits from Parts 1-3 to build and simulate in Multisim.

### Simulation Tasks:

**4.1 Circuit Construction [5 points]:** Build your chosen circuit in Multisim showing:

- Op-amp (use LM741 or similar from the library)
- All resistors (and capacitor for integrator) with correct values clearly labeled
- DC voltage source(s) for input(s)
- **Unipolar power supply:** $V_{DD} = 15$ V to $V+$ pin, GND (0 V) to $V-$ pin
- **AC ground source:** 7.5 V DC source connected to the non-inverting (+) input
- Multimeter or probe at the output to measure $v_{out}$

Include a clear screenshot of your complete circuit.

**4.2 DC Operating Point Analysis [10 points]:**

- Run a DC Operating Point analysis or use multimeters to measure the output voltage
- Capture a screenshot showing the measured output voltage
- Compare your simulated result to your hand-calculated theoretical value
- Calculate the percent error.

**4.3 Analysis and Discussion [5 points]:** In a short paragraph, discuss:

- How close your simulation matched your calculations
- Possible reasons for any discrepancy (real vs. ideal op-amp)
- What you learned from building and simulating the circuit
- Any challenges you encountered in Multisim

**Solution:**

**Expected Simulation Results:**

- **Part 1 (Inverting Amplifier):** The simulated output should be very close to the calculated 5.15 V. Real op-amps have finite gain (typically 100,000 for LM741), which may cause a small error (¡ 1%). The output may also show a slight offset voltage (typically ± few mV).
- **Part 2 (Integrator):** In transient analysis, the output should ramp down linearly from 7.5 V at a rate of -15 V/s. At $t = 0.05$ s, expect $\approx 6.75$ V; at $t = 0.1$ s, expect $\approx 6.0$ V. In practice, the integrator may saturate toward the lower rail if run too long. Real op-amps have input bias currents that can cause drift.
- **Part 3 (Summing Amplifier):** The simulated output should be very close to 7.0 V. Small discrepancies (¡ 1%) can arise from resistor tolerances (use exact values in simulation) and op-amp imperfections (finite gain, offset voltage).

**Common Discrepancies:**

- Finite open-loop gain causes small gain errors.
- Input offset voltage (1-5 mV for LM741) shifts the output slightly.
- Input bias current causes voltage drops across high-value resistors.
- Slew rate limitations affect transient response (not DC steady-state).

**Key Learning Points:** Students should observe that real op-amps behave very close to ideal for these low-frequency DC circuits. The virtual ground concept can be verified by probing the inverting input (should measure 7.5 V). Understanding the unipolar supply configuration is crucial for single-supply designs.