Common-Source Amplifier

Lab 5 — ECEN 222: Electronic Circuits II-CE

University of Nebraska–Lincoln
Department of Electrical and Computer Engineering

1 Objectives

The primary objective of this lab is to design, construct, and characterize the common-source (CS) amplifier, one of the fundamental MOSFET amplifier configurations. Upon completion of this lab, students will understand how to design and bias a common-source amplifier for specific DC operating points using a DC-offset power supply, measure and characterize voltage gain, input impedance, and output impedance of the CS amplifier, observe the effects of load resistance on amplifier gain and understand output impedance implications, and compare experimental measurements with theoretical predictions based on DC bias calculations and AC small-signal models. Through hands-on design and measurement, students will develop practical skills in MOSFET amplifier circuits essential for analog signal processing systems.

2 Pre-Lab Preparation

Before arriving at the lab session, students are required to thoroughly prepare by reading the relevant material from the course textbook. Specifically, read Chapter 4 (MOS Field-Effect Transistors) in Sedra & Smith, focusing on sections covering the common-source amplifier configuration including DC bias design, small-signal equivalent circuits and the T-model, and derivation of voltage gain and input/output impedances. Pay particular attention to the concept of the transconductance parameter g_m, the small-signal output resistance r_o, and how these parameters relate to amplifier performance. Additionally, review basic AC circuit analysis, Thévenin equivalent circuits, and voltage divider concepts, as these will be essential for analyzing the amplifier circuits. Students must also complete the pre-lab questions provided in Section 5, which include design calculations for the circuits to be built. Bring these calculations to lab—they will guide your circuit construction. Proper preparation will ensure efficient use of lab time and deeper understanding of the experimental results.

3 Background Theory

This section provides the fundamental theory of the common-source amplifier configuration, including DC biasing considerations and small-signal AC analysis. Understanding these concepts is essential for designing and analyzing the amplifier performance in the lab.

3.1 Common-Source Amplifier

The common-source (CS) amplifier is the most widely used MOSFET amplifier configuration, analogous to the common-emitter amplifier for BJTs. It provides voltage gain with signal inversion (180° phase shift), high input impedance, and moderate output impedance. The basic CS amplifier consists of a MOSFET with a drain resistor, appropriate biasing, and AC coupling for signal injection and extraction.

3.1.1 DC Biasing

Proper DC biasing establishes the quiescent operating point (Q-point) of the transistor in the saturation region, where it can provide linear amplification. In this lab, we use a simplified approach with a DC-offset power supply directly driving the gate, eliminating the need for AC coupling capacitors and gate biasing resistors.

In this lab, we will use a DC-offset power supply to directly provide the gate voltage V_G, which includes both the DC bias and the small AC signal. This eliminates the need for AC coupling capacitors and gate voltage divider resistors, simplifying the circuit while maintaining the essential amplifier functionality.

The simplified CS amplifier configuration is shown in Figure 1.

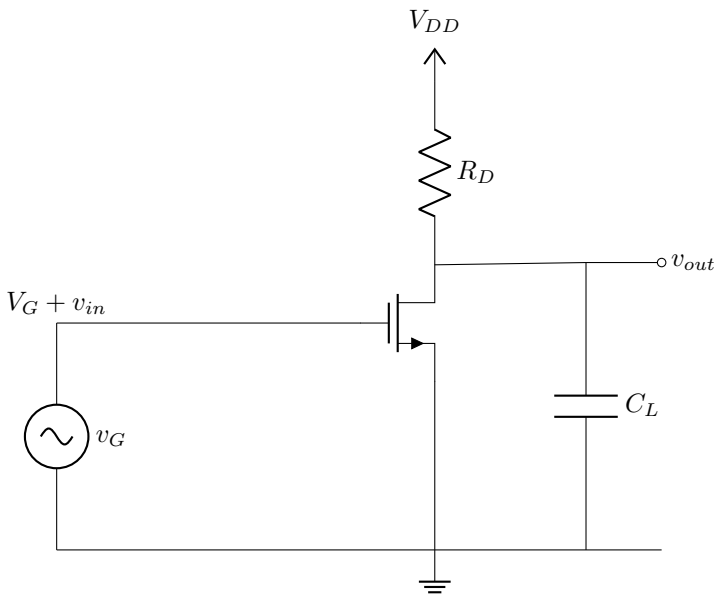

Figure 1: Simplified common-source amplifier with DC-offset gate supply and capacitive load.

The DC analysis proceeds as follows. The gate voltage V_G is set directly by the DC-offset power supply. Since the gate draws negligible DC current ($I_G \approx 0$) and the source is directly connected to ground ($V_S = 0$), the gate-source voltage is simply:

$$V_{GS} = V_G \tag{1}$$

Assuming the MOSFET is in saturation, the drain current is:

$$I_D = \frac{1}{2}k_n(V_{GS} - V_{th})^2 = \frac{1}{2}k_n(V_G - V_{th})^2 \tag{2}$$

The drain voltage is determined by the voltage drop across R_D:

$$V_D = V_{DD} - I_D R_D \tag{3}$$

And the drain-source voltage is:

$$V_{DS} = V_D - V_S = V_D = V_{out} \tag{4}$$

For saturation mode operation (required for highest amplification), we must ensure:

$$V_{DS} \geq V_{GS} - V_{th} = V_{OV} \tag{5}$$

where $V_{OV} = V_{GS} - V_{th}$ is the overdrive voltage. Typically, designing for $V_{DS} = V_{DD}/2$ provides good signal swing capability.

3.1.2 Small-Signal Analysis

For small AC signals superimposed on the DC bias point, we use small-signal analysis to derive the voltage gain and impedance characteristics of the amplifier. This analysis assumes the AC signal is small enough that the transistor operates in the linear region of its transfer characteristic.

For small AC signals superimposed on the DC bias point, we can use small-signal analysis. The small-signal equivalent circuit replaces the MOSFET with its small-signal model, and all DC sources are set to zero (short-circuited for voltage sources, open-circuited for current sources). The output coupling capacitor C_L is assumed to be a short circuit at the signal frequency.

The key small-signal parameters are:

Transconductance:

$$g_m = \left.\frac{\partial i_D}{\partial v_{GS}}\right|_Q = k_n(V_{GS} - V_{th}) = \sqrt{2k_n I_D} \tag{6}$$

The transconductance relates the small-signal drain current to the small-signal gate-source voltage. It is a function of the bias point through I_D or equivalently V_{GS}.

Output resistance:

$$r_o = \frac{1}{\lambda I_D} = \frac{V_A}{I_D} \tag{7}$$

where λ is the channel-length modulation parameter and $V_A = 1/\lambda$ is the Early voltage. For many discrete transistors, r_o is large (tens of kΩ), often allowing it to be neglected in first-order analysis.

The small-signal model of the MOSFET consists of a voltage-controlled current source $g_m v_{gs}$ between drain and source, with the output resistance r_o in parallel. The gate has infinite input impedance.

For the simplified CS amplifier with the source grounded, the small-signal equivalent circuit shows the drain current is $i_d = g_m v_{gs}$. The output voltage at the drain is:

$$v_d = -i_d(R_D \parallel r_o) = -g_m v_{gs}(R_D \parallel r_o) \tag{8}$$

Since $v_{gs} = v_{in}$ (the source is at AC ground), the voltage gain from gate to drain is:

$$A_v = \frac{v_d}{v_{in}} = -g_m(R_D \parallel r_o) \tag{9}$$

The negative sign indicates signal inversion. If $r_o \gg R_D$ (often the case), this simplifies to:

$$A_v \approx -g_m R_D \tag{10}$$

With a load resistor R_L connected through the output coupling capacitor C_L, the effective load becomes $R_D \parallel R_L$, and the voltage gain to the output becomes:

$$A_v = -g_m(R_D \parallel R_L \parallel r_o) \approx -g_m(R_D \parallel R_L) \tag{11}$$

This shows that the output impedance of the CS amplifier affects its performance when driving loads.

Input impedance: The input impedance at the gate is extremely high because the gate draws no DC current and minimal AC current. The DC-offset source has its own output impedance R_{sig}, which forms part of the signal path, but the MOSFET gate itself presents infinite impedance:

$$R_{in} \approx \infty \tag{12}$$

Output impedance: Looking back into the drain with the input set to zero (AC ground), the output impedance is:

$$R_{out} = R_D \parallel r_o \approx R_D \tag{13}$$

This is typically in the range of a few kΩ, which can cause significant loading effects when driving low-impedance loads.

4 Experimental Procedures

The experimental procedures guide you through designing, building, and characterizing a common-source amplifier. You will verify DC biasing, measure voltage gain, and investigate loading effects systematically.

4.1 Part 1: DC Biasing and Operating Point of CS Amplifier

In this part, you will set up the DC operating point of the CS amplifier using a DC-offset power supply to provide the gate bias voltage. Proper DC biasing ensures the transistor operates in the saturation region for linear amplification.

In this first part, you will design, construct, and verify the DC operating point of a common-source amplifier. Begin by selecting your MOSFET and determining its parameters k_n and V_{th} from Lab 4 measurements or datasheet values. Choose a target operating point with $I_D \approx 2$ mA and $V_{DS} \approx V_{DD}/2 = 2.5$ V ($V_{DD} = 5$ V).
Using the simplified design equations from the Background Theory section, calculate the required values. A typical design procedure is:

1. Choose $V_{DD} = 5$ V.
2. Choose target $I_D = 2$ mA and $V_{DS} = 2.5$ V (half the supply voltage for maximum swing).
3. Calculate required $V_G = V_{GS}$ from Equation 2:

$$V_G = V_{GS} = V_{th} + \sqrt{\frac{2I_D}{k_n}} \tag{14}$$

4. Calculate R_D to achieve the desired V_{DS}:

$$R_D = \frac{V_{DD} - V_{DS}}{I_D} = \frac{V_{DD} - V_D}{I_D} \tag{15}$$

   where $V_D = V_{DS}$ since the source is grounded.

Complete these calculations in the pre-lab with your specific transistor parameters. Construct the circuit on your breadboard following Figure 1. Use a DC power supply with offset capability (or two power supplies in series) to provide both the DC bias voltage V_G and the small AC signal superimposed on it. You may initially apply only the DC voltage for DC analysis.

Measure and record the following DC voltages:

- V_G (gate voltage, set by your DC-offset supply)
- V_D (drain voltage)

Calculate from these measurements:

- $V_{GS} = V_G$ (since source is grounded)
- $V_{DS} = V_D$ (since source is grounded)
- $I_D = (V_{DD} - V_D)/R_D$

Verify that:

1. The transistor is in saturation: $V_{DS} \geq V_{GS} - V_{th}$
2. The measured I_D is close to your design target (within 20% is acceptable given component tolerances)

If the operating point is significantly off, identify the discrepancy. You may need to adjust V_G or R_D to achieve the target operating point. Document any changes.

In your lab report, create a table comparing designed vs. measured values for all DC quantities. Calculate percentage errors. Discuss sources of error.

Calculate the small-signal parameters at your measured Q-point:

$$g_m = k_n(V_{GS} - V_{th}) = \sqrt{2k_n I_D} \tag{16}$$

$$r_o = \frac{V_A}{I_D} \tag{17}$$

(Use V_A from Lab 4). These parameters will be used to predict AC gain.

Report

1. Provide a table comparing expected vs. measured values for all DC quantities: V_G, V_D, V_{DS}, V_{GS}, I_D, and calculated g_m and r_o.
2. Verify and document that the transistor is in saturation mode ($V_{DS} \geq V_{GS} - V_{th}$).
3. Discuss sources of error in the DC operating point measurements.

4.2 Part 2: AC Voltage Gain of CS Amplifier

In this part, you will measure the AC voltage gain of the CS amplifier by superimposing a small AC signal on the DC gate bias. The simplified circuit allows you to directly observe amplification without the complexity of coupling capacitors.

Now you will measure the AC voltage gain of the common-source amplifier. Add the output coupling capacitor C_L to your circuit (between the drain and load resistor). Choose a large capacitor (e.g., 10 μF to 100 μF) to ensure it acts as a short circuit at the signal frequencies you'll use (e.g., 1 kHz).

Configure your DC-offset power supply to provide the DC bias V_G plus a small AC signal superimposed on it. Set the AC component to be a sine wave at 1 kHz with amplitude approximately 10-20 mV peak (20-40 mV peak-to-peak). This small amplitude ensures the transistor will show linear operation without distortion. You can gradually increase amplitude while monitoring for distortion on an oscilloscope.

Important: Make sure to set the waveform generator output impedance to **High-Z** (high impedance) mode, not 50 Ω. If set to 50 Ω, the generator assumes a matched 50 Ω load and will display twice the actual output voltage. Since the MOSFET gate presents a very high impedance load, High-Z mode ensures the displayed

voltage matches the actual output.

Initially, do not connect a load resistor ($C_L = \infty$, or equivalently, open circuit at the output).

Measure the AC voltages using an oscilloscope:

- v_{in}: Measure the AC component at the gate. This is your input signal.
- v_{out}: Measure the AC component at the output (after C_L).

Measure the peak-to-peak amplitude of both signals. Verify that the output is inverted (180° phase shift) relative to the input.

Calculate the voltage gain:

$$A_v^{measured} = \frac{V_{out,pp}}{V_{in,pp}} \tag{18}$$

The gain should be negative, reflecting the inversion. Report the magnitude.

Compare with the theoretical prediction from Equation 10:

$$A_v^{theoretical} = -g_m R_D \tag{19}$$

Calculate the percentage error. Discuss agreement or discrepancy. Factors affecting agreement include:

- Accuracy of g_m calculation (depends on k_n, V_{th}, and measured I_D)
- Finite output resistance r_o (if $r_o \approx R_D$, the approximation $A_v \approx -g_m R_D$ breaks down)
- Parasitic capacitances at higher frequencies
- Measurement accuracy

Gradually increase the input signal amplitude and observe the output waveform. At some point, you will see clipping or distortion. This occurs when the transistor enters triode region (bottom clipping) or cutoff region (top clipping). Note the maximum undistorted output swing. This is limited by the DC bias point and supply voltage.

Include oscilloscope screenshots showing input and output waveforms, clearly labeled or annotated. The oscilloscopes have USB ports to save professional quality images on flash drives.

Report

1. Provide a table summarizing measured g_m, theoretical A_v, measured A_v, and percentage error.
2. Include oscilloscope screenshots showing input and output waveforms with clear labels indicating amplitude and phase relationship.
3. Report the maximum undistorted output swing observed before clipping occurs.
4. Compare theoretical gain ($A_v = -g_m R_D$) with measured gain and discuss factors affecting agreement (accuracy of parameters, finite r_o, measurement errors).

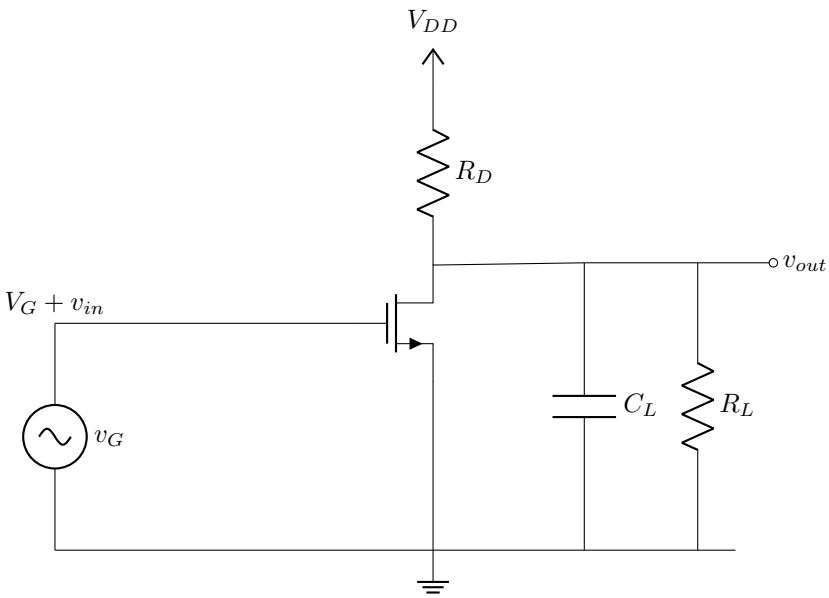

Figure 2: Common-source amplifier with resistive and capacitive load for measuring loading effect.

4.3 Part 3: Loading Effect and Output Impedance

This part investigates how connecting different load resistances affects the amplifier's voltage gain, demonstrating the importance of output impedance in practical applications.

In this part, you will investigate the effect of load resistance on the amplifier gain and experimentally determine the output impedance.
With the circuit from Part 2, connect various load resistors R_L from the output to ground. Use the following values: 10 kΩ, 2.2 kΩ, and 470 Ω.
For each load resistor:

1. Apply the same input signal as Part 2 (1 kHz, small amplitude).
2. Measure v_{in} and v_{out}.
3. Calculate the voltage gain $A_v = v_{out}/v_{in}$.
4. Record the results.

You should observe that as R_L decreases, the gain magnitude decreases. This is the loading effect.

The theoretical gain with load is (from Equation 11):

$$A_v = -g_m(R_D \parallel R_L) \tag{20}$$

For each load value, calculate the theoretical gain and compare with measurement.

The output impedance can be determined from the measurement. The unloaded gain is:

$$A_v^{NL} = -g_m R_{out} \tag{21}$$

where R_{out} is the output impedance (approximately R_D if r_o is large). The loaded gain is:

$$A_v^{L} = -g_m(R_{out} \parallel R_L) \tag{22}$$

The ratio is:

$$\frac{A_v^L}{A_v^{NL}} = \frac{R_{out} \parallel R_L}{R_{out}} = \frac{R_L}{R_{out} + R_L} \tag{23}$$

Rearranging:

$$R_{out} = R_L \left(\frac{A_v^{NL}}{A_v^L} - 1 \right) \tag{24}$$

Use this equation with your measurements for several load values to calculate R_{out}. Compare with the expected value (approximately R_D).

In your lab report, create a table with columns: R_L, $A_v^{measured}$, $A_v^{theoretical}$, percentage error. Plot $|A_v|$ versus R_L on a semi-log scale (log axis for R_L). This clearly shows the loading effect.

Report the measured output impedance and compare with R_D. Discuss the practical implication: the CS amplifier has moderate output impedance and requires careful consideration of load when maximum gain is needed.

Report

1. Create a table with columns: R_L, $A_v^{measured}$, $A_v^{theoretical}$, and percentage error for each load resistor value tested.
2. Plot $|A_v|$ versus R_L on a semi-log scale (log axis for R_L) to clearly show the loading effect.
3. Calculate and report the measured output impedance R_{out} using the equation provided. Compare with the expected value (approximately R_D).
4. Discuss the loading effect and explain why the gain decreases as R_L decreases.
5. Explain the practical implications of the CS amplifier's output impedance when driving loads.

5 Pre-Lab Questions

Complete these questions before coming to the lab session. Include your answers and all supporting work in your lab report. Use your MOSFET parameters from Lab 4 (k_n and V_{th}).

1. **Simplified common-source amplifier design:** Design a CS amplifier with the following specifications: $V_{DD} = 5$ V, $I_D = 2$ mA, $V_{DS} = 2.5$ V. Assume $k_n = 2$ mA/V^2 and $V_{th} = 1.5$ V (or use your measured values from Lab 4).
   (a) Calculate the required $V_G = V_{GS}$ using the saturation equation.
   (b) Determine R_D to achieve the desired V_{DS}.
   (c) Verify that the transistor will be in saturation ($V_{DS} \geq V_{GS} - V_{th}$).
   (d) Calculate the small-signal parameters g_m and r_o (assume $V_A = 50$ V).
   (e) Predict the voltage gain $A_v = -g_m R_D$ (assuming $r_o \gg R_D$).

   Show all calculations and clearly indicate your final values for V_G and R_D.
2. **Loading effect analysis:** For the CS amplifier designed in Question 1:
   (a) Calculate the theoretical voltage gain when driving a load of $R_L = 1$ kΩ. Use $A_v = -g_m(R_D \parallel R_L)$.
   (b) By what percentage does the gain decrease compared to the no-load case?

(c) What load resistance would reduce the gain to half its no-load value?

3. **Output impedance:** For the CS amplifier designed in Question 1:

   (a) What is the theoretical output impedance $R_{out} = R_D \parallel r_o$?

   (b) If $r_o \gg R_D$, what does the output impedance simplify to?

   (c) Explain why the output impedance affects the voltage gain when a load is connected.

4. **Conceptual understanding:**

   (a) Explain in your own words why the common-source amplifier inverts the signal (provides 180° phase shift).

   (b) Why does removing the source resistor R_S and bypass capacitor C_S simplify the circuit? What trade-offs (if any) are involved?

   (c) In this lab, we use a DC-offset power supply instead of AC coupling capacitors and gate biasing resistors. What are the advantages and disadvantages of this approach?