Bridge Rectifiers with Shunt Voltage Regulation

Lab 3 — ECEN 222: Electronic Circuits II-CE

University of Nebraska–Lincoln
Department of Electrical and Computer Engineering

1 Objectives

The primary objective of this lab is to investigate full-wave rectifier configurations and implement practical voltage regulation using Zener diodes. Upon completion of this lab, students will understand the operational differences between bridge rectifiers, design and implement shunt voltage regulators using Zener diodes, characterize voltage regulation performance under varying load conditions, and analyze load regulation, line regulation, and efficiency of practical power supply circuits. Students will also gain experience with transformer-based power supplies and understand the practical considerations in selecting between different rectifier topologies. Through hands-on measurements and analysis, students will connect theoretical power supply design concepts with real-world regulated power supply implementation.

2 Pre-Lab Preparation

Before arriving at the lab session, students are required to thoroughly prepare by reading the relevant material from the course textbook. Specifically, review Chapter 4 (Diodes) in Sedra & Smith, focusing on sections covering full-wave rectifier circuits and Zener diode shunt regulators. Review the concepts of load regulation (how output voltage changes with load current) and line regulation (how output voltage changes with input voltage variations). Students must also complete the pre-lab questions provided in Section 5 and come prepared with a plan for organizing and recording measurement data during the lab session.

3 Background Theory

3.1 Bridge Rectifier

The bridge rectifier, covered in Lab 2, uses four diodes arranged in a bridge configuration to achieve full-wave rectification without requiring a center-tapped transformer. During the positive half-cycle of the AC input, diodes D_1 and D_2 conduct, directing current through the load in one direction. During the negative half-cycle, diodes D_3 and D_4 conduct, maintaining current flow through the load in the same direction. The key characteristic of the bridge rectifier is that two diodes are always in the conduction path, resulting in a voltage drop of approximately $2V_D \approx 1.4$ V for silicon diodes.

For an ideal bridge rectifier with peak input voltage V_p, the average DC output voltage is:

$$V_{DC} = \frac{2V_p}{\pi} \approx 0.637V_p \tag{1}$$

Accounting for the two diode voltage drops:

$$V_{DC} = \frac{2(V_p - 2V_D)}{\pi} \tag{2}$$

Each diode must withstand a peak inverse voltage (PIV) equal to the peak input voltage:

$$\text{PIV}_{\text{bridge}} = V_p \tag{3}$$

The advantages of the bridge rectifier include having no requirement for a center-tapped transformer (reducing transformer cost and size) and a full utilization of the transformer secondary winding (current flows through the entire winding during both half-cycles). The disadvantages include a higher voltage drop due to two diodes in series (reducing efficiency, especially at low voltages) and the requirement of four diodes instead of two.

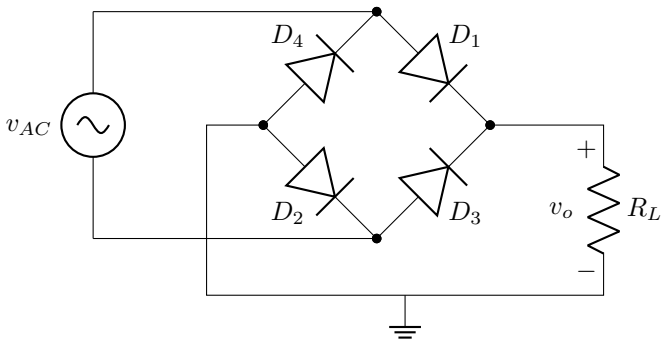

Figure 1: Full-wave bridge rectifier circuit without filter capacitor.

3.2 Shunt Voltage Regulation with Zener Diodes

Simple filtered rectifier circuits, studied in Lab 2, produce a DC output voltage that varies with both input voltage changes (line variations) and load current changes (load variations). However, many electronic circuits require a stable, regulated voltage that remains constant over time. The simplest form of voltage regulation uses a Zener diode in a shunt (parallel) configuration.

A basic Zener shunt regulator consists of a series resistor R_S (often called the dropping resistor or series resistor) connected between the unregulated DC input voltage V_{in} and the load. A zener diode is connected in parallel with the load, as shown in Figure 2. The zener diode is reverse-biased and operates in its breakdown region, maintaining an approximately constant voltage V_Z across the load.

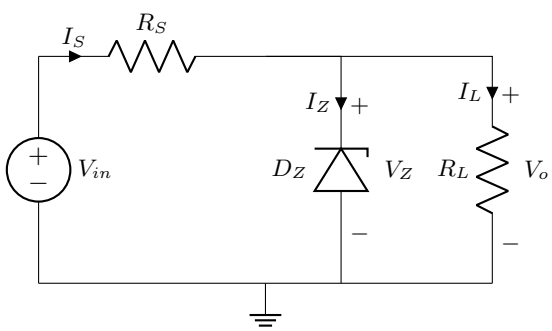

Figure 2: Basic Zener shunt voltage regulator circuit.

The operation principle is straightforward. The series resistor R_S drops the difference between the input voltage and the desired output voltage. The Zener diode maintains a constant voltage V_Z across the load by

absorbing variations in current. When the load current decreases, the Zener current increases to maintain a constant current through R_S (and thus a constant voltage drop across R_S). When the load current increases, the Zener current decreases. Similarly, when the input voltage increases, the Zener current increases to absorb the extra current, while maintaining constant output voltage.

By Kirchhoff's current law:

$$I_S = I_Z + I_L \tag{4}$$

where I_S is the current through the series resistor, I_Z is the Zener current, and I_L is the load current.

The voltage across the series resistor is:

$$V_{R_S} = V_{in} - V_Z \tag{5}$$

Therefore, the current through the series resistor is:

$$I_S = \frac{V_{in} - V_Z}{R_S} \tag{6}$$

For proper regulation, the Zener diode must remain in breakdown, which requires:

$$I_Z \geq I_{Z,\min} \tag{7}$$

where $I_{Z,\min}$ is the minimum Zener current required to maintain breakdown (specified in the datasheet). This condition must be satisfied under all operating conditions, particularly at maximum load current.

The maximum Zener current occurs at minimum load (no load, or $I_L = 0$):

$$I_{Z,\max} = I_S = \frac{V_{in} - V_Z}{R_S} \tag{8}$$

The power dissipated in the Zener diode is:

$$P_Z = V_Z \cdot I_Z \tag{9}$$

This must not exceed the Zener's power rating under any operating condition (specified in the datasheet).

3.3 Design of Zener Shunt Regulators

Designing a Zener shunt regulator involves selecting appropriate values for R_S and the Zener diode rating. The design process typically follows these steps:

1. Select a Zener diode with voltage rating V_Z equal to the desired output voltage.
2. Determine the range of input voltage $V_{in,\min}$ to $V_{in,\max}$ and load current $I_{L,\min}$ to $I_{L,\max}$.
3. Calculate the required series resistance to maintain adequate Zener current under worst-case conditions (maximum load current and minimum input voltage).
4. Verify that the Zener power dissipation does not exceed its rating under worst-case conditions (minimum load current and maximum input voltage).

A common design approach is to choose R_S such that the current through it (when the load is disconnected) is approximately twice the maximum expected load current. This ensures that adequate current flows through the Zener to maintain regulation even when the full load is connected.

3.4 Regulation Performance Metrics

The performance of a voltage regulator is characterized by several metrics:

Load Regulation: This measures how much the output voltage changes as the load current varies from no-load to full-load, with constant input voltage:

$$\text{Load Regulation} = \frac{V_{o,\text{no-load}} - V_{o,\text{full-load}}}{V_{o,\text{full-load}}} \times 100\% \tag{10}$$

Ideally, load regulation should be 0% (no change in output voltage with load).

Line Regulation: This measures how much the output voltage changes as the input voltage varies over its specified range, with constant load:

$$\text{Line Regulation} = \frac{\Delta V_o}{\Delta V_{in}} \times 100\% \tag{11}$$

or sometimes expressed as the absolute change in output voltage per unit change in input voltage.

Efficiency: This is the ratio of power delivered to the load to the total power drawn from the input:

$$\eta = \frac{P_o}{P_{in}} = \frac{V_o I_L}{V_{in} I_S} \times 100\% \tag{12}$$

Zener shunt regulators generally have poor efficiency, especially under light load conditions, because significant power is dissipated in both the series resistor and the Zener diode.

4 Experimental Procedures

4.1 Part 1: Bridge Rectifier with Filter

Observe the behavior of a bridge rectifier with a filtered output

Begin by constructing a full-wave bridge rectifier with filter capacitor as shown in Figure 3. This circuit should be familiar from Lab 2. Use four rectifier diodes in the bridge configuration, the 10 μF filter capacitor, and initially use a 1 kΩ load resistor. Connect the waveform generator to provide 5 V RMS at 60 Hz. The voltage limit setting of the instrument may have to be adjusted. Make sure set the output impedance setting is specified as *HiZ*. Verify the polarity of the electrolytic capacitor before applying power.

Using the oscilloscope, observe the output voltage V_o across R_L. As in lab 2, the output voltage must be measured using two probes and finding the differece by the Math function. Measure the DC output voltage and the output ripple voltage, V_r. Verify that the ripple frequency of the output is 120Hz (twice the AC input frequency). Also measure the AC input voltage amplitude.

Replace the load resistor with a 10 kΩ resistor and repeat the measurements. Then use the 100 kΩ resistor and repeat once more. A larger resistance draws less load current.

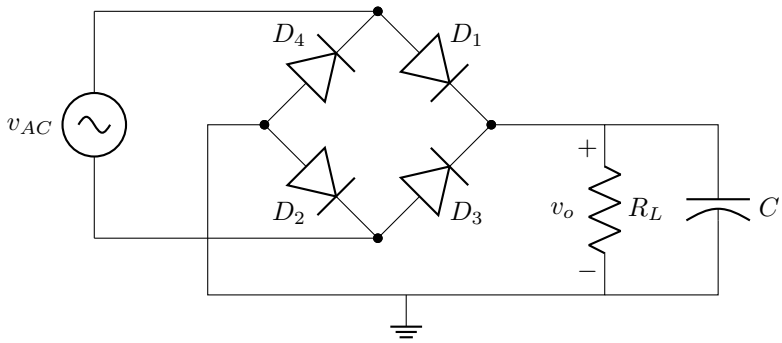

Figure 3: Full-wave bridge rectifier with filter capacitor.

Don't disassemble the circuit as it will be used in part 3!

Report

1. Present oscilloscope waveforms for at least one load condition, showing the ripple voltage clearly.
2. Create a table or plot showing how DC output voltage and ripple voltage vary with load resistance.
3. Explain why the output voltage decreases and ripple increases with heavier loading (smaller resistance). This unregulated bridge rectifier will serve as the baseline for comparison with the regulated version which will be built later.

4.2 Part 2: Design of Zener Shunt Regulator

Design a Zener shunt regulator to provide a stable output voltage from the bridge rectifier circuit

First, determine the characteristics of the Zener diode. (The 1N5225 3V zener diode is provided in the lab) In the datasheet, find the Zener voltage V_Z, minimum Zener current $I_{Z,\min}$, and maximum power rating $P_{Z,\max}$.

From Part 1, the the DC output voltage of the bridge rectifier was measured under different load conditions. This will serve as the input voltage V_{in} to the regulator. The regulator will be designed to supply load currents from 0 mA (no load) up to 20 mA (full load) while maintaining regulation.

Calculate the required series resistance R_S using the following design approach:

1. Choose a design current through the series resistor. A common choice is to make this current equal to approximately 1.5 to 2 times the maximum load current. For $I_{L,\max} = 20$ mA, choose $I_S \approx 40$ mA.
2. Calculate the series resistance:
$$R_S = \frac{V_{in} - V_Z}{I_S} \tag{13}$$
where V_{in} is the measured DC output from the bridge rectifier (use the value measured with 1 kΩ load).
3. Verify that the Zener power dissipation at no load does not exceed the rating:
$$P_{Z,\text{no-load}} = V_Z \cdot I_S \tag{14}$$
This should be less than $P_{Z,\max}$.

4. Verify that the Zener current at full load is sufficient to maintain breakdown:

$$I_{Z,\text{full-load}} = I_S - I_{L,\max} \tag{15}$$

This should be greater than $I_{Z,\min}$.

Report

1. Show all design calculations in the lab report. If the calculated R_S value does not correspond to an available resistor, select the closest value and recalculate the actual currents and power dissipations.

4.3 Part 3: Implementation and Testing of Shunt Regulator

Testing the Zener shunt regulator

Construct the complete regulated power supply by adding the Zener shunt regulator to the bridge rectifier from Part 1. The circuit should include the AC source, bridge rectifier, 100 μF filter capacitor, series resistor R_S (the value calculated in Part 4), Zener diode, and provision for connecting different load resistors as shown in Figure 4.

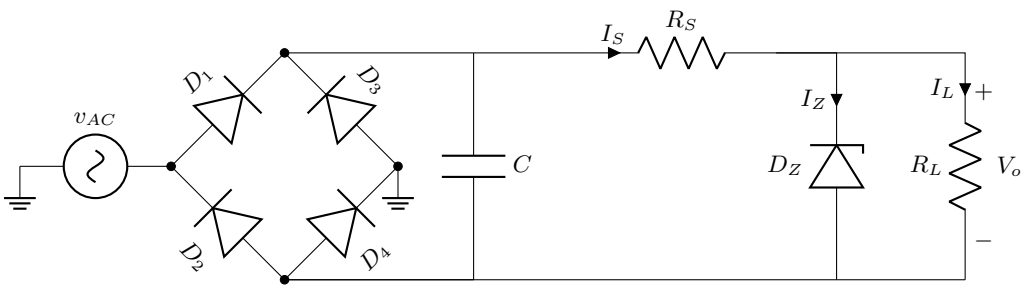

Figure 4: Complete regulated power supply: bridge rectifier with filter capacitor feeding a Zener shunt regulator.

Pay careful attention to the polarity of the Zener diode—the cathode should be connected to the positive terminal (toward R_S) and the anode to ground. The Zener must be reverse-biased to operate in breakdown.

First, test the circuit with no load connected (remove R_L or set it to a very high value). Measure the output voltage V_o using the DMM. This should be approximately equal to the Zener voltage V_Z. Measure the current through the series resistor by measuring the voltage across it and calculating $I_S = V_{R_S}/R_S$. Since there is no load, this current is entirely flowing through the Zener diode: $I_Z = I_S$. Verify that the Zener is not overheating—calculate $P_Z = V_Z \cdot I_Z$ and ensure it is within the power rating.

Now connect a 10 kΩ load resistor and measure the output voltage. Calculate the load current as $I_L = V_o/R_L$. The output voltage should remain very close to the no-load value, demonstrating voltage regulation. Replace the load with progressively smaller resistances (between 10kΩ and 100Ω), measuring the output voltage at each value. For each load condition, also measure the voltage across the series resistor to calculate I_S, and calculate the Zener current as $I_Z = I_S - I_L$.

Continue decreasing the load resistance until one of the following occurs: (1) the output voltage begins to drop significantly, indicating loss of regulation, or (2) The minimum safe load resistance is reached, based on component ratings. Loss of regulation occurs when the Zener current becomes too small to maintain breakdown ($I_Z < I_{Z,\min}$). In all, collect measurements for at least 5 different resistances.

Report

1. Construct a table showing the output voltage, load current, series current, Zener current, and Zener power dissipation for each load resistance value tested. Excel will be helpful here.
2. Describe observations about the output voltage as load current increases. At what load current does regulation begin to fail? Explain this in terms of Zener current.
3. Calculate the Zener current for each load condition and verify that regulation is maintained as long as $I_Z \geq I_{Z,\min}$.

4.4 Part 4: Efficiency Analysis

Efficiency Analysis of the Zener shunt regulator

Calculate the efficiency of the regulated power supply under several different load conditions. For each load resistance value from Part 3 where regulation was maintained, calculate:

1. Output power: $P_o = V_o \cdot I_L = V_o^2/R_L$
2. Input power: $P_{in} = V_{in} \cdot I_S$, where V_{in} is the unregulated DC voltage from the filter capacitor
3. Efficiency: $\eta = (P_o/P_{in}) \times 100\%$

Also calculate the power dissipated in each component:

- Series resistor: $P_{R_S} = I_S^2 \cdot R_S$
- Zener diode: $P_Z = V_Z \cdot I_Z$
- Load: $P_L = V_o \cdot I_L$ (P_o)

Verify that power is conserved: $P_{in} = P_{R_S} + P_Z + P_L$.

Report

1. Create a table showing the power dissipations and efficiency for each load condition. Plot efficiency versus load current.
2. Describe qualitatively how efficiency varies with load. Explain why efficiency is poor at light loads (the Zener dissipates most of the power) and improves at heavier loads (more power goes to the load, less to the Zener).
3. Discuss the fundamental limitation of shunt regulators. They can never achieve high efficiency because they waste power in the series resistor and Zener diode. This motivates the development of more sophisticated regulators (series regulators and switching regulators).

5 Pre-Lab Questions

Complete these questions before coming to the lab session. Include answers and all supporting work in the lab report.

1. A bridge rectifier operates from a 12 V RMS AC source. Calculate (a) the peak input voltage, (b) the peak output voltage accounting for diode drops ($V_D = 0.7$ V), (c) the average DC output voltage, and (d) the PIV each diode must withstand. Show all work.
2. A Zener shunt regulator has $V_{in} = 15$ V (DC), $V_Z = 5.1$ V, $R_S = 220\ \Omega$, and $R_L = 1$ kΩ. Calculate (a) the current through the series resistor I_S, (b) the load current I_L, (c) the Zener current I_Z, (d) the power dissipated in the Zener diode, and (e) the power dissipated in the series resistor. Show all work.