FANUC Series 0*i*-MODEL C
FANUC Series 0*i* Mate-MODEL C

CONNECTION MANUAL (HARDWARE)

B-64113EN/01

- No part of this manual may be reproduced in any form.
- All specifications and designs are subject to change without notice.

The export of this product is subject to the authorization of the government of the country from where the product is exported.

In this manual we have tried as much as possible to describe all the various matters.
However, we cannot describe all the matters which must not be done, or which cannot be done, because there are so many possibilities.
Therefore, matters which are not especially described as possible in this manual should be regarded as ”impossible”.

This manual contains the program names or device names of other companies, some of which are registered trademarks of respective owners. However, these names are not followed by ® or ™ in the main body.

DEFINITION OF WARNING, CAUTION, AND NOTE

This manual includes safety precautions for protecting the user and preventing damage to the machine. Precautions are classified into Warning and Caution according to their bearing on safety. Also, supplementary information is described as a Note. Read the Warning, Caution, and Note thoroughly before attempting to use the machine.

WARNING

Applied when there is a danger of the user being injured or when there is a danger of both the user being injured and the equipment being damaged if the approved procedure is not observed.

CAUTION

Applied when there is a danger of the equipment being damaged, if the approved procedure is not observed.

NOTE

The Note is used to indicate supplementary information other than Warning and Caution.

❍ **Read this manual carefully, and store it in a safe place.**

PREFACE

This manual describes the electrical and structural specifications required for connecting the FANUC Series 0*i*/0*i* Mate CNC control unit to a machine tool. The manual outlines the components commonly used for FANUC CNC control units, as shown in the configuration diagram in Chapter 2, and supplies additional information on using these components with the Series 0*i*/0*i* Mate. Refer to individual manuals for the detailed specifications of each model.

Applicable models

The models covered by this manual, and their abbreviations are:

Product name	Abbreviation	
FANUC Series 0*i*–TC	0*i*–TC	Series 0*i*
FANUC Series 0*i*–MC	0*i*–MC	
FANUC Series 0*i*–PC	0*i*–PC	
FANUC Series 0*i* Mate–TC	0*i* Mate–TC	Series 0*i* Mate
FANUC Series 0*i* Mate–MC	0*i* Mate–MC	

Configuration of the manual

This manual consists of Chapters 1 to 13 and Appendixes.

Chapter title	Description
Chapter 1 CONFIGURATION	Outlines connections for the Series 0*i*/0*i* Mate and guides the reader concerning additional details.
Chapter 2 TOTAL CONNECTION DIAGRAM	This chapter shows the total connection diagram.
Chapter 3 INSTALLATION	This chapter describes the installation conditions for the Series 0*i*/0*i* Mate. 1) Required power supply 2) Heat generated 3) Connector arrangement on the control unit 4) Noise prevention
Chapter 4 CONNECTING THE POWER SUPPLY	This chapter describes how to connect the power supply.
Chapter 5 CONNECTING PERIPHERAL UNITS	This chapter describes how to connect the following peripheral devices: 1) MDI units 2) I/O devices (via RS232C) 3) Manual pulse generators
Chapter 6 CONNECTING THE SPINDLE UNIT	This chapter describes how to connect the spindle servo unit, the spindle motor.
Chapter 7 SERVO INTERFACE	This chapter describes how to connect the servo unit and the servo unit.
Chapter 8 CONNECTION TO FANUC I/O Link	This chapter describes the use of FANUC I/O Link to expand the machine interface I/O.
Chapter 9 CONNECTION OF I/O Link SLAVE DEVICES	This chapter describes the addresses and connector pins for signals transferred between the Series 0*i*/0*i* Mate and the machine. Describes the I/O unit for Series 0*i*.
Chapter 10 EMERGENCY STOP SIGNAL	This chapter describes the handling of emergency stop signals. The user must read this chapter before attempting to operate the CNC.
Chapter 11 HIGH–SPEED SERIAL BUS (HSSB)	This chapter describes the high–speed serial bus (HSSB) supported by the Series 0*i*.
Chapter 12 FANUC DNC2	This chapter describes connections for the FANUC DNC2.
Chapter 13 OTHER NETWORK CONNECTION	This chapter lists manuals related to the Ethernet, DeviceNet, and other networks
Appendix	A External dimensions of unit B 20–pin interface connectors and cables C Connection cable (Supplied from US) D Optical fiber cable E Liquid crystal display (LCD) F Memory card interface G Procedure for fixing the memory card

Related manuals of Series 0*i*–C/0*i* Mate–C

The following table lists the manuals related to Series 0*i*–C, Series 0*i* Mate–C.
This manual is indicated by an asterisk(*).

Manual name	Specification number	
FANUC Series 0*i*–MODEL C/0*i* Mate–MODEL C DESCRIPTIONS	B–64112EN	
FANUC Series 0*i*–MODEL C/0*i* Mate–MODEL C CONNECTION MANUAL (HARDWARE)	B–64113EN	*
FANUC Series 0*i*–MODEL C/0*i* Mate–MODEL C CONNECTION MANUAL (FUNCTION)	B–64113EN–1	
FANUC Series 0*i*–PC CONNECTION MANUAL (FUNCTION)	B–64153EN	
FANUC Series 0*i*–TC OPERATOR'S MANUAL	B–64114EN	
FANUC Series 0*i*–MC OPERATOR'S MANUAL	B–64124EN	
FANUC Series 0*i* Mate–TC OPERATOR'S MANUAL	B–64134EN	
FANUC Series 0*i* Mate–MC OPERATOR'S MANUAL	B–64144EN	
FANUC Series 0*i*–PC OPERATOR'S MANUAL	B–64154EN	
FANUC Series 0*i*–MODEL C/0*i* Mate–MODEL C MAINTENANCE MANUAL	B–64115EN	
FANUC Series 0*i*–MODEL C/0*i* Mate–MODEL C PARAMETER MANUAL	B–64120EN	
FANUC Series 0*i*–PC PARAMETER MANUAL	B–64160EN	
PROGRAMMING MANUAL		
Macro Compiler/Macro Executor PROGRAMMING MANUAL	B–61803E–1	
FANUC MACRO COMPILER (For Personal Computer) PROGRAMMING MANUAL	B–66102E	
PMC		
PMC Ladder Language PROGRAMMING MANUAL	B–61863E	
PMC C Language PROGRAMMING MANUA	B–61863E–1	
Network		
PROFIBUS–DP Board OPERATOR'S MANUAL	B–62924EN	
Ethernet Board/DATA SERVER Board OPERATOR'S MANUAL	B–63354EN	
AST Ethernet Board/FAST DATA SERVER OPERATOR'S MANUAL	B–63644EN	
DeviceNet Board OPERATOR'S MANUAL	B–63404EN	

Manual name	Specification number	
OPEN CNC		
FANUC OPEN CNC OPERATOR'S MANUAL Basic Operation Package 1 (For Windows 95/NT)	B–62994EN	
FANUC OPEN CNC OPERATOR'S MANUAL (DNC Operation Management Package)	B–63214EN	

Related manuals of SERVO MOTOR αis/αi/βis series

The following table lists the manuals related to SERVO MOTOR αis/αi/βis series

Manual name	Specification number
FANUC AC SERVO MOTOR αis/αi series DESCRIPTIONS	B–65262EN
FANUC AC SERVO MOTOR βis series DESCRIPTIONS	B–65302EN
FANUC AC SERVO MOTOR αis/αi/βis series PARAMETER MANUAL	B–65270EN
FANUC AC SPINDLE MOTOR αi series DESCRIPTIONS	B–65272EN
FANUC AC SPINDLE MOTOR βis series DESCRIPTIONS	B–65312EN
FANUC AC SPINDLE MOTOR αi/βi series PARAMETER MANUAL	B–65270EN
FANUC SERVO AMPLIFIER αi series DESCRIPTIONS	B–65282EN
FANUC SERVO AMPLIFIER βi series DESCRIPTIONS	B–65322EN
FANUC AC SERVO MOTOR αis/αi series FANUC AC SPINDLE MOTOR αi series FANUC SERVO AMPLIFIER αi series MAINTENANCE MANUAL	B–65285EN
FANUC AC SERVO MOTOR βis series FANUC AC SPINDLE MOTOR βi series FANUC SERVO AMPLIFIER βi series MAINTENANCE MANUAL	B–65325EN

Table of Contents

DEFINITION OF WARNING, CAUTION, AND NOTE s–1

PREFACE p–1

1. CONFIGURATION 1

1.1 CONTROL UNIT CONFIGURATION AND COMPONENT NAMES 2

1.1.1 Configurations of Control Units 2

1.2 HARDWARE OVERVIEW 7

2. TOTAL CONNECTION DIAGRAMS 9

3. INSTALLATION 13

3.1 ENVIRONMENT FOR INSTALLATION 14

3.1.1 Environmental Requirements Outside the Control Unit 14

3.2 POWER SUPPLY CAPACITY 15

3.2.1 Power Supply Capacities of CNC–related Units 15

3.3 DESIGN AND INSTALLATION CONDITIONS OF THE MACHINE TOOL MAGNETIC CABINET 16

3.4 THERMAL DESIGN OF THE CABINET 18

3.4.1 Temperature Rise within the Cabinet 18

3.4.2 Cooling by Heat Exchanger 18

3.4.3 Heat Output of Each Unit 19

3.4.4 Thermal Design of Operator’s Panel 20

3.5 ACTION AGAINST NOISE 22

3.5.1 Separating Signal Lines 22

3.5.2 Ground 24

3.5.3 Connecting the Ground Terminal of the Control Unit 25

3.5.4 Noise Suppressor 26

3.5.5 Cable Clamp and Shield Processing 27

3.5.6 Measures Against Surges due to Lightning 30

3.6 CONTROL UNIT 32

3.6.1 Installation of the Control Unit 32

3.7 CABLING DIAGRAM 35

3.8 DUSTPROOF MEASURES FOR CABINETS AND PENDANT BOXES 35

4. POWER SUPPLY CONNECTION 36

4.1 GENERAL 37

4.2 TURNING ON AND OFF THE POWER TO THE CONTROL UNIT 38

4.2.1 Power Supply for the Control Unit 38

4.2.2 External 24 VDC Power Supply and Circuit Configurations 39

4.2.3 Procedure for Turning On the Power 43

4.2.4 Procedure for Turning Off the Power 44

4.3 CABLE FOR POWER SUPPLY TO CONTROL UNIT 45

4.4 BATTERIES 46

4.4.1 Battery for Memory Backup (3VDC) 46

4.4.2 Battery for Separate Absolute Pulse Coders (6VDC) 50

4.4.3 Battery for Absolute Pulse Coder Built into the Motor (6VDC) 51

5. CONNECTION TO CNC PERIPHERALS 52

5.1 CONNECTION OF MDI UNIT 53
5.1.1 General 53
5.1.2 Key Layout of Separate–type MDI 53
5.2 CONNECTION WITH INPUT/OUTPUT DEVICES 56
5.2.1 Overview 56
5.2.2 Connecting I/O Devices 57
5.2.3 RS–232–C Serial Port 58
5.2.4 RS–232–C Interface Specification 60
5.2.5 FANUC Handy File Connection 69
5.3 CONNECTING THE HIGH–SPEED SKIP (HDI) 70
5.3.1 General 70
5.3.2 Connection to the High–speed Skip (HDI) 71
5.3.3 Input Signal Rules for the High–speed Skip (HDI) 72

6. SPINDLE CONNECTION 73

6.1 SERIAL SPINDLE 74
6.1.1 Connection of One to Two Serial Spindles 74
6.2 ANALOG SPINDLE INTERFACE 76
6.3 POSITION CODER INTERFACE 77

7. SERVO INTERFACE 78

7.1 CONNECTION TO THE SERVO AMPLIFIERS 79
7.1.1 General 80
7.1.2 Interface to the Servo Amplifiers 80
7.1.3 Separate Detector Interface 81
7.1.4 Separate Detector Interface Unit Specification 83
7.1.5 Connection of Power Supply 83
7.1.6 Linear Scale Interface (Parallel Interface) 84
7.1.7 Separate Type Pulse Coder Interface (Parallel Interface) 85
7.1.8 Input Signal Requirements (Parallel Interface) 89
7.1.9 Connection of Battery for Separate Absolute Detector 91
7.1.10 Connector Locations 93
7.1.11 Installation 94
7.1.12 Notes on Installing a Separate Detector Interface Unit 95

8. CONNECTION TO FANUC I/O Link 97

8.1 GENERAL 98
8.2 CONNECTION 99
8.2.1 Connection of FANUC I/O Link by Electric Cable 104
8.2.2 Power Supply Precautions 104

9. CONNECTION OF I/O Link SLAVE DEVICES 105

9.1 CONNECTION OF I/O UNITS FOR 0*i* 106
9.1.1 General 106
9.1.2 Cautions 108
9.1.3 Cable for Power Supply to Control Unit 108
9.1.4 Connector Pin Arrangement 110
9.1.5 Connecting DI/DO 111
9.1.6 I/O Signal Requirements and External Power Supply for DO 121
9.1.7 Connecting the Manual Pulse Generator 125

9.2 CONNECTION TO MACHINE OPERATOR'S PANEL 129
9.2.1 Overview 129
9.2.2 Total Connection Diagram 130
9.2.3 Connections 131
9.2.3.1 Pin assignment 131
9.2.3.2 Power supply connection 133
9.2.3.3 I/O link connection 134
9.2.3.4 Emergency stop signal connection 135
9.2.3.5 Power ON/OFF control signal connection 135
9.2.3.6 General–purpose DI connection 136
9.2.3.7 General–purpose DO signal 138
9.2.3.8 Manual pulse generator connection 139
9.2.3.9 When a pendant–type manual pulse generator 140
9.2.3.10 Connector (on the cable side) specifications 141
9.2.4 I/O Address 142
9.2.4.1 Keyboard of main panel 142
9.2.4.2 Override signals 143
9.2.5 I/O Mapping 144
9.2.6 Connector Locations of Main Panel B 144
9.2.7 Specifications 145
9.2.7.1 Environmental requirement 145
9.2.7.2 Order specification 145
9.2.7.3 Main panel B, B1 specification 146
9.2.7.4 Sub panel A, B1 specification 146
9.2.7.5 Power supply specification 146
9.2.7.6 General–purpose DI signal definition 147
9.2.7.7 General–purpose DO signal definition 147
9.2.8 Key Symbol Indication on Machine Operator's Panel 148
9.2.8.1 Meaning of key symbols 148
9.2.8.2 Detachable key top 150
9.2.9 Others 151
9.3 CONNECTION TO THE SMALL MACHINE OPERATOR'S PANEL 154
9.3.1 Overview 154
9.3.2 Overall Connection Diagram 154
9.3.3 Connection of Each Section 155
9.3.3.1 Power connection 155
9.3.3.2 Emergency stop switch 156
9.3.3.3 I/O Link connection 156
9.3.3.4 Manual pulse generator connection 157
9.3.4 DI Signal Connection (Rotary Switch Connection) 160
9.3.5 I/O Address 161
9.3.5.1 Keyboard of the operator's panel 161
9.3.5.2 Override signals 162
9.3.6 I/O Address Allocation 163
9.3.7 External Dimensions 163
9.3.7.1 Outline drawing and panel–cut drawing of the small machine operator's panel 164
9.3.7.2 Layout of the key sheet 165
9.3.8 Connector Layout of the Small Machine Operator's Panel 167
9.3.9 Specifications 168
9.3.9.1 Environmental requirement 168

9.3.9.2 Order specification 168
9.3.9.3 Operator's panel specification 168
9.3.9.4 Power supply specification 169
9.3.10 Key Symbol Indication on Machine Operator's Panel 169
9.3.10.1 Meaning of key symbols 169
9.3.10.2 Customization of the key sheet 171
9.3.11 Caution 171
9.3.12 Maintenance Parts 172
9.4 CONNECTION OF CONNECTOR PANEL I/O MODULE 173
9.4.1 Configuration 173
9.4.2 Connection Diagram 174
9.4.3 Module Specifications 175
9.4.4 DI/DO Connector Pin Assignment 177
9.4.5 DI (Input Signal) Connection 178
9.4.6 DO (Output Signal) Connection 180
9.4.7 DI/DO Signal Specifications 181
9.4.8 2A Output Connector Pin Allocation 183
9.4.9 2A DO (Output Signal) Connection 184
9.4.10 2A Output DO Signal Specifications 185
9.4.11 Analog Input Connector Pin Allocation 186
9.4.12 Analog Input Signal Connections 187
9.4.13 Analog Input Signal Specifications 189
9.4.14 Analog Input Specifications 190
9.4.15 Manual Pulse Generator Connection 192
9.4.16 Cable Length for Manual Pulse Generator 193
9.4.17 Connection of Basic and Expansion Modules 194
9.4.18 Module Installation 195
9.4.19 Other Notes 200
9.4.20 Distribution I/O Setting 203
9.5 CONNECTION OF OPERATOR'S PANEL I/O MODULE (FOR MATRIX INPUT) 206
9.5.1 Overall Connection Diagram 206
9.5.2 Power Connection 207
9.5.3 DI/DO Connector Pin Arrangement 208
9.5.4 DI (General–purpose Input Signal) Connection 209
9.5.5 DI (Matrix Input Signal) Connection 211
9.5.6 DO (Output Signal) Connection 212
9.5.7 Manual Pulse Generator Connection 215
9.5.8 External View 216
9.5.9 Specifications 217
9.5.10 Other Notes 220
9.6 CONNECTION OF OPERATOR'S PANEL I/O MODULE AND POWER MAGNETICS CABINET I/O MODULE 224
9.6.1 Overall Connection Diagram 224
9.6.2 Power Connection 226
9.6.3 DI/DO Connector Pin Arrangement 227
9.6.4 DI (General–purpose Input Signal) Connection 228
9.6.5 DO (Output Signal) Connection 232
9.6.6 Manual Pulse Generator Connection 234
9.6.7 External View 234
9.6.8 Specifications 235
9.6.9 Other Notes 237
9.7 CONNECTION OF SOURCE OUTPUT TYPE CONNECTION UNIT 241
9.7.1 Input Signal Specifications for Source Output Type Connection Unit 242
9.7.2 Output Signal Specifications for Source Output Type Connection Unit 243
9.7.3 Connector Pin Layout for Source Output Type Connection Unit 247

9.7.4 Dimensions of Source Output Type Connection Unit 250
9.8 CONNECTING THE FANUC SERVO UNIT β SERIES WITH I/O LINK 251
9.8.1 Overview 251
9.8.2 Connection 252
9.8.3 Maximum Number of Units that can be Connected 253
9.8.4 Address Assignment by Ladder 253

10. EMERGENCY STOP SIGNAL 254

11. HIGH–SPEED SERIAL BUS (HSSB) 257
11.1 OVERVIEW 258
11.2 CAUTIONS 258
11.3 CONNECTION DIAGRAM 259
11.4 PERSONAL COMPUTER SPECIFICATION 260
11.4.1 Specification of Personal Computer in Case that the Interface Board of ISA Type are Used 260
11.4.2 Specification of Personal Computer in Case that the Interface Board of PCI Type are Used 260
11.5 INSTALLATION ENVIRONMENT 261
11.6 PROCEDURE FOR INSTALLING PERSONAL COMPUTER INTERFACE BOARDS 262
11.7 HANDLING PRECAUTIONS 264
11.8 RECOMMENDED CABLES 265

12. FANUC DNC2 INTERFACE 266
12.1 GENERAL 267
12.2 DNC2 INTERFACE (RS–232–C) 268

13. CONNECTION TO OTHER NETWORKS 269

APPENDIX

A. EXTERNAL DIMENSIONS OF EACH UNIT 273

B. 20–PIN INTERFACE CONNECTORS AND CABLES 311
B.1 OVERVIEW 312
B.2 BOARD–MOUNTED CONNECTORS 312
B.3 CABLE CONNECTORS 313
B.4 RECOMMENDED CONNECTORS, APPLICABLE HOUSINGS, AND CABLES 315

C. CONNECTION CABLE (SUPPLIED FROM US) 326

D. OPTICAL FIBER CABLE 329

E. LIQUID CRYSTAL DISPLAY (LCD) 341

F. MEMORY CARD INTERFACE 342

G. PROCEDURE FOR FIXING THE MEMORY CARD 345

1 CONFIGURATION

1.1 CONTROL UNIT CONFIGURATION AND COMPONENT NAMES

The configuration and component names of control units are shown in the figures given below. This manual explains how to attach the connectors shown in these figures to devices. The numbers in parentheses () in the figures are keyed to the item numbers of the descriptions in this manual. The numbers in brackets [] in the figures are connector numbers.

1.1.1 Configurations of Control Units

Control units (A circle in the table denotes that a unit is available.)

Display	MDI	Expan-sion slot	Soft key	0*i*	0*i* Mate
8.4″ TFT color LCD	LCD–mounted type (horizontal)	None	5+2	○	×
		2	5+2	○	×
	LCD–mounted type (vertical)	None	5+2	○	×
		2	5+2	○	×
7.2″ STN monochrome LCD	LCD–mounted type (horizontal)	None	5+2	○	○
		2	5+2	○	×
	LCD–mounted type (vertical)	None	5+2	○	○
		2	5+2	○	×

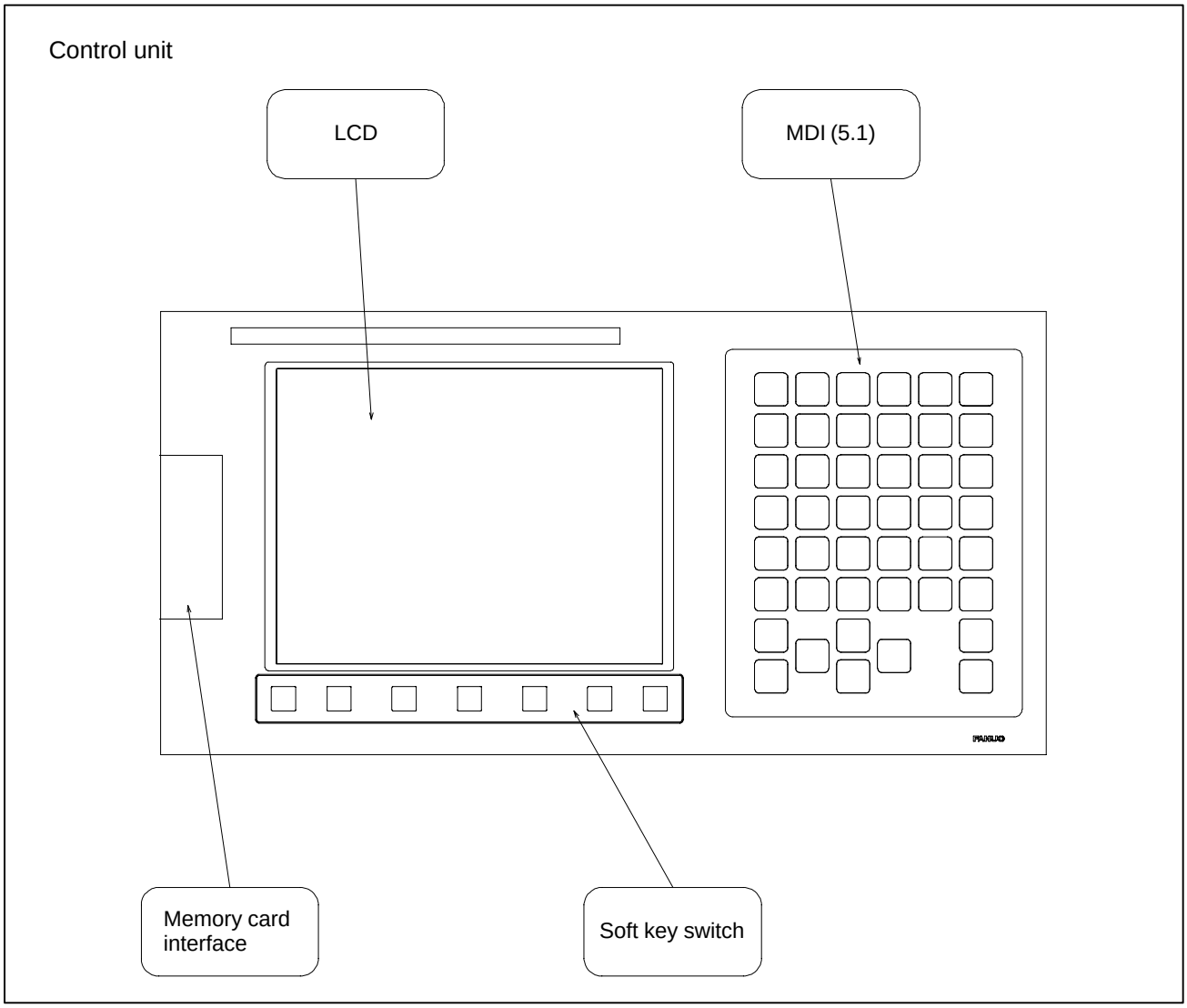

NOTE

This figure is a front view of the control unit with an LCD. The configurations of other control units are basically the same as that shown above.

The numbers in parentheses () in the figures are keyed to the item numbers of the descriptions in this manual.

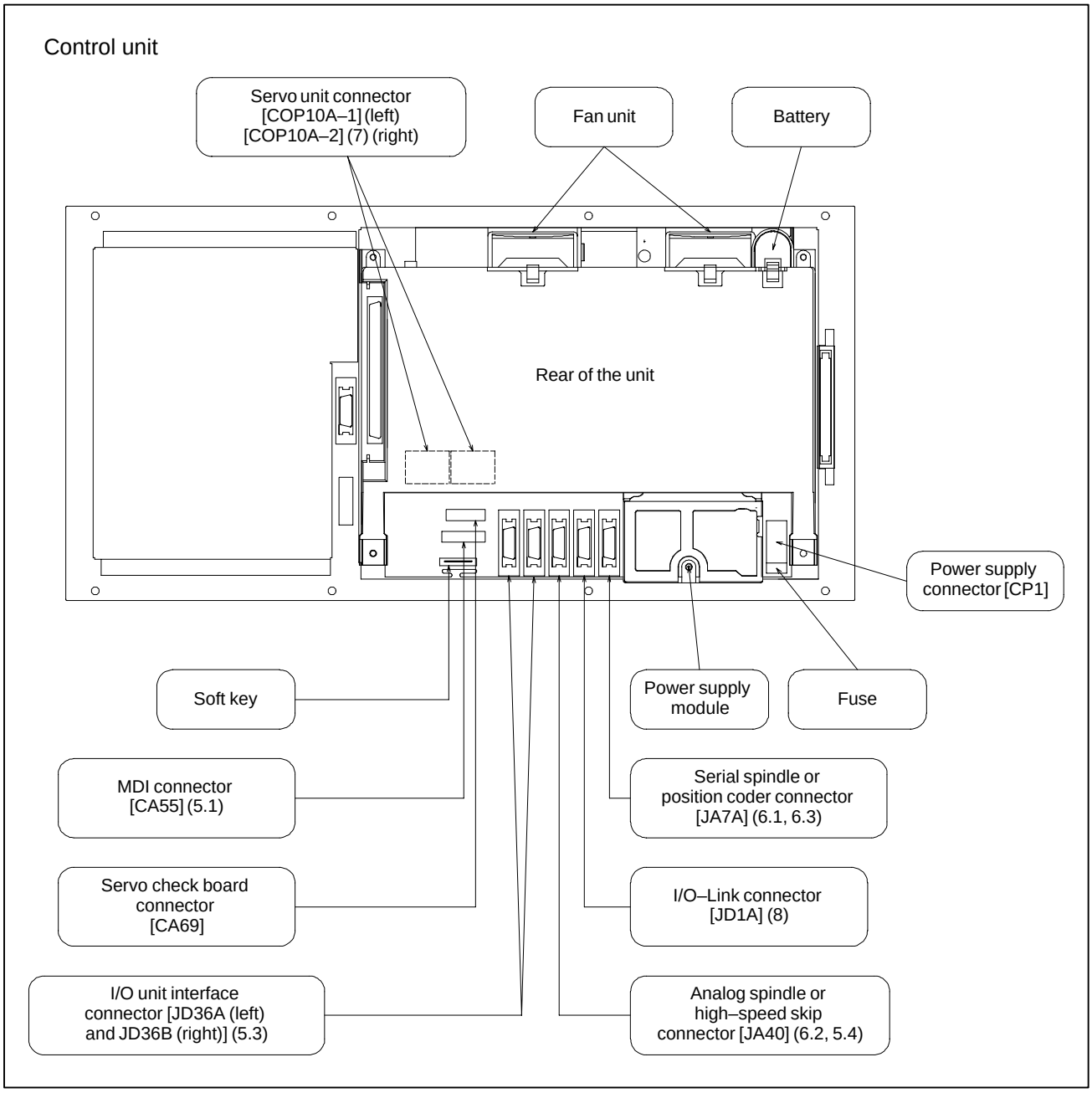

NOTE

This figure is a rear view of the control unit without option slots.
The numbers in brackets [] in the figures are connector numbers.

Control unit

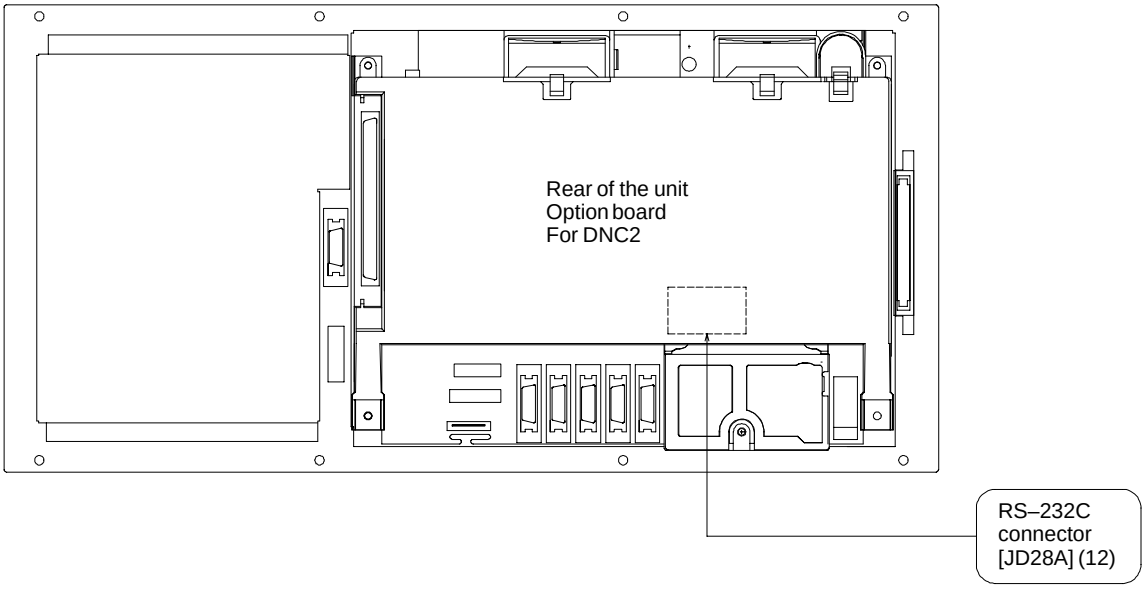

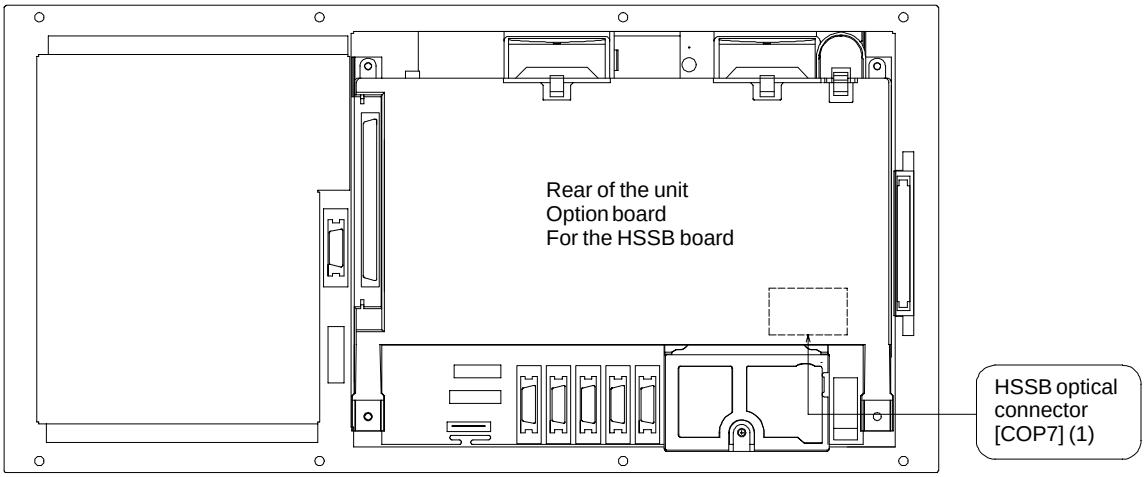

NOTE

1 The above figures are rear views of a control unit with option slots.

2 When an option board related to a network is used, refer to the network connection manual.
The numbers in brackets [] in the figures are connector numbers.

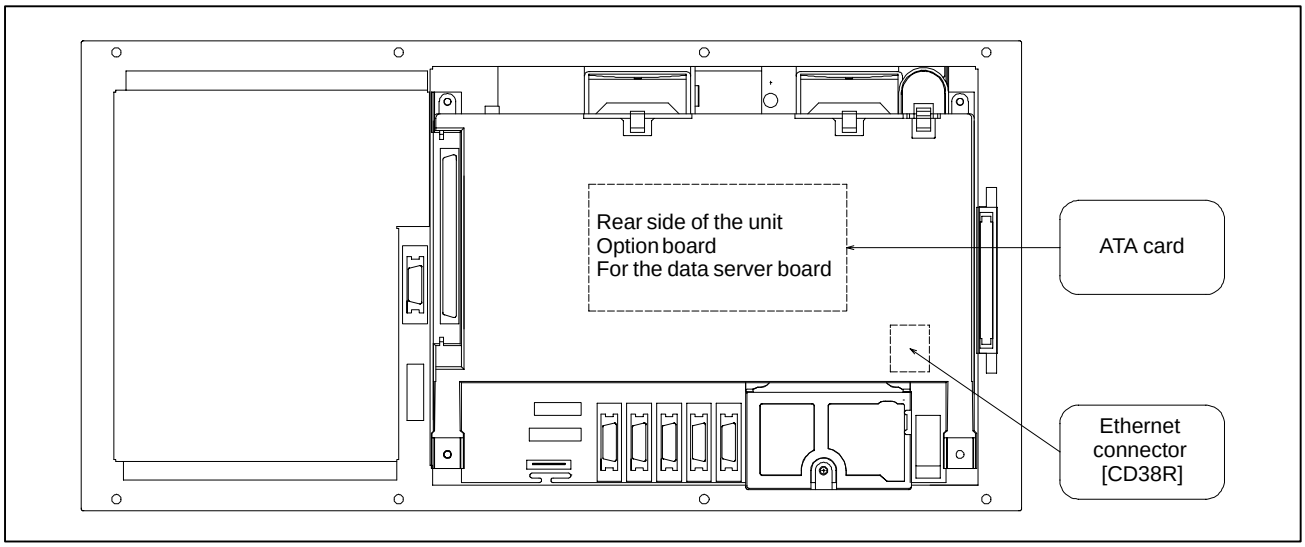

NOTE

The above figures are rear views of a control unit with option slots.

The numbers in parentheses () in the figures are keyed to the item numbers of the descriptions in this manual. The numbers in brackets [] in the figures are connector numbers.

I/O unit for 0*i*

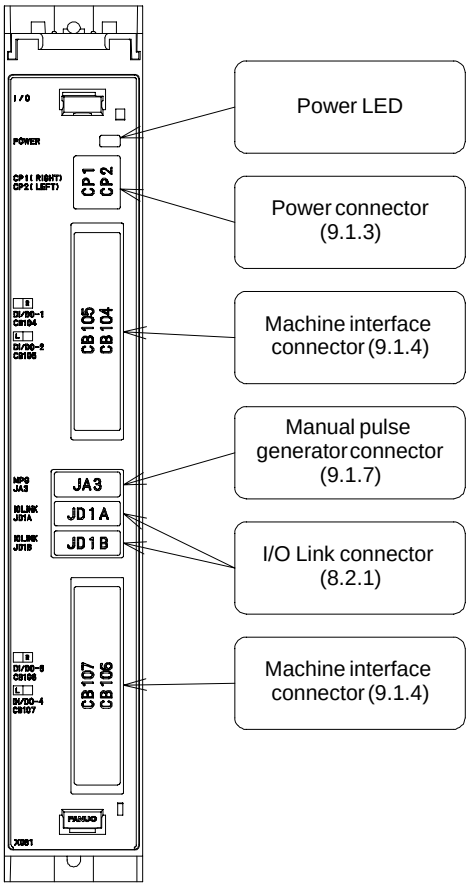

1.2 HARDWARE OVERVIEW

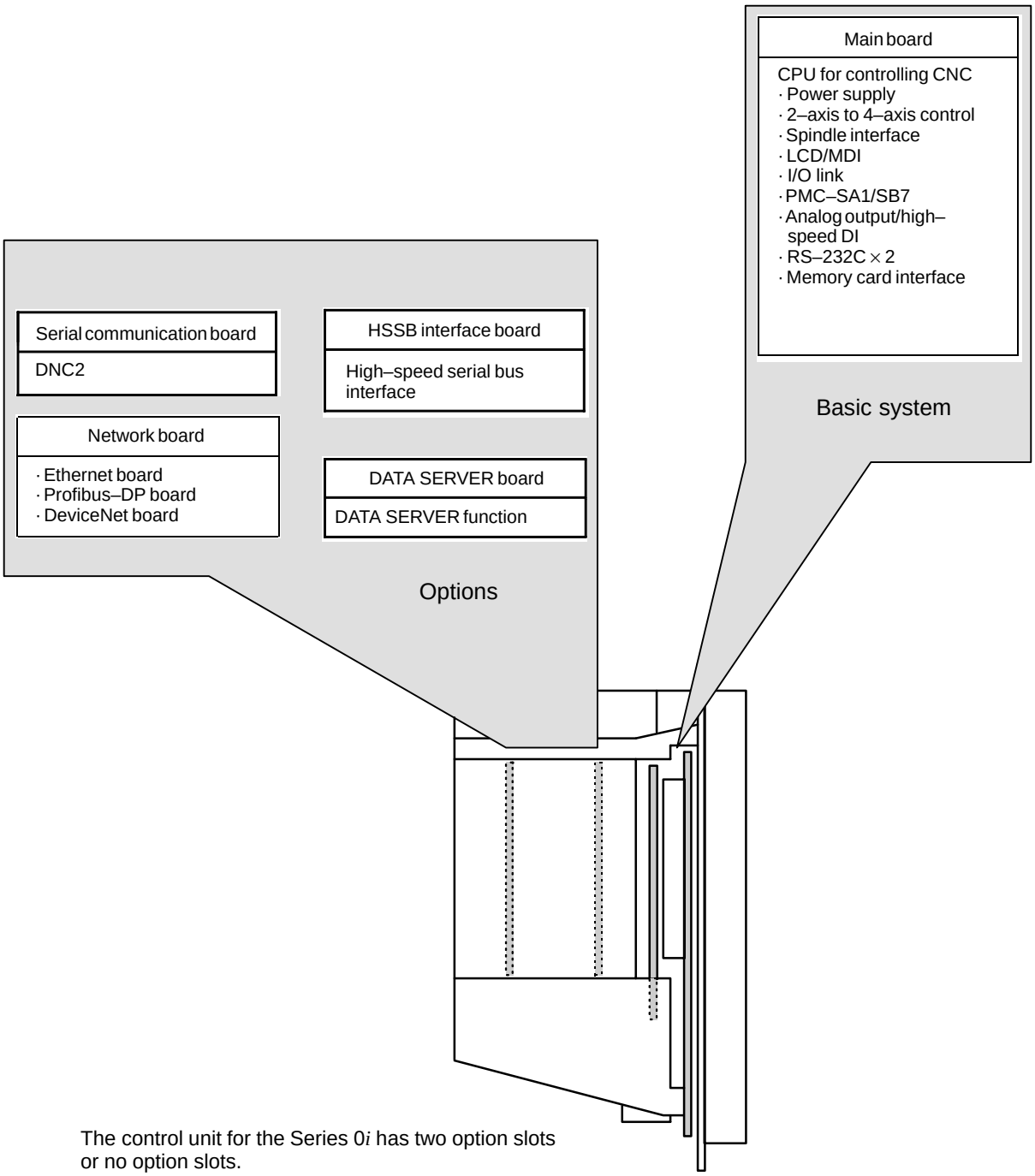

The control unit for the Series 0*i* has two option slots or no option slots.

The control unit for the Series 0*i* Mate has no option slots, so an option board cannot be added. On a unit with option slots, as many option boards as the number of option slots can be mounted. (However, the option board must satisfy the mounting conditions. See the mounting conditions for additional options.)

Fig. 1.2 Configuration of the control unit (Series 0*i*/0*i* Mate)

Conditions for installing options

	Option	Slot nearest to the LCD
Communication	HSSB board PC side HSSB board	
	Serial communication board Main unit – A/B + Communication function – DNC2	
Data server	Data server board (ATA flash card and 100BASE–TX) 10BASE–T is also enabled Ethernet and data server functions	×
Network	Ethernet board (100BASE–TX) 10BASE–T is also enabled Ethernet function + Function – FOCASI/DNC1/FACTOLINK	×
	DeviceNet interface board DeviceNet function + DeviceNet application + Master /slave	
	PROFIBUS board PROFIBUS function + PROFIBUS application + Master /slave	

CAUTION

Each option listed above occupies one option slot. These option slots do not necessarily accept all option types. When selecting option slots, therefore, pay attention to the number of option slots. In this table, the symbol "×" indicates the option slot that does not accept the indicated options. Some combinations of options are unacceptable.

2 TOTAL CONNECTION DIAGRAMS

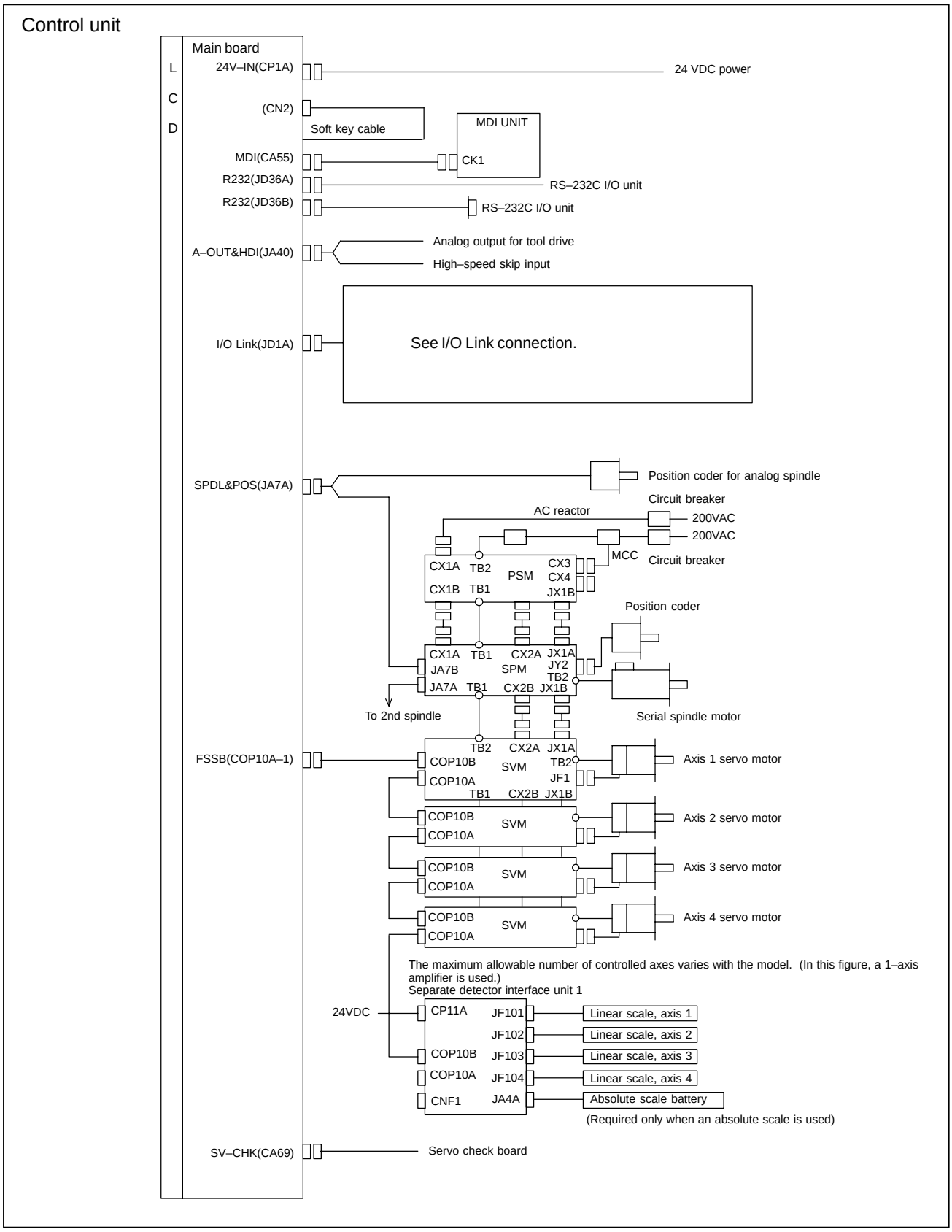
Control unit
Main board
L
C
D
24V–IN(CP1A)
24 VDC power
(CN2)
Soft key cable
MDI UNIT
MDI(CA55)
CK1
R232(JD36A)
RS–232C I/O unit
R232(JD36B)
RS–232C I/O unit
A–OUT&HDI(JA40)
Analog output for tool drive
High–speed skip input
I/O Link(JD1A)
See I/O Link connection.
SPDL&POS(JA7A)
Position coder for analog spindle
Circuit breaker
AC reactor
200VAC
200VAC
MCC
Circuit breaker
CX1A
TB2
PSM
CX3
CX4
CX1B
TB1
JX1B
Position coder
CX1A
TB1
CX2A
JX1A
JY2
JA7B
SPM
TB2
JA7A
TB1
CX2B
JX1B
To 2nd spindle
Serial spindle motor
FSSB(COP10A–1)
TB2
CX2A
JX1A
COP10B
SVM
TB2
COP10A
JF1
TB1
CX2B
JX1B
Axis 1 servo motor
COP10B
SVM
COP10A
Axis 2 servo motor
COP10B
SVM
COP10A
Axis 3 servo motor
COP10B
SVM
COP10A
Axis 4 servo motor
The maximum allowable number of controlled axes varies with the model. (In this figure, a 1–axis amplifier is used.)
Separate detector interface unit 1
24VDC
CP11A
JF101
Linear scale, axis 1
JF102
Linear scale, axis 2
COP10B
JF103
Linear scale, axis 3
COP10A
JF104
Linear scale, axis 4
CNF1
JA4A
Absolute scale battery
(Required only when an absolute scale is used)
SV–CHK(CA69)
Servo check board

Control unit (Only when the Series 0*i* has an option function)

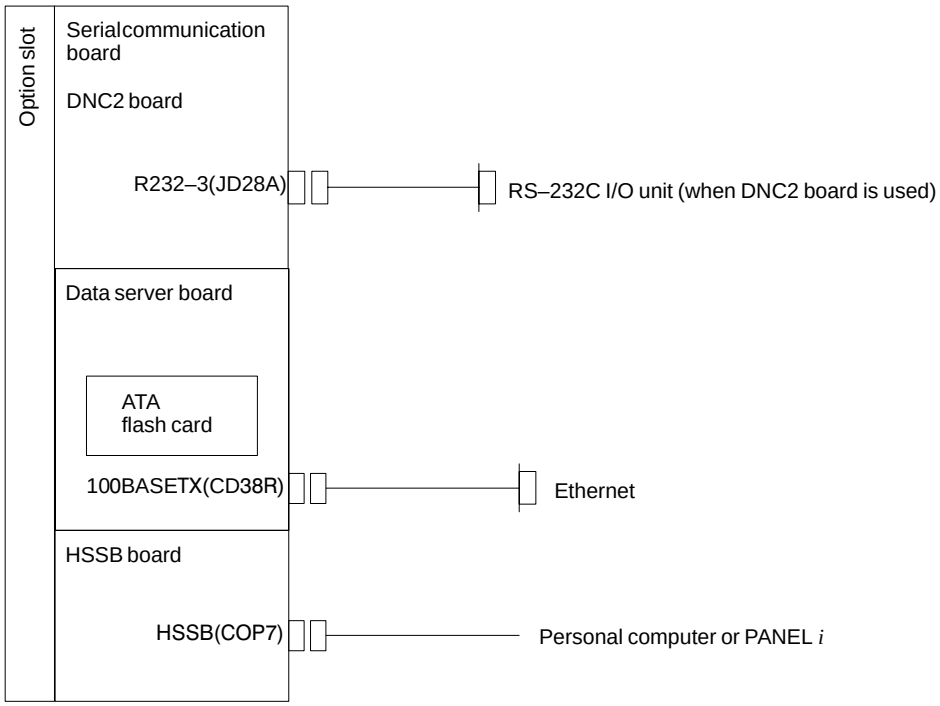

Sample I/O Link connection

– For Series 0*i*

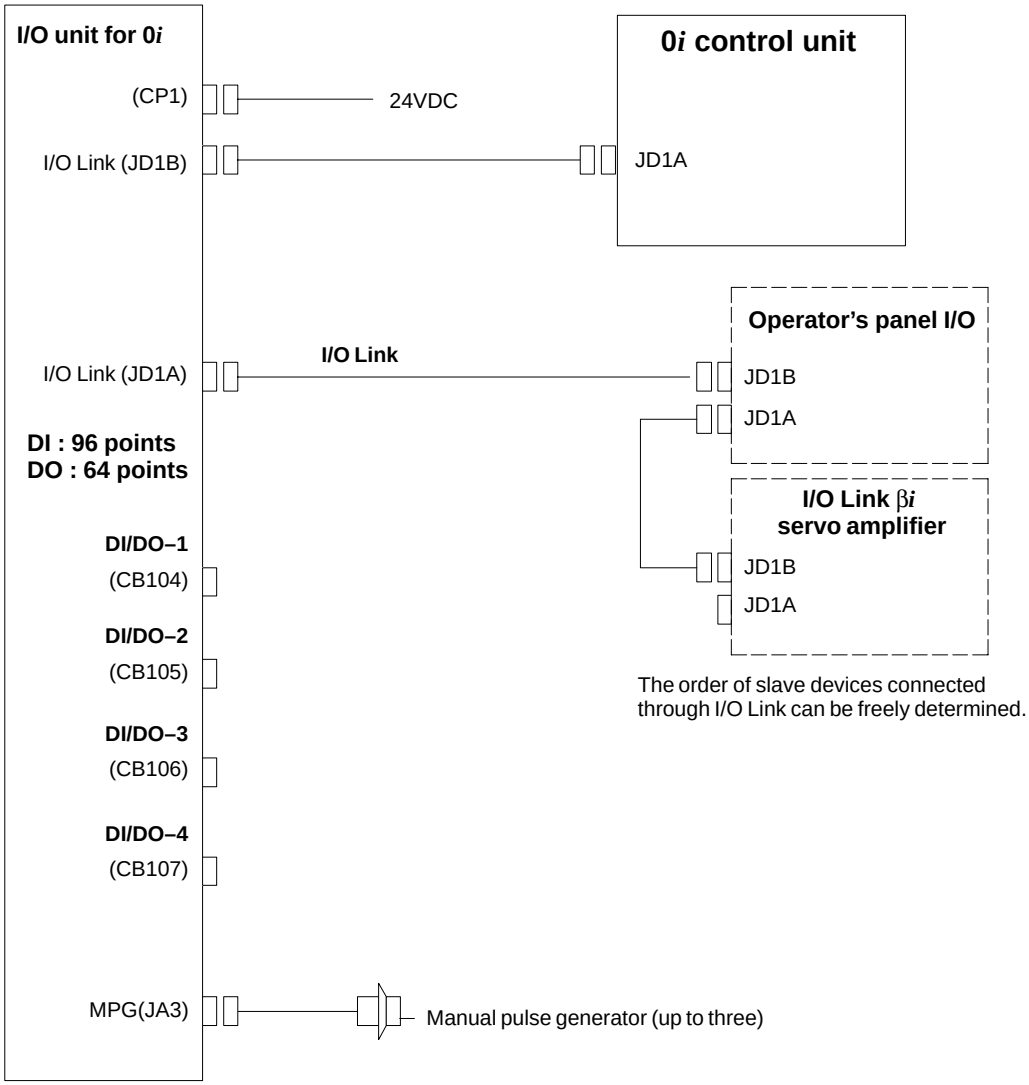

– For Series 0*i* Mate

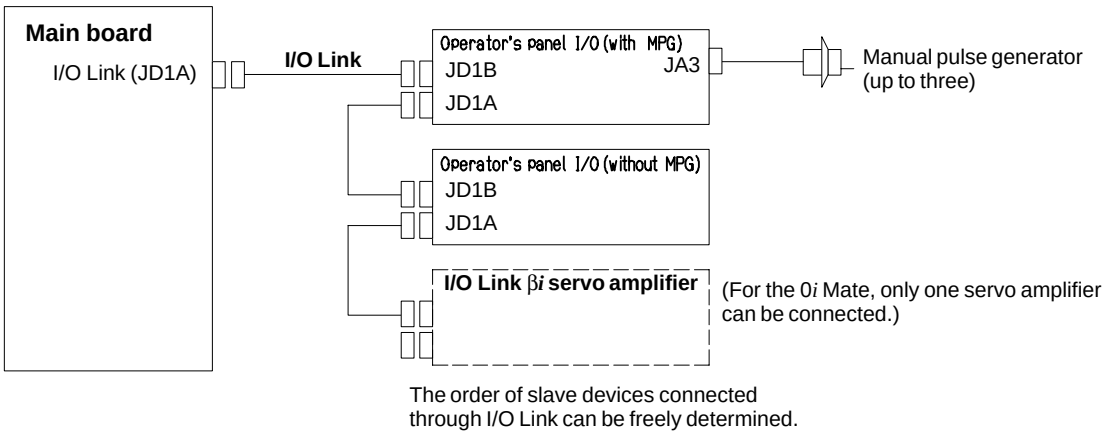

3 INSTALLATION

3.1 ENVIRONMENT FOR INSTALLATION

3.1.1 Environmental Requirements Outside the Control Unit

The peripheral units and the control unit have been designed on the assumption that they are housed in closed cabinets. In this manual "cabinet" refers to the following:

- Cabinet manufactured by the machine tool builder for housing the control unit or peripheral units;
- Operation pendant, manufactured by the machine tool builder, for housing the control unit or operator's panel.
- Equivalent to the above.

The environmental conditions when installing these cabinets shall conform to the following table. Section 3.3 describes the installation and design conditions of a cabinet satisfying these conditions.

	Condition	Control unit
Ambient Temperature	Operating	0°C to 58°C
	Storage, Transport	–20°C to 60°C
Humidity	Normal	75%RH or less, no condensation
	Short period (less than 1 month)	95%RH or less, no condensation
Vibration	Operating	0.5 G or less
	Non–operating	1.0 G or less
Meters above sea level	Operating	Up to 1000 m
	Non–operating	Up to 12000 m
Environment	Normal machine shop environment (The environment must be considered if the cabinets are in a location where the density of dust, coolant, and/or organic solvent is relatively high.)	

3.2 POWER SUPPLY CAPACITY

3.2.1 Power Supply Capacities of CNC–related Units

The following CNC–related units require an input power supply that satisfies the indicated current capacities with a power supply voltage of 24 VDC ±10%. Here, note that momentary voltage changes and ripples are also within ±10% of the power supply voltage.

Table 3.2.1 (a) Power supply capacity

Unit		0*i*	0*i* Mate	Power supply capacity	Remarks
Control unit	Without option slots	○	○	1.5A	(*1)
	With 2 option slots	○	—	1.7A	(*1)
HSSB board		○	○	0.2A	
Serial communication board (DNC2)		○	○	0.3A	
Data server board		○	○	0.5A	

NOTE
1 The liquid–crystal display and MDI unit are included. Option boards are not included.
2 For other peripheral units (such as I/O units), see Table 3.2.1 (b) and also refer to the relevant manuals.
3 When you select the input DC power supply for the CNC control section, consider the restrictions other than the power supply capacity. Be sure to see also Subsection 4.4.2.
4 When an RS–232–C device using power from NC is connected to the RS–232–C port, the power capacity increases by one ampere.

Table 3.2.1 (b) Power supply rating

Unit	Power supply capacity	Remarks
MDI unit	0A	
Operator's panel I/O module	0.3A+7.3mA×DI	
Connector panel I/O module (basic)	0.2A+7.3mA×DI	
Connector panel I/O module (additional)	0.1A+7.3mA×DI	
I/O unit for 0*i*	0.3A+7.3mA×DI	
Separate detector interface unit	0.9A	Basic 4–axis unit only

NOTE
For the units related to I/O, the capacity of power for DO is not included.

3.3 DESIGN AND INSTALLATION CONDITIONS OF THE MACHINE TOOL MAGNETIC CABINET

When a cabinet is designed, it must satisfy the environmental conditions described in Section 3.1. In addition, the magnetic interference on the screen, noise resistance, and maintenance requirements must be considered. The cabinet design must meet the following conditions :

- The cabinet must be fully closed.

  The cabinet must be designed to prevent the entry of airborne dust,coolant,and organic solvent.
- The cabinet must be designed so that the permissible temperature of each unit is not exceeded. For actual heat design, see Section 3.4.
- A closed cabinet must be equipped with a fan to circulate the air within. (This is not necessary for a unit with fan.)
  The fan must be adjusted so that the air moves at 0.5 m/sec along the surface of each installed unit.

CAUTION
If the air blows directly from the fan to the unit, dust easily adheres to the unit. This may cause the unit to fail. (This is not necessary for a unit with fan.)

- For the air to move easily, a clearance of 100 mm is required between each unit and the wall of the cabinet. (This is not necessary for a unit with fan.)
- Packing materials must be used for the cable port and the door in order to seal the cabinet.
- The display unit must not be installed in such a place that coolant would directly fall onto the unit. The control unit has a dust–proof front panel, but the unit should not be placed in a location where coolant would directly fall onto it.
- Noise must be minimized.
  As the machine and the CNC unit are reduced in size, the parts that generate noise may be placed near noise–sensitive parts in the magnetics cabinet.
  The CNC unit is built to protect it from external noise. Cabinet design to minimize noise generation and to prevent it from being transmitted to the CNC unit is necessary. See section 3.5 for details of noise elimination/management.
- When placing units in the cabinet, also consider ease of maintenance. The units should be placed so that they can be checked and replaced easily when maintenance is performed.
- The hard disk drive and floppy disk drive must not be installed near the source of a strong magnetic field.

- The installation conditions of the I/O unit and connector panel I/O module must be satisfied.
  To obtain good ventilation in the module, the I/O unit and connector panel I/O module must be installed in the direction shown in the following figure. Clearances of 100 mm or more both above and below the I/O unit are required for wiring and ventilation.
  Equipment radiating too much heat must not be put below the I/O unit and connector panel I/O module.

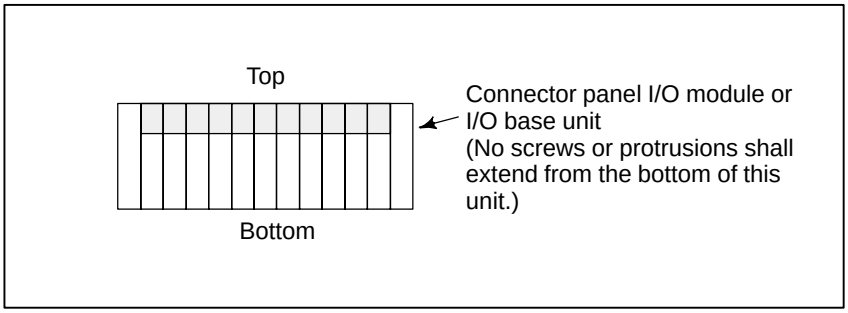

3.4 THERMAL DESIGN OF THE CABINET

The internal air temperature of the cabinet increases when the units and parts installed in the cabinet generate heat. Since the generated heat is radiated from the surface of the cabinet, the temperature of the air in the cabinet and the outside air balance at certain heat levels. If the amount of heat generated is constant, the larger the surface area of the cabinet, the less the internal temperature rises. The thermal design of the cabinet refers to calculating the heat generated in the cabinet, evaluating the surface area of the cabinet, and enlarging that surface area by installing heat exchangers in the cabinet, if necessary. Such a design method is described in the following subsections.

3.4.1 Temperature Rise within the Cabinet

The cooling capacity of a cabinet made of sheet metal is generally 6 W/°C per 1m^2 surface area, that is, when the 6W heat source is contained in a cabinet having a surface area of 1 m^2, the temperature of the air in the cabinet rises by 1°C. In this case the surface area of the cabinet refers to the area useful in cooling , that is, the area obtained by subtracting the area of the cabinet touching the floor from the total surface area of the cabinet. The air in the cabinet must be circulated by the fan to prevent an extreme uneven temperature distribution.

For example, the following expression must be satisfied to limit the difference in temperature between the air in the operator's panel cabinet, which accommodates the control unit, and the outside air to 13°C or less even when the temperature in the cabinet rises.

Internal heat loss P [W] ≦
6[W/m^2·°C] × surface area S[m^2]×13[°C] of rise in temperature

(A cooling capacity of 6 W/°C assumes the cabinet is so large that agitation with the fan motor does not make the temperature distribution uniform. For a small cabinet like the operator's panel, a cooling capacity of 8 W/°C, indicated in Subsection 3.4.4, may be used.)

For example, a cabinet having a surface area of 4m^2 has a cooling capacity of 24W/°C. To limit the internal temperature increase to 13°C under these conditions, the internal heat must not exceed 312W. If the actual internal heat is 360W, however, the temperature in the cabinet rises by 15°C or more. When this happens, the cooling capacity of the cabinet must be improved using the heat exchanger.

For the power magnetic cabinet containing an I/O unit for Series 0*i*, the internal temperature rise must be suppressed to 10°C or less, instead of 13°C.

3.4.2 Cooling by Heat Exchanger

If the temperature rise cannot be limited to 10°C by the cooling capacity of the cabinet, a heat exchanger must be added. The heat exchanger forcibly applies the air from both the inside and outside of the cabinet to the cooling fin to obtain effective cooling. The heat exchanger enlarges the surface area.

3.4.3 Heat Output of Each Unit

Table 3.4.3 (a) Heat output

Unit		0*i*	0*i* Mate	Heat output (W)	Remarks
Control unit	Without option slots	○	○	33W	(*1)
	With 2 option slots	○	—	37W	(*1)
Option board (*2)	HSSB board	○	—	3W	
	Serial communication board (DNC2)	○	—	6W	
	Data server board	○	—	9W	

NOTE

1 The liquid–crystal display and MDI unit are included. Option boards are not included.

2 When option boards are used, the total heat output of the selected option boards must not exceed the following value:

Rack type	Total heat output
2–slot rack	26W

Table 3.4.3 (b) Heat output

Unit	Heat output (W)	Remarks
MDI unit	0W	
Operator's panel I/O module	12W	(*1)
Connector panel I/O module (basic)	8W	(*1)
Connector panel I/O module (additional)	5W	(*1)
I/O unit for 0*i*		(*1)
Separate detector interface unit	9W	Basic 4–axis unit only(*2)

NOTE

1 The indicated values are when 50% of the module input signals are ON.

2 Heat output generated within the separate detector is not included.

3.4.4 Thermal Design of Operator's Panel

With a small cabinet like the operator's panel, the heat dissipating capacity of the cabinet is as shown below, assuming that there is sufficient mixing of the air inside the cabinet.
Coated metal surfaces: 8 W/m^2 · °C
Plastic surfaces: 3.7 W/m^2 · °C
An example of the thermal design for the cabinet shown in Fig. 3.4.4 is shown below.

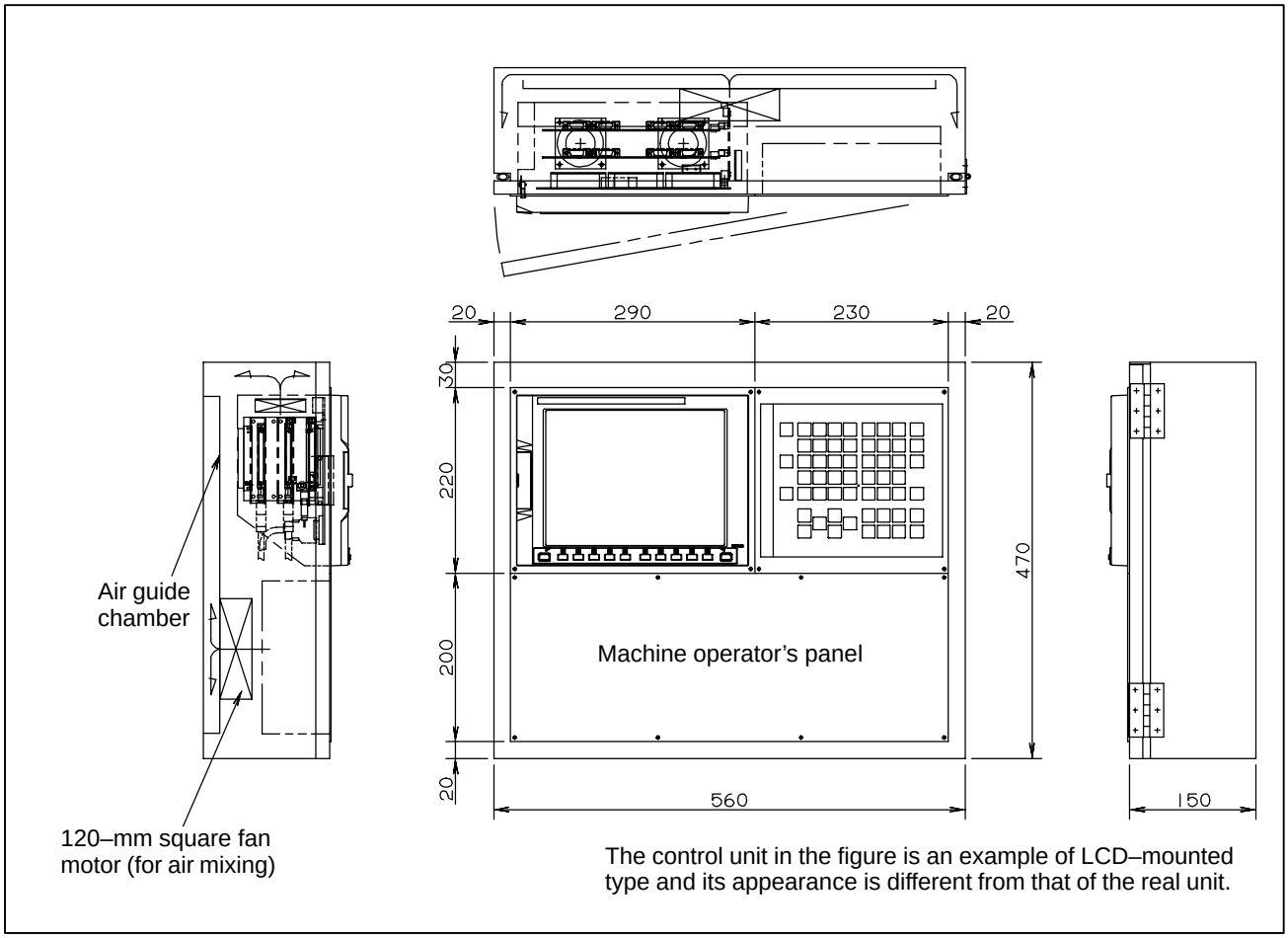

Fig. 3.4.4

Assume the following.
Thermal exchange rates : Coated metal surfaces 8 W/m^2 · °C
: Plastic surfaces 3.7 W/m^2 · °C
: Allowable temperature rise:
13°C higher than the exteriortemperature

Also, assume the following.
Dimensions of pendant type cabinet shown in Fig. 3.4.4:
560(W) × 470(H) × 150(D) mm
Surface area of metallic sections : 0.5722 m^2
Surface area of plastic sections : 0.2632 m^2

In this case, the allowable total heat dissipation for the cabinet is:
$8 \times 0.5722 \times 13 + 3.7 \times 0.2632 \times 13 = 72$ W.

In consequence, it can be concluded that the units shown in Table 3.4.4 on the next page can be installed in this cabinet.

Table 3.4.4

Control unit with option 2 slots	37W
Option board (serial communication board)	6W
Option board (data server board)	9W
Distributed operator's panel I/O module	12W
120–mm square fan motor for air mixing	8W
Total heat dissipation of the above	71W

NOTE

The 12 W quoted for the I/O module of the distribution–type operator's panel represents an example heat output value when half of all the input signals are turned on. This value varies, depending on the mechanical configuration.

3.5 ACTION AGAINST NOISE

The CNC has been steadily reduced in size using surface–mount and custom LSI technologies for electronic components. The CNC also is designed to be protected from external noise. However, it is difficult to measure the level and frequency of noise quantitatively, and noise has many uncertain factors. It is important to prevent both noise from being generated and generated noise from being introduced into the CNC. This precaution improves the stability of the CNC machine tool system.
The CNC component units are often installed close to the parts generating noise in the power magnetics cabinet. Possible noise sources into the CNC are capacitive coupling, electromagnetic induction, and ground loops.
When designing the power magnetics cabinet, guard against noise in the machine as described in the following section.

3.5.1 Separating Signal Lines

The cables used for the CNC machine tool are classified as listed in the following table:
Process the cables in each group as described in the action column.

Group	Signal line	Action
A	Primary AC power line	Bind the cables in group A separately (Note 1) from groups B and C, or cover group A with an electromagnetic shield (Note 2). See Section 3.5.4 and connect spark killers or diodes with the solenoid and relay.
	Secondary AC power line	
	AC/DC power lines (containing the power lines for the servo and spindle motors)	
	AC/DC solenoid	
	AC/DC relay	
B	DC solenoid (24VDC)	Connect diodes with DC solenoid and relay. Bind the cables in group B separately from group A, or cover group B with an electromagnetic shield. Separate group B as far from Group C as possible. It is more desirable to cover group B with the shield.
	DC relay (24VDC)	
	DI/DO cable between the CNC and power magnetics cabinet	
	DI/DO cable between the CNC and machine	
	24–VDC input power cables connected to the control unit and its peripherals	
C	I/O Link cable	Bind the cables in group C separately from group A, or cover group C with an electromagnetic shield. Separate group C as far from Group B as possible. Be sure to perform shield processing in Section 3.5.5.
	Cable for position and velocity feedback	
	Cable between the CNC and spindle amplifier	
	Cable for the position coder	
	Cable for the manual pulse generator	
	Cable between the CNC and the MDI (Note 3)	
	RS–232C and RS–422 interface cable	
	Cable for the battery	
	Other cables to be covered with the shield	

NOTE

1 The groups must be 10 cm or more apart from one another when binding the cables in each group.
2 The electromagnetic shield refers to shielding between groups with grounded steel plates.
3 The shield is not required when the cable between the CNC and MDI is shorter than 30 cm.

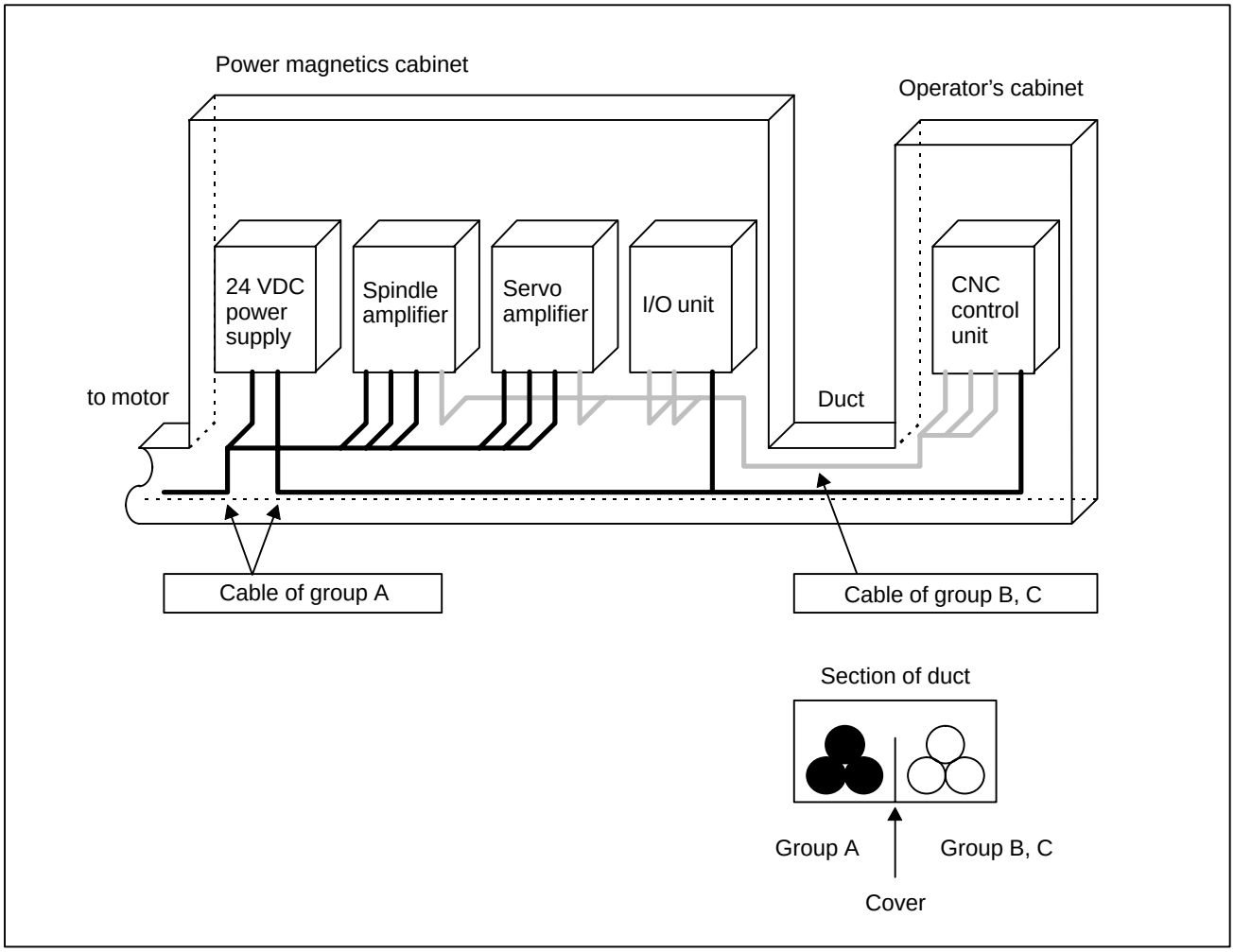

3.5.2 Ground

The CNC machine tool uses the following three types of grounding:

- Signal grounding
  Signal grounding supplies a reference potential (0 V) for electrical signals.
- Grounding for protection
  Grounding for protection is performed for safety reasons as well as to shield against external and internal noise. This type of grounding includes, for example, the equipment frames, cases and panels of units, and the shielding on interface cables connecting the equipment.
- Protective grounding (PE)
  Protective grounding (PE) is performed to connect protection grounds provided for equipment or between units to ground together at one point as a grounding system.

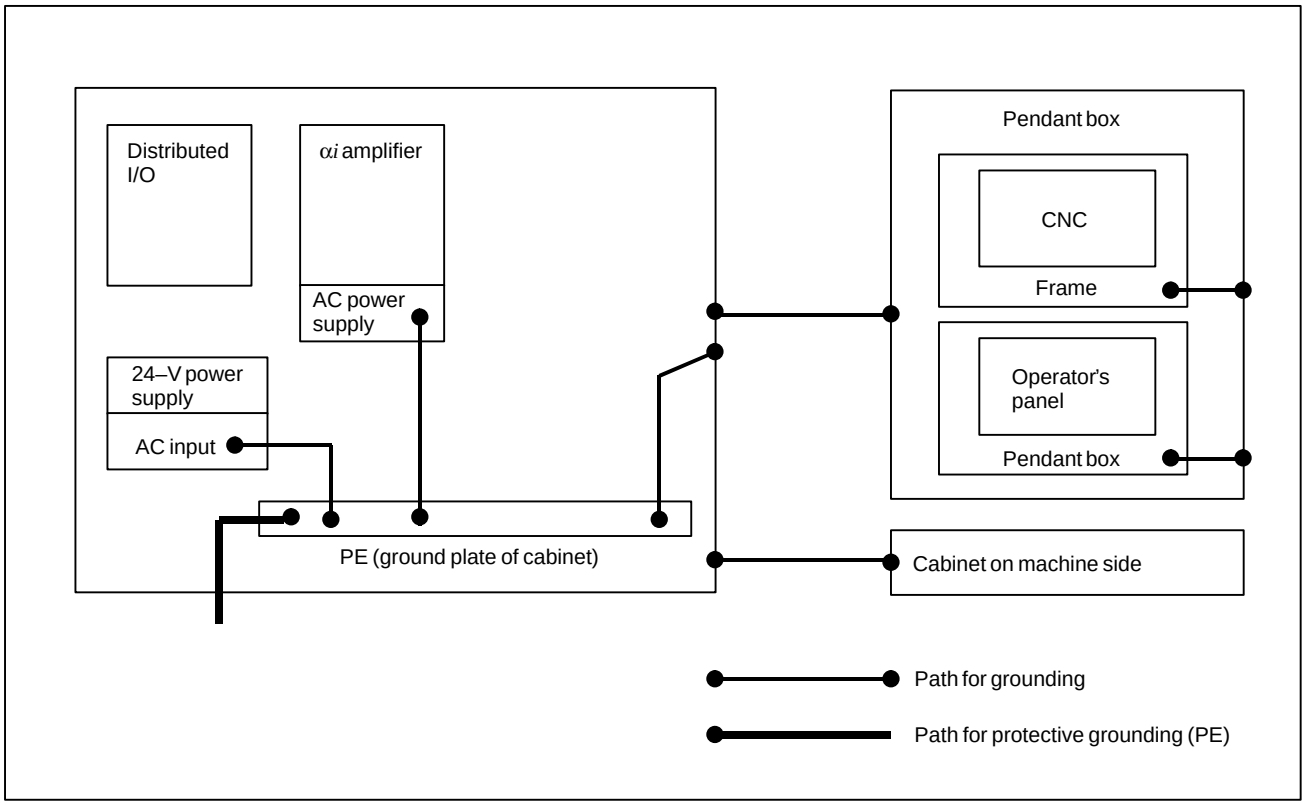

Notes on grounding

- The ground resistance in protective grounding (PE) must be 100 Ω or less (type D grounding).
- The cable used for protective grounding (PE) must be of a sufficient cross section to allow current to flow safely into protective ground (PE) if an accident such as a short–circuit occurs. (Generally, a cross section equal to or greater than that of the AC power cable is required.)
- The cable connected to protective ground (PE) must be incorporated into the AC power wire such that power cannot be supplied with the ground wire disconnected.

3.5.3 Connecting the Ground Terminal of the Control Unit

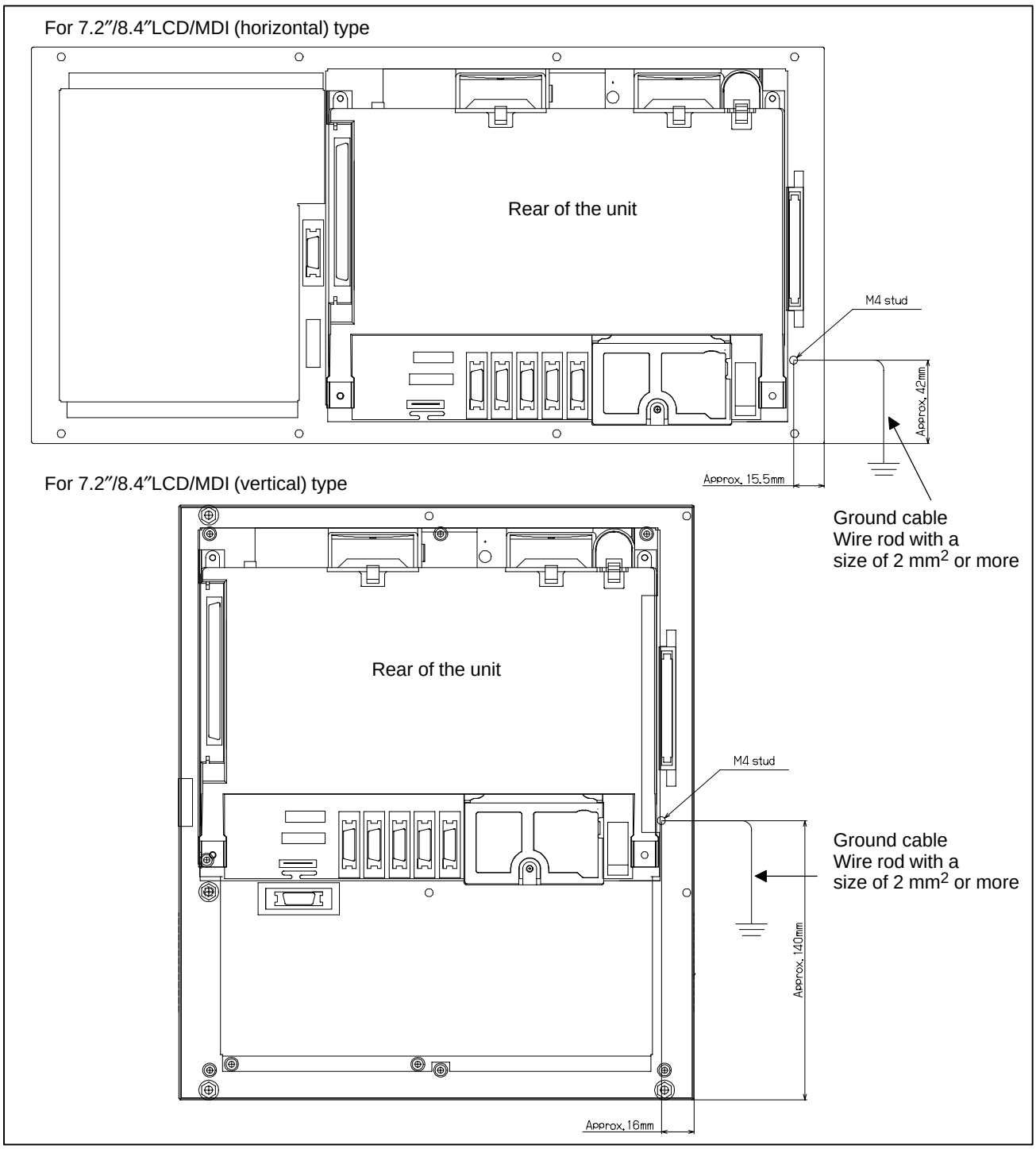

Connect the 0 V line in the control unit to the ground plate of the cabinet via the protective ground terminal (shown in the above figure).
For the positions of ground terminals for other units, see the unit outline drawing in the appendix.

3.5.4 Noise Suppressor

The AC/DC solenoid and relay are used in the power magnetics cabinet. A high pulse voltage is caused by coil inductance when these devices are turned on or off.
This pulse voltage induced through the cable causes the electronic circuits to be disturbed.

Notes on selecting the spark killer

- Use a spark killer consisting of a resistor and capacitor in series. This type of spark killer is called a CR spark killer.(Use it under AC)
  (A varistor is useful in clamping the peak voltage of the pulse voltage, but cannot suppress the sudden rise of the pulse voltage. FANUC therefore recommends a CR spark killer.)
- The reference capacitance and resistance of the spark killer shall conform to the following based on the current (I (A)) and DC resistance of the stationary coil:

  1) Resistance (R) : Equivalent DC resistance of the coil

  2) Capacitance (C) : $\frac{I^2}{10}$ to $\frac{I^2}{20}$ (μF)

  I : Current at stationary state of the coil [A]

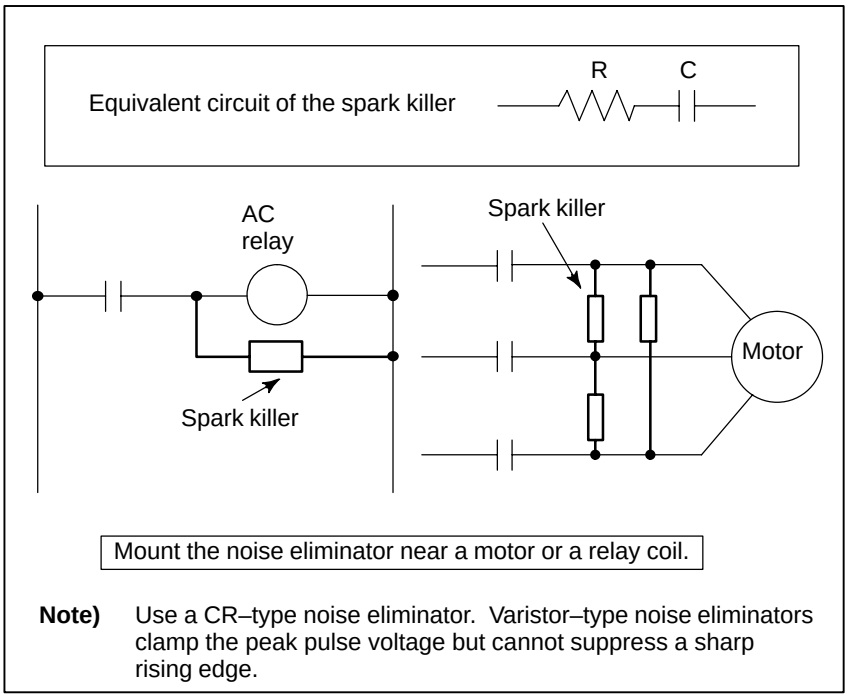

Note) Use a CR–type noise eliminator. Varistor–type noise eliminators clamp the peak pulse voltage but cannot suppress a sharp rising edge.

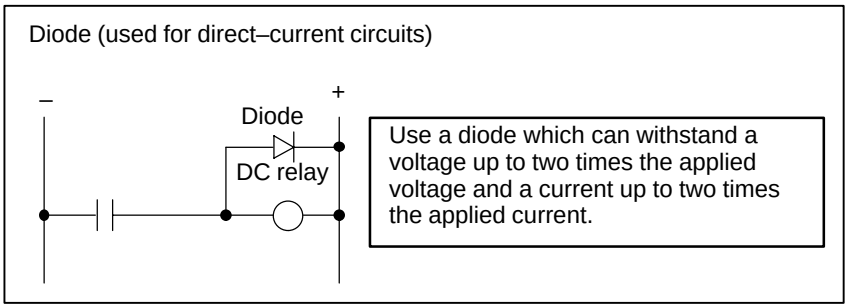

3.5.5 Cable Clamp and Shield Processing

If a cable connected to the CNC, servo amplifier, spindle amplifier, or other device requires shielding, clamp the cable as shown below. The clamp both supports and shields the cable. Use this clamp to ensure stable operation of the system.
Partially peel out the sheath and expose the shield. Push and clamp by the plate metal fittings for clamp at the part. The ground plate must be made by the machine tool builder, and set as follows :

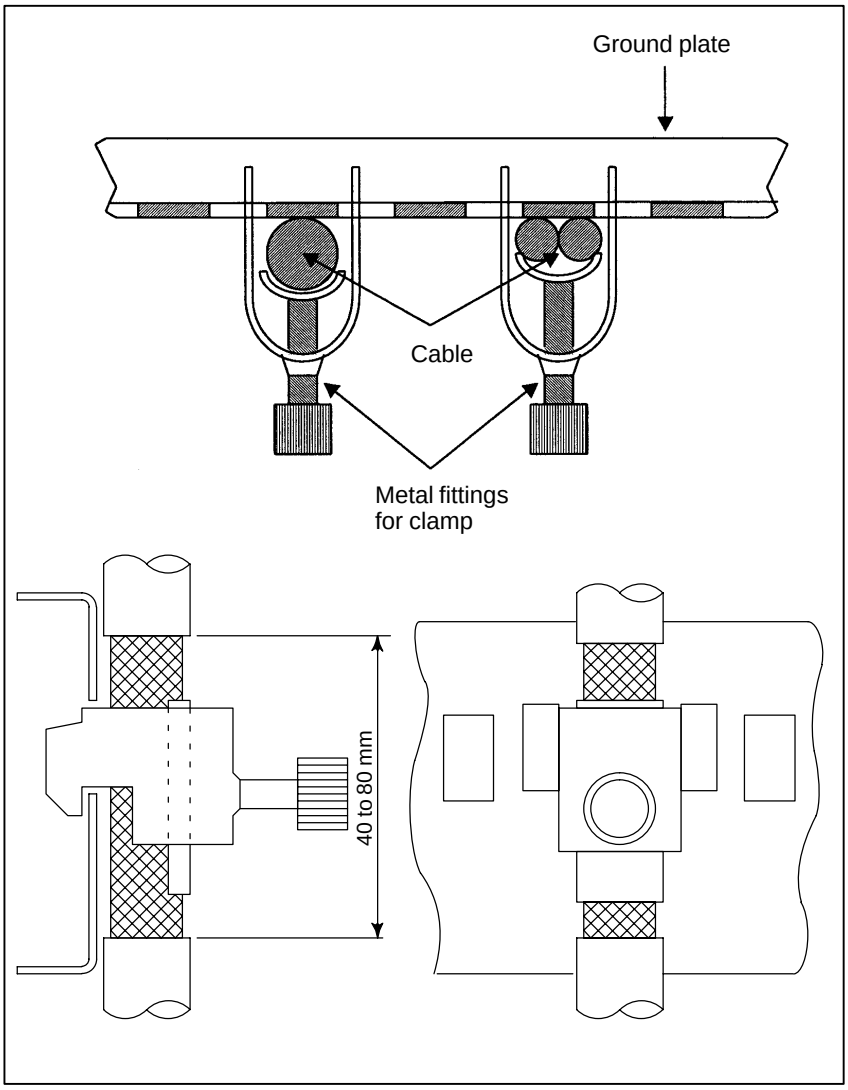

Fig. 3.5.5 (a) Cable clamp (1)

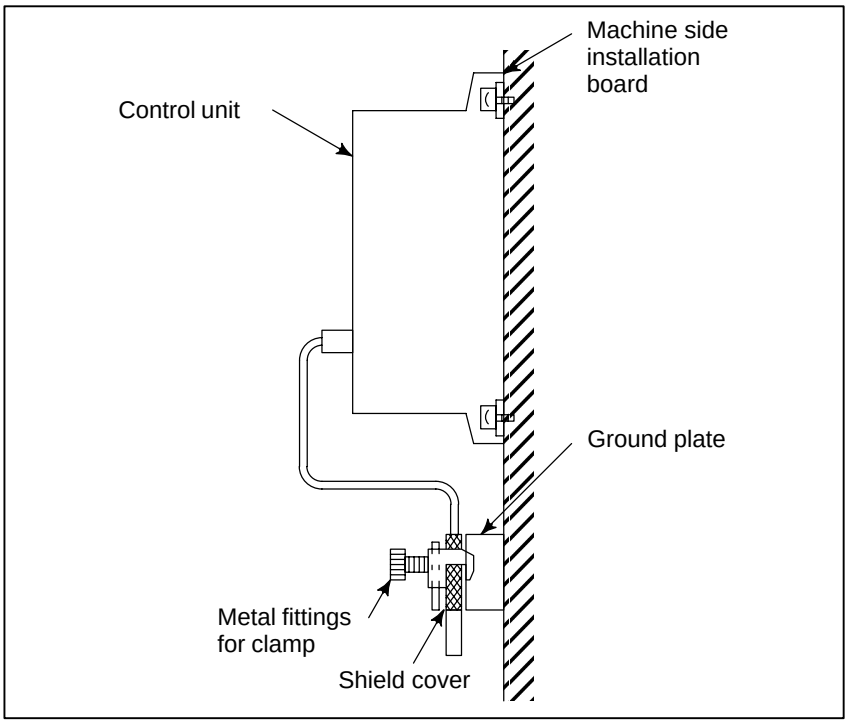

Fig. 3.5.5 (b) Cable clamp (2)

Prepare ground plate like the following figure.

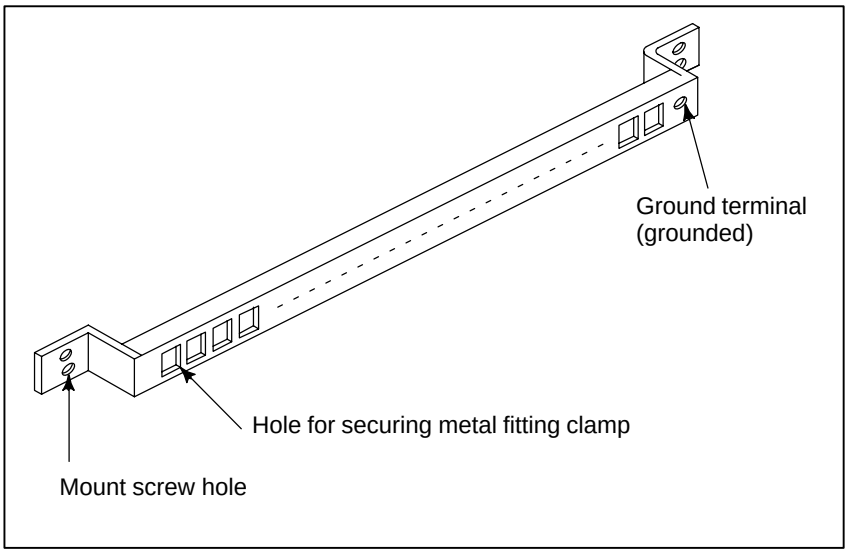

Fig. 3.5.5 (c) Ground plate

For the ground plate, use a metal plate of 2 mm or thicker, which surface is plated with nickel.

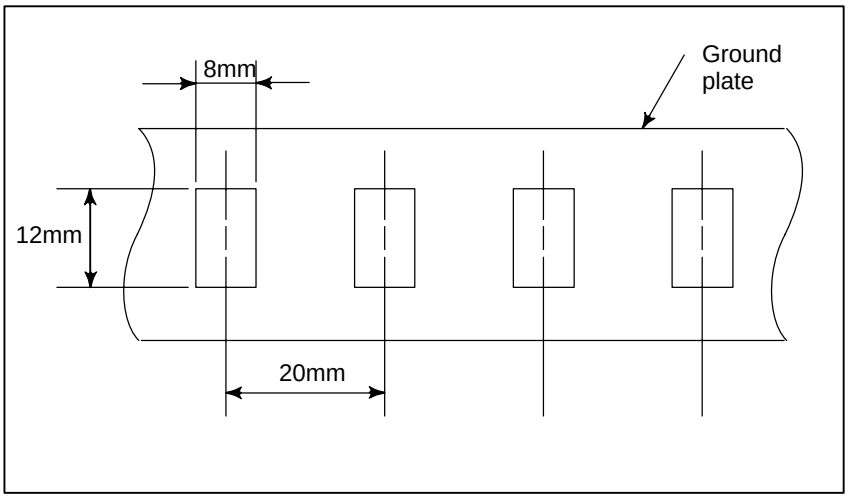

Fig. 3.5.5 (d) Ground plate holes

(Reference) Outer drawings of metal fittings for clamp.

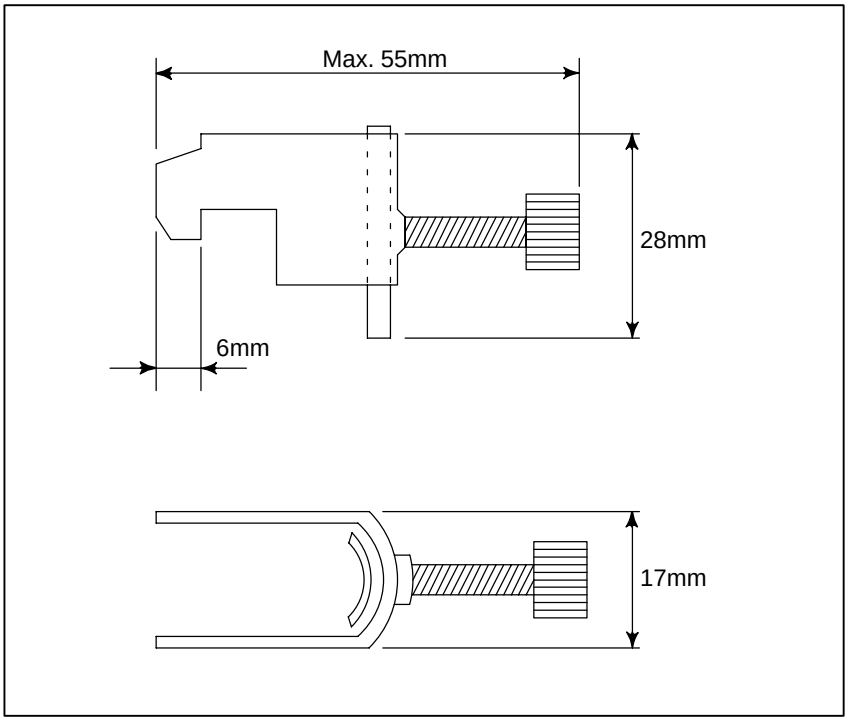

Fig. 3.5.5 (e) Outer drawings of metal fittings for clamp

Ordering specification for metal fittings for clamp
A02B–0124–K001 (8 pieces)

3.5.6 Measures Against Surges due to Lightning

To protect the devices from surge voltages due to lightening, it is recommended to install surge–absorbing elements between the lines of the input power and between one line and ground. This does not, however, assure protection from all surges due to lightening.
The recommended items are as follows. (Items made by Okaya Denki Sangyo Co.)

For the 200–V system

Between lines	R • A • V–781BYZ–2
Between line and ground	R • A • V–781BXZ–4

For the 400–V system

Between lines	R • A • V–152BYZ–2A
Between line and ground	R • A • V–801BXZ–4

Installation procedure

The surge–absorbing elements used for measures against surges due to lightening must be installed in the input power unit as shown in the figure below. The figure below shows an example in which an insulating transformer, shown by dotted lines, is not installed. If an insulating transformer is installed, surge–absorbing element 2 (between line and ground) is not required.

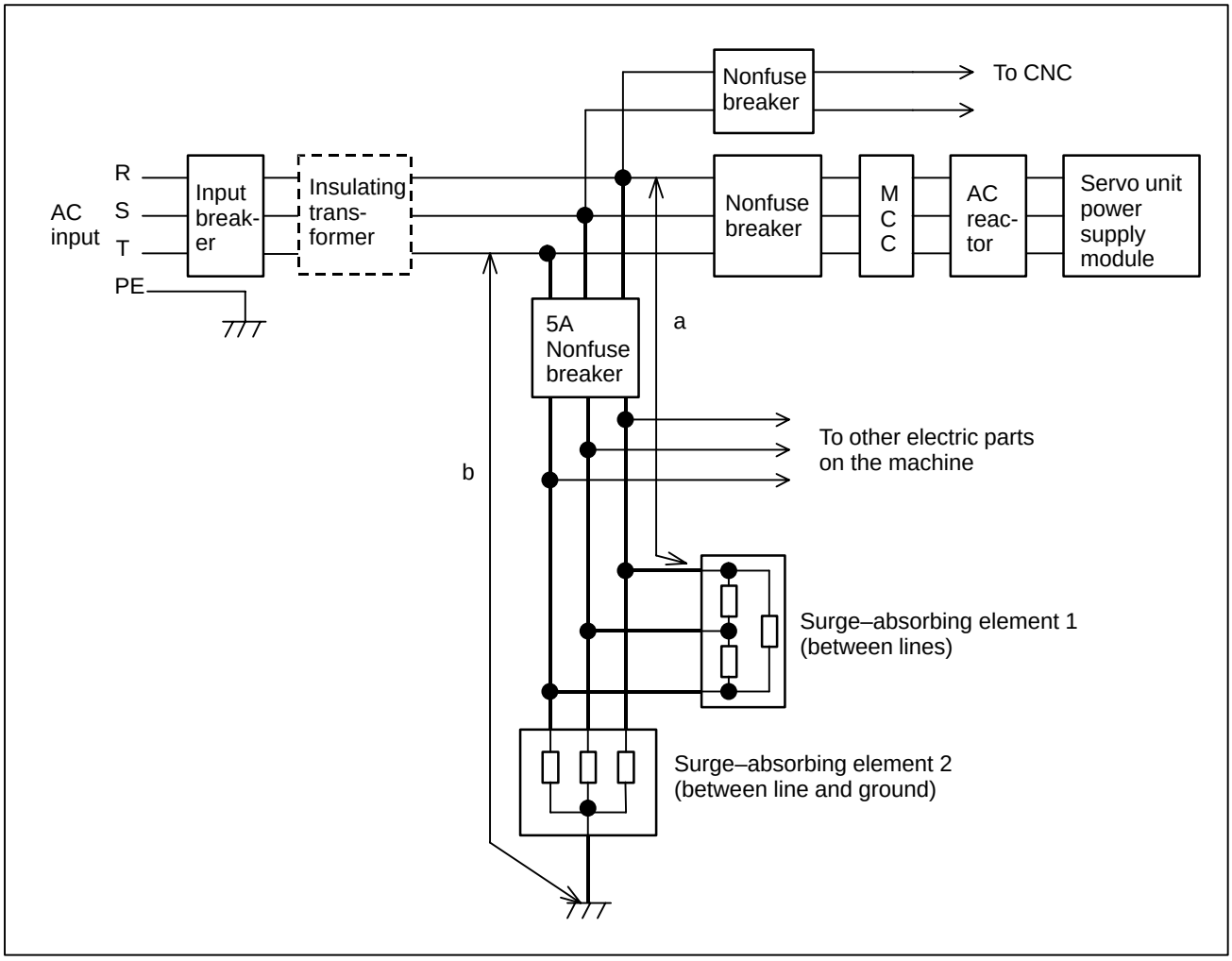

Notes

(1) For a better surge absorbing effect, the wiring shown by heavy line must be as short as possible.

Wire Size: The wire diameter must be 2 mm^2 or greater.

Wire length: The sum of the length (a) of the wire for the connection of surge–absorbing element 1 and that (b) of surge–absorbing element 2 must be 2 m or less.

(2) If conducting dielectric strength tests by applying overvoltages (1000 VAC and 1500 VAC) to the power line, remove surge–absorbing element 2. Otherwise, the overvoltages would activate the element.

(3) The nonfuse breaker (5A) is required to protect the line when a surge voltage exceeding the capacity of the surge–absorbing elements is applied and the surge–absorbing elements are short–circuited.

(4) Because no current flows through surge–absorbing elements 1 and 2 during normal operation, the nonfuse breaker (5A) can be shared by other electric devices on the machine. It can be used with the control power supply of the servo unit power supply module or with the power supply for the fan motor of the spindle motor.

3.6 CONTROL UNIT

3.6.1 Installation of the Control Unit

The control unit has a built–in fan motor.
Air enters the control unit through the bottom and is drawn through the fan motor which is located on the top of the control unit.

Space (A), shown in Fig. 3.6.1, must be provided to ensure unrestricted air flow. Also, space (B) should be provided whenever possible. When space (B) cannot be provided, ensure that nothing is placed in the immediate vicinity which could obstruct the air flow.

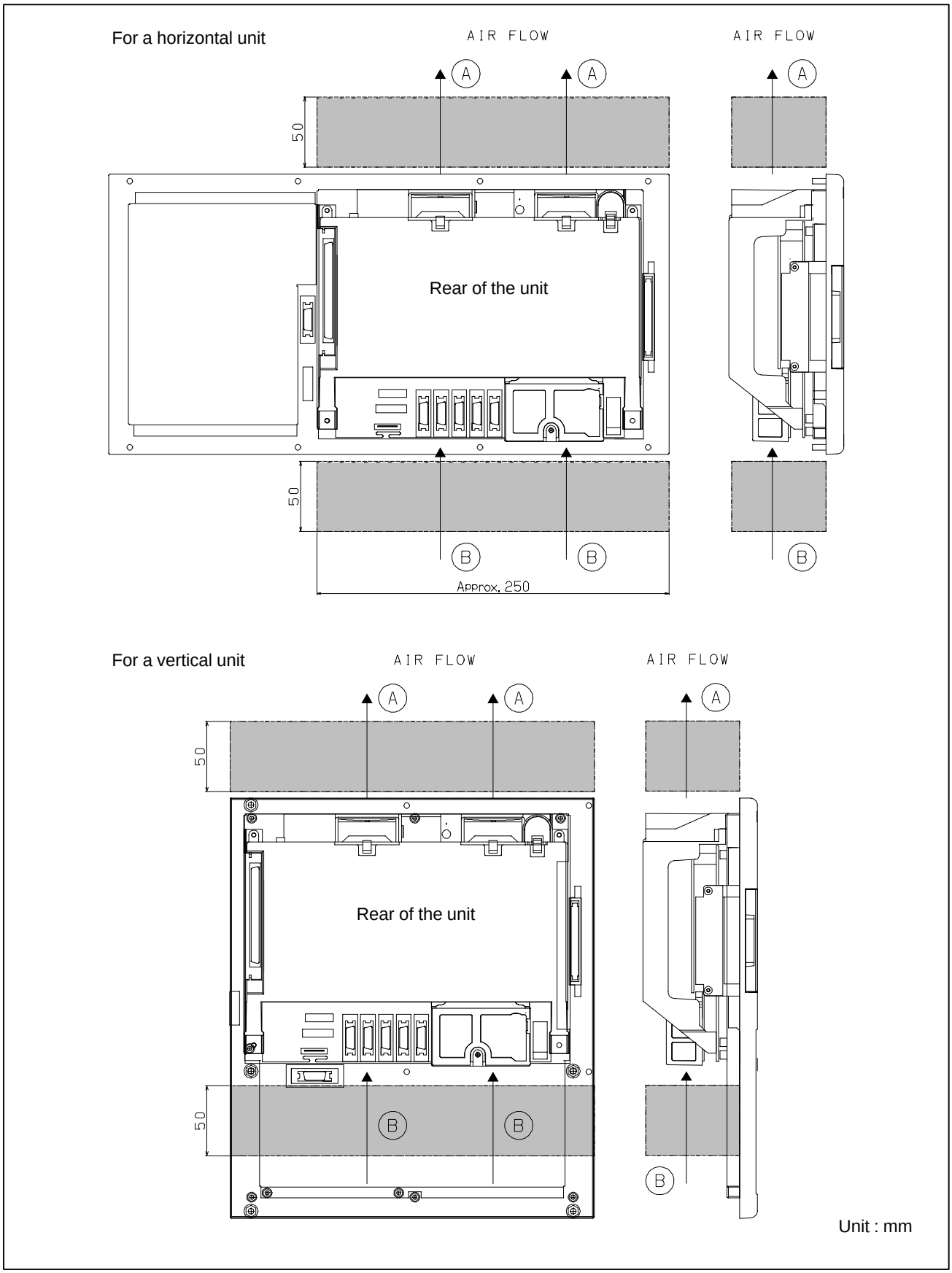
For a horizontal unit
AIR FLOW
AIR FLOW
A
A
A
50
Rear of the unit
50
B
B
B
Approx. 250
For a vertical unit
AIR FLOW
AIR FLOW
A
A
A
50
Rear of the unit
50
B
B
B
Unit : mm

Fig. 3.6.1

Installing the I/O unit for 0*i*

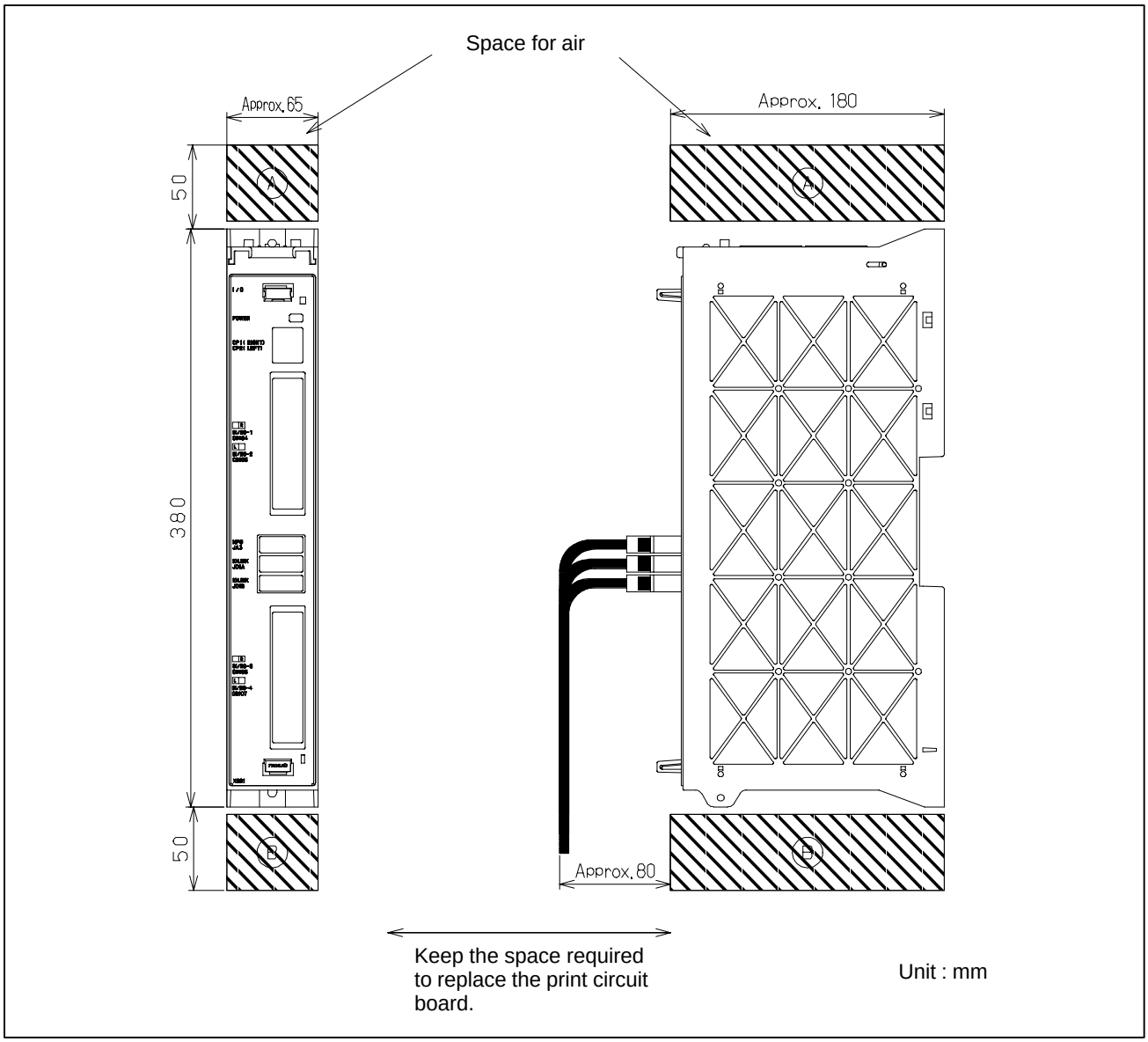

3.7 CABLING DIAGRAM

For the cabling diagram, see the control unit configuration and component names in Section 1.1.

3.8 DUSTPROOF MEASURES FOR CABINETS AND PENDANT BOXES

The cabinet and pendant box that house a display and a operator's panel that are to be designed and manufactured by the machine tool builder are susceptible to dust, cutting debris, oil mist, etc. Note the following and make sure that they are structured to prevent their entry.

1) The cabinet and pendant box must be of a hermetically sealed structure.
2) Apply packing to the panel mounting surface to which a display and operator's panel are to be mounted.
3) Make sure that the door packing of the cabinet and pendant box is sealed firmly.
4) For a cabinet or pendant box with a rear cover, apply packing to the mounting surface.
5) Fill the opening between the cable and the cable entrance with a packing or connector for conduits.
6) Make sure that all other openings are blocked, if any.
7) Make sure that the display and operator's panel do not receive cutting debris and coolant directly.
8) Oil can easily stay on the top of the cabinet and pendant box, possibly dripping down the display and operator's panel. Make sure that the cabinet and pendant box is of such a structure that oil do not collect or that oil do not drip down the display or panel.

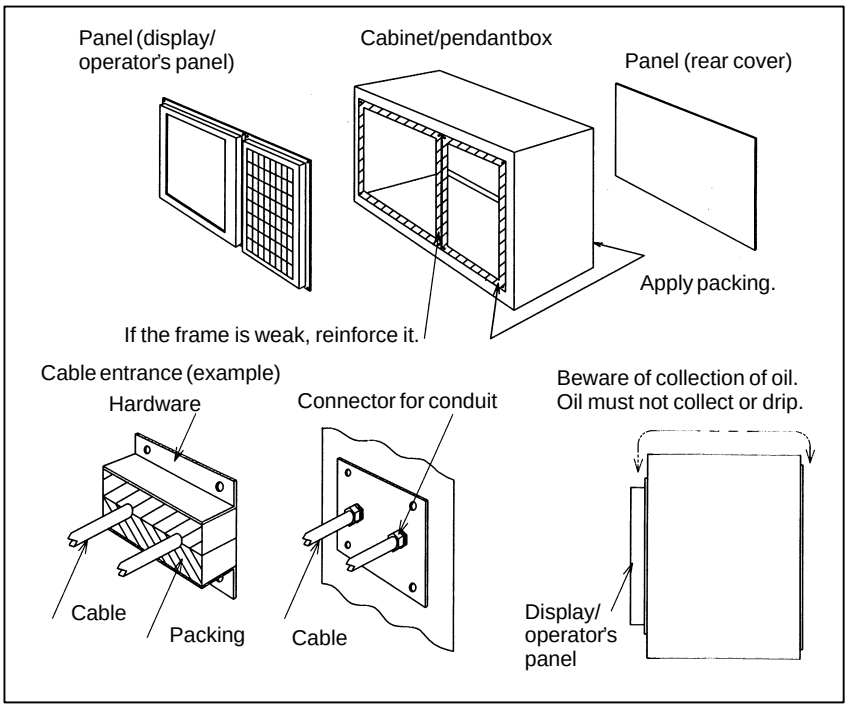

4 POWER SUPPLY CONNECTION

4.1 GENERAL

This section explains the connection of power supply for Series 0*i*/Series 0*i* Mate control unit.

4.2 TURNING ON AND OFF THE POWER TO THE CONTROL UNIT

4.2.1 Power Supply for the Control Unit

Supply power (24VDC) to the control uint of Series 0*i*/Series 0*i* Mate from an external sources.

Provide ON/OFF circuit A for turning the AC power on and off on the input side of the 24VDC power supply as shown in Fig. 4.2.1 (a). Avoid turning the DC power on and off (ON/OFF circuit B).

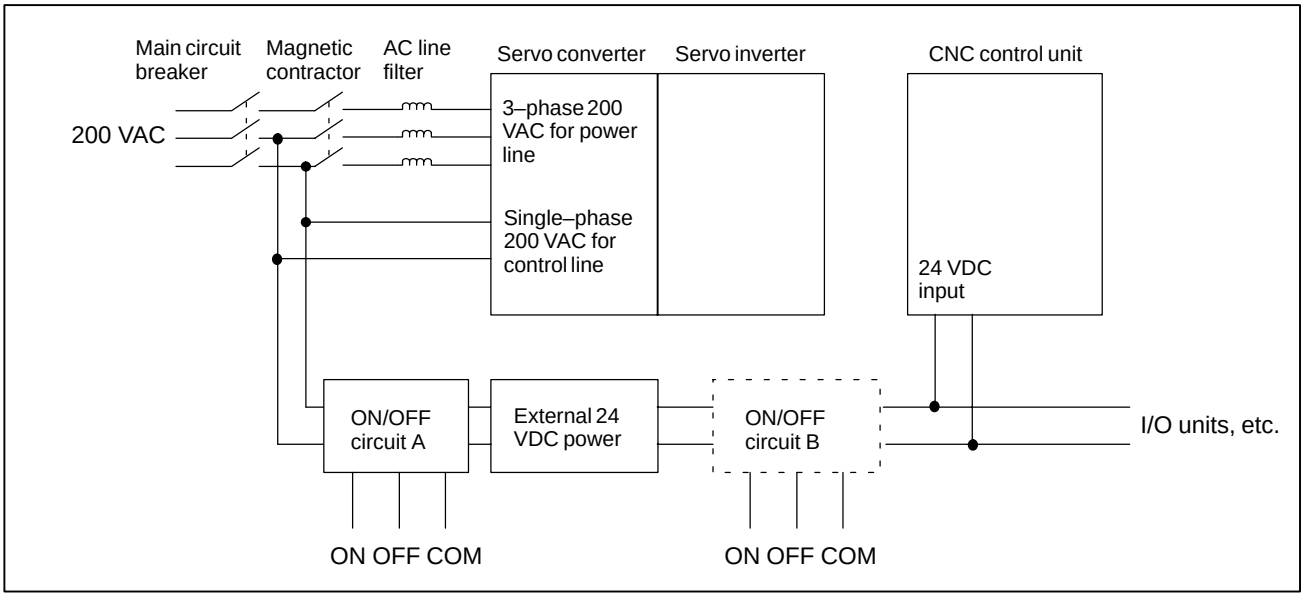

Fig. 4.2.1 (a)

ON/OFF circuit B (example)

For example, “ON/OFF circuit” is as follows : (Fig. 4.2.1 (b))
Select the circuit devices, in consideration of its capacity.

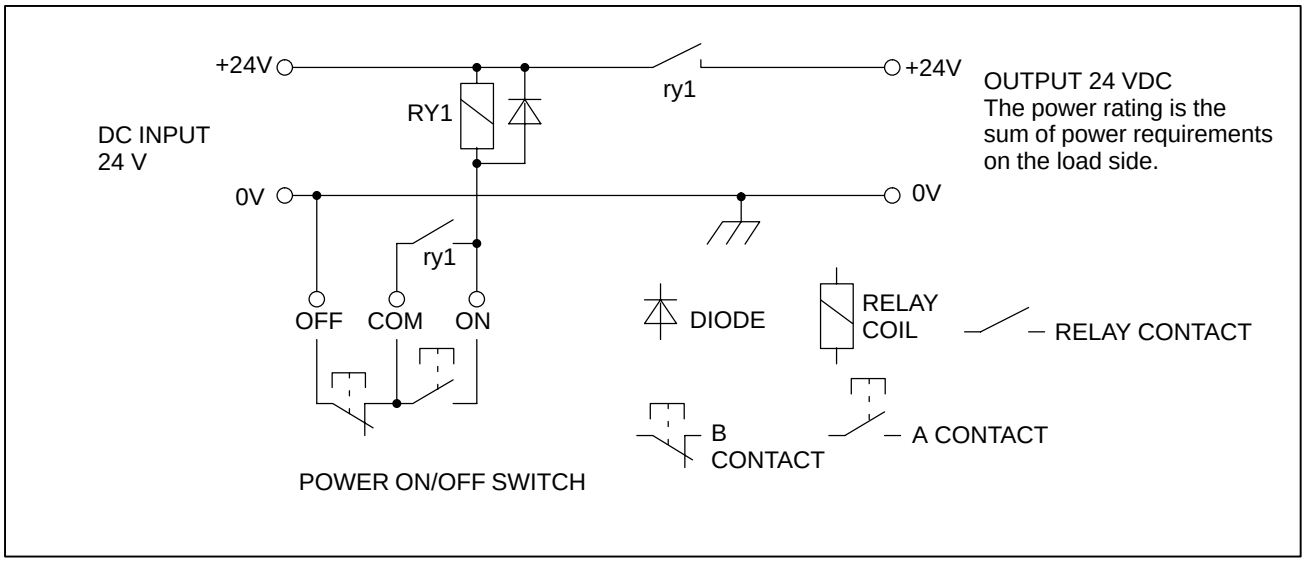

Fig. 4.2.1 (b)

4.2.2 External 24 VDC Power Supply and Circuit Configurations

Specifications of recommended external 24 VDC power supply (regulated power supply): (The power supply must satisfy UL1950.)

Output voltage: +24 V (10% (21.6 V to 26.4 V)
(including ripple voltage and noise. See the figure below.)

Output current: The continuous load current must be larger than the current consumption of the CNC.
(At the maximum temperature inside the power magnetics cabinet in which the power supply is located)

Load fluctuations (including rush current):
The output voltage must not go out of the above range due to load fluctuations by external DO and other factors.

Instantaneous input interruption retention time: 10 mS (for –100%)
20 mS (for –50%)

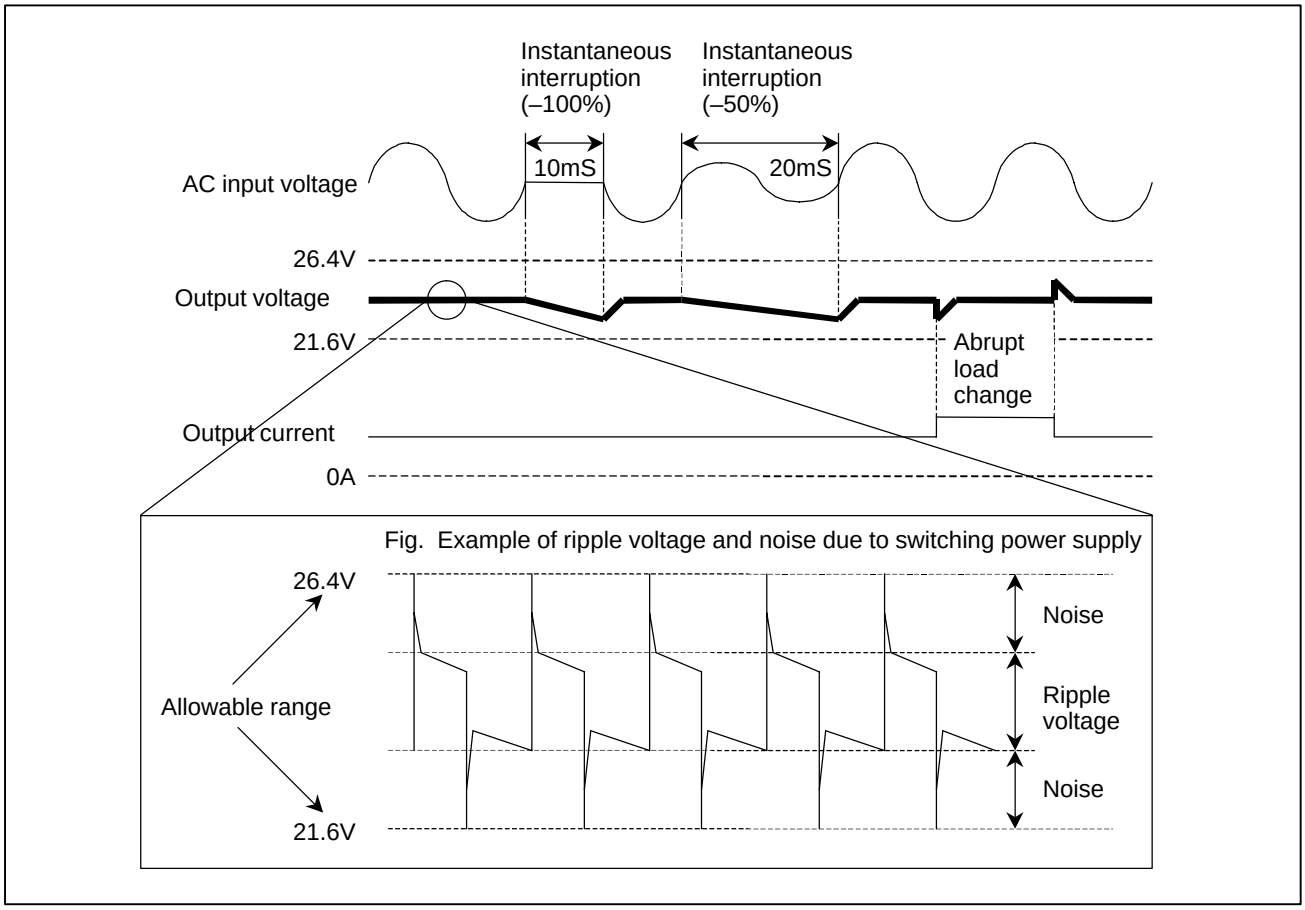

Fig 4.2.2 (a) Timing chart

- **Notes to take when the vertical axis exists**

When the vertical axis exists, select the DC power supply that has a long voltage hold time to decrease the amount of vertical axis falling during power–off (including a power failure).
If the operating voltage drops to less than or equal to 21.6V, the CNC releases servo activation. Therefore, when the hold time for 24 VDC during AC power–off is too short, servo activation is released before the breaks are applied because some peripheral circuit detects power–off. This may increase the amount of vertical axis falling.
Generally, a power supply with sufficient power capacity tends to increase the hold time during power–off.

- **Circuit configurations**

Forbidden

The following circuit configurations are not recommended.

1 Circuit examples that cannot retain the output voltage at an instantaneous interruption (the voltage reduces to 21.6 V or below)

Example 1

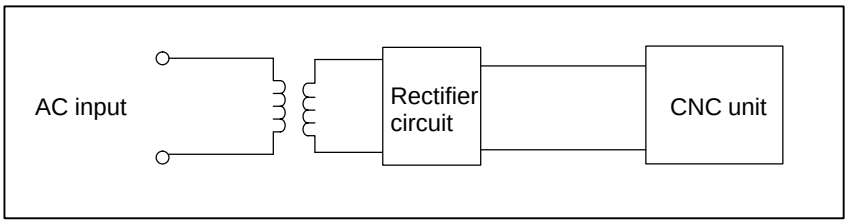

Example 2

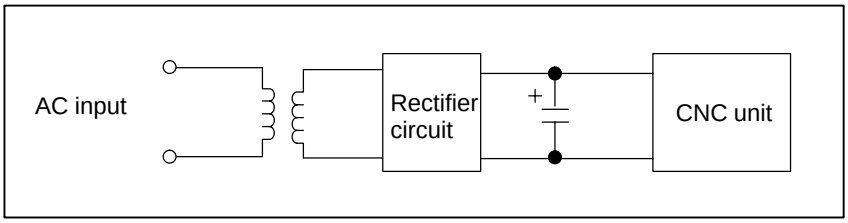

NOTE
The rectifier circuit means a circuit using diodes for full–wave rectification.

2 Circuit examples that exceed the output voltage specifications (21.6 V to 26.4 V) due to an abrupt load change

Example 1

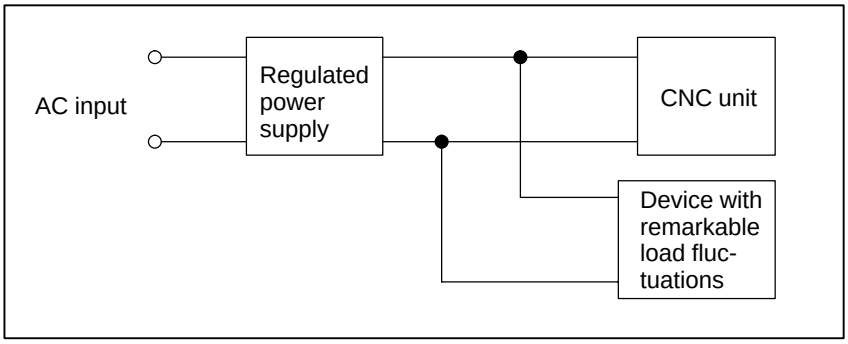

Example 2

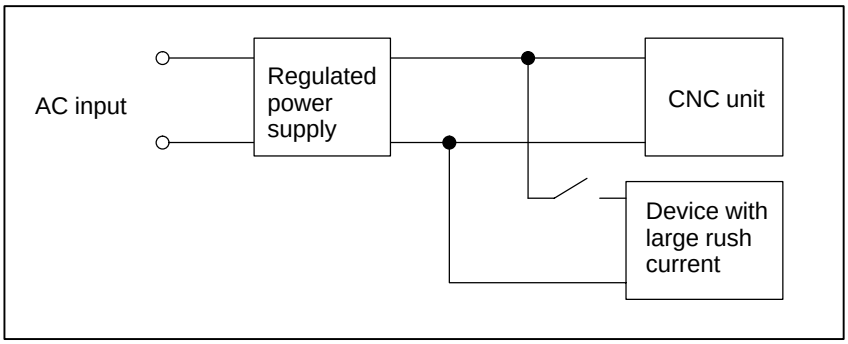

For a circuit configuration in example 2, connect another regulated power supply to be specifically used for the device with remarkable load fluctuations so that the CNC and other units are not affected.

Recommended

If you find instructions to ”turn the power on simultaneously when or before turning the power to the CNC on” for a unit such as a 24 VDC power supply, turn the power to the unit simultaneously when turning on the power to the CNC on from now on. To turn the power to such a unit simultaneously when turning the power to the CNC on, connecting the unit on the same line as for the CNC as shown in Fig. 4.2.2 (b) is recommended.
Turning the power to units on simultaneously when turning the power to the CNC:
When the following power–on timing condition is satisfied, the power to units is assumed to be turned on simultaneously when the power to the CNC is turned on.

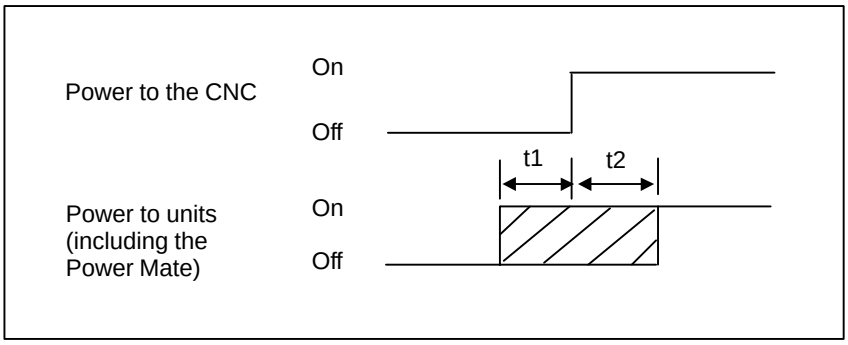

t1 : 200 ms Means that the power to units (including the Power Mate) is turned on within 200 ms before the power to the CNC is turned on.

t2 : 500 ms Means that the power to units (including the Power Mate) is turned on within 500 ms after the power to the CNC is turned on.

For instructions to ”turn the power off simultaneously when or after turning the power to the CNC off” for a unit such as a 24 VDC power supply, the power–off sequence is not changed unlike the above power–on sequence. (Turning the power off simultaneously when turning the power to the CNC on means that the power may be turned off within 500 ms before the power to the CNC is turned off.)

The following circuit configuration is recommended.
The power to the CNC and other units (A unit with I/O Link, FANUC Servo Unit β Series with an I/O link (β amplifier with an I/O link), and so on in the sample configuration below) is assumed to be turned on at the same time. (The power to any unit is not assumed to be turned on during operation or before the power to the CNC is turned on. No unit is assumed to be connected between the 24 VDC output of the regulated power supply and input of on/off circuit B.)

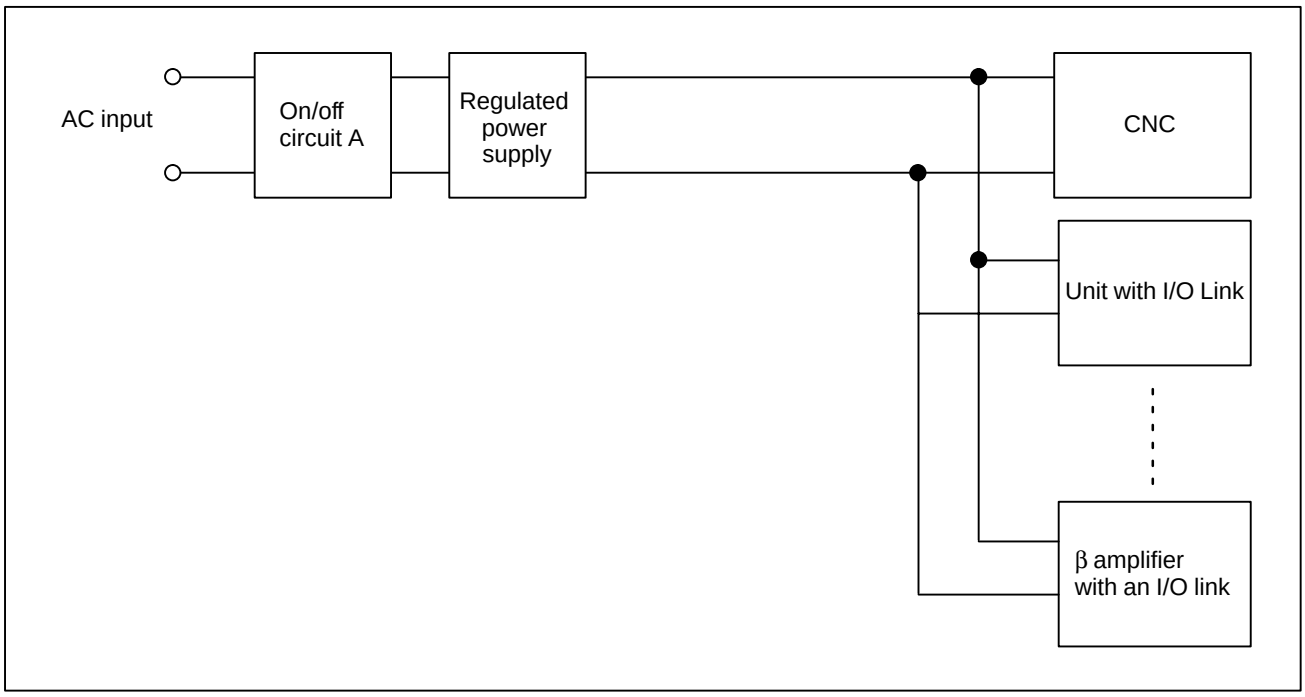

Fig 4.2.2 (b)

4.2.3 Procedure for Turning On the Power

Turn on the power to each unit in the following order or all at the same time.

1. Power to the overall machine (200 VAC)
2. Servo amplifier control power supply (200 VAC)
3. Power to the slave I/O units connected via the I/O link,
   power to the display unit (24VDC),
   the CNC control unit,
   power to the separate detector (scale),
   and power to the separate detector interface unit (24VDC)

"Turning on the power to all the units at the same time" means completing the power–on operations in 1 and 2 above within 500 ms of performing power–on in 3.

Do not disconnect the battery for memory backup (3 VDC) or the battery for the separate absolute pulse coders (6 VDC) regardless of whether the power to the control unit is on or off. If batteries are disconnected when the power to the control unit is turned off, current data stored in the control unit for the pulse coders, parameters, programs etc, are lost.

Make sure that the power to the control unit is on when replacing batteries.

See Section 4.4.1 for how to replace the batteries for memory backup.

4.2.4 Procedure for Turning Off the Power

Turn off the power to each unit in the following order or all at the same time.

1. Power to the slave I/O units connected via the I/O link, power to the display unit (24VDC), the CNC control unit (24 VDC), and power to the separate detector interface unit (24 VDC)
2. Servo amplifier control power supply (200 VAC) and power to the separate detector (scale)
3. Power to the overall machine (200 VAC)

"Turning off the power to all units at the same time" means completing the power–off operations in 2 and 3 above within 500 ms before the power–off operation described in 1 above. If the power to the units indicated in 2 or 3 is turned off other than within 500 ms of the power in 1 being turned off, alarm information is left in the NC.

Motors cannot be controlled when the power is turned off or momentarily interrupted. Take appropriate action on the machine side when necessary. For example, when the tool is moved along a gravity axis, apply brakes to prevent the axis from falling. Apply a brake that clamps the motor when the servo is not operating or the motor is not rotating. Release the clamp only when the motor is rotating. When the servo axis cannot be controlled when the power is turned off or momentarily interrupted, clamp the servo motor. In this case, the axis may fall before the relay for clamping starts operating. The designer should make sure if the distance results in trouble.

4.3 CABLE FOR POWER SUPPLY TO CONTROL UNIT

Supply power to the control unit from external resouce.
The brackets in the figures are the stand–alone type connector name.

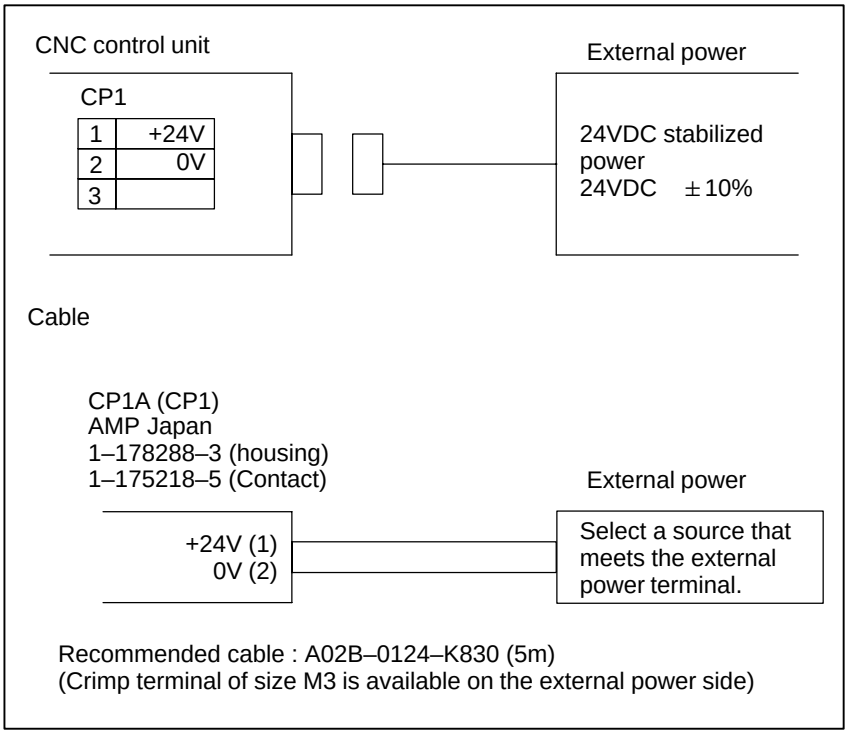

4.4 BATTERIES

In a system using this CNC, batteries are used as follows:

Use	Component connected to battery
Memory backup in the CNC control unit	CNC control unit
Preservation of the current position indicated by the separate absolute pulse coder	Separate detector interface unit
Preservation of the current position indicated by the absolute pulse coder built into the motor	Servo amplifier

Used batteries must be discarded according to appropriate local ordinances or rules. When discarding batteries, insulate them by using tape and so forth to prevent the battery terminals from short–circuiting.

4.4.1 Battery for Memory Backup (3VDC)

Part programs, offset data, and system parameters are stored in CMOS memory in the control unit. The power to the CMOS memory is backed up by a lithium battery mounted on the front panel of the control unit. The above data is not lost even when the main battery goes dead. The backup battery is mounted on the control unit at shipping. This battery can maintain the contents of memory for about a year.
When the voltage of the battery becomes low, alarm message “BAT” blinks on the display and the battery alarm signal is output to the PMC. When this alarm is displayed, replace the battery as soon as possible. In general, the battery can be replaced within two or three weeks, however, this depends on the system configuration.
If the voltage of the battery becomes any lower, memory can no longer be backed up. Turning on the power to the control unit in this state causes system alarm 935 (ECC error) to occur because the contents of memory are lost. Clear the entire memory and reenter data after replacing the battery.
Therefore, FANUC recommends that the battery be replaced once a year regardless of whether alarms are generated.
The power to the control unit must be turned on when the battery is replaced. If the battery is disconnected when the power is turned off, the contents of memory are lost.
Observe the following precautions for lithium batteries:

WARNING
If an unspecified battery is used, it may explode.
Replace the battery only with the specified battery (A02B–0200–K102.)

In addition to the Lithium battery built into the CNC control unit, commercial D–size alkaline batteries can be used by installing the battery case externally.

NOTE
A lithium battery is installed as standard at the factory.

Replacing the lithium battery

(1) Prepare a new lithium battery (ordering drawing number: A02B–0200–K102).

(2) Turn on the power of the control unit once for about 30 seconds.

(3) Turn off the power of the control unit.

(4) Remove the old battery from the top of the CNC control unit.
First unplug the battery connector then take the battery out of its case. The battery case of a control unit without option slots is located at the top right end of the unit. That of a control unit with 2 slots is located in the central area of the top of the unit (between fans).

(5) Insert a new battery and reconnect the connector.

NOTE

Complete steps (3) to (5) within 10 minutes. Do not leave the control unit without a battery for any longer than the period shown, as this will result in the contents of memory being lost.

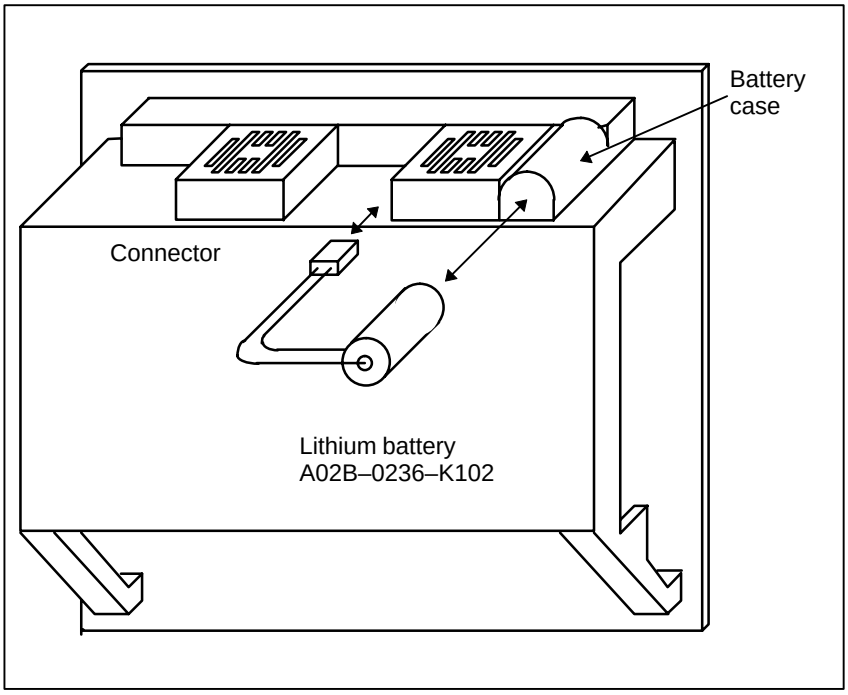

WARNING

Incorrect battery replacement may cause an explosion. Do not use a battery other than that specified (specification: A02B–0200–K102).

Replacing the alkaline dry cells (size D)

(1) Prepare two new alkaline dry cells (size D).
(2) Turn on the power of the control unit once for about 30 seconds.
(3) Turn off the power of the control unit.
(4) Remove the battery case cover.
(5) Replace the batteries, paying careful attention to their orientation.
(6) Replace the battery case cover.

NOTE
When replacing the dry cells, use the same procedure as that for lithium battery replacement procedure, described above.

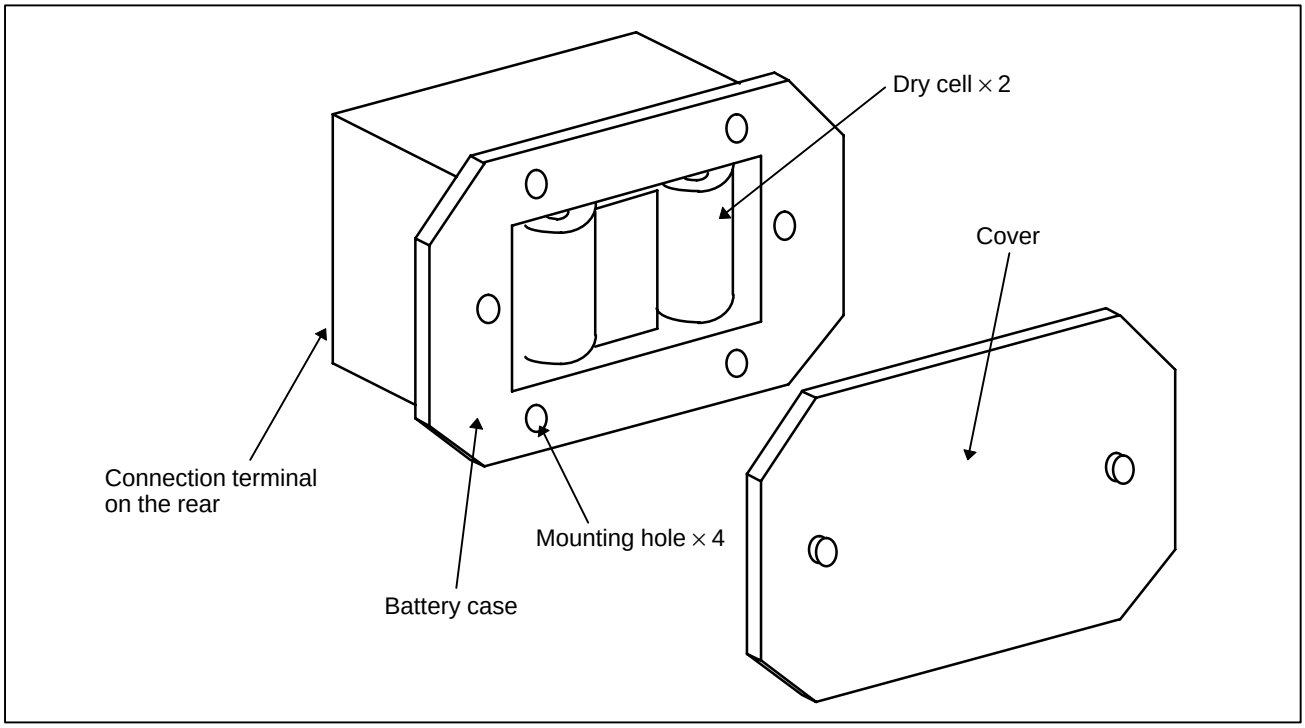

Use of alkaline dry cells (size D)

Connection

Power from the external batteries is supplied through the connector to which the lithium battery is connected. The lithium battery, provided as standard, can be replaced with external batteries in the battery case (A02B–0236–C281) according to the battery replacement procedures described above.

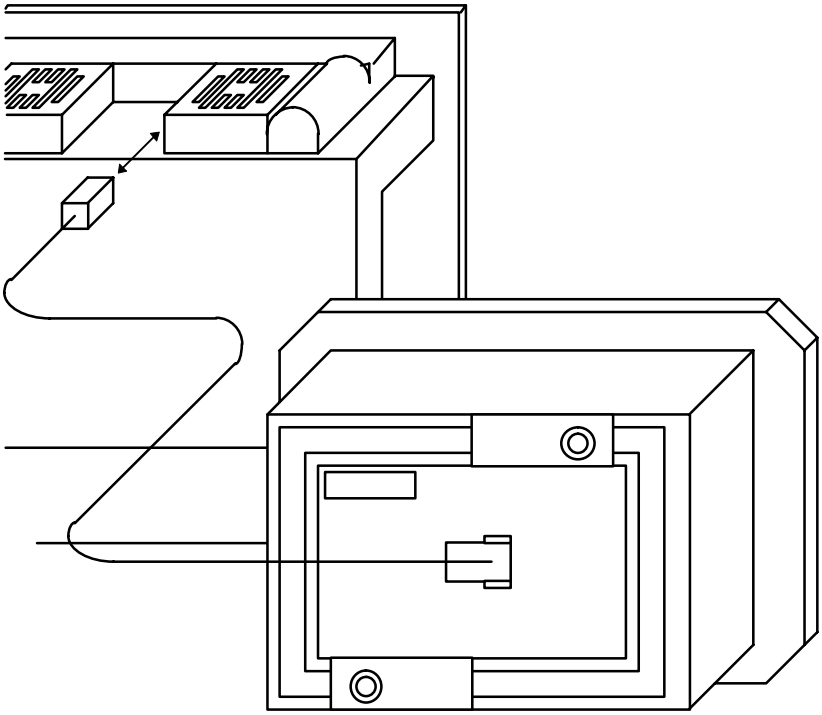

NOTE

1 Install the battery case (A02B–0236–C281) in a location where the batteries can be replaced even when the control unit power is on.

2 The battery cable connector is attached to the control unit by means of a simple lock system. To prevent the connector from being disconnected due to the weight of the cable or tension within the cable, fix the cable section within 50 cm of the connector.

4.4.2 Battery for Separate Absolute Pulse Coders (6VDC)

One battery unit can maintain current position data for six absolute pulse coders for a year.
When the voltage of the battery becomes low, APC alarms 3n6 to 3n8 (n: axis number) are displayed on the LCD display. When APC alarm 3n7 is displayed, replace the battery as soon as possible. In general, the battery should be replaced within one or two weeks, however, this depends on the number of pulse coders used.
If the voltage of the battery becomes any lower, the current positions for the pulse coders can no longer be maintained. Turning on the power to the control unit in this state causes APC alarm 3n0 (reference position return request alarm) to occur. Return the tool to the reference position after replacing the battery.
Therefore, FANUC recommends that the battery be replaced once a year regardless of whether APC alarms are generated.
See Section 7.1.3 for details of connecting the battery to separate absolute pulse coders.

Replacing batteries

Obtain four commercially available alkaline batteries (size D).

(1) Turn on the power of the machine (turn on the servo amplifier).

(2) Loosen the screws of the battery case, and remove the cover.

(3) Replace the dry batteries in the case.
Note the polarity of the batteries as shown in the figure below (orient two batteries one way and the other two in the opposite direction).

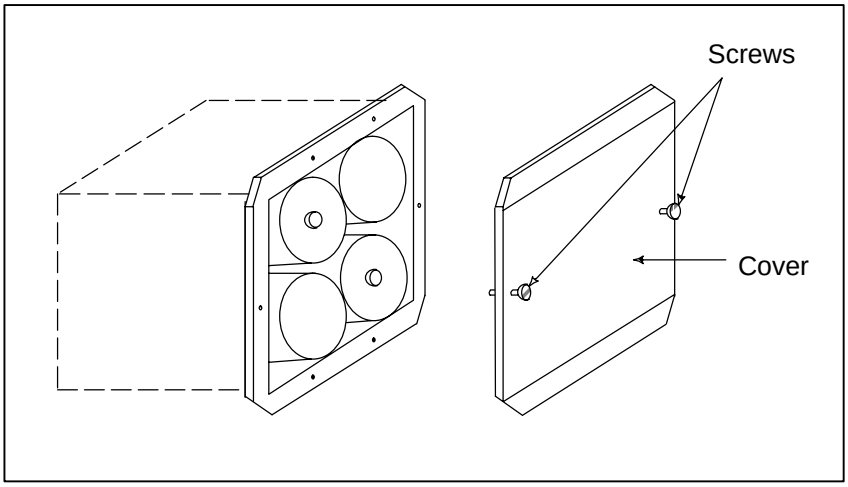

(4) After installing the new batteries, replace the cover.

(5) Turn off the power to the machine.

WARNING
If the batteries are installed incorrectly, an explosion may occur. Never use batteries other than the specified type (Size D alkaline batteries).

CAUTION

The battery must be replaced with the power of the machine turned on (the servo amplifier turned on).
Note that, if batteries are replaced while no power is supplied to the CNC, the recorded absolute position is lost.

4.4.3 Battery for Absolute Pulse Coder Built into the Motor (6VDC)

The battery for the absolute pulse coder built into the motor is installed in the servo amplifier. For how to connect and replace the battery, refer to the following manuals:

- FANUC SERVO MOTOR α*i*s series Maintenance Manual
- FANUC SERVO MOTOR β*i* series Maintenance Manual
- FANUC SERVO MOTOR β*i* series (I/O Link Option) Maintenance Manual

5 CONNECTION TO CNC PERIPHERALS

5.1 CONNECTION OF MDI UNIT

5.1.1 General

For this LCD–mounted type CNC, the controller, display unit, and MDI are connected in the unit, so a machine tool builder does not need to connect them. Therefore, this subsection shows the key layouts of various MDIs.

5.1.2 Key Layout of Separate–type MDI

Compact keys for lathe series (T series) (horizontal type)

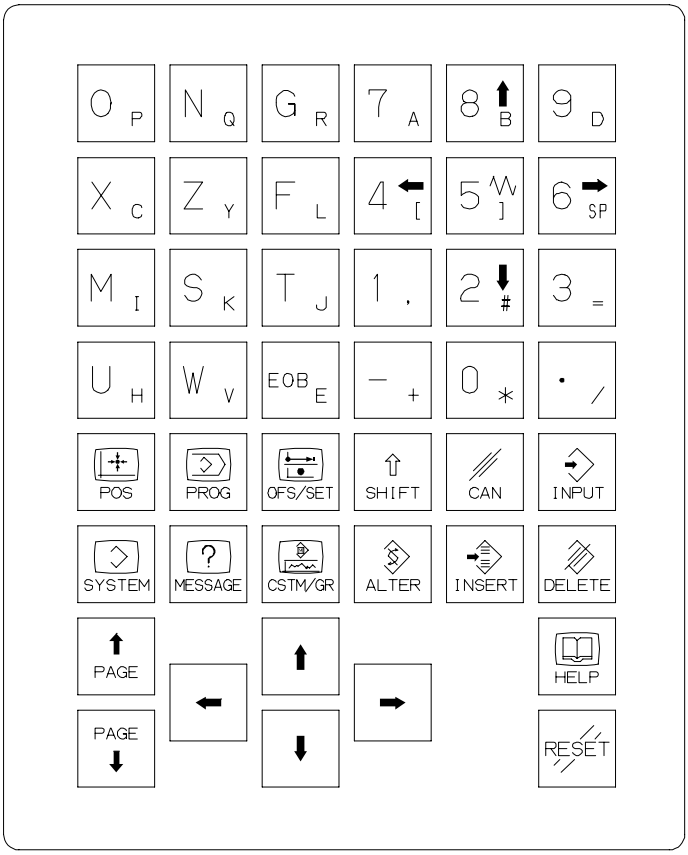

Compact keys for machine center series (M series) (horizontal type)

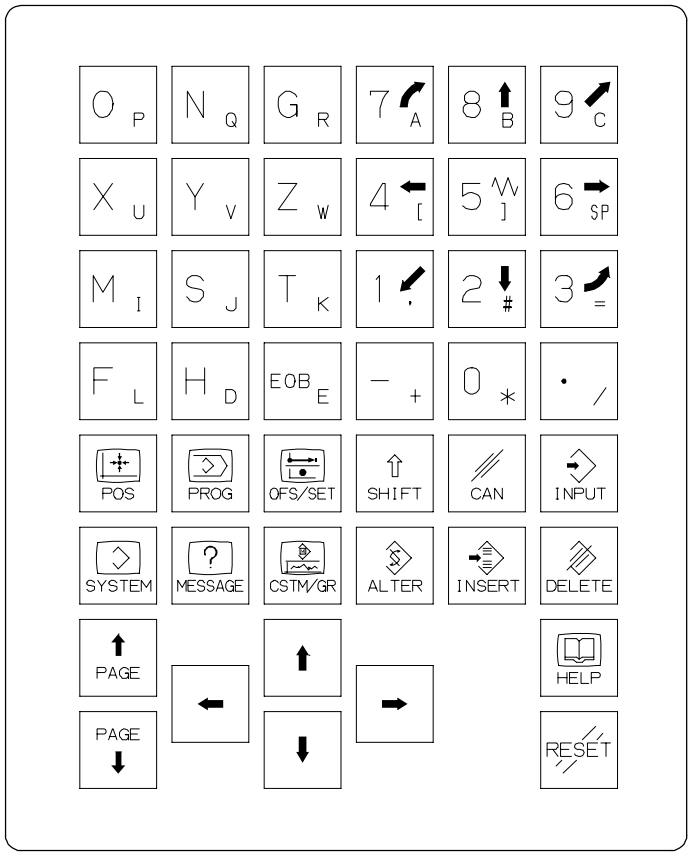

Standard keys for lathe series (T series) (vertical type)

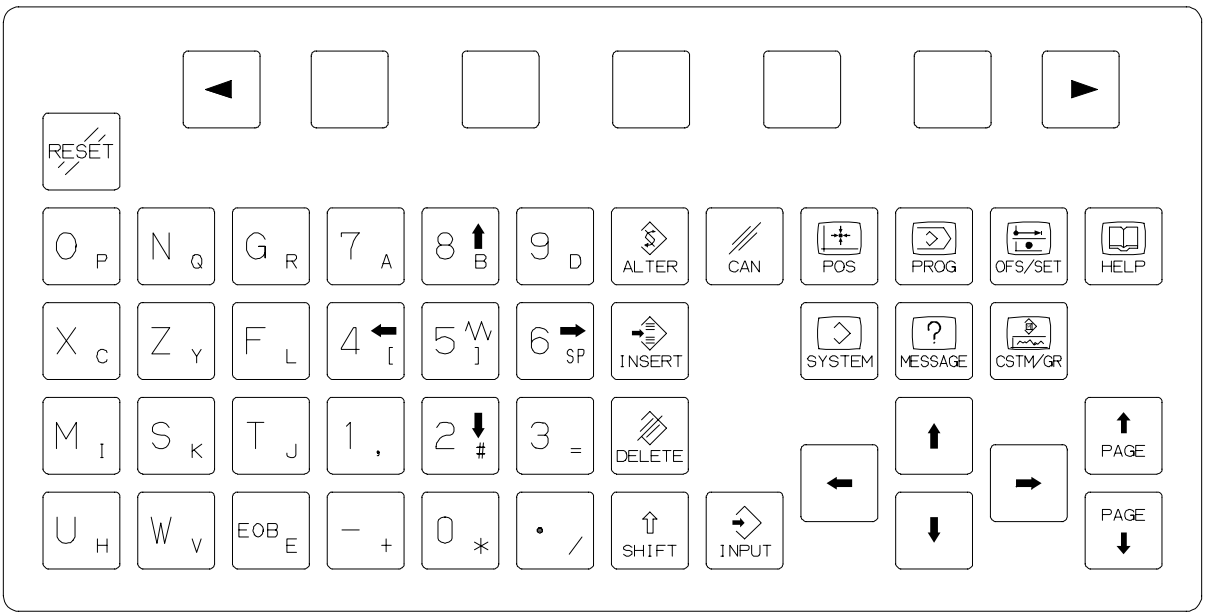

Standard keys for machine center series (M series) (vertical type)

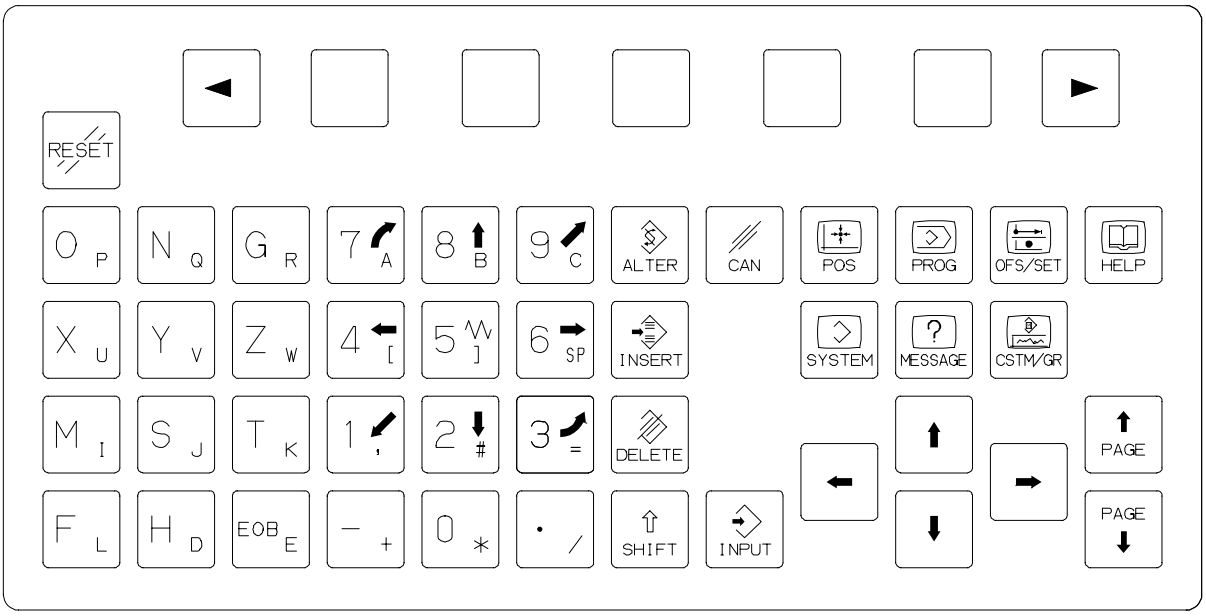

5.2 CONNECTION WITH INPUT/OUTPUT DEVICES

5.2.1 Overview

An input/output device is used to enter information such as CNC programs and parameters from an external device to the CNC, or to output information from the CNC to an external device.

Input/output devices include Handy FILE.
The interface of the input/output devices electrically conforms to RS–232–C, so that a connection can be made with a device that has an RS–232–C interface.

The tables below indicate the serial ports.

Port name	Interface location	
First channel (JD36A)	Main control unit	
Second channel (JD36B)	Main control unit	

5.2.2 Connecting I/O Devices

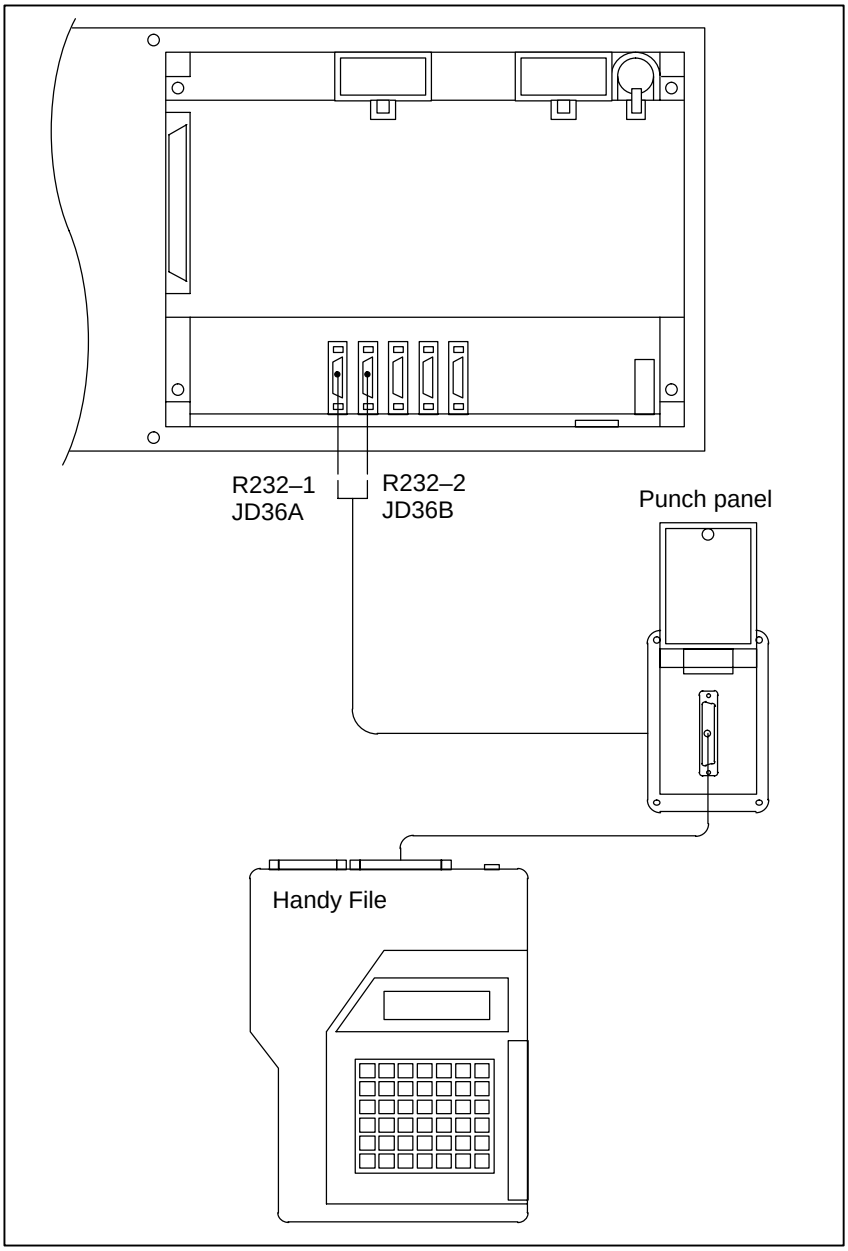

NOTE

This interface is the RS–232C interface on the CNC side.

This RS–232C interface on the CNC side can be used on the 0*i*–C/0*i* Mate–C only for the following purposes:

Ladder uploading or downloading via RS–232–C using FANUC–LADDER or FANUC–LADDER II
Ladder monitoring from an external PC using FANUC–LADDER II
DNC operation via RS–232–C, external I/O device control
Input/output of parameters and programs by using the CNC screen display function

5.2.3
RS–232–C Serial Port

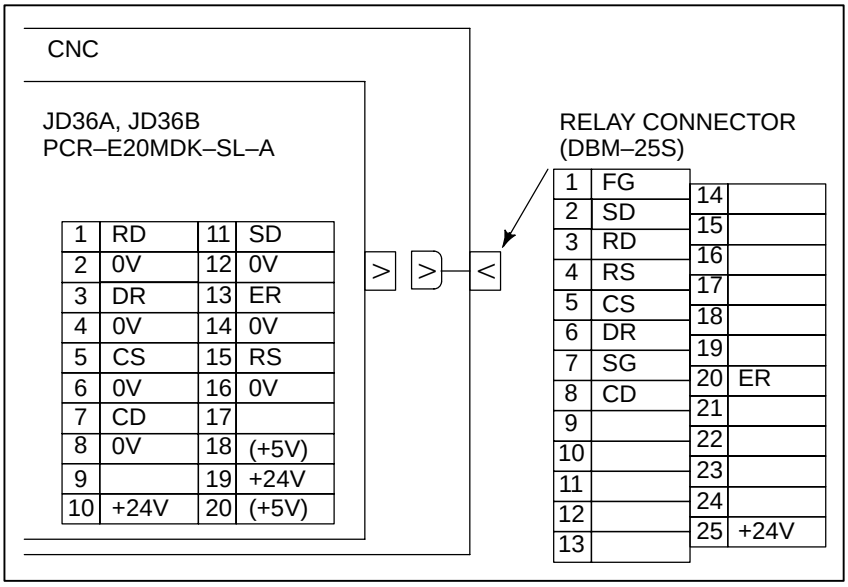

1	RD	11	SD
2	0V	12	0V
3	DR	13	ER
4	0V	14	0V
5	CS	15	RS
6	0V	16	0V
7	CD	17	
8	0V	18	(+5V)
9		19	+24V
10	+24V	20	(+5V)

1	FG	14	
2	SD	15	
3	RD	16	
4	RS	17	
5	CS	18	
6	DR	19	
7	SG	20	ER
8	CD	21	
9		22	
10		23	
11		24	
12		25	+24V
13			

NOTE

1 +24 V can be used as the power supply for FANUC RS–232–C equipment.

2 Do not connect anything to those pins for which signal names are not indicated.

3 Pins 18 and 20 (+5V) are provided for touch channel connection.

CABLE CONNECTION

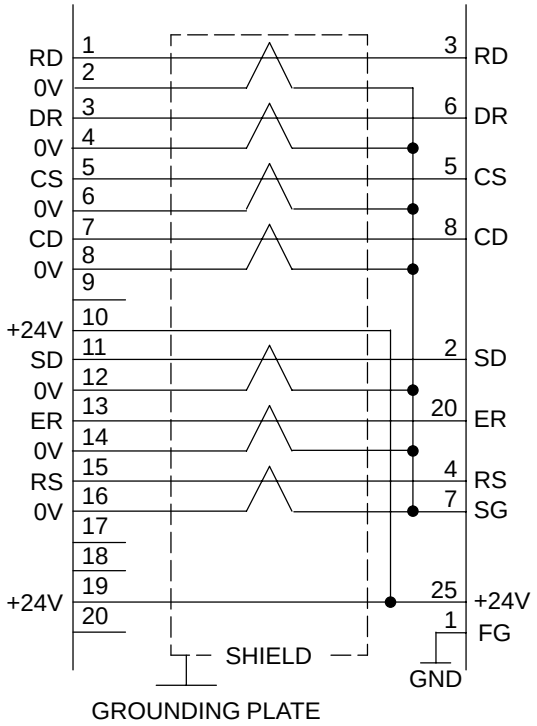

RECOMMENDED CABLE SPECIFICATION
A66L–0001–0284#10P (#28AWG × 10 pairs)
RECOMMENDED CABLE–SIDE CONNECTORS (JD36A, JD36B, JD5A, JD5B)
PCR–E20FA (Honda Tsushin Kogyo Co., Ltd.)
FI30–20S (Hirose Electric Co., Ltd.)
FCN–247J020–G/E (Fujitsu, Ltd.)
52622–2011 (Molex Japan Co., Ltd.)

RECOMMENDED CABLE SPECIFICATION (PUNCH PANEL)
For JD36A and JD36B
<Narrow width type>
A02B–0236–C191 (1 m)
A02B–0236–C192 (2 m)
A02B–0236–C193 (5 m)

NOTE

Do not connect anything to those pins for which signal names are not indicated.

5.2.4 RS–232–C Interface Specification

RS–232–C Interface signals

Generally signals as follows are used in RS–232–C interface.

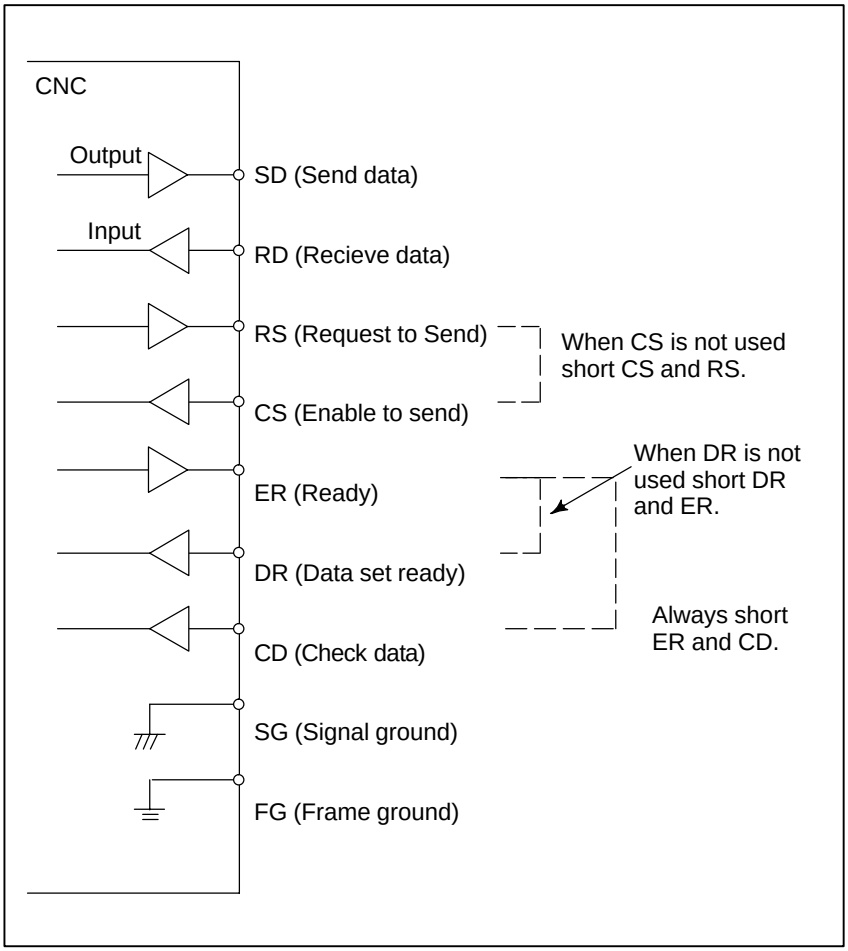

Fig. 5.2.4 (a) RS–232–C interface

Signal description of RS–232–C interface

Signal name	RS–232C circuit number	I/O	Description	
SD	103	Out-put	Sending data	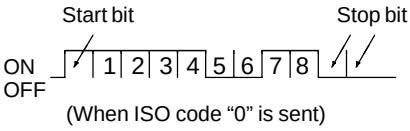
RD	104	Input	Receiving data	
RS	105	Input	Sending request	This signal is set to on when NC starts sending data and is turned off when transmission ends.
CS	106	Input	Sending permitted	When both this signal and the DR signal are set, the NC can send data. If external device processing is delayed by a punching operation, etc., NC data sending can be stopped by turning off this signal after sending two characters, including the data being sent currently. If this signal will not be used, make sure to strap this signal circuit to the RS signal circuit.
DR	107	Input	Data set ready	When external device is ready to operate, this signal is set. This signal should usually be connected to the signal indicating external device power supply being on. (ER signal of external device). See Note below. The NC transfers data when this signal is set. If the signals turned off during data transfer, alarm 086 is issued. If the DR signal will not be used, make sure to strap this signal circuit to the ER signal circuit.
ER	108.2	Out-put	NC ready to operation	This signal is set when the NC is ready to operate. External device should regard the SD signal as being significant when the ER signal is set.
CD	109	Input	Signal quality signal	Since this signal is not used in connections with external device, the signal circuit must be strapped, inside the connecting cable, to the ER signal circuit.
SG	102		Signal grounding	
FG	101		Frame grounding	

NOTE

Signal on/off state is defined as follows;

	–3V or lower	+3V or higher
Function	OFF	ON
Signal Condition	Marking	Spacing

Transmission Method of RS–232–C interface

Start–stop

Generally, two transmission methods are available at the serial interface. this CNC use the start–stop method. With this method, start and stop signals are output before and after each data bit.

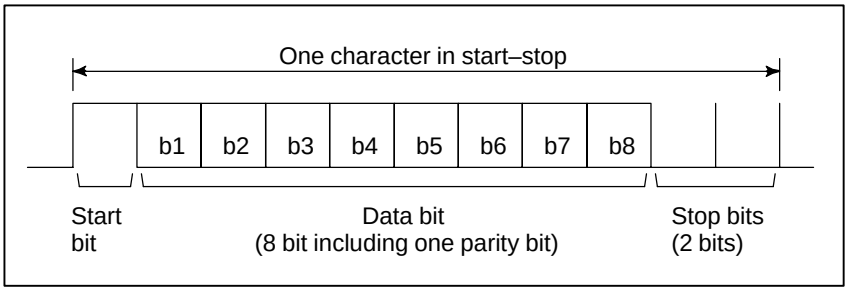

Codes

Transmission codes are as follows:

(i) EIA code and Control codes DC1 to DC4.

(ii) ISO code and Control codes DC1 to DC4 (Optional ISO code input is necessary.)

The connected external device must be able to recognize the following control codes, sent from NC.

Control code		8	7	6	5	4		3	2	1
DC1	Tape reader start				○		○			○
DC2	Tape punch designation				○		○		○	
DC3	Tape reader stop	○			○		○		○	○
DC4	Tape punch release				○		○	○		

NOTE
The listed control codes are used for both EIA and ISO.

In this interface, control codes DC1 to DC4 are used.

(a) NC can control external device by issuing codes DC1 to DC4.

(b) When external processing falls behind the pace of the NC signals (When NC issues data)

(i) External device can temporarily stop NC data output by using the NC's CS signal. Data output stops within two characters including a currently transmitting character when CS OFF signal is input to NC. When CS signal is turned on again, data transmission start.

(ii) If control code DC3 is input to NC, NC stops data output within ten characters. When control code DC1 is input to NC, NC starts sending data again.

(c) When the external device is equipped with an ISO/EIA converter, the external device must satisfy the specification shown in Table 5.2.4.

Table 5.2.4

ISO code										EIA code										Meaning	
Character	8	7	6	5	4		3	2	1	Character	8	7	6	5	4		3	2	1		
0			○	○		•				0			○			•					Numeral 0
1	○		○	○		•			○	1						•			○		Numeral 1
2	○		○	○		•		○		2						•		○			Numeral 2
3			○	○		•		○	○	3				○		•		○	○		Numeral 3
4	○		○	○		•	○			4						•	○				Numeral 4
5			○	○		•	○		○	5				○		•	○		○		Numeral 5
6			○	○		•	○	○		6				○		•	○	○			Numeral 6
7	○		○	○		•	○	○	○	7						•	○	○	○		Numeral 7
8	○		○	○	○	•				8					○	•					Numeral 8
9			○	○	○	•			○	9				○	○	•			○		Numeral 9
A		○				•			○	a		○	○			•			○		Address A
B		○				•		○		b		○	○			•		○			Address B
C	○	○				•		○	○	c		○	○	○		•		○	○		Address C
D		○				•	○			d		○	○			•	○				Address D
E	○	○				•	○		○	e		○	○	○		•	○		○	?	Address E
F	○	○				•	○	○		f		○	○	○		•	○	○			Address F
G		○				•	○	○	○	g			○	○		•	○	○	○		Address G
H		○			○	•				h		○	○		○	•					Address H
I	○	○			○	•			○	i		○	○	○	○	•			○		Address I
J	○	○			○	•		○		j		○		○		•			○		Address J
K		○			○	•		○	○	k		○		○		•		○			Address K
L	○	○			○	•	○			l		○				•		○	○		Address L
M		○			○	•	○		○	m		○		○		•	○				Address M
N		○			○	•	○	○		n		○				•	○		○		Address N
O	○	○			○	•	○	○	○	o		○				•	○	○			Address O
P		○		○		•				p		○		○		•	○	○	○		Address P
Q	○	○		○		•			○	q		○		○	○	•					Address Q
R	○	○		○		•		○		r		○			○	•			○		Address R
S		○		○		•		○	○	s			○	○		•		○			Address S
T	○	○		○		•	○			t			○			•		○	○		Address T
U		○		○		•	○		○	u			○	○		•	○				Address U
V		○		○		•	○	○		v			○			•	○		○	?	Address V
W	○	○		○		•	○	○	○	w			○			•	○	○			Address W
X	○	○		○	○	•				x			○	○		•	○	○	○		Address X
Y		○		○	○	•			○	y			○	○	○	•				?	Address Y
Z		○		○	○	•		○		z			○		○	•			○		Address Z
DEL	○	○	○	○	○	•	○	○	○	Del		○	○	○	○	•	○	○	○	＊	
NUL						•				Blank						•				＊	
BS	○				○	•				BS			○		○	•		○		＊	
HT					○	•			○	Tab			○	○	○	•	○	○		＊	
LF or NL					○	•		○		CR or EOB	○					•					
CR	○				○	•	○		○											＊	
SP	○		○			•				SP				○		•				＊	
%	○		○			•	○		○	ER					○	•		○	○		
(			○		○	•				(2–4–5)				○	○	•		○			
)	○		○		○	•			○	(2–4–7)		○			○	•		○			
+			○		○	•		○	○	+		○	○	○		•				＊	
–			○		○	•	○		○	–		○				•					
:			○	○	○	•		○													
/	○		○		○	•	○	○	○	/			○	○		•			○		
.			○		○	•	○	○		.		○	○		○	•		○	○		
#	○		○			•		○	○												
$			○			•	○														
&	○		○			•	○	○		&					○	•	○	○			
'			○			•	○	○	○											＊	
＊	○		○		○	•		○												＊	
,	○		○		○	•	○			,			○	○	○	•		○	○	＊	
;	○		○	○	○	•		○	○											＊	
<			○	○	○	•	○													＊	
=	○		○	○	○	•	○		○											＊	
>	○		○	○	○	•	○	○												＊	
?			○	○	○	•	○	○	○											＊	
@	○	○				•														＊	
”			○			•		○												＊	

NOTE

1 When the external device is equipped with an ISO/EIA converter, the following items must be noted in Table 5.2.4 (a).

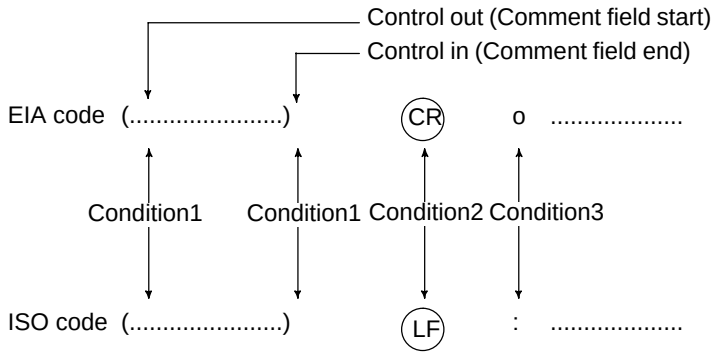

Condition1

Left parenthesis “(”of the ISO code punches holes at bits 2, 4 and 5 when used in the EIA code.
Right parenthesis “)”of the ISO code punches holes at bits 2, 4 and 7 when used in the EIA code.

Condition2

EIA code CR is LF in ISO code.

Condition3

EIA code O is : in ISO code.

2 Control codes DC1 to DC4 are transmission codes output from the NC. So they need not to be punched on the NC tape.

(iii) Transmission rate (Baud rate)

The transmission rate (Baud rate) is the number of bits transferred per second.

The following baud rates are available depending on the system parameter.

50, 100, 110, 150, 200, 300, 600, 1200, 2400, 4800, 9600.

(Example)

Baud rate : 110

When using one start bit and two stop bits (totalling 11 bits per character):

$$\text{Transmission characters/second} = \frac{110}{11} = 10 \text{ characters/second}$$

(Max.)

(iv) Cable length

The cable length depends on the external device type. Consult with the device manufacturers for actual connecting cable lengths.

When cable A (A66L–0001–0041) is used, cable length is as follows by the specification of NC.

for RS–232C	100m or less	... 4800 bauds or less
	50m or less	... 9600 bauds or less

Time chart when the NC receives data (Read into memory)

(1) NC outputs DC1.
(2) The I/O device starts sending data upon receiving DC1.
(3) NC sends DC3 when NC processing is delayed.
(4) The I/O device stops sending data to NC after receiving DC3.
The device may send up to 10 characters after receiving DC3. If it sends more than 10 characters, alarm 087 will occur.
(5) NC reissues DC1 upon completing delayed processing.
(6) The I/O device restarts data output upon receiving the DC1 code (the data must be the next data to the preceding.)
(7) NC sends DC3 upon completing data read.
(8) The I/O device stops sending data.

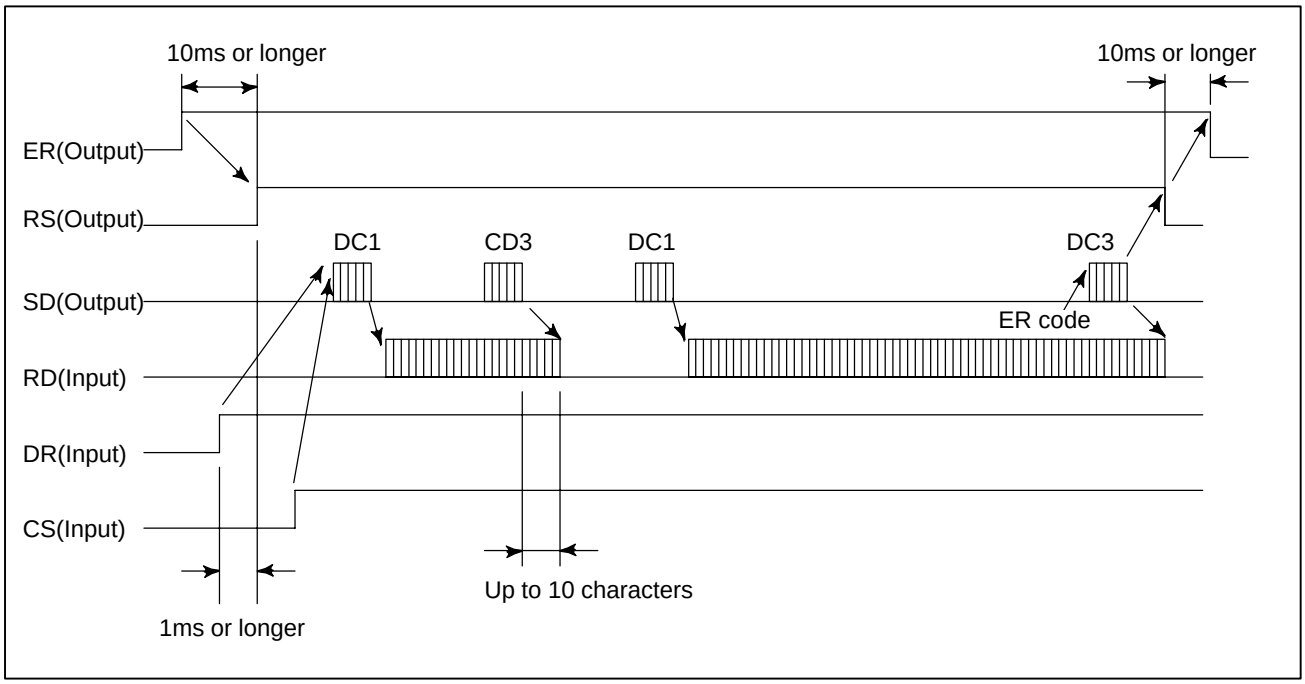

Time chart when the NC send data (Punch out)

(1) NC output DC2.

(2) NC outputs punch data in succession.

(3) When data processing is delayed at the I/O device.

(a) Data output stops within two characters including a currently transmitting character when CS signal is turned off.
When CS signal is turned on again, data transmission starts. (See Fig. 5.2.4 (b))

(b) If control code DC3 is input to NC, NC stops data output within ten characters. When control code DC1 is input to NC, NC starts sending data again. (See Fig. 5.2.4 (c))

(4) The NC starts sending the next data if the CS signal is turned on after the I/O device completes data processing.

(5) The NC issues DC4 upon completing data output.

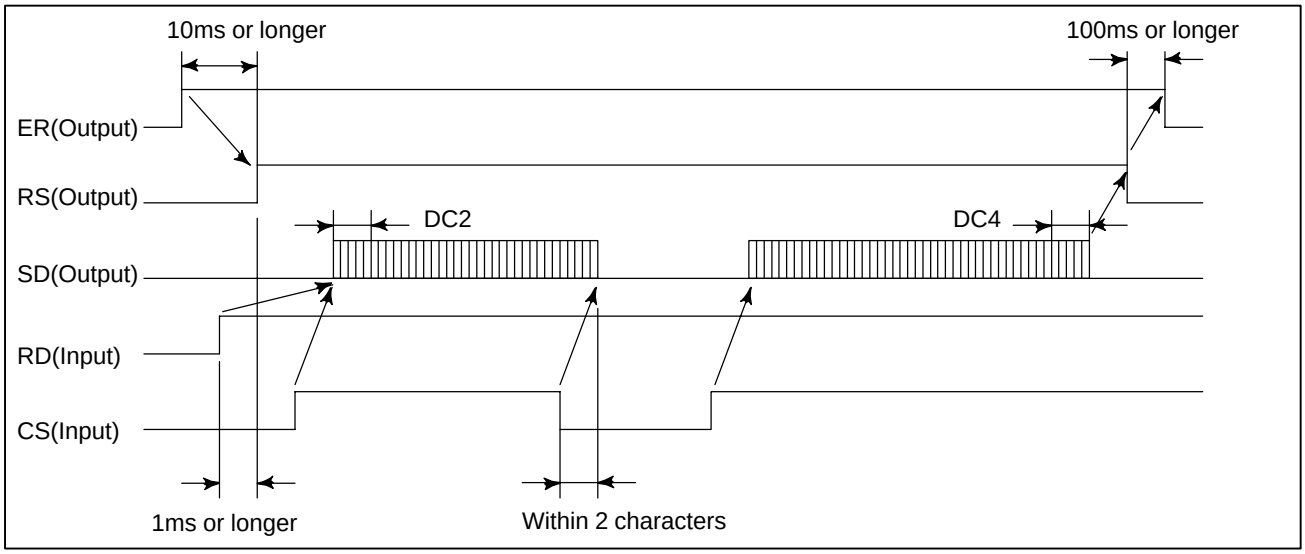

Fig. 5.2.4 (b)

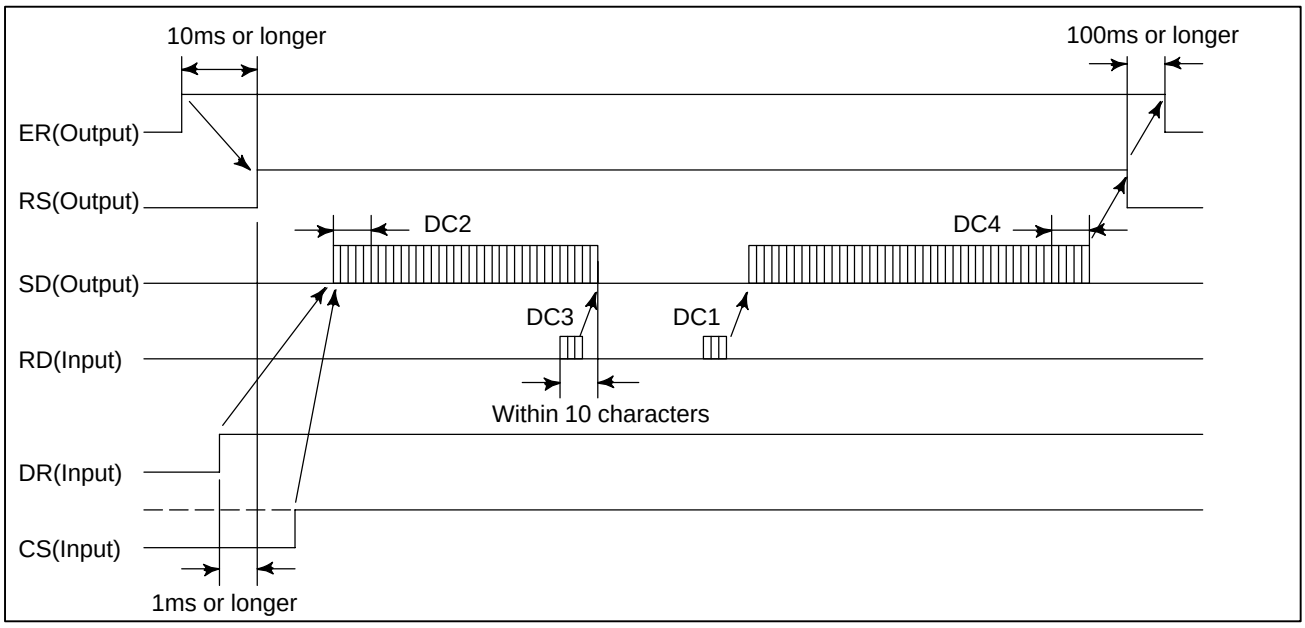

Fig. 5.2.4 (c)

Connection between RS–232–C interface and I/O device

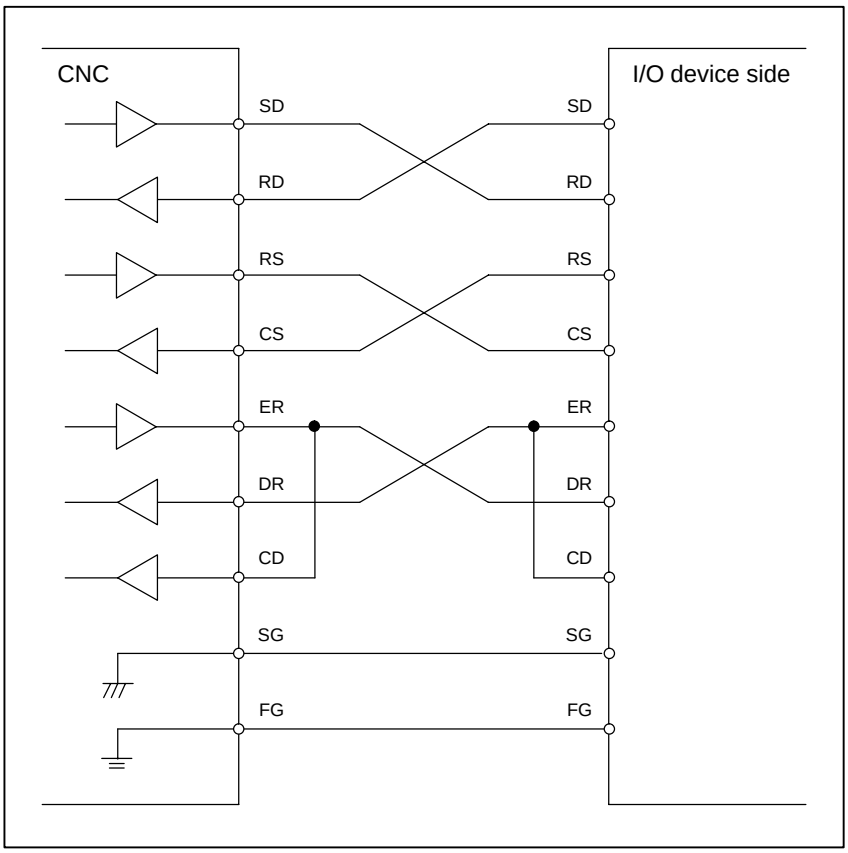

- When the ER signal and the DR signal are not used for a handshake, the following connection is used.

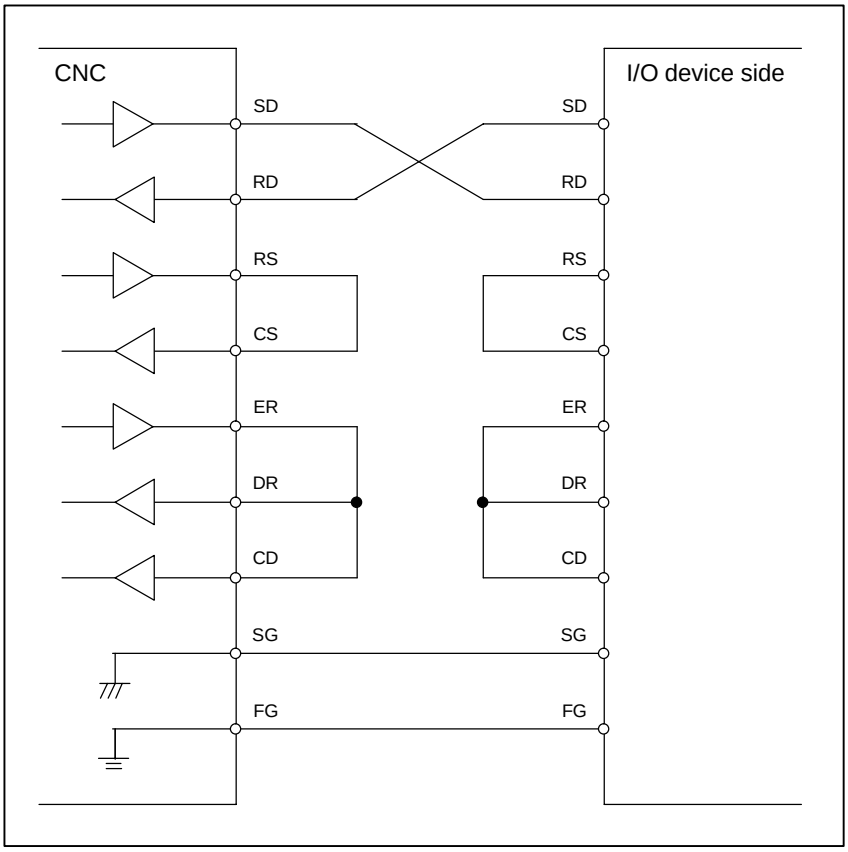

Prepare the cable with I/O device as follows :

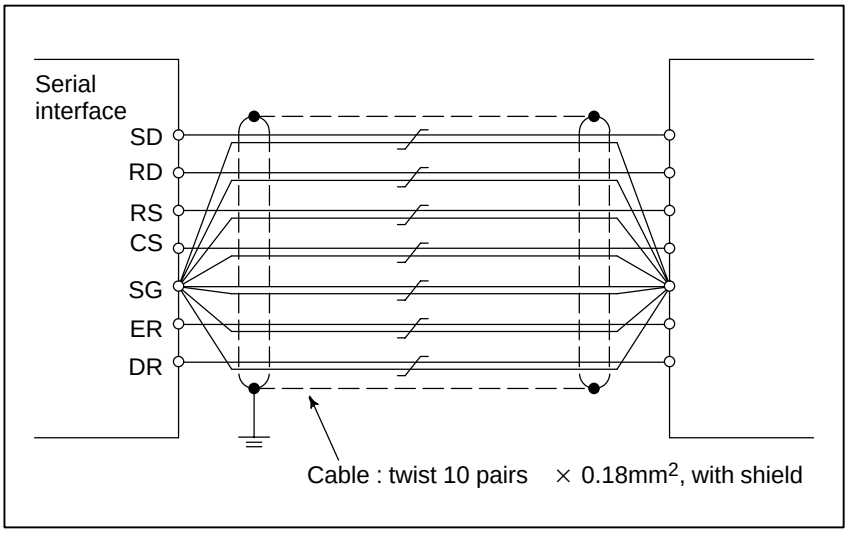

5.2.5 FANUC Handy File Connection

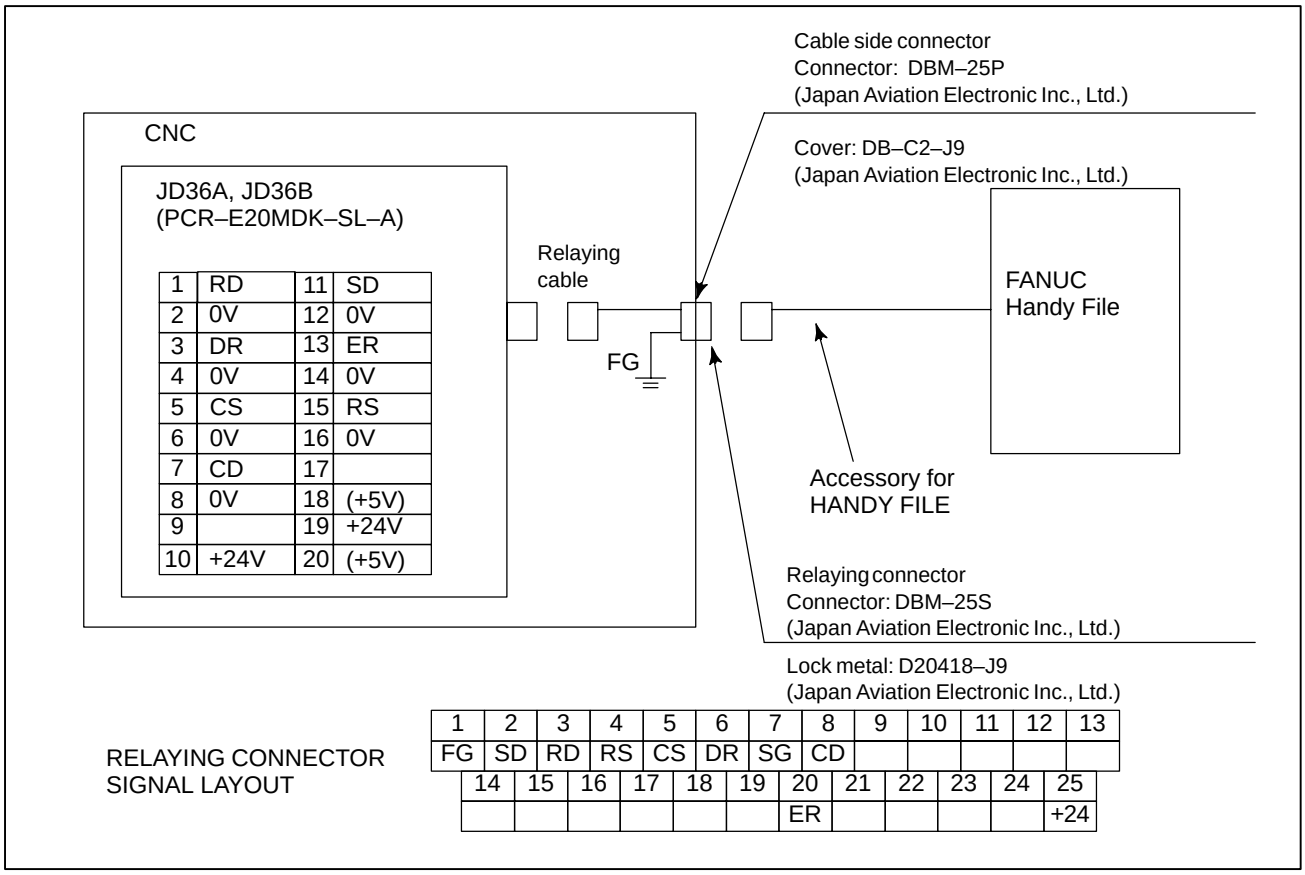

1	RD	11	SD
2	0V	12	0V
3	DR	13	ER
4	0V	14	0V
5	CS	15	RS
6	0V	16	0V
7	CD	17	
8	0V	18	(+5V)
9		19	+24V
10	+24V	20	(+5V)

1	2	3	4	5	6	7	8	9	10	11	12	13
FG	SD	RD	RS	CS	DR	SG	CD					

14	15	16	17	18	19	20	21	22	23	24	25
						ER					+24

NOTE

1 Machine tool builder shall furnish relay connector and relay cable.
2 Use a totally shielded cable for the signal cable.
  Recommended cable specification: A66L–0001–0284#10P
3 Open all terminals other than illustrated.
4 Set suitable parameters on reader/puncher interface for FANUC Handy File. The baud rate is 4800 baud in standard.
5 Only one FANUC Handy File unit can be connected to a system. If FANUC Handy File units are connected to multiple channels, a power capacity of +24V will be exceeded.
6 Make no connections to pins 18 (+5V) and 20 (+5V).

5.3 CONNECTING THE HIGH–SPEED SKIP (HDI)

5.3.1 General

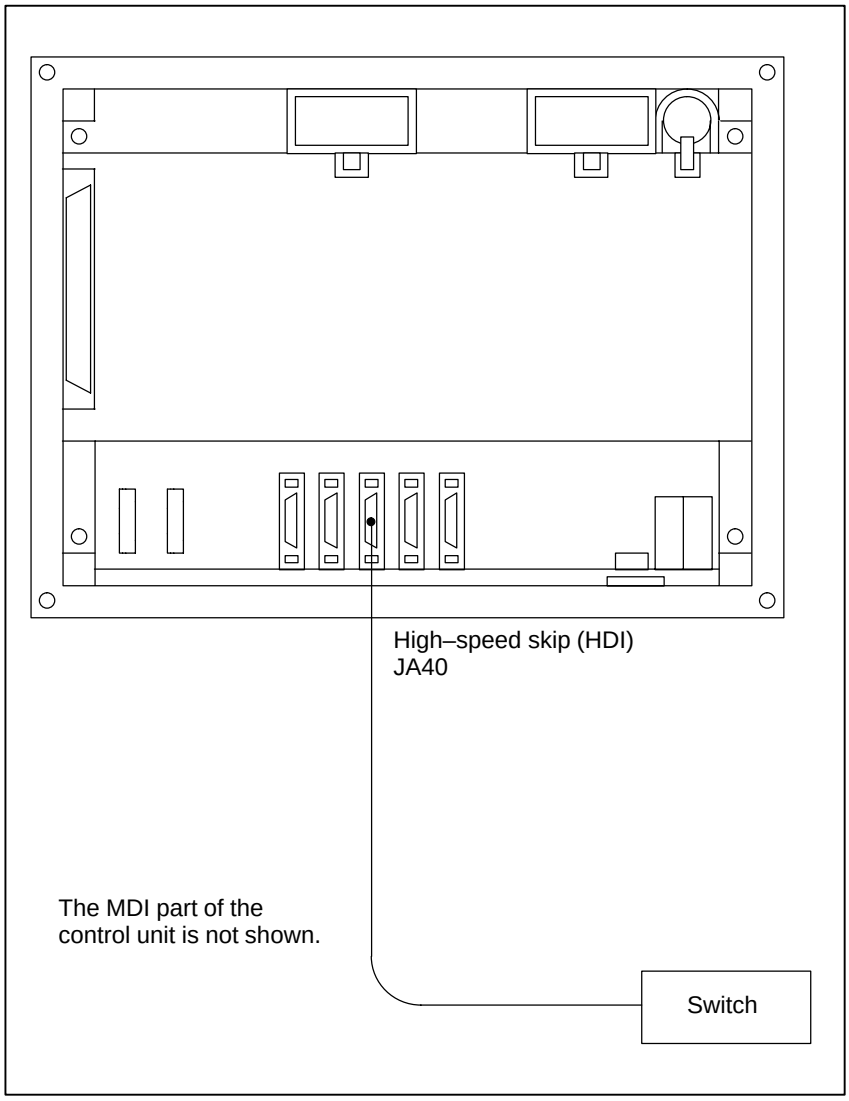

5.3.2 Connection to the High–speed Skip (HDI)

CNC

JA40

PCR–E20MDK–SL–A

1	HDI0	11	
2	0V	12	
3		13	
4		14	
5	(ES)0V	15	
6		16	
7	(SVC)	17	
8	(ENB1)	18	
9	(ENB2)	19	
10		20	

Signals inside ( ) are used with the analog spindle.

NOTE
Leave connector pins unconnected if they are not intended for use.

Cable connections

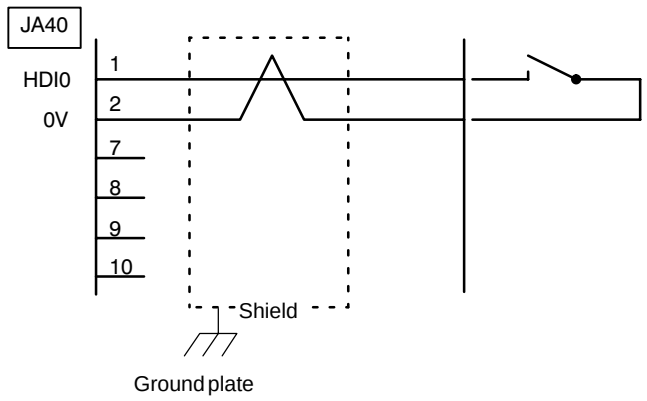

Recommended cable connector:
PCR–E20FA (Honda Tsushin Kogyo)
FCN–247J020–G/E (Fujitsu)
52622–2011 (Molex Japan)

5.3.3 Input Signal Rules for the High–speed Skip (HDI)

Circuit configuration

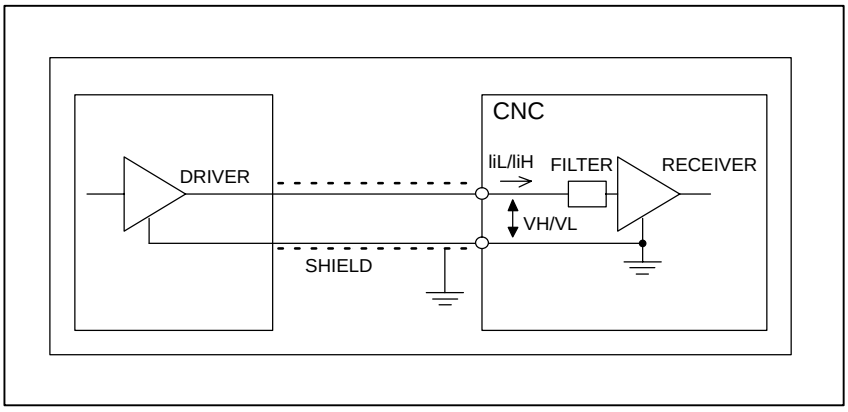

Absolute maximum rating
Input voltage range Vin: –3.6 to +13.6 V
Input characteristics

Unit	Symbol	Specification	Unit	Remark
High level input voltage	VH	3.6 to 11.6	V	
Low level input voltage	VL	0 to 1.0	V	
High level input current	IiH	2 max	mA	Vin=5 V
		11 max	mA	Vin = 10 V
Low level input current	IiL	–8.0 max	mA	Vin = 0 V
Input signal pulse duration		20 min	μ s	
Input signal delay or variations		0.02(max)	ms	

NOTE

1 The plus (+) sign of IiH/IiL represents the direction of flow into the receiver. The minus (–) sign of IiH/IiL represents the direction of flow out of the receiver.
2 The high–speed skip signal is assumed to be 1 when the input voltage is at the low level and 0 when it is at the high level.
3 The input level for the CNC receiver is high when the circuit is open. So, the input level for the external driver must be low.

6 SPINDLE CONNECTION

The figure below shows the spindle–related connections. Note that the number of connectable spindles depends on the model. So, see the tables that follow the figure below.

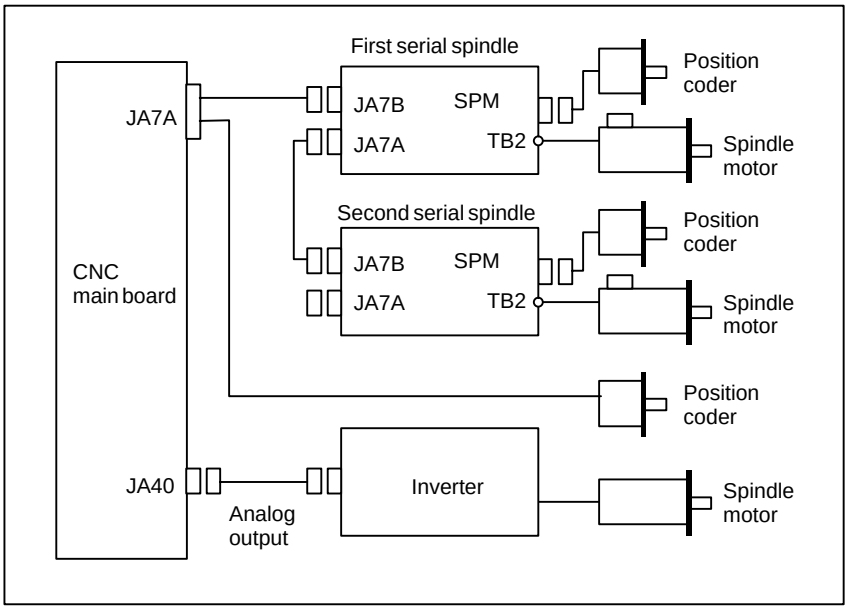

	Series 0*i*				Series 0*i* Mate	
First serial spindle	○	○		○	○	
Second serial spindle		○				
Analog output			○	○		○
Position coder			○			○

6.1 SERIAL SPINDLE

6.1.1 Connection of One to Two Serial Spindles

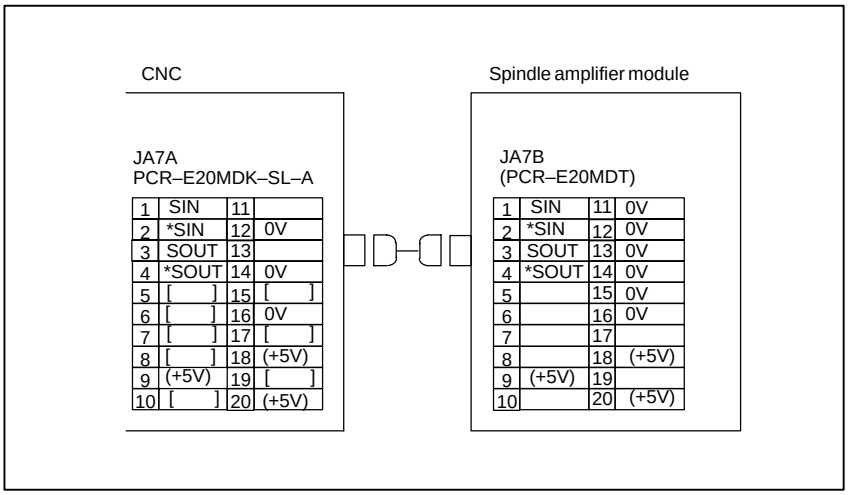

NOTE

1 When an optical cable is used for connection between the NC and a spindle amplifier, the +5V signals indicated in parentheses are used to feed power to the optical I/O adapter. Do not connect these signals when an optical cable is not used. The signals in brackets ([ ]) are used when a position coder is used with an analog spindle is used.

2 The second serial spindle is connected as a branch from the spindle amplifier module.

3 The αi spindle cannot be connected to the conventional optical I/O link adapter. The optical adapter (A13B–0154–B003) must be used instead.

Cable connection

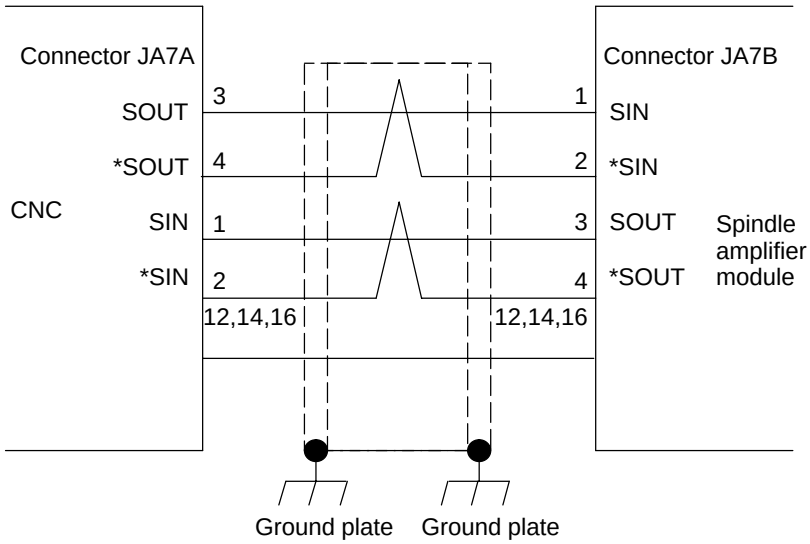

Recommended cable connector:
PCR–E20FA (manufactured by Honda Tsushin Kogyo)
FCN–247J020–G/E (manufactured by Fujitsu)
52622–2011 (manufactured by Molex Japan)

Recommended wire specification:
A66L–0001–0284#10P (#28AWG × 10 pairs)

NOTE

In any of the following cases, make a connection via an optical fiber cable by using an optical I/O link adapter:

- When the cable is 20 m or longer
- When the power magnetics cabinet containing a spindle amplifier cannot be connected with the operator's panel cabinet containing a CNC control unit via a ground wire with a cross–sectional area of 5.5 mm^2 or more
- When the cable is subject to significant noise. For example, when there is a strong electromagnetic noise source such as a welding machine near the cable, or when the cable runs in parallel with a power line or power magnetics cable that can generate noise.

6.2 ANALOG SPINDLE INTERFACE

CNC

JA40
PCR–E20MDK–SL–A

1	( )	11	( )
2	(0V)	12	
3	( )	13	( )
4		14	
5	ES	15	( )
6	( )	16	
7	SVC	17	( )
8	ENB1	18	
9	ENB2	19	( )
10		20	

Signal Name	Description
SVC, ES	Spindle command voltage and common line
ENB1, ENB2	Spindle enable signal (Note 1)

CABLE CONNECTION

ANALOG SPINDLE SERVO UNIT OR INVERTER

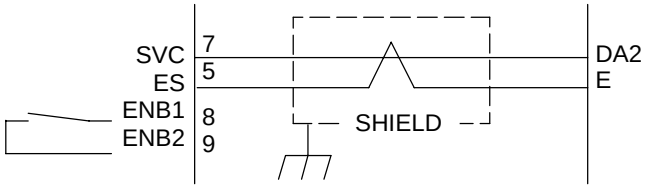

GROUNDING PLATE

RECOMMENDED CABLE–SIDE CONNECTOR
PCR–E20FA (Honda Tsushin Kogyo Co., Ltd.)
FCN–247J020–G/E (Fujitsu, Ltd.)
52622–2011 (Molex Japan Co., Ltd.)
RECOMMENDED CABLE SPECIFICATION:
A66L–0001–0284#10P (#28AWG × 10 pairs)

NOTE

1 Signals ENB1 and ENB2 turn on when the spindle command voltage is effective. These signals are used when the FANUC Analog Spindle Servo Unit is used.

2 The analog output ratings are as follows:
   Output voltage: ±10 V
   Output current: 2 mA (maximum)
   Output impedance: 100 ohms

3 The parenthesized signals are used for the high–speed skip function (HDI).

6.3 POSITION CODER INTERFACE

CNC

JD7A
PCR–E20MDK–SL–A

1	( )	11	
2	( )	12	0V
3	( )	13	
4	( )	14	0V
5	PA	15	SC
6	⁎PA	16	0V
7	PB	17	⁎SC
8	⁎PB	18	+5V
9	+5V	19	( )
10	( )	20	+5V

Signal Name	Description
SC, ⁎SC	Position coder phase C signals
PA, ⁎PA	Position coder phase A signals
PB, ⁎PB	Position coder phase B signals
SOUT, ⁎SOUT SIN, ⁎SIN	Serial spindle signals (Note)

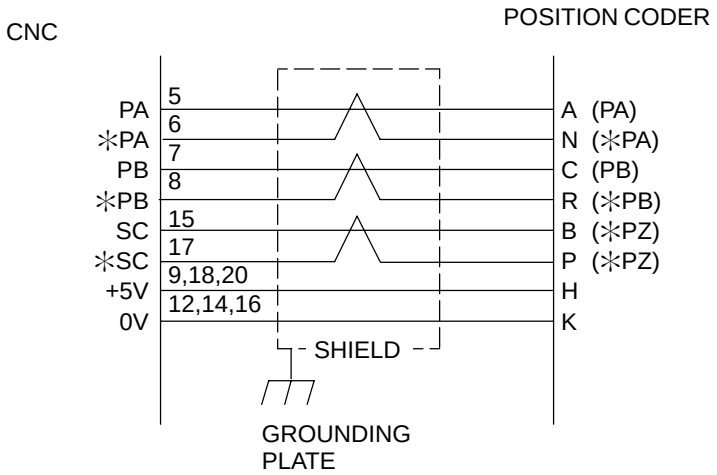

RECOMMENDED CABLE–SIDE CONNECTOR
PCR–E20FA (Honda Tsushin Kogyo Co., Ltd.)
FCN–247J020–G/E (Fujitsu, Ltd.)
52622–2011 (Molex Japan Co., Ltd.)
RECOMMENDED CABLE SPECIFICATION:
A66L–0001–0286 (#20AWG × 6 + #24AWG × 3),
MAX. LENGTH 20 m

NOTE

1 The signals for a serial spindle are parenthesized. These signals are not used for an analog spindle.

2 As the connector on the cable side, the solder–type 15–pin connector (FI40B–2015S, or conventional FI40–2015S) manufactured by Hirose Electric cannot be used.

7 SERVO INTERFACE

7.1 CONNECTION TO THE SERVO AMPLIFIERS

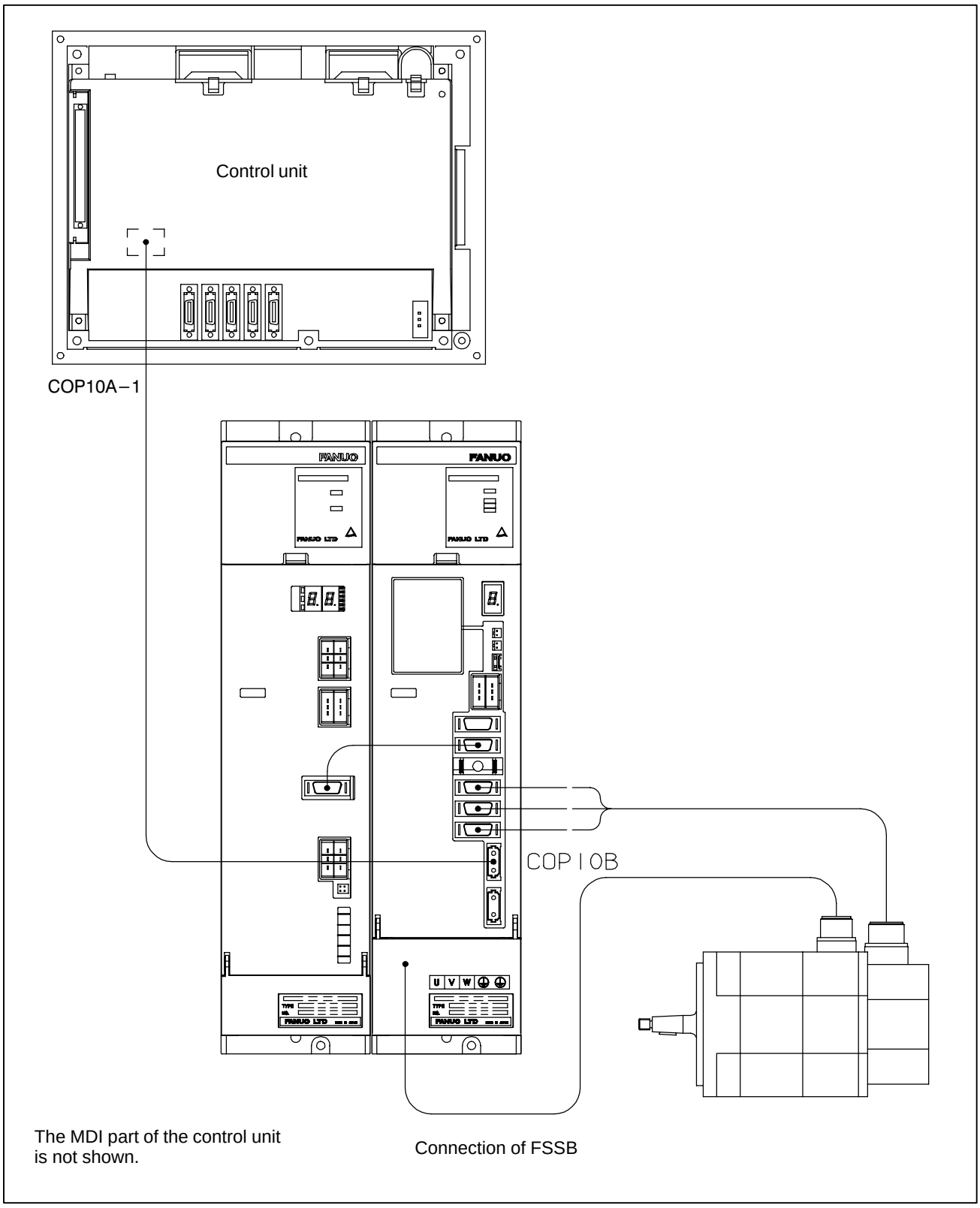

7.1.1 General

This chapter describes how to connect the servo units to the Series 0*i*/0*i* Mate. For details of the connection of the Servo amplifier, refer to the each servo amplifier manual.

7.1.2 Interface to the Servo Amplifiers

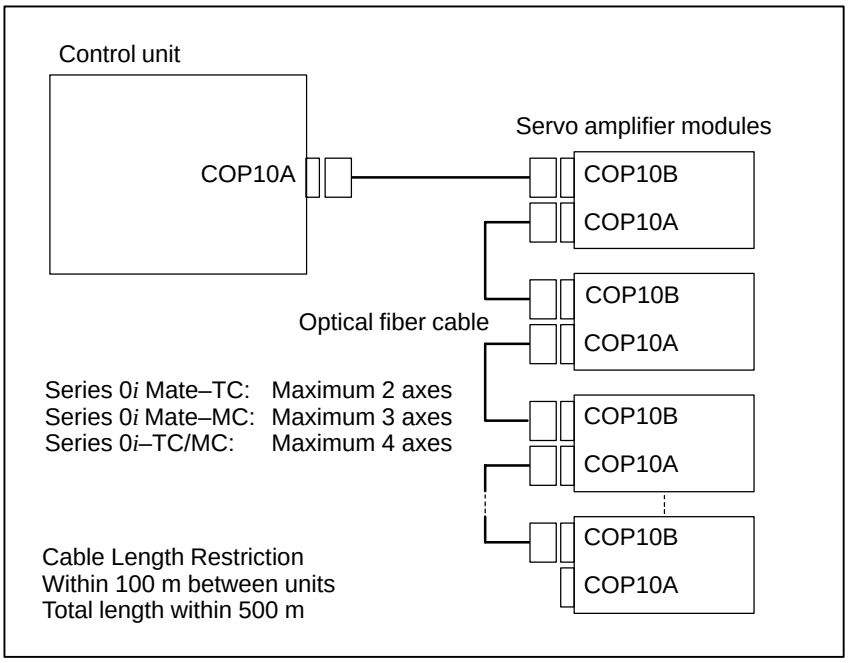

The connection between the CNC control unit and the servo amplifiers should use only one optical fiber cable, regardless of the number of controlled axes. See APPENDIX D for details on the optical fiber cable.

In the control unit, the COP10A connector is placed on the servo card installed on the main board.

7.1.3 Separate Detector Interface

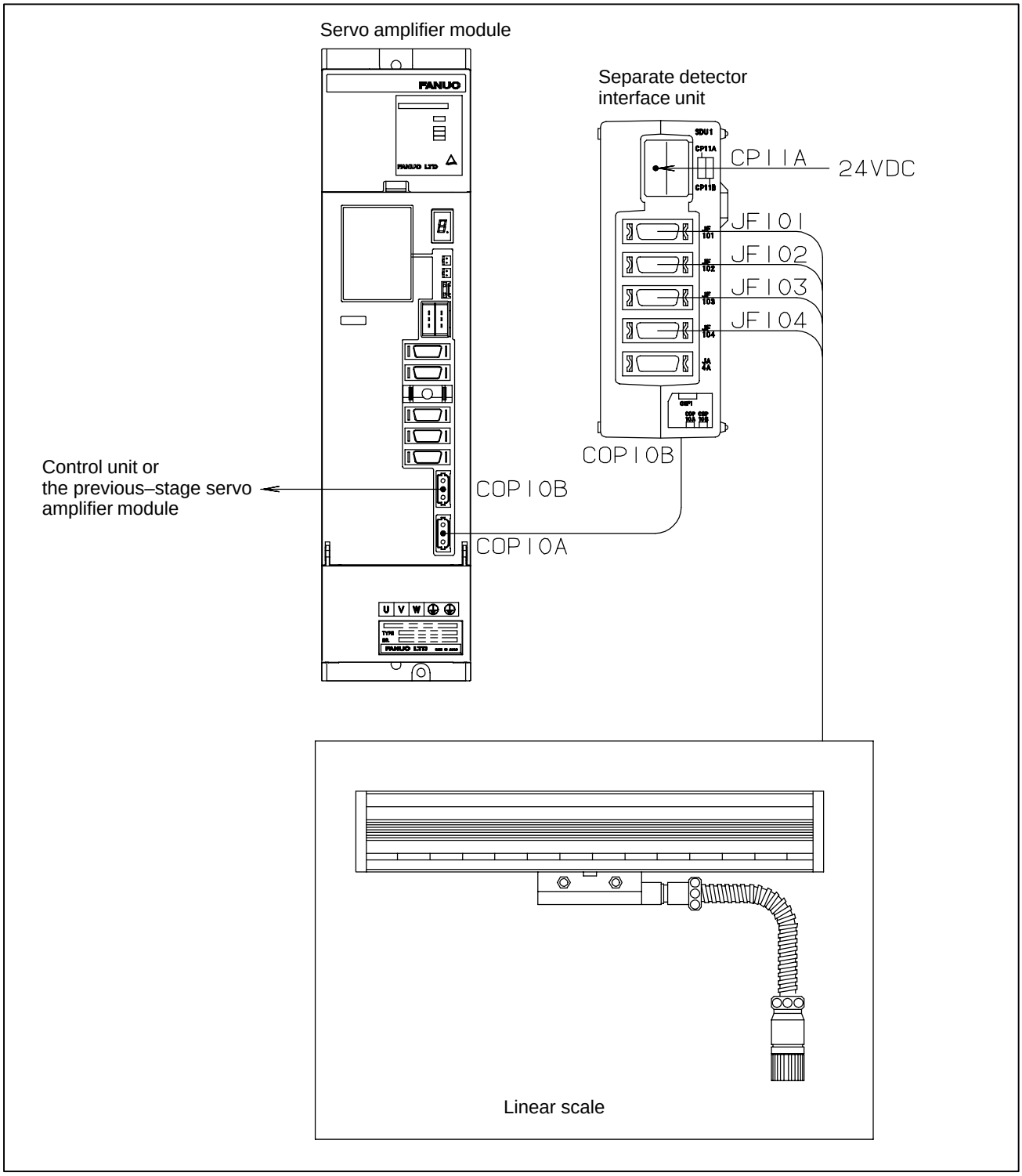

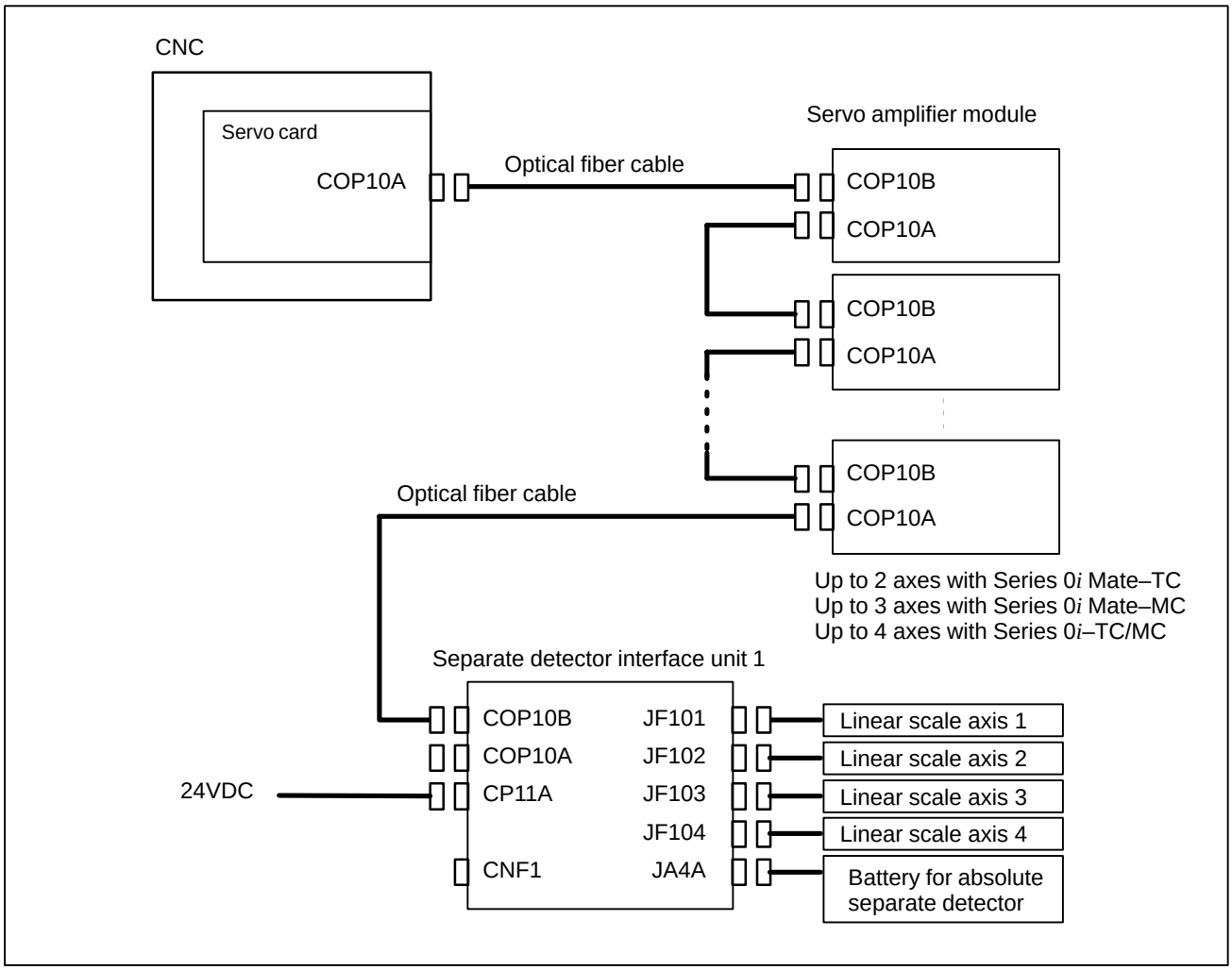

When a separate pulse coder or linear scale is used, a separate detector interface unit, as shown above, is required. The separate detector interface unit should be connected to the CNC control unit through an optical fiber cable, as one of the units on the servo interface (FSSB). Although the above figure shows the separate detector interface connected in the final stage of the FSSB line, it can also be connected, at the nearest location, to the CNC control unit. Or, it can be installed between two servo amplifier modules.

7.1.4 Separate Detector Interface Unit Specification

The interface unit can feed 0.35 A (5 V) to each separate detector.

Item	Specification
Power supply capacity	Voltage 24 VDC ±10% Current 0.9 A (basic unit only) 1.5 A (basic unit + expansion unit)
Ordering information	A02B–0236–C205 (basic)
Method of installation	An interface unit can be installed by using screws or a DIN rail.

7.1.5 Connection of Power Supply

Power to the separate detector interface unit should be supplied from an external 24 V DC power supply.
Extended units are powered by the basic unit.

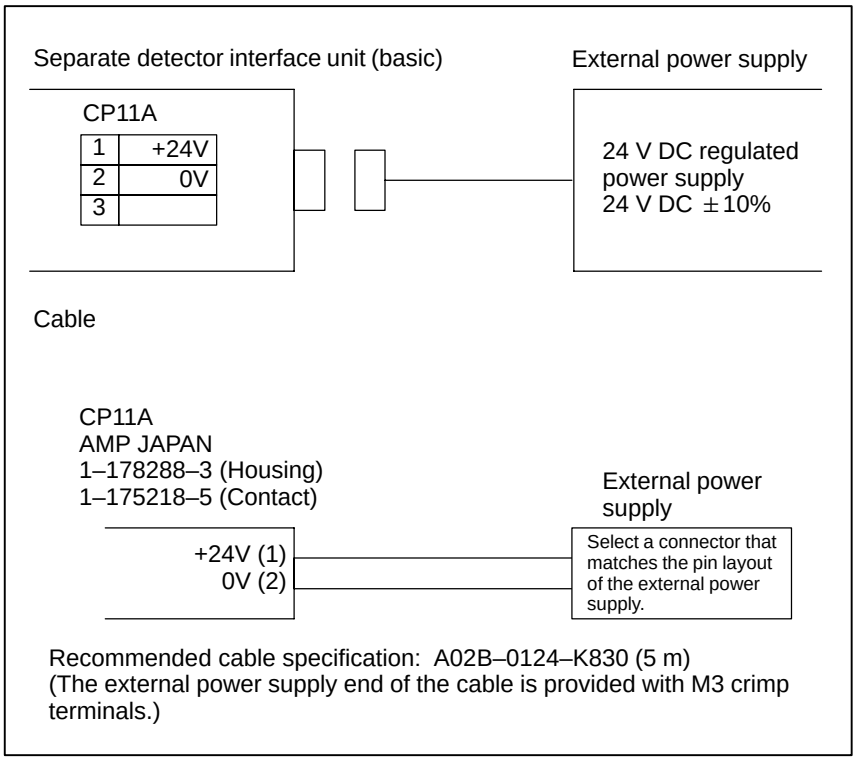

The 24 V DC input to CP11A can be output at CP11B for use in branching. The connection of CP11B is identical to that of CP11A. In this case, the power supplied to CP11A should be equal to the sum of the rating of the separate detector interface unit and that of the units after CP11B.

7.1.6 Linear Scale Interface (Parallel Interface)

Separate detector interface unit

JF101 to JF104
(PCR–EV20MDT)

1	PCA	11	
2	*PCA	12	0V
3	PCB	13	
4	*PCB	14	0V
5	PCZ	15	
6	*PCZ	16	0V
7	(+6V)	17	
8	(REQ)	18	+5V
9	+5V	19	
10		20	+5V

Linear scale

+6V and REQ are for separate absolute pulse coders.

Cable wiring

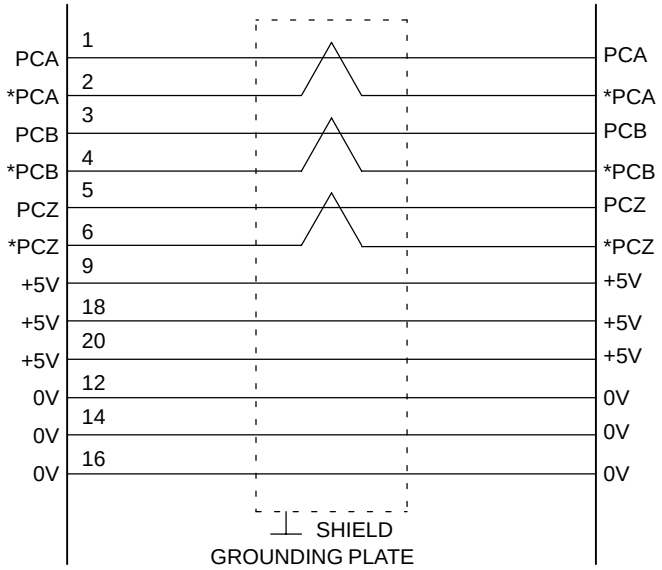

RECOMMENDED CABLE MATERIAL

A66L–0001–0286 (#20AWG × 6 + #24AWG × 3–pair)

Recommended connectors:
PCR–E20FA (Honda Tsushin Kogyo)
FI30–20S (Hirose Electric)
FCN–247J020–G/E (Fujitsu)
52622–2011 (Molex)
FI40B–2015S (Hirose Electric)

NOTE

The +5V signals above can be used to feed power to the linear scales. The supply current per linear scale is 0.35 A maximum.

Minimum tolerance to 5 V: 4.95 V for main unit and 4.9 V for expanded section

7.1.7 Separate Type Pulse Coder Interface (Parallel Interface)

- **For absolute detector**

Separate detector interface unit

JF101 to JF104
(PCR–EV20MDT)

1	PCA	11	
2	*PCA	12	0V
3	PCB	13	
4	*PCB	14	0V
5	PCZ	15	
6	*PCZ	16	0V
7	+6V	17	
8	REQ	18	+5V
9	+5V	19	
10		20	+5V

Separate detector

Pulse coder
(MS3102A–22–14P)

A	PCA	B	*PCA	C	PCB	D	*PCB
E	PCZ	F	*PCZ	G		H	
J		K		L	+5V	M	0V
N	SHLD	P		R		S	REQ
T	+6VA	U	0VA	V			

MS3106B22–14S

Cable wiring

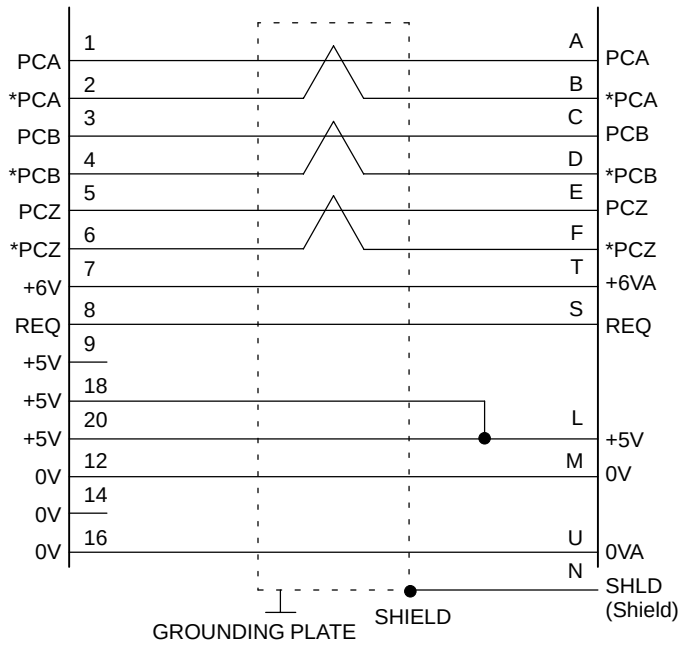

RECOMMENDED CABLE MATERIAL
A66L–0001–0286 (#20AWG × 6 + #24AWG × 3–pair)

Recommended connectors:
PCR–E20FA (Honda Tsushin Kogyo)
FI30–20S (Hirose Electric)
FCN–247J020–G/E (Fujitsu)
52622–2011 (Molex)
FI40B–2015S (Hirose Electric)

NOTE

The +5V signals above can be used to feed power to linear scales. The supply current per linear scale is 0.35 A maximum.
Minimum tolerance to 5 V: 4.95 V for main unit and 4.9 V for expanded section

(Parallel interface)

- **For incremental detector**

Separate detector interface unit

JF101 to JF104
(PCR–EV20MDT)

1	PCA	11	
2	*PCA	12	0V
3	PCB	13	
4	*PCB	14	0V
5	PCZ	15	
6	*PCZ	16	0V
7	+6V	17	
8	(REQ)	18	+5V
9	+5V	19	
10		20	+5V

Separate detector

Pulse coder
(MS3102A–20–29P)

A	PCA	B	PCB	C	+5V	D	*PCA
E	*PCB	F	PCZ	G	*PCZ	H	SHLD
J	+5V	K	+5V	L		M	
N	0V	P	0V	R		S	
T	0V						

MS3106B20–29SW
REQ is not used.

Cable wiring

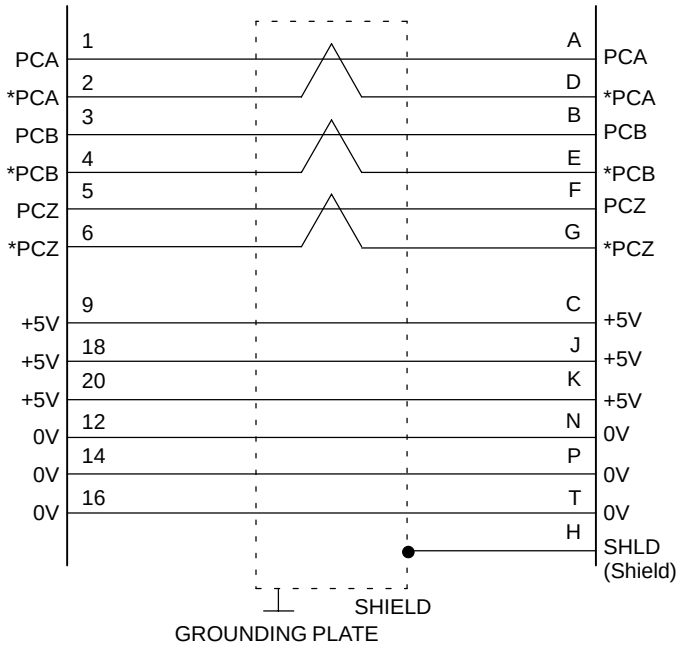

RECOMMENDED CABLE MATERIAL
A66L–0001–0286 (#20AWG × 6 + #24AWG × 3–pair)

Recommended connectors:
PCR–E20FA (Honda Tsushin Kogyo)
FI30–20S (Hirose Electric)
FCN–247J020–G/E (Fujitsu)
52622–2011 (Molex)
FI40B–2015S (Hirose Electric)

NOTE

The +5V signals above can be used to feed power to linear scales. The supply current per linear scale is 0.35 A maximum.
Minimum tolerance to 5 V: 4.95 V for main unit and 4.9 V for expanded section

Connection to a detector made by another manufacturer (Serial interface)

Separate detector interface unit

JF101 to JF108
(PCR–EV20MDT)

1	SD	11	
2	*SD	12	0V
3		13	
4		14	0V
5	REQ	15	
6	*REQ	16	0V
7	+6V	17	
8		18	+5V
9	+5V	19	
10		20	+5V

Detector made by another manufacturer

The +6V signal is for an absolute–position detector requiring battery backup.

Cable wiring

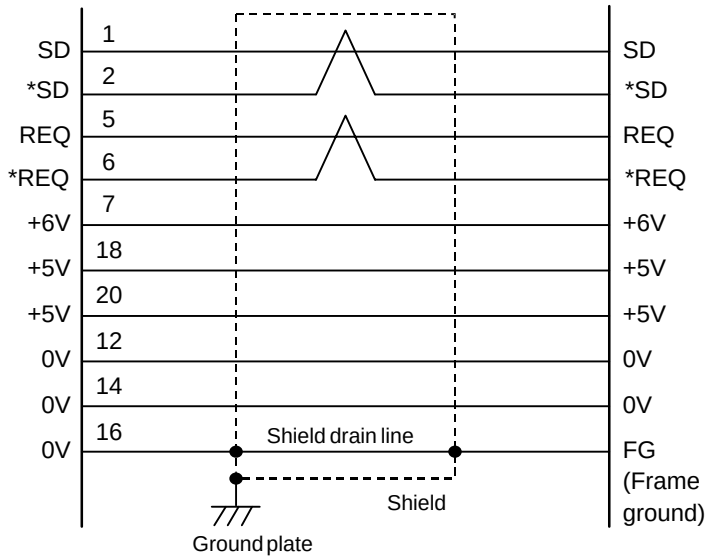

Recommended cable:
A66L–0001–0286 (#20AWG × 6 + #24AWG × 3 pairs)

Recommended connector:
PCR–E20FA (Honda Tsushin Kogyo)
FI30–20S (Hirose Electric)
FCN–247J020–G/E (Fujitsu)
52622–2011 (Molex Japan)
FI40B–2015S (Hirose Electric)

NOTE

1 The +5V signals above can be used to feed power to detectors. The supply current per detector is 0.35 A maximum.
Minimum tolerance to 5 V: 4.95 V for main unit and 4.9 V for expanded section

2 When the 9096 series servo software is used, the serial interface cannot be used.

(Serial interface)

Separate detector interface unit

JF101 to JF104
(PCR–EV20MDT)

1	SD	11	
2	⁎SD	12	0V
3		13	
4		14	0V
5	REQ	15	
6	⁎REQ	16	0V
7	+6V	17	
8		18	+5V
9	+5V	19	
10		20	+5V

Separate detector

Pulse coder

A	SD	B		C		D	⁎SD
E		F	REQ	G	REQ	H	SHLD
J	+5V	K	+5V	L		M	
N	0V	P		R	+6VA	S	0VA
T	0V						

MS3106B20–29SW

Cable connection

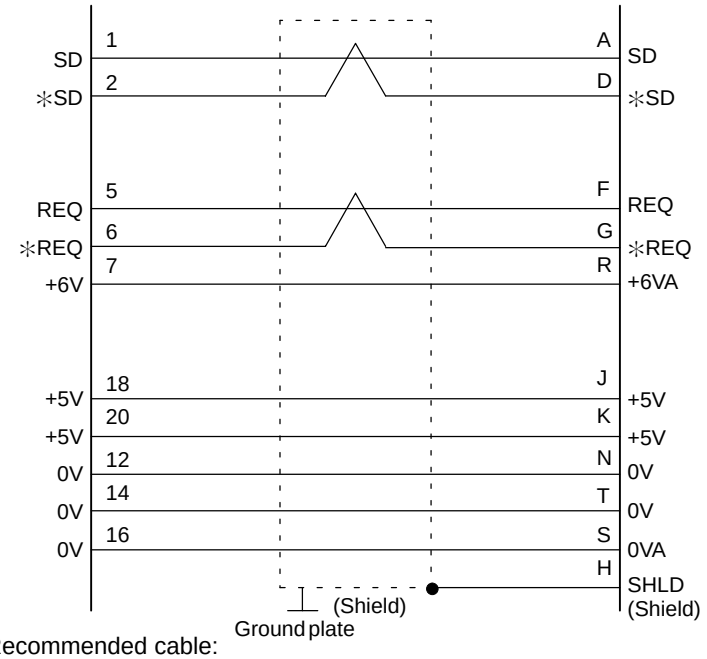

Recommended cable:
A66L–0001–0286 (#20AWG × 6 + #24AWG × 3 pairs)

Recommended connector:
PCR–E20FA (Honda Tsushin Kogyo)
FI30–20S (Hirose Electric)
FCN–247J020–G/E (Fujitsu)
52622–2011 (Molex Japan)
FI40B–2015S (Hirose Electric)

NOTE

1 The +5V signals above can be used to feed power to linear scales. The supply current per linear scale is 0.35 A maximum.
Minimum tolerance to 5 V: 4.95 V for main unit and 4.9 V for expanded section

2 When the 9096 series servo software is used, the serial interface cannot be used.

7.1.8 Input Signal Requirements (Parallel Interface)

The standard of the feedback signal from the additional detector is as shown below.

(1) A and B phase signal input

This is a method to input position information by the mutual 90 degree phase slip of A and B phase signals.
Detection of the position is performed with the state in which the B phase is leading taken as a shift in the plus direction, and the state in which the A phase is leading as a shift in the minus direction.

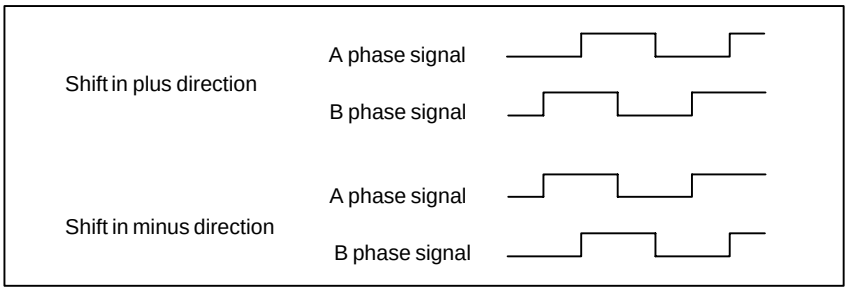

(2) Phase difference and minimum repeat frequency

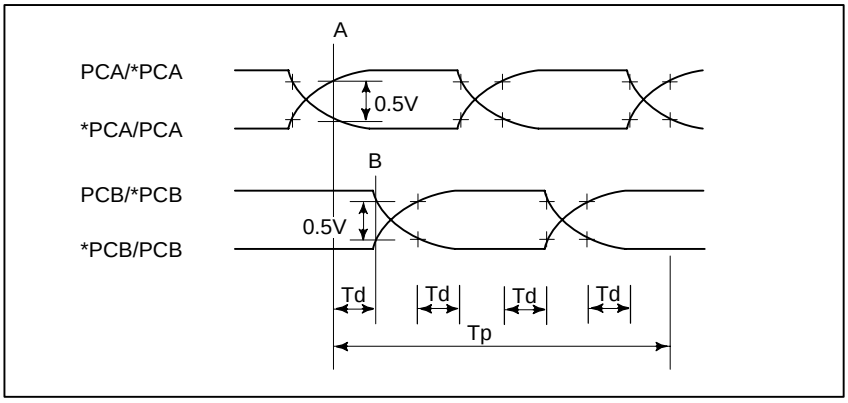

(3) Z phase signal input

For the Z phase signal (1 rotation signal), a signal width of more than 1/4 frequency of the A phase or B phase signals is necessary.

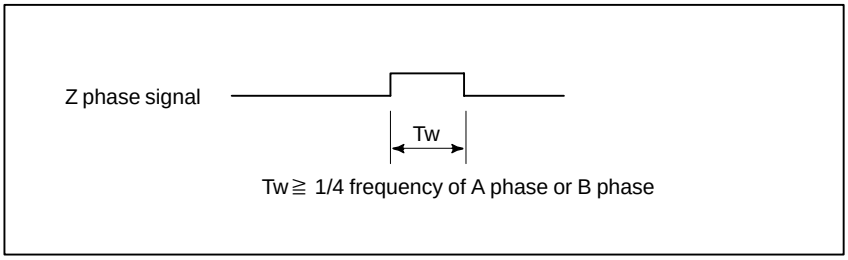

Time requirements

Requirements for the signals at the input pins of input connectors JF101 to JF108.

TD ≧ 0.15 μsec

The signals for these connectors are differential input signals with A and B phases. An important factor is time TD from point A, when the potential difference between PCA and *PCA exceeds 0.5V, to point B, when the potential difference between PCB and *PCB becomes lower than 0.5V. The minimum value of TD is 0.15 μs. The period and pulse width of the signals must be long enough to satisfy the above requirements.

Receiver circuit

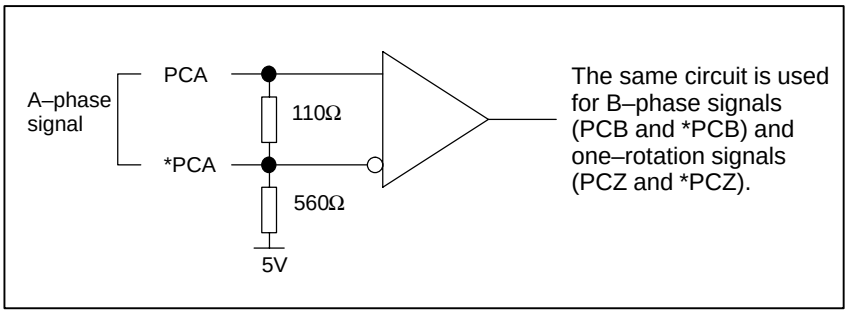

Relationship between the direction of rotation of the servo motor and that of the separate pulse coder

If the separate pulse coder rotates in the opposite direction to that of the servo motor, reconnect the interface cable of the separate pulse coder as described below.

(1) Exchange signal PCA with signal PCB.

(2) Exchange signal *PCA with signal *PCB.

7.1.9 Connection of Battery for Separate Absolute Detector

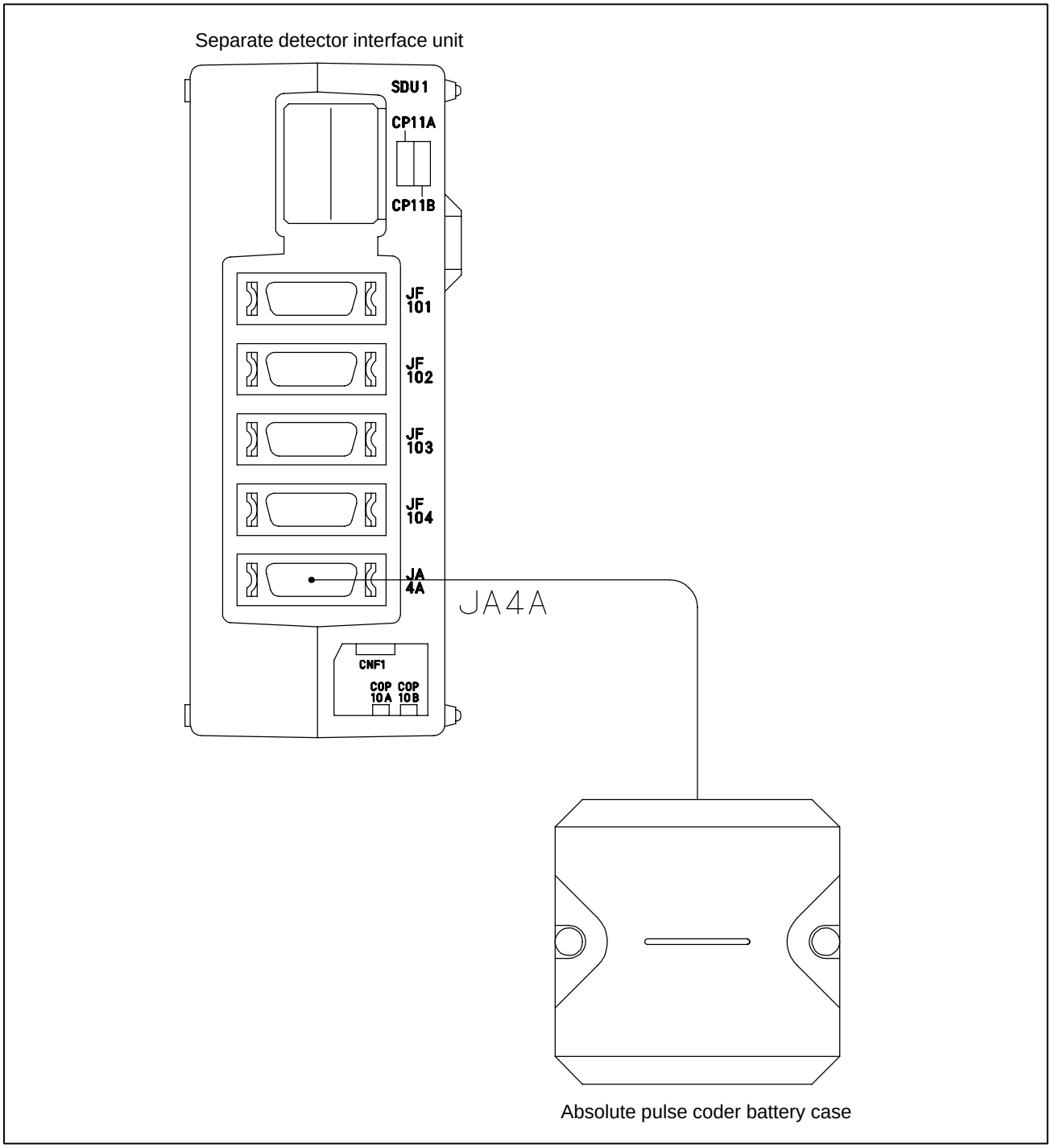

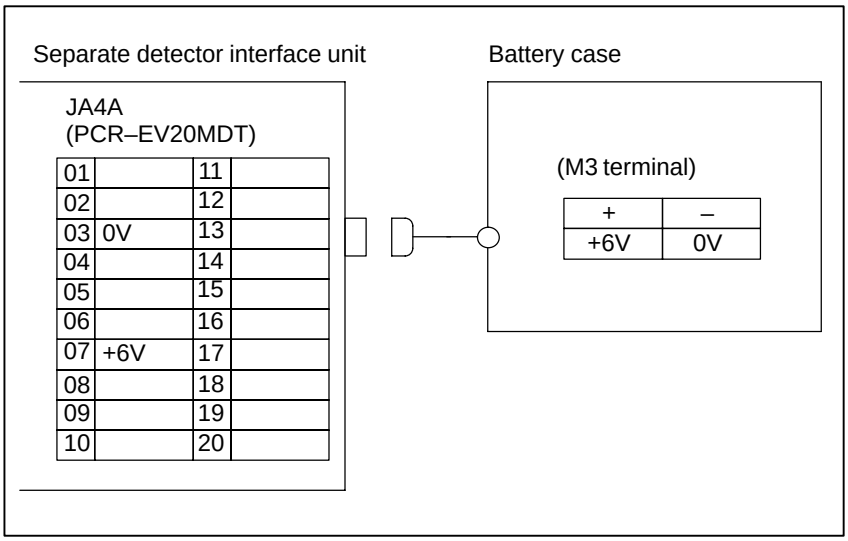

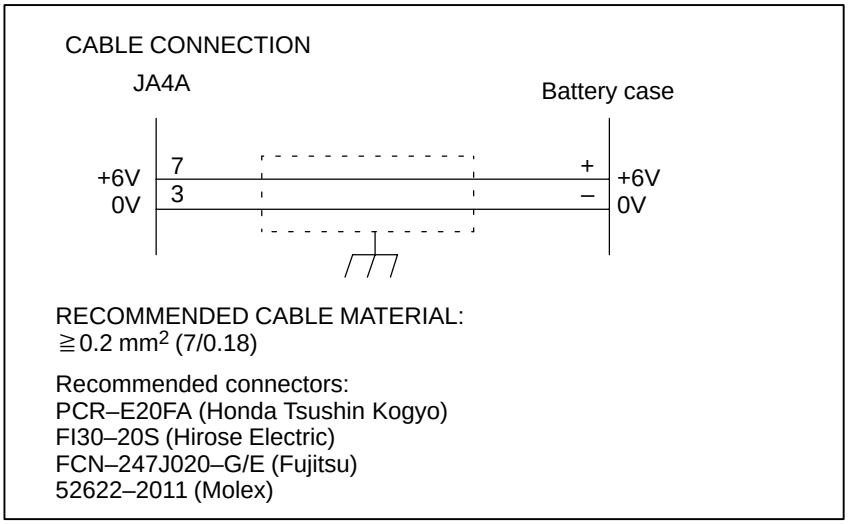

RECOMMENDED CABLE MATERIAL:
≧0.2 mm^2 (7/0.18)

Recommended connectors:
PCR–E20FA (Honda Tsushin Kogyo)
FI30–20S (Hirose Electric)
FCN–247J020–G/E (Fujitsu)
52622–2011 (Molex)

NOTE

The battery for the separate absolute detector is required only when the separate absolute detector is used. When an absolute pulse coder with built–in motor is used, it is powered by the built–in battery of the amplifier, such that the battery for the separate absolute detector is not required.

7.1.10 Connector Locations

Connector locations on the basic unit

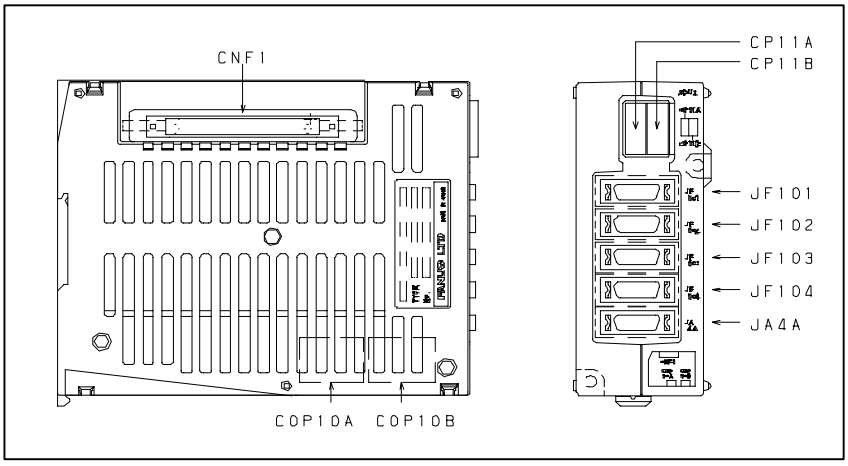

For the outside dimensions, see Appendix A.

7.1.11 Installation

1) Notes on installation

(1) Use an interface unit in a completely enclosed cabinet.

(2) Install an interface unit on a vertical surface, and provide a space of 100 mm above and below the unit. Below an interface unit, do not place equipment that generates a large amount of heat.

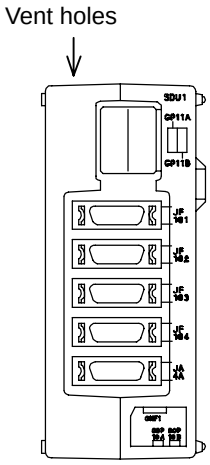

2) Installation using screws

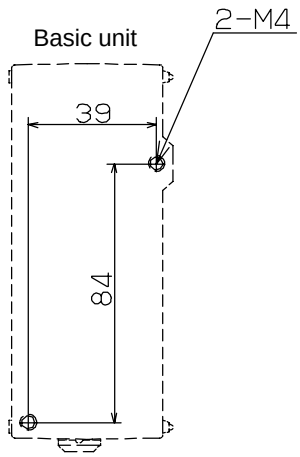

7.1.12 Notes on Installing a Separate Detector Interface Unit

CAUTION

To install/remove the unit, a screwdriver must be inserted obliquely. So, sufficient access clearances are required on both sides of the unit. As a guideline, if the front of an adjacent unit appears flush with the unit or slightly set back, allow a clearance of about 20 mm between the unit and the adjacent unit. If the front of an adjacent unit protrudes beyond the front of the unit, allow a clearance of about 70 mm between the unit and the adjacent unit. Also, when installing the unit near a side of the cabinet, allow a clearance of about 70 mm between the unit and the side of the cabinet.

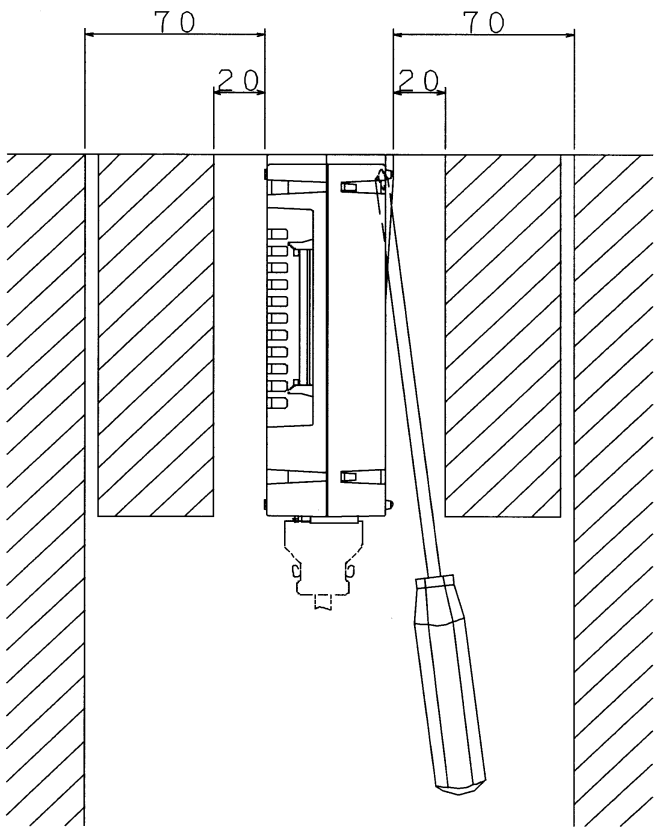

Access clearance near a separate detector interface unit

Installing the unit on the DIN rail

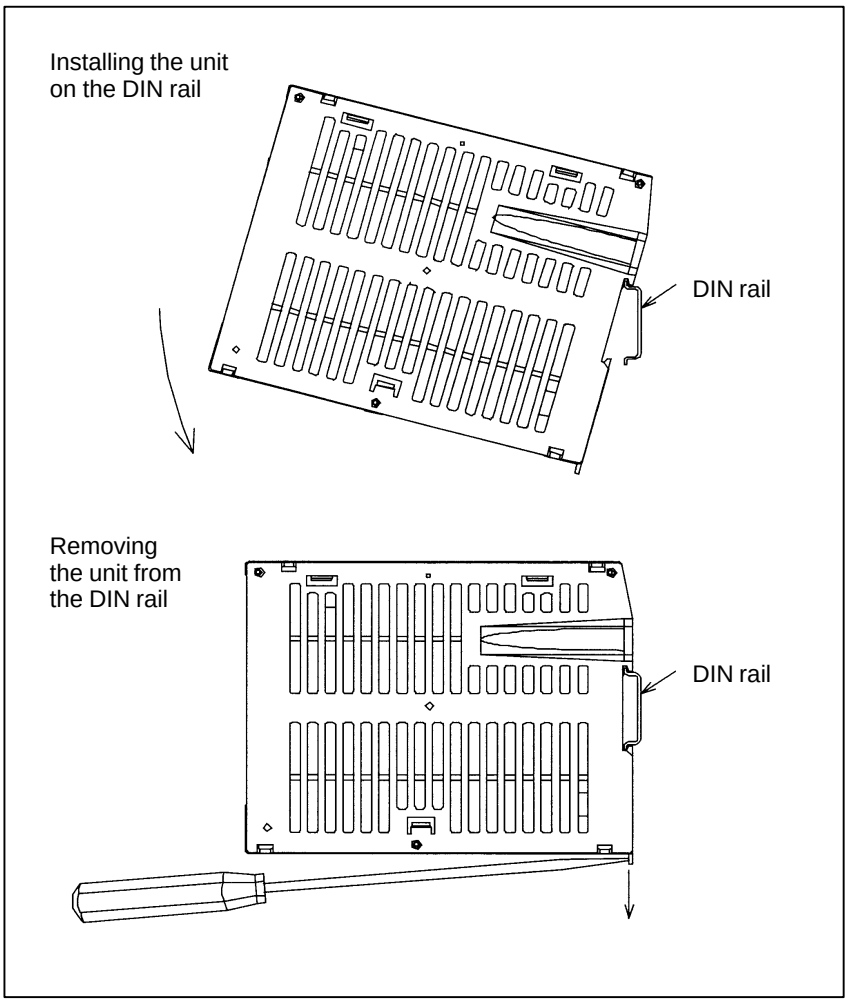

Installing the unit:

1. Hook the unit on the top of the DIN rail.
2. Push the unit in until it clicks.

Removing the unit:

1. Push down the lock by using a screwdriver.
2. Remove the unit by pulling the lower end of the unit towards you.

CAUTION

When removing the unit, be careful not to damage the lock by applying excessive force. When installing and removing the unit, hold the upper and lower ends of the unit so that stress is not applied to the side (that surface with the slits) of the unit.

8 CONNECTION TO FANUC I/O Link

8.1 GENERAL

The FANUC I/O Link is a serial interface which connects the CNC, cell controller, dispersed I/O, machine operator's panel, or Power Mate and transfers I/O signals (bit data) at high speeds between each device. The FANUC I/O Link regards one device as the master and other devices as slaves when more than one device is connected. Input signals from the slaves are sent to the master at specified intervals. Output signals from the master are also sent to the slaves at specified intervals.

8.2 CONNECTION

For the Series 0*i*–C and Series 0*i* Mate–C, the interface connector for I/O Link (JD1A) is located on the unit main board.
In the I/O Link there are the master station and its slave stations. As the Series 0*i*/0*i* Mate control unit, the master is connected to slaves such as a distributed I/O slave. The slaves are divided into groups, and up to 16 groups can be connected to one I/O Link. (For the Series 0*i* Mate, however, the number of I/O points is restricted.)
The I/O Link is connected in different ways depending on the types of units actually used and the I/O points. To connect the I/O Link, the assignment and addresses of the I/O signals have been made programmable with the PMC program. The maximum number of I/O points is 1024.
The two connectors of the I/O Link are named JD1A and JD1B, and are common to all units (that have I/O Link function). A cable is always connected from JD1A of a unit to JD1B of the next unit. Although JD1A of the last unit is not used and left open, it need not be connected with a terminator.
The pin assignments of connectors JD1A and JD1B are common to all units on the I/O Link, and are illustrated on Subsec. 8.2.1. Use the figures when connecting the I/O Link irrespective of the type of unit.

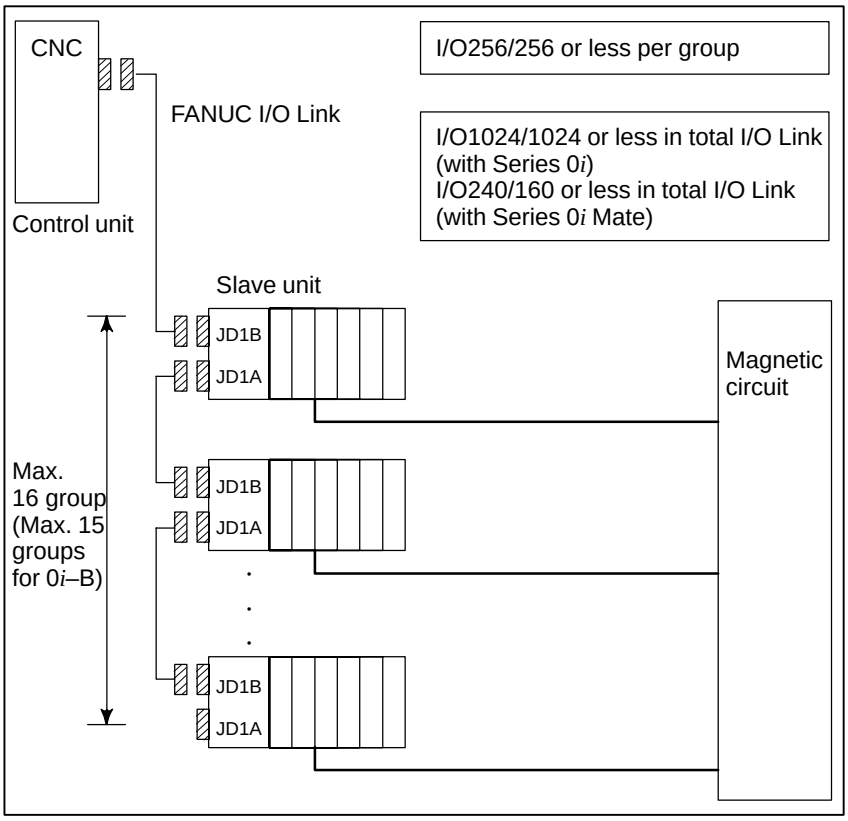

Fig. 8.2 I/O Link connection diagram

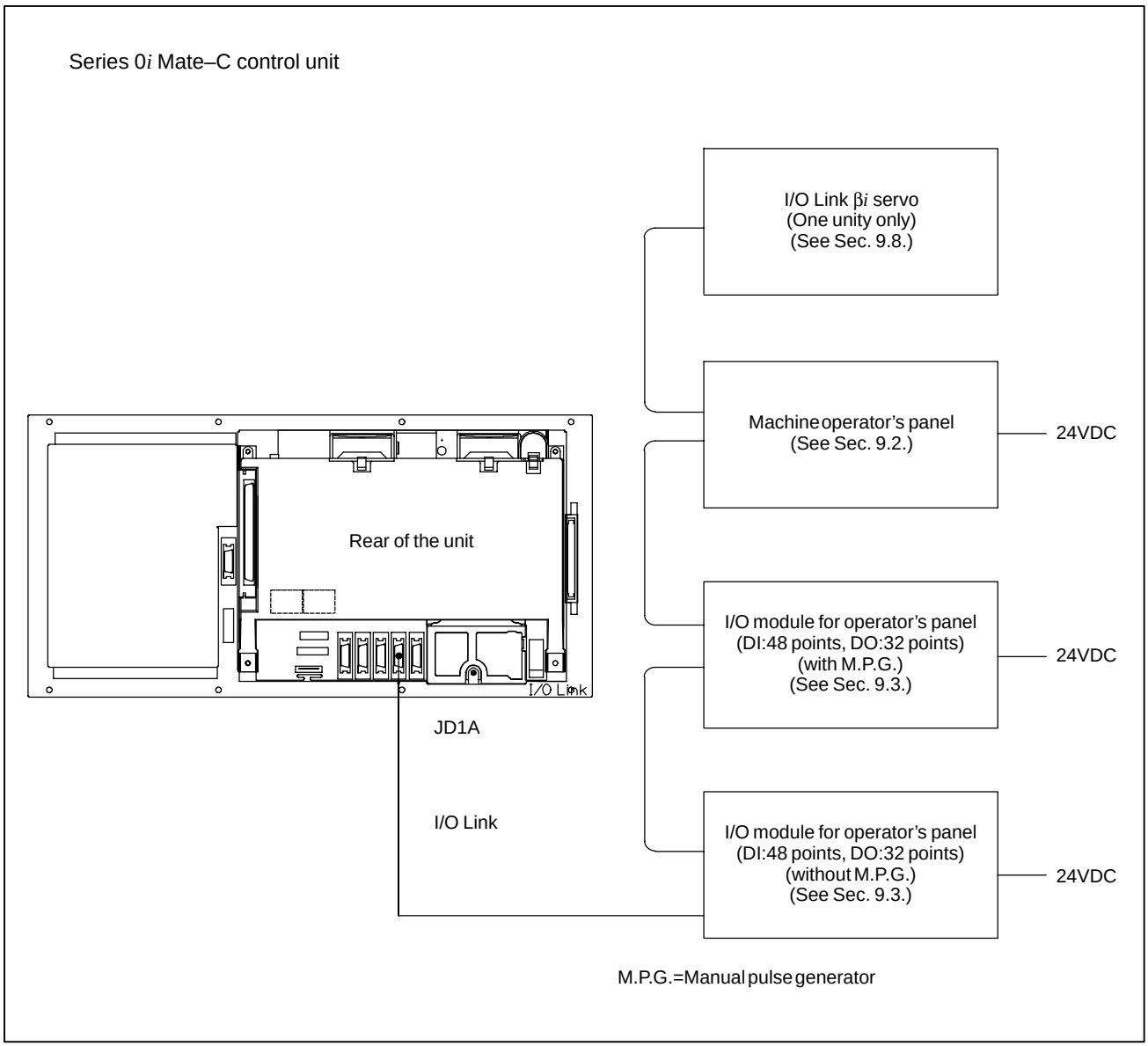
Series 0i Mate–C control unit
I/O Link βi servo
(One unity only)
(See Sec. 9.8.)
Machine operator's panel
(See Sec. 9.2.)
24VDC
Rear of the unit
I/O module for operator's panel
(DI:48 points, DO:32 points)
(with M.P.G.)
(See Sec. 9.3.)
24VDC
I/O Link
JD1A
I/O Link
I/O module for operator's panel
(DI:48 points, DO:32 points)
(without M.P.G.)
(See Sec. 9.3.)
24VDC
M.P.G.=Manual pulse generator

The following is an example in which two operator's panel I/O boards and one machine operator's panel are used.

DI space map

X4	Operator's panel I/O DI 48 points
X5	
•	
X9	
X10	Reserved
•	Reserved
X15	Reserved
X16	First MPG
X17	Second MPG
X18	Third MPG
X19	DO alarm detection
X20	Operator's panel I/O DI 48 points
X21	
•	
X25	
X26	Reserved
•	Reserved
•	Reserved
X34	Reserved
X35	DO alarm detection
X36	Machine operator's panel
•	
X47	

DO space map

Y0	Operator's panel I/O DO 32 points
Y1	
Y2	
Y3	
Y4	Operator's panel I/O DO 32 points
Y5	
Y6	
Y7	
Y8	Machine operator's panel
Y9	
Y10	
Y11	
Y12	
Y13	
Y14	
Y15	

NOTE

1 Since readout from the manual pulse generator (X16 to X18) is directly performed by the CNC, only the above assignment must be performed by the PMC.
2 See Subsec. 9.3.8 for details on DO alarm detection (X19 and X35).
3 For the Series 0*i* Mate, up to 240 DI points and up to 160 DO points can be used.

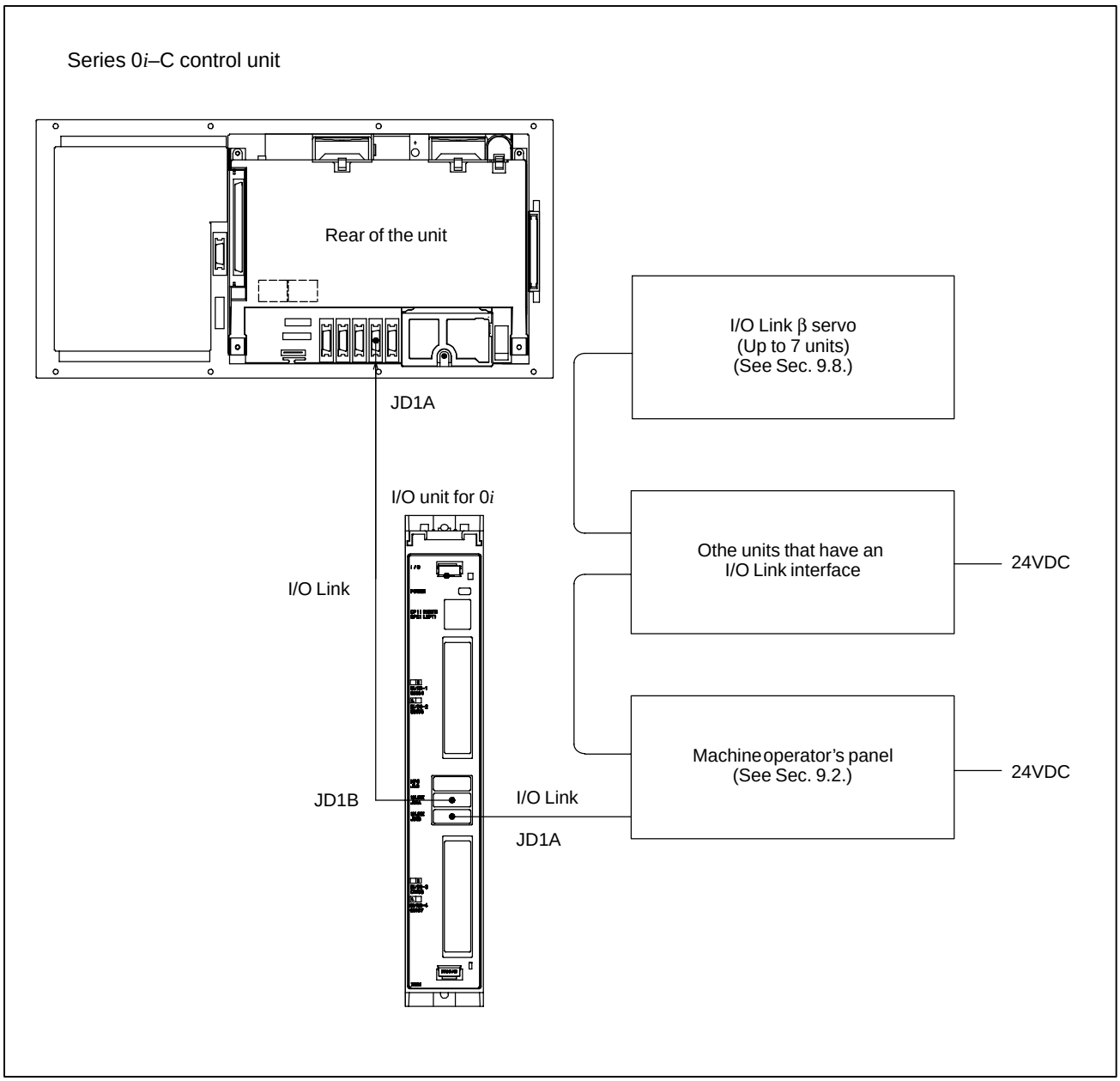
Series 0*i*–C control unit
Rear of the unit
JD1A
I/O Link β servo
(Up to 7 units)
(See Sec. 9.8.)
I/O unit for 0*i*
Othe units that have an
I/O Link interface
24VDC
I/O Link
Machine operator's panel
(See Sec. 9.2.)
24VDC
JD1B
I/O Link
JD1A

DI space map

X0	Built–in I/O DI 96 points
X1	
X2	
X3	
X4	
X5	
X6	
X7	
X8	
X9	
X10	
X11	
X12	First MPG
X13	Second MPG
X14	Third MPG
X15	DO alarm detection
X16	External I/O
X17	
X18	
X19	
X20	
•	
•	
•	
•	

DO space map

Y0	Built–in I/O DO 64 points
Y1	
Y2	
Y3	
Y4	
Y5	
Y6	
Y7	
Y8	External I/O
Y9	
Y10	
Y11	
Y12	
Y13	
Y14	
Y15	
Y16	
Y17	
Y18	
Y19	
Y20	
•	
•	
•	
•	

NOTE

1 Since readout from the manual pulse generator (X12 to X14) is directly performed by the CNC, only the above assignment must be performed by the PMC.

2 See Subsec. 9.3.8 for details on DO alarm detection (X15).

8.2.1 Connection of FANUC I/O Link by Electric Cable

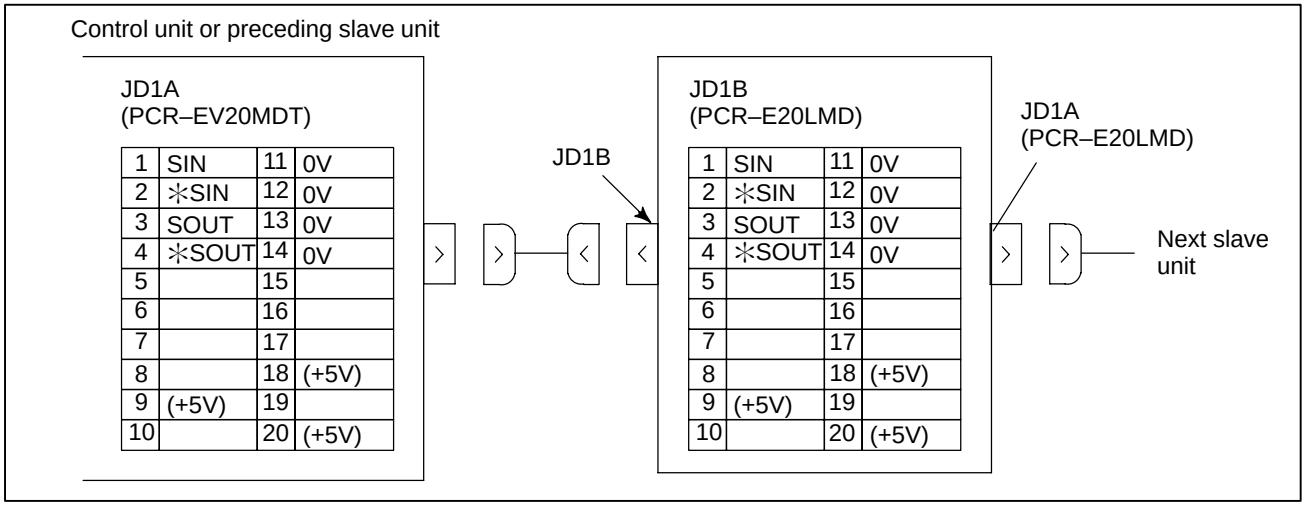

1	SIN	11	0V
2	∗SIN	12	0V
3	SOUT	13	0V
4	∗SOUT	14	0V
5		15	
6		16	
7		17	
8		18	(+5V)
9	(+5V)	19	
10		20	(+5V)

1	SIN	11	0V
2	∗SIN	12	0V
3	SOUT	13	0V
4	∗SOUT	14	0V
5		15	
6		16	
7		17	
8		18	(+5V)
9	(+5V)	19	
10		20	(+5V)

+5 V terminals are for an optical I/O Link adapter. They are not necessary when connecting with a metal cable.
A line for the +5V terminal is not required when the Optical I/O Link Adapter is not used.

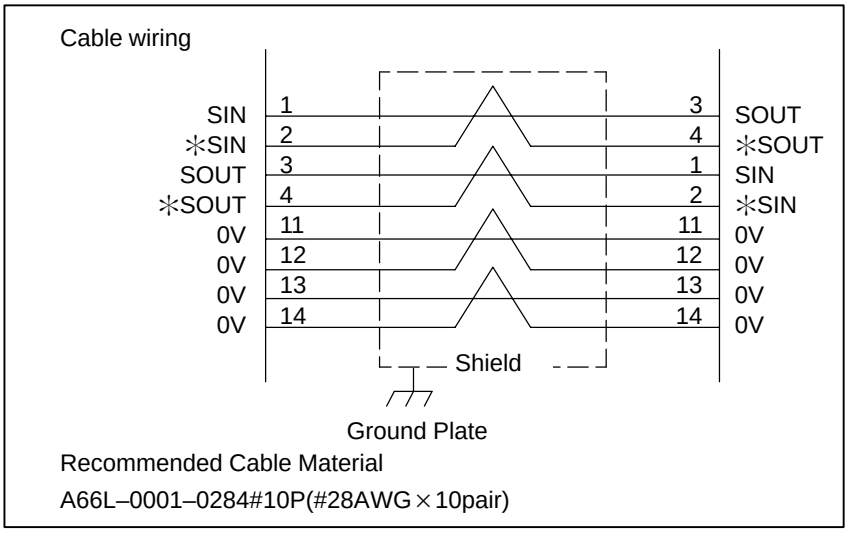

8.2.2 Power Supply Precautions

Take the following precautions about the power supply of a slave unit connected through the FANUC I/O Link.

- During power–up, supply +24 V when or before turning on the CNC.
- During power–down, stop supplying +24 V when or after turning off the CNC.
- When turning off a slave unit, be sure to turn off the other units connected through the same I/O Link.

These are general rules. Therefore, when additional rules are specified for each unit, be sure to observe them.

9 CONNECTION OF I/O Link SLAVE DEVICES

9.1 CONNECTION OF I/O UNITS FOR 0*i*

9.1.1 General

For the Series 0*i*–C, it is possible to use the I/O unit for 0*i* having the same functions as the I/O card built into the Series 0*i*–B as machine interface I/O. The number of DI/DO points of the I/O unit for 0*i* is 96 or 64.
I/O Link is used to connect to controls. For the connection method, see Subsection 8.2.1.
For the I/O unit for 0*i*, it is necessary to perform I/O Link assignment.

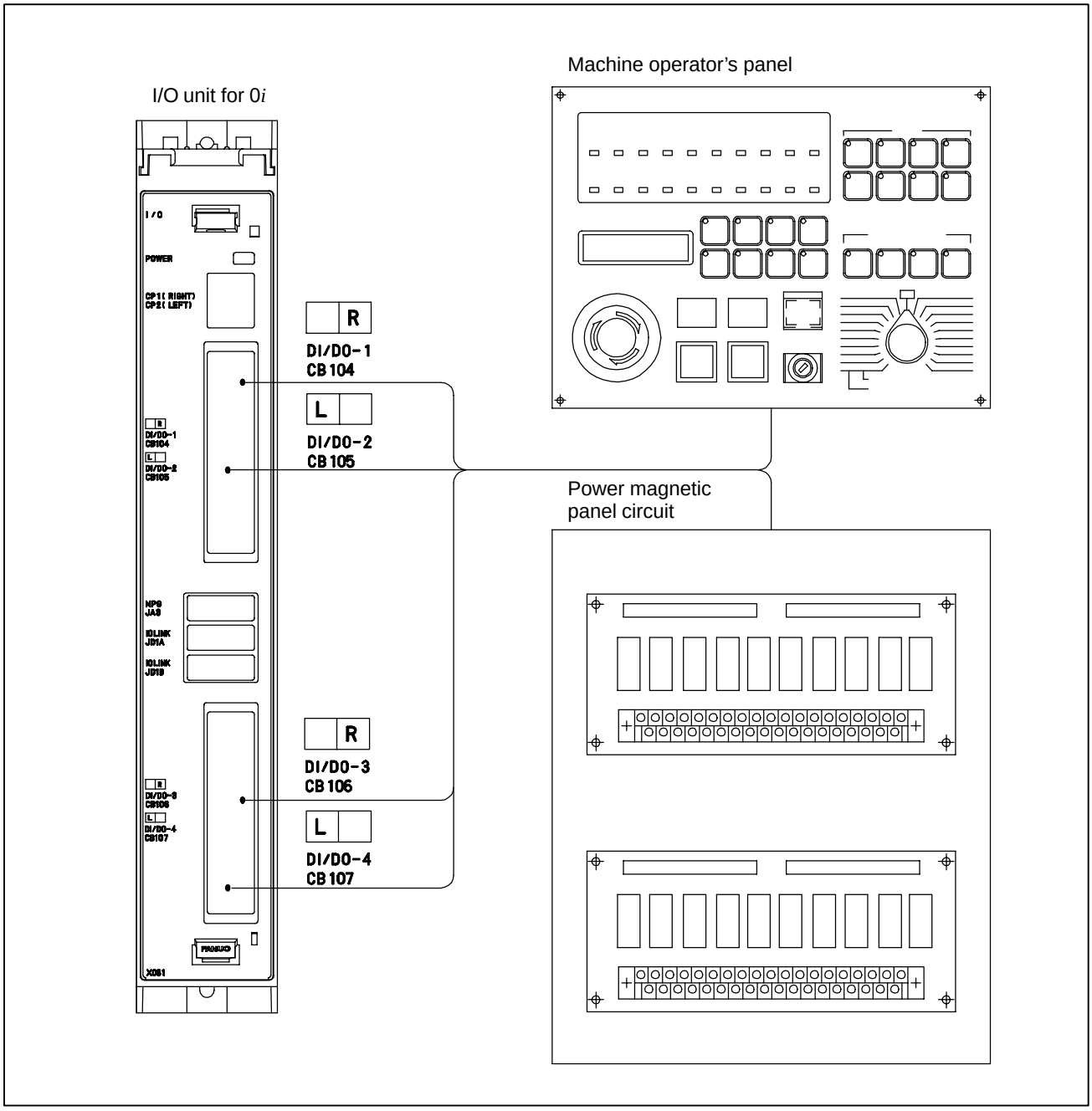

Built–in I/O assignment

DI space map

X0	DI 96 points
X1	
X2	
X3	
X4	
X5	
X6	
X7	
X8	
X9	
X10	
X11	
X12	First MPG
X13	Second MPG
X14	Third MPG
X15	DO alarm detection

Module name: CM16I

DO space map

Y0	DO 64 points
Y1	
Y2	
Y3	
Y4	
Y5	
Y6	
Y7	

Module name: CM08O

NOTE

1 Since readout from a manual pulse generator (X12 to X14) is directly performed by the CNC, only the above assignment must be performed by the PMC.
2 See Chapter 8 for details on DO alarm detection (X15).

If the number of DI/DO points is not sufficient, external I/O units such as the dispersed I/O can be added using the FANUC I/O Link.
A MIL–compatible ribbon cable connector is used as the interface connector of the I/O unit for 0*i* to simplify connection to the connector panel.
The connector can also be used for the Series 0*i*–Mate.

DO signal reaction to a system alarm

If a system alarm occurs in a CNC using this I/O module, or if I/O Link communication between the CNC and operator's panel I/O module fails, all the DO signals of the I/O module are turned off. Therefore, due care must be taken when setting up the machine sequence. Also, the same phenomenon occurs if the power of the CNC or the I/O module is turned off.

9.1.2 Cautions

The following cautions must be observed when using I/O signal receivers and drivers for the machine interface.

DI Signals and Receivers

DI signals are basically of the sink type (a type that drains energy). Some DI signals, however, can be set to either sink type or source type (a type that supplies energy). See the description of the I/O board in the following section for details.
A common signal is provided for selectable receivers. Whether the common signal is connected to 0 V or 24 V determines whether a DI signal is of sink or source type.
A source type DI signal is undesirable from the viewpoint of safety, however, because if the input signal line is grounded, it will be latched in the same state as that existing when the contact is closed. It is recommended that all DI signals be set to sink type.
Always connect the common signal to either 0 or 24 V; do not leave it open.

DO Signals and Drivers

The driver of DO signals is source type (a type that supplies energy, non–insulating).
If a system alarm occurs in a control unit of the Series 0*i*, all I/O board drivers are turned off. Keep this in mind when setting up a machine sequence.
The same situation can occur if the power to the control unit is turned off independently.

9.1.3 Cable for Power Supply to Control Unit

Supply power to the I/O unit for 0*i* from external resouce.

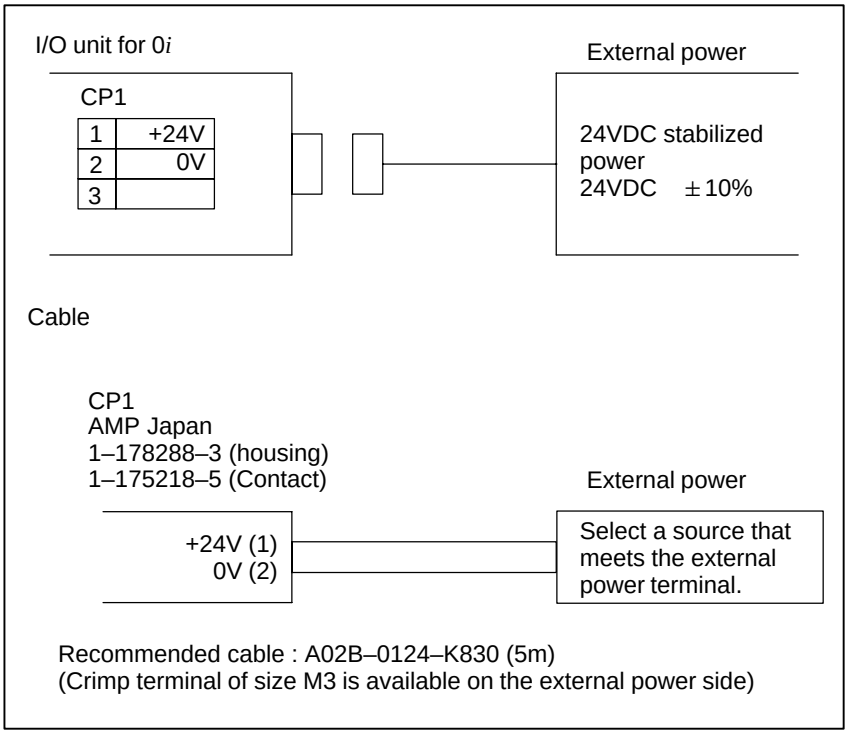

Part of the 24 VDC power input to CP1 can be taken out from CP2 by branching. CP2 should be connected as shown below. In this case, the rating of the external 24 VDC power supplied to CP1 must be the sum of the power consumed within the control unit and that supplied to external equipment via CP2. The maximum capacity of power that can be obtained from a branch is 1.0 A.

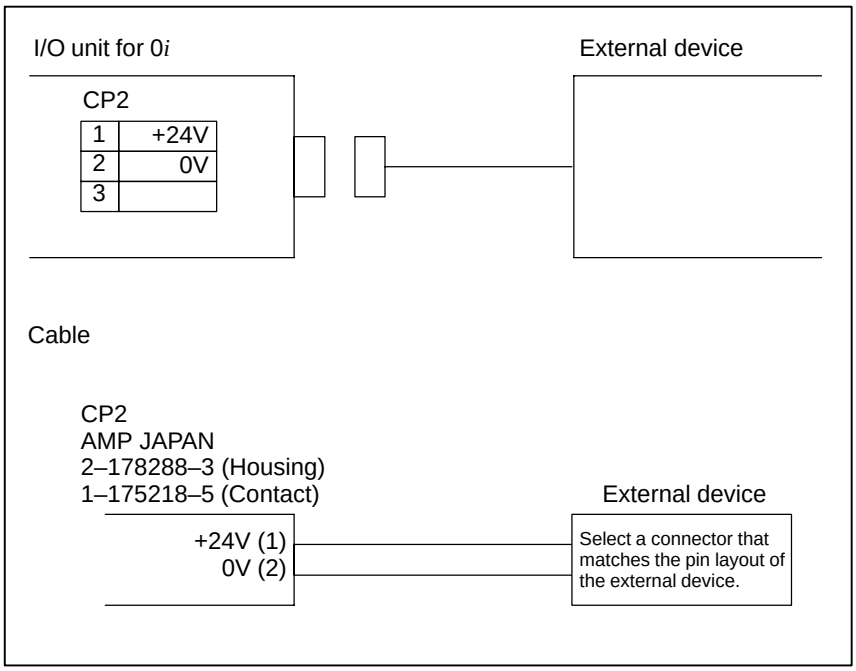

NOTE

Do not interrupt +24 V supplied to this connector during operation. Otherwise, an alarm about communication with the CNC is issued.

A voltage of +24 V must not be supplied after power–on of the CNC and +24 V must not be interrupted before power–off of the CNC. When powering off the CNC body, be sure to power off the I/O unit for 0*i*.

9.1.4 Connector Pin Arrangement

CB104

HIROSE 50PIN

	A	B
01	0V	+24V
02	Xm+0.0	Xm+0.1
03	Xm+0.2	Xm+0.3
04	Xm+0.4	Xm+0.5
05	Xm+0.6	Xm+0.7
06	Xm+1.0	Xm+1.1
07	Xm+1.2	Xm+1.3
08	Xm+1.4	Xm+1.5
09	Xm+1.6	Xm+1.7
10	Xm+2.0	Xm+2.1
11	Xm+2.2	Xm+2.3
12	Xm+2.4	Xm+2.5
13	Xm+2.6	Xm+2.7
14		
15		
16	Yn+0.0	Yn+0.1
17	Yn+0.2	Yn+0.3
18	Yn+0.4	Yn+0.5
19	Yn+0.6	Yn+0.7
20	Yn+1.0	Yn+1.1
21	Yn+1.2	Yn+1.3
22	Yn+1.4	Yn+1.5
23	Yn+1.6	Yn+1.7
24	DOCOM	DOCOM
25	DOCOM	DOCOM

CB105

HIROSE 50PIN

	A	B
01	0V	+24V
02	Xm+3.0	Xm+3.1
03	Xm+3.2	Xm+3.3
04	Xm+3.4	Xm+3.5
05	Xm+3.6	Xm+3.7
06	Xm+8.0	Xm+8.1
07	Xm+8.2	Xm+8.3
08	Xm+8.4	Xm+8.5
09	Xm+8.6	Xm+8.7
10	Xm+9.0	Xm+9.1
11	Xm+9.2	Xm+9.3
12	Xm+9.4	Xm+9.5
13	Xm+9.6	Xm+9.7
14		
15		
16	Yn+2.0	Yn+2.1
17	Yn+2.2	Yn+2.3
18	Yn+2.4	Yn+2.5
19	Yn+2.6	Yn+2.7
20	Yn+3.0	Yn+3.1
21	Yn+3.2	Yn+3.3
22	Yn+3.4	Yn+3.5
23	Yn+3.6	Yn+3.7
24	DOCOM	DOCOM
25	DOCOM	DOCOM

CB106

HIROSE 50PIN

	A	B
01	0V	+24V
02	Xm+4.0	Xm+4.1
03	Xm+4.2	Xm+4.3
04	Xm+4.4	Xm+4.5
05	Xm+4.6	Xm+4.7
06	Xm+5.0	Xm+5.1
07	Xm+5.2	Xm+5.3
08	Xm+5.4	Xm+5.5
09	Xm+5.6	Xm+5.7
10	Xm+6.0	Xm+6.1
11	Xm+6.2	Xm+6.3
12	Xm+6.4	Xm+6.5
13	Xm+6.6	Xm+6.7
14	COM4	
15		
16	Yn+4.0	Yn+4.1
17	Yn+4.2	Yn+4.3
18	Yn+4.4	Yn+4.5
19	Yn+4.6	Yn+4.7
20	Yn+5.0	Yn+5.1
21	Yn+5.2	Yn+5.3
22	Yn+5.4	Yn+5.5
23	Yn+5.6	Yn+5.7
24	DOCOM	DOCOM
25	DOCOM	DOCOM

CB107

HIROSE 50PIN

	A	B
01	0V	+24V
02	Xm+7.0	Xm+7.1
03	Xm+7.2	Xm+7.3
04	Xm+7.4	Xm+7.5
05	Xm+7.6	Xm+7.7
06	Xm+10.0	Xm+10.1
07	Xm+10.2	Xm+10.3
08	Xm+10.4	Xm+10.5
09	Xm+10.6	Xm+10.7
10	Xm+11.0	Xm+11.1
11	Xm+11.2	Xm+11.3
12	Xm+11.4	Xm+11.5
13	Xm+11.6	Xm+11.7
14		
15		
16	Yn+6.0	Yn+6.1
17	Yn+6.2	Yn+6.3
18	Yn+6.4	Yn+6.5
19	Yn+6.6	Yn+6.7
20	Yn+7.0	Yn+7.1
21	Yn+7.2	Yn+7.3
22	Yn+7.4	Yn+7.5
23	Yn+7.6	Yn+7.7
24	DOCOM	DOCOM
25	DOCOM	DOCOM

NOTE

1 The B01 +24 V pins of the connectors (CB104, CB105, CB106, and CB107) are used for the DI input signals, and which output 24 VDC.
Do not connect +24 V of an external power supply to these pins.

2 Each DOCOM is connected in the printer board. If using the DO signal (Y) of a connector, be sure to input 24 VDC to each pin of the DOCOM of that connector.

- Connector recommended for use on the cable side :
  HIF3BB–50D–2.54R (Hirose) : Refer to Appendix A.

9.1.5 Connecting DI/DO

For example, connecting DI

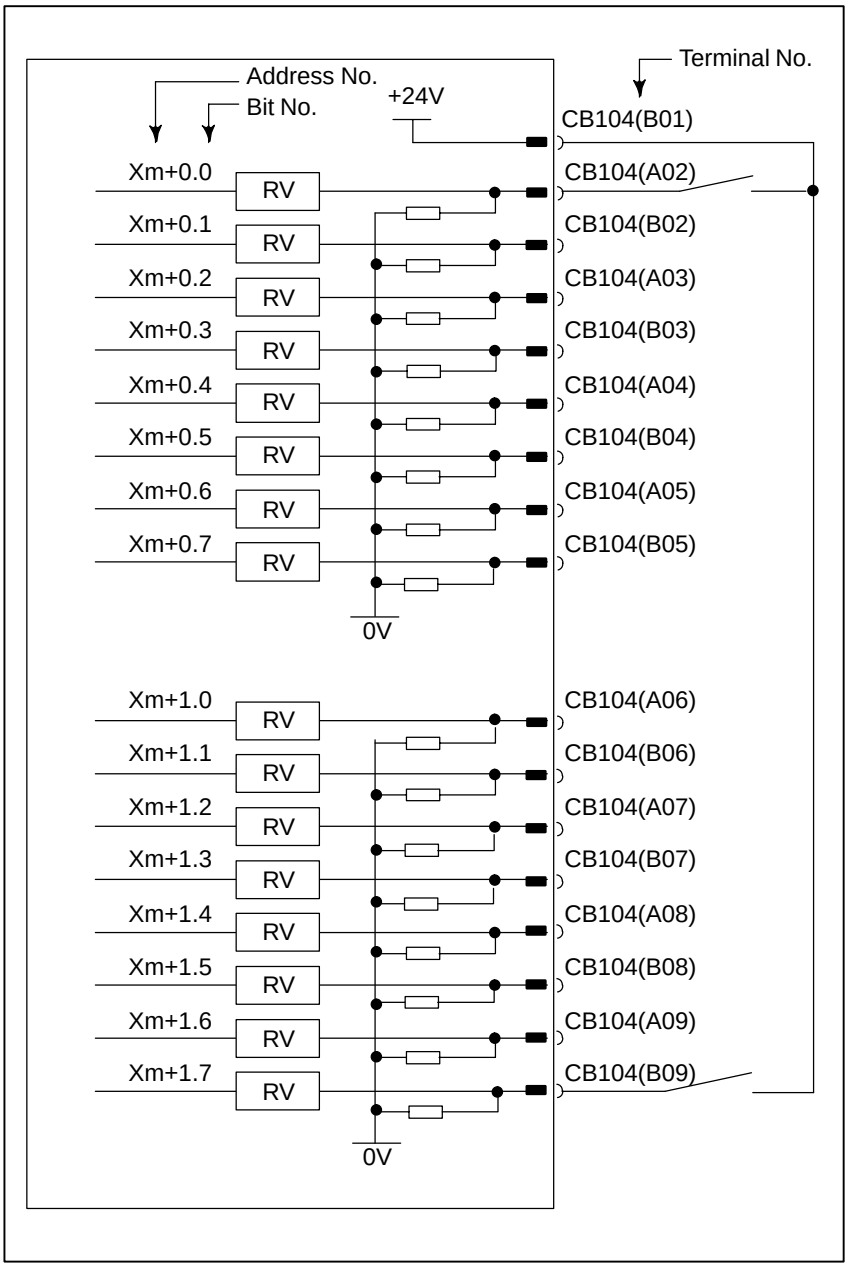

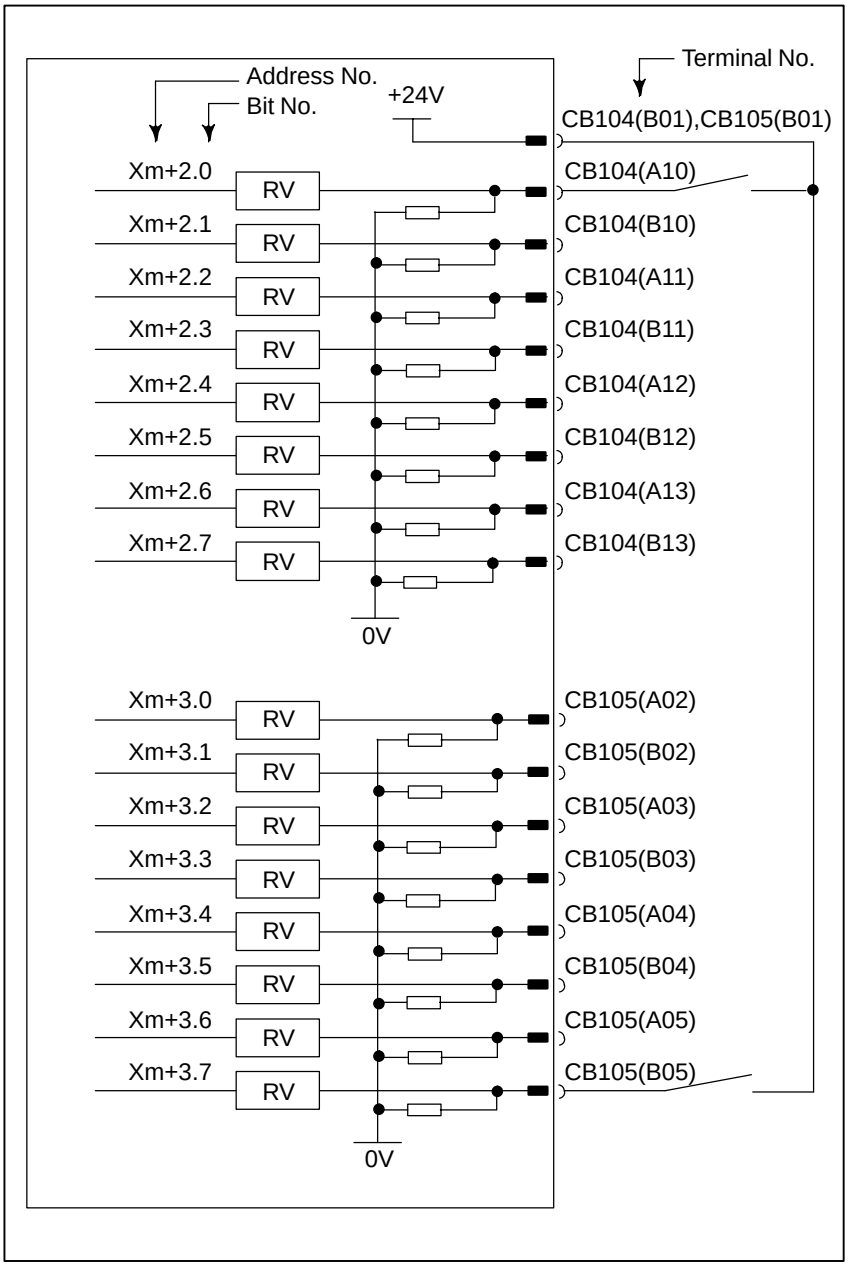
Address No.
Bit No.
+24V
Terminal No.
CB104(B01),CB105(B01)
Xm+2.0
Xm+2.1
Xm+2.2
Xm+2.3
Xm+2.4
Xm+2.5
Xm+2.6
Xm+2.7
RV
CB104(A10)
CB104(B10)
CB104(A11)
CB104(B11)
CB104(A12)
CB104(B12)
CB104(A13)
CB104(B13)
0V
Xm+3.0
Xm+3.1
Xm+3.2
Xm+3.3
Xm+3.4
Xm+3.5
Xm+3.6
Xm+3.7
CB105(A02)
CB105(B02)
CB105(A03)
CB105(B03)
CB105(A04)
CB105(B04)
CB105(A05)
CB105(B05)
0V

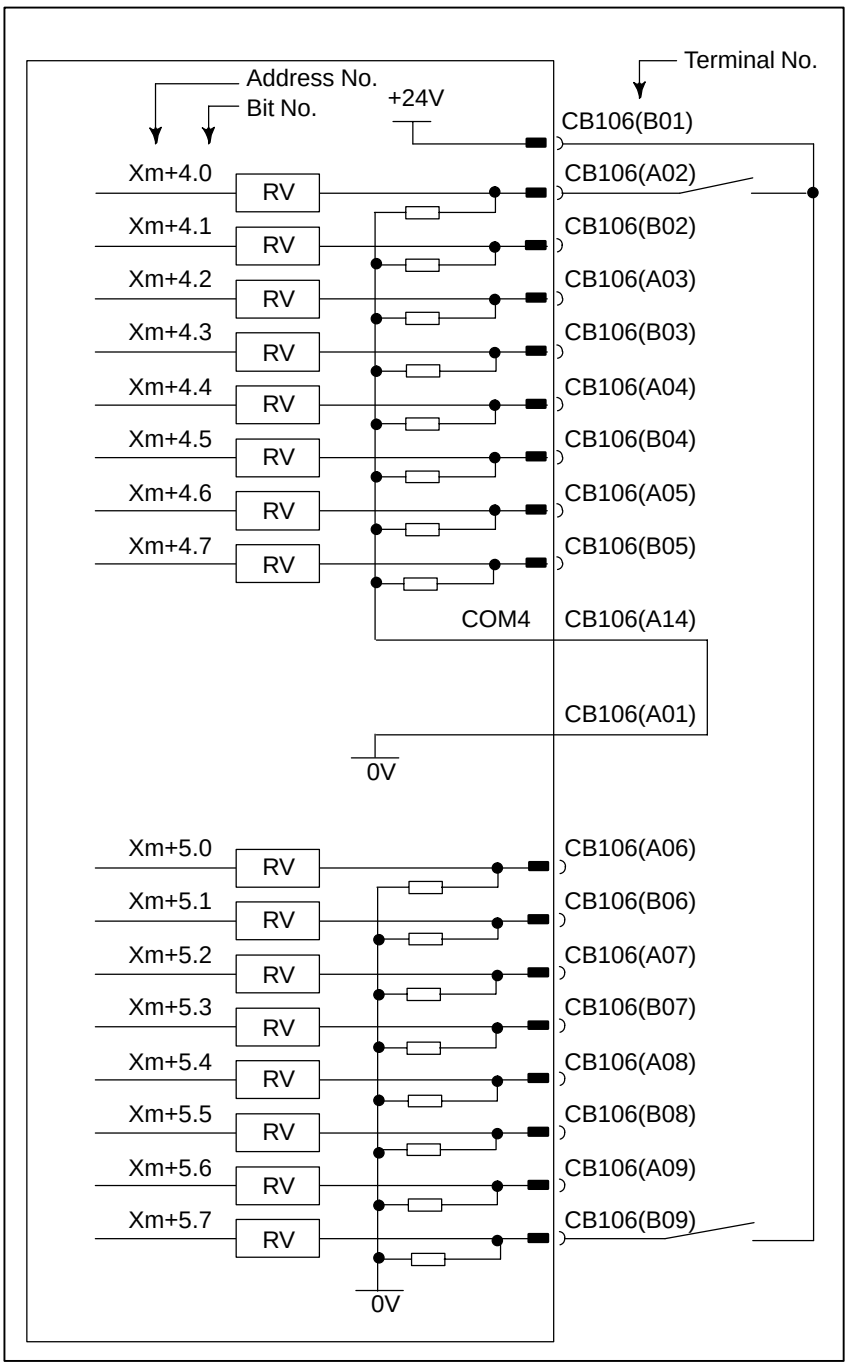

For address Xm+4, either a source or sink type (with a 0– or 24–V common voltage) can be selected. COM4 must be connected to either 24 or 0 V; never leave it open. From the viewpoint of safety standards, it is recommended that a sink type signal be used. The above diagram shows an example in which the signal is of sink type (with a 24–V common voltage).

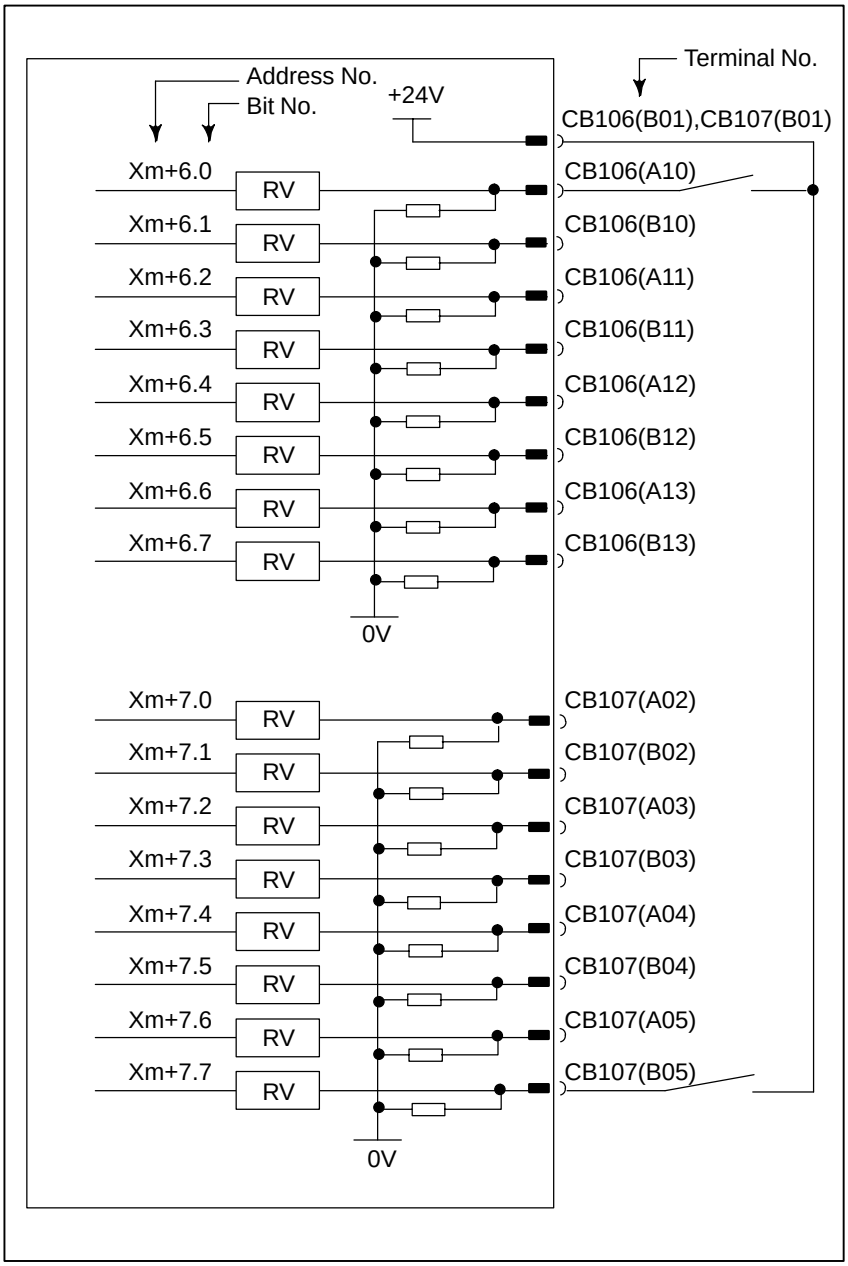
Address No.
Bit No.
+24V
Terminal No.
CB106(B01),CB107(B01)
Xm+6.0
Xm+6.1
Xm+6.2
Xm+6.3
Xm+6.4
Xm+6.5
Xm+6.6
Xm+6.7
RV
CB106(A10)
CB106(B10)
CB106(A11)
CB106(B11)
CB106(A12)
CB106(B12)
CB106(A13)
CB106(B13)
0V
Xm+7.0
Xm+7.1
Xm+7.2
Xm+7.3
Xm+7.4
Xm+7.5
Xm+7.6
Xm+7.7
CB107(A02)
CB107(B02)
CB107(A03)
CB107(B03)
CB107(A04)
CB107(B04)
CB107(A05)
CB107(B05)
0V

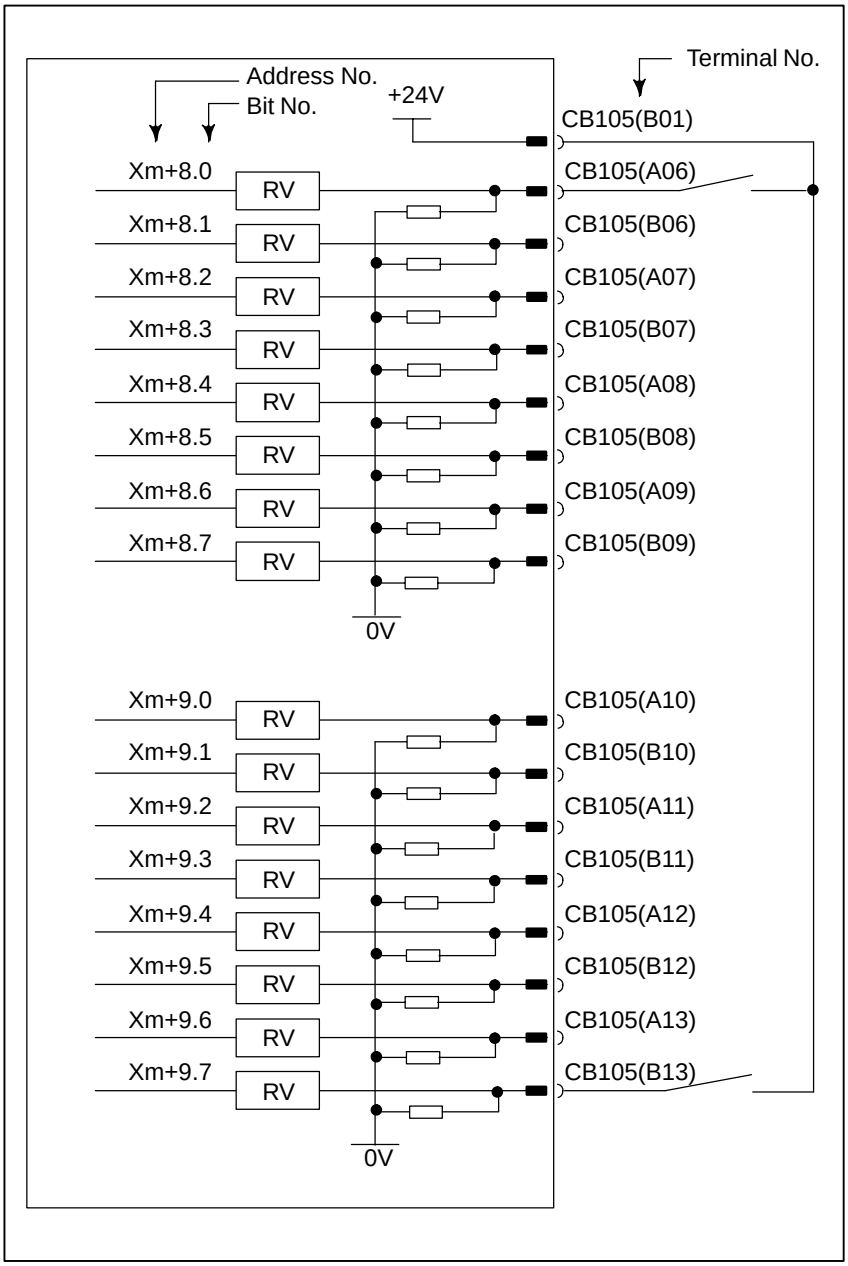
Address No.
Bit No.
Terminal No.
+24V
CB105(B01)
Xm+8.0
RV
CB105(A06)
Xm+8.1
RV
CB105(B06)
Xm+8.2
RV
CB105(A07)
Xm+8.3
RV
CB105(B07)
Xm+8.4
RV
CB105(A08)
Xm+8.5
RV
CB105(B08)
Xm+8.6
RV
CB105(A09)
Xm+8.7
RV
CB105(B09)
0V
Xm+9.0
RV
CB105(A10)
Xm+9.1
RV
CB105(B10)
Xm+9.2
RV
CB105(A11)
Xm+9.3
RV
CB105(B11)
Xm+9.4
RV
CB105(A12)
Xm+9.5
RV
CB105(B12)
Xm+9.6
RV
CB105(A13)
Xm+9.7
RV
CB105(B13)
0V

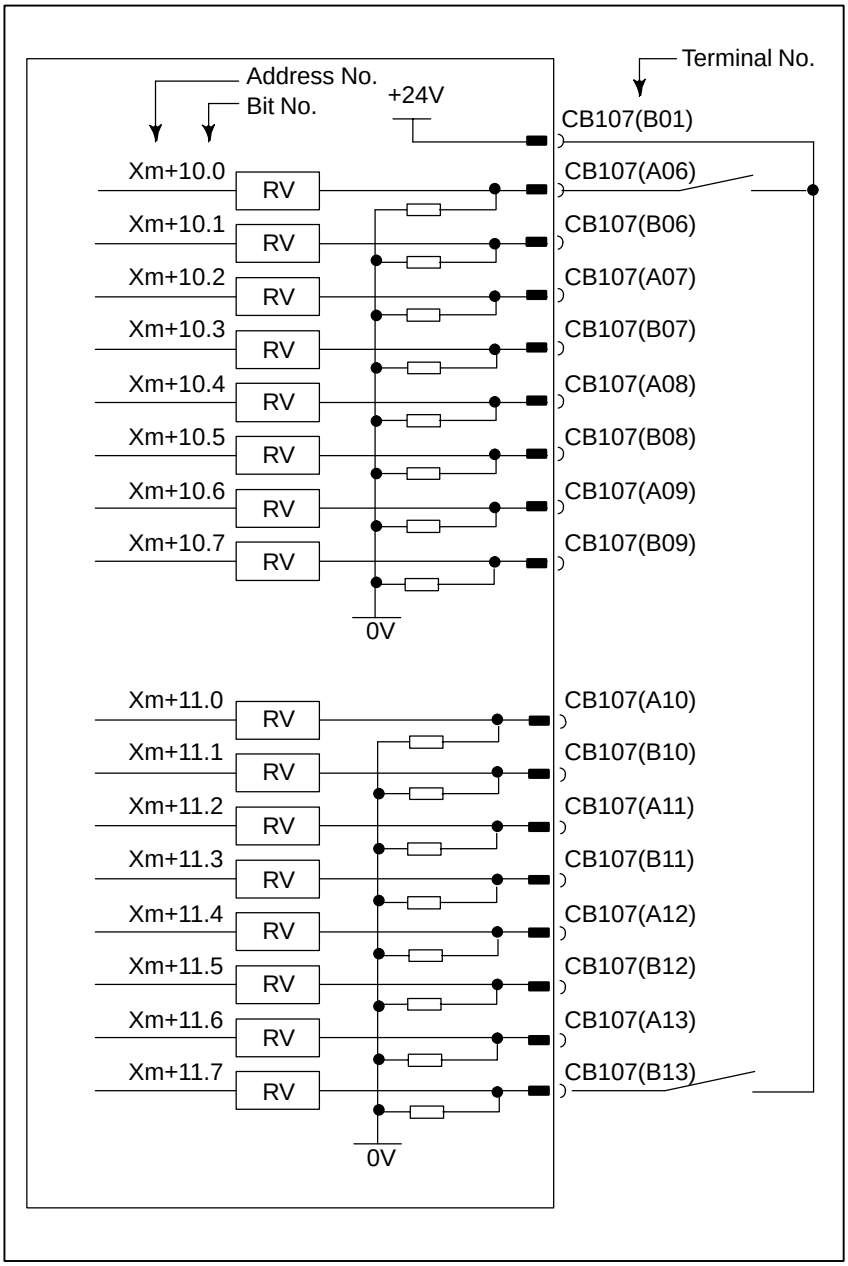
Address No.
Bit No.
Terminal No.
+24V
CB107(B01)
Xm+10.0
RV
CB107(A06)
Xm+10.1
RV
CB107(B06)
Xm+10.2
RV
CB107(A07)
Xm+10.3
RV
CB107(B07)
Xm+10.4
RV
CB107(A08)
Xm+10.5
RV
CB107(B08)
Xm+10.6
RV
CB107(A09)
Xm+10.7
RV
CB107(B09)
0V
Xm+11.0
RV
CB107(A10)
Xm+11.1
RV
CB107(B10)
Xm+11.2
RV
CB107(A11)
Xm+11.3
RV
CB107(B11)
Xm+11.4
RV
CB107(A12)
Xm+11.5
RV
CB107(B12)
Xm+11.6
RV
CB107(A13)
Xm+11.7
RV
CB107(B13)
0V

For example, connecting DO

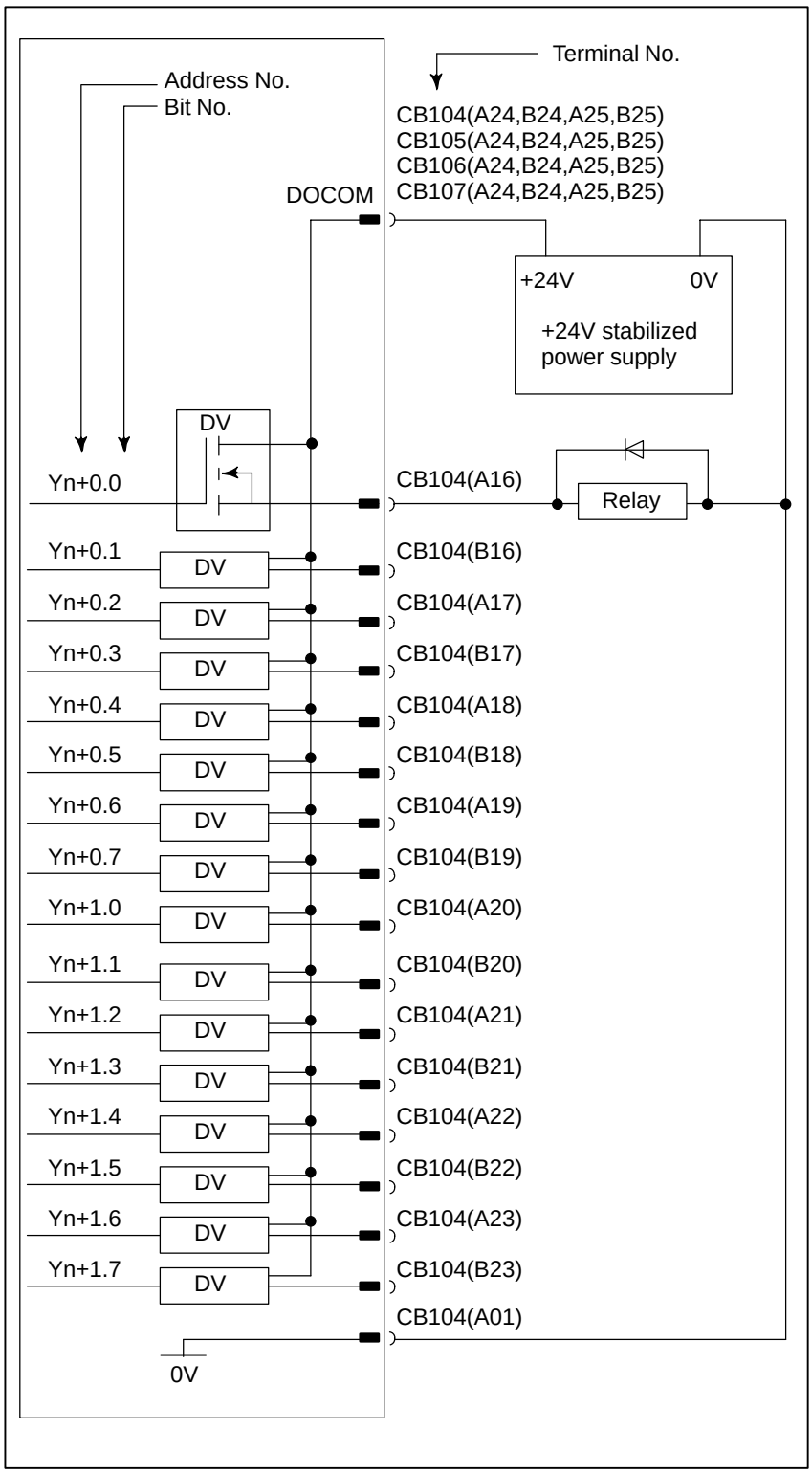

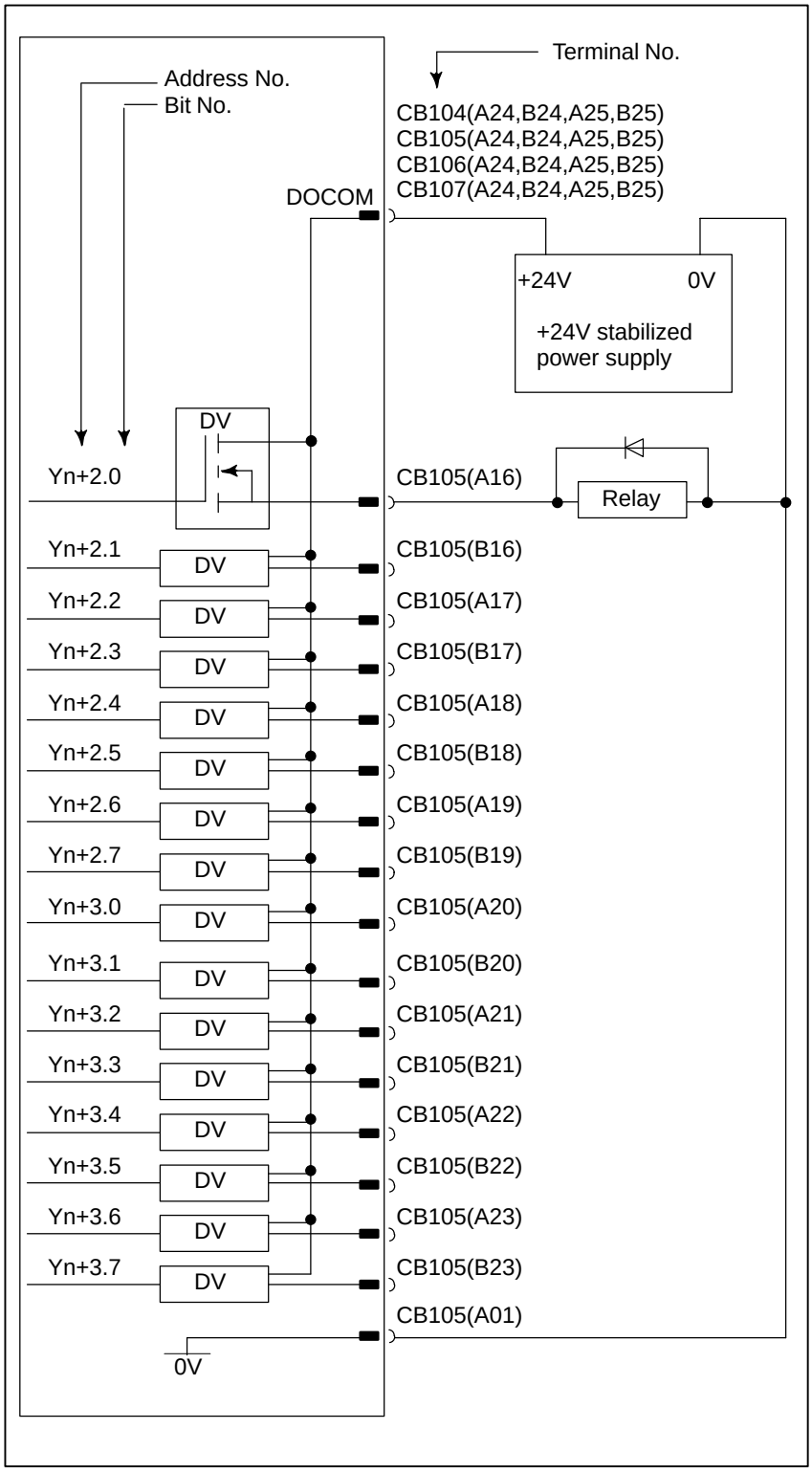
Terminal No.
Address No.
Bit No.
CB104(A24,B24,A25,B25)
CB105(A24,B24,A25,B25)
CB106(A24,B24,A25,B25)
CB107(A24,B24,A25,B25)
DOCOM
+24V
0V
+24V stabilized power supply
DV
Yn+2.0
CB105(A16)
Relay
Yn+2.1
CB105(B16)
Yn+2.2
CB105(A17)
Yn+2.3
CB105(B17)
Yn+2.4
CB105(A18)
Yn+2.5
CB105(B18)
Yn+2.6
CB105(A19)
Yn+2.7
CB105(B19)
Yn+3.0
CB105(A20)
Yn+3.1
CB105(B20)
Yn+3.2
CB105(A21)
Yn+3.3
CB105(B21)
Yn+3.4
CB105(A22)
Yn+3.5
CB105(B22)
Yn+3.6
CB105(A23)
Yn+3.7
CB105(B23)
CB105(A01)
0V

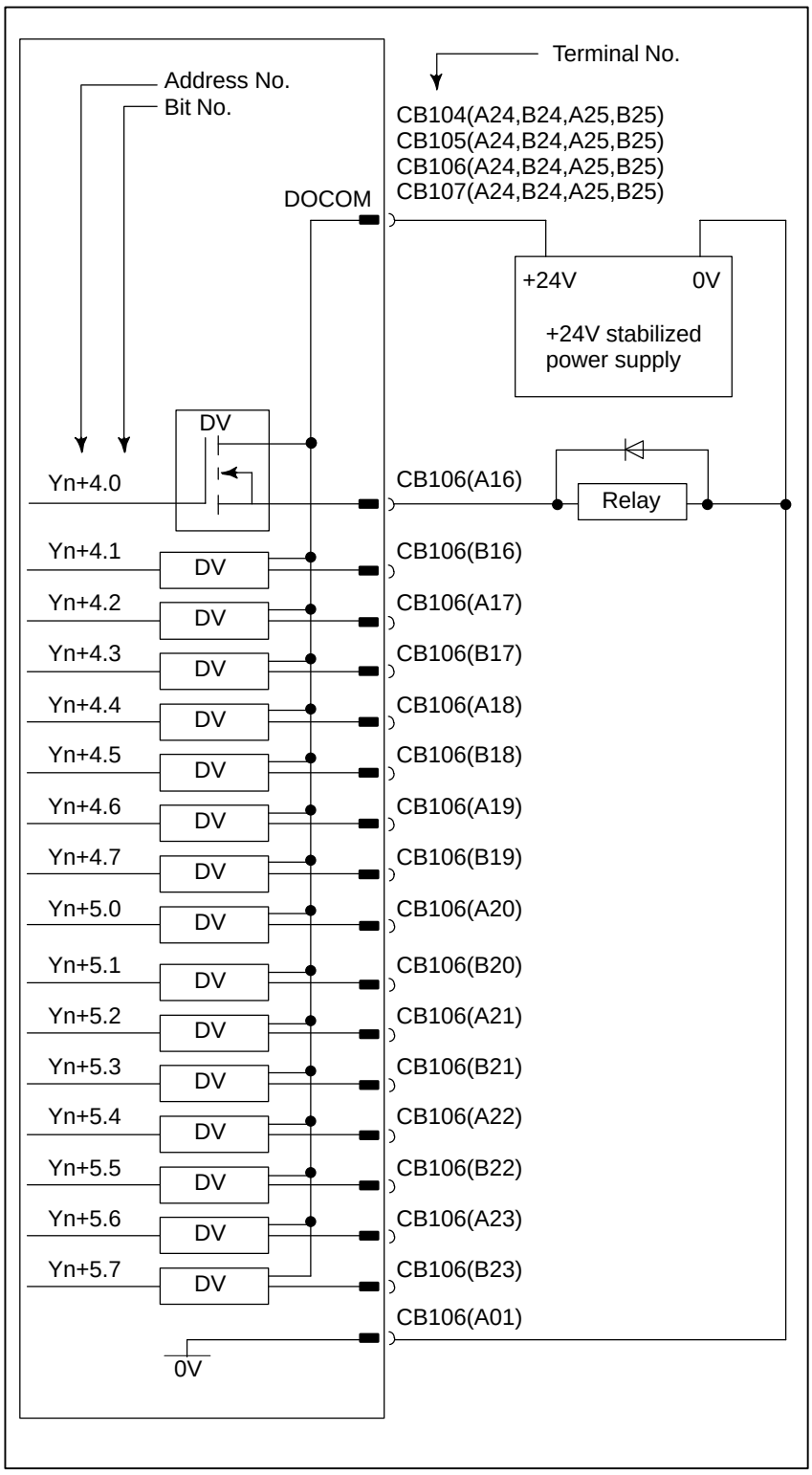
Terminal No.
Address No.
Bit No.
CB104(A24,B24,A25,B25)
CB105(A24,B24,A25,B25)
CB106(A24,B24,A25,B25)
CB107(A24,B24,A25,B25)
DOCOM
+24V
0V
+24V stabilized power supply
DV
Yn+4.0
CB106(A16)
Relay
Yn+4.1
CB106(B16)
Yn+4.2
CB106(A17)
Yn+4.3
CB106(B17)
Yn+4.4
CB106(A18)
Yn+4.5
CB106(B18)
Yn+4.6
CB106(A19)
Yn+4.7
CB106(B19)
Yn+5.0
CB106(A20)
Yn+5.1
CB106(B20)
Yn+5.2
CB106(A21)
Yn+5.3
CB106(B21)
Yn+5.4
CB106(A22)
Yn+5.5
CB106(B22)
Yn+5.6
CB106(A23)
Yn+5.7
CB106(B23)
CB106(A01)
0V

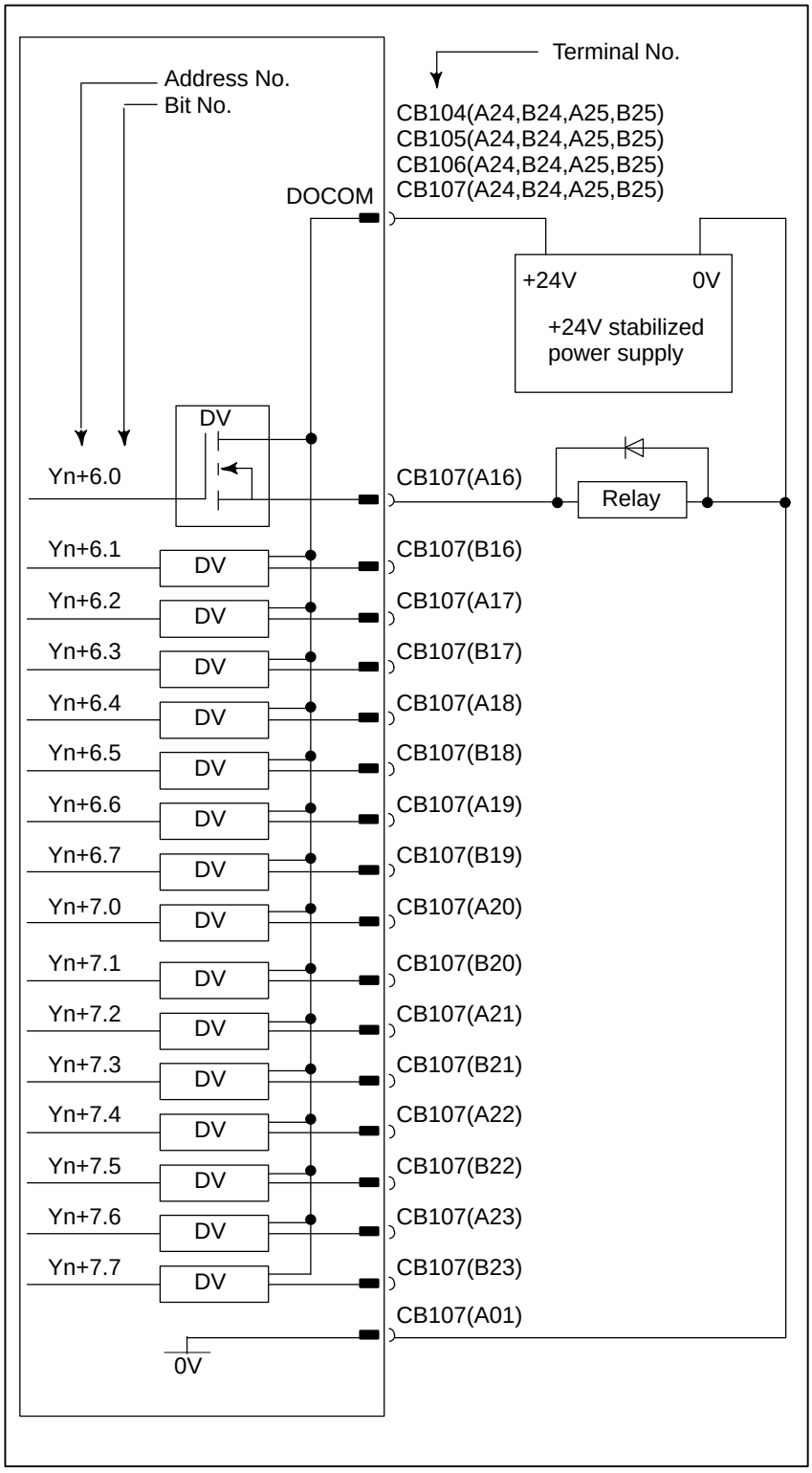
Terminal No.
Address No.
Bit No.
CB104(A24,B24,A25,B25)
CB105(A24,B24,A25,B25)
CB106(A24,B24,A25,B25)
CB107(A24,B24,A25,B25)
DOCOM
+24V
0V
+24V stabilized power supply
DV
Yn+6.0
CB107(A16)
Relay
Yn+6.1
CB107(B16)
Yn+6.2
CB107(A17)
Yn+6.3
CB107(B17)
Yn+6.4
CB107(A18)
Yn+6.5
CB107(B18)
Yn+6.6
CB107(A19)
Yn+6.7
CB107(B19)
Yn+7.0
CB107(A20)
Yn+7.1
CB107(B20)
Yn+7.2
CB107(A21)
Yn+7.3
CB107(B21)
Yn+7.4
CB107(A22)
Yn+7.5
CB107(B22)
Yn+7.6
CB107(A23)
Yn+7.7
CB107(B23)
CB107(A01)
0V

9.1.6 I/O Signal Requirements and External Power Supply for DO

Requirements for DI signals	Contact capacity : 30 VDC 16 mA or more Leakage current between contact points for an open circuit : 1 mA or less (at 26.4 V) Voltage drop between contact points for a closed circuit : 2 V or less (including the voltage drop in the cables)
Ratings for the DO output driver	Maximum load current when turned on : 200 mA or less, including momentary surges (The maximum current for one DOCOM (power supply) pin must be 0.7 A or less.) Saturation voltage when turned on : 1.0 V max when the load current is 200 mA Dielectric strength : 24 V +20% or less, including momentary surges Leakage current when turned off : 100 μA or less
External power supply for DO	Power supply voltage : 24 V ±10% Power supply current : (Sum of maximum load current including momentary surges + 100 mA) or more Power–on sequence : Turn on the external power supply at the same time or before turning on the control unit. Power–off sequence : Turn off the external power supply at the same time or after turning off the control unit.

CAUTION

1 Never use the following DO parallel connection.

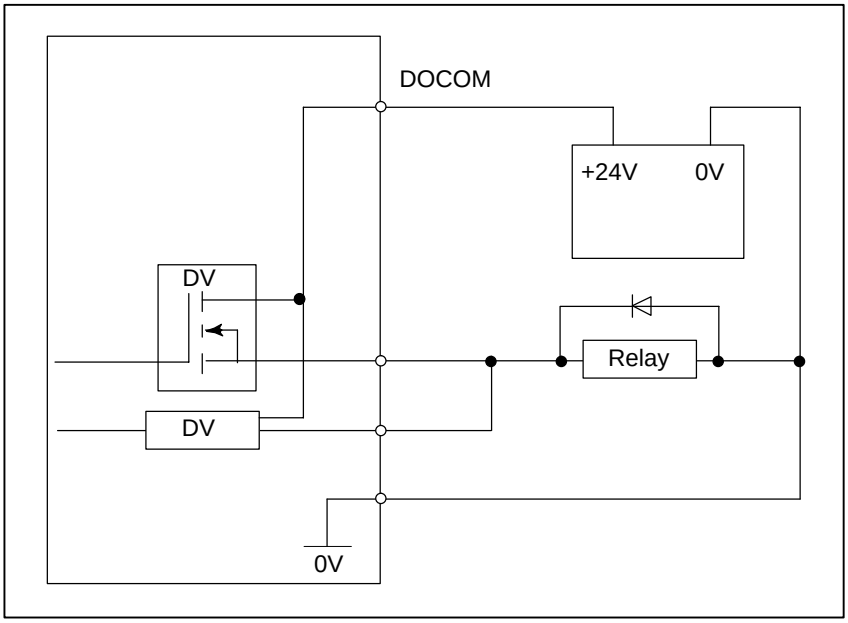

CAUTION

2 When using a dark lighting resistor as shown in the following figure, use a leakage–proof diode.

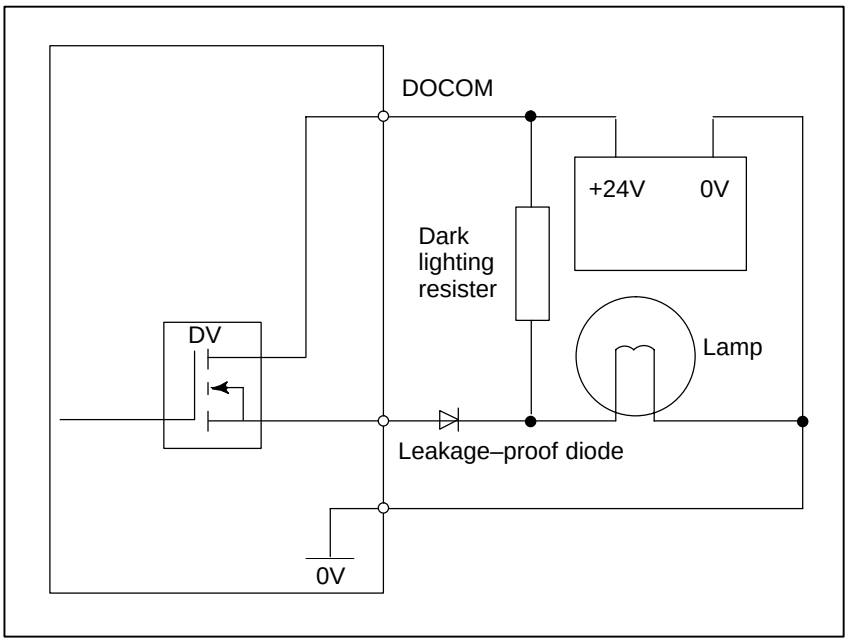

NOTE

Output signal driver

Each of the output signal driver devices used on this I/O board outputs eight signals.

A driver device monitors the current of each output signal. If it detects an overcurrent on an output, it turns off the output. Once an overcurrent causes an output to turn off, the overcurrent is no longer present. Then, the output is turned on again. In ground–fault or overload conditions, outputs may turn on and off alternately. This phenomenon also occurs when a load with a high surge current is connected.

Each driver device contains an overheat detector circuit. If an overcurrent is observed on an output continuously because of a ground–fault or similar reason and the temperature in the device rises, the overheat detector circuit turns off all eight outputs. The output–off state is maintained. This state can be released by logically turning off then on again the outputs after the internal temperature of the device drops to a specified level. This state can also be released by turning off the system power supply.

The output signals of the driver devices are assigned the following addresses:

Device #0: Yn+0.0 to Yn+0.7
Device #1: Yn+1.0 to Yn+1.7
Device #2: Yn+2.0 to Yn+2.7
Device #3: Yn+3.0 to Yn+3.7
Device #4: Yn+4.0 to Yn+4.7
Device #5: Yn+5.0 to Yn+5.7
Device #6: Yn+6.0 to Yn+6.7
Device #7: Yn+7.0 to Yn+7.7

If NC diagnosis shows that an output is on but the output is actually not turned on, an overload on that output or another output in the same device may have turned off the eight outputs of that device. In such a case, turn off the system power supply and remove the cause of the overload.

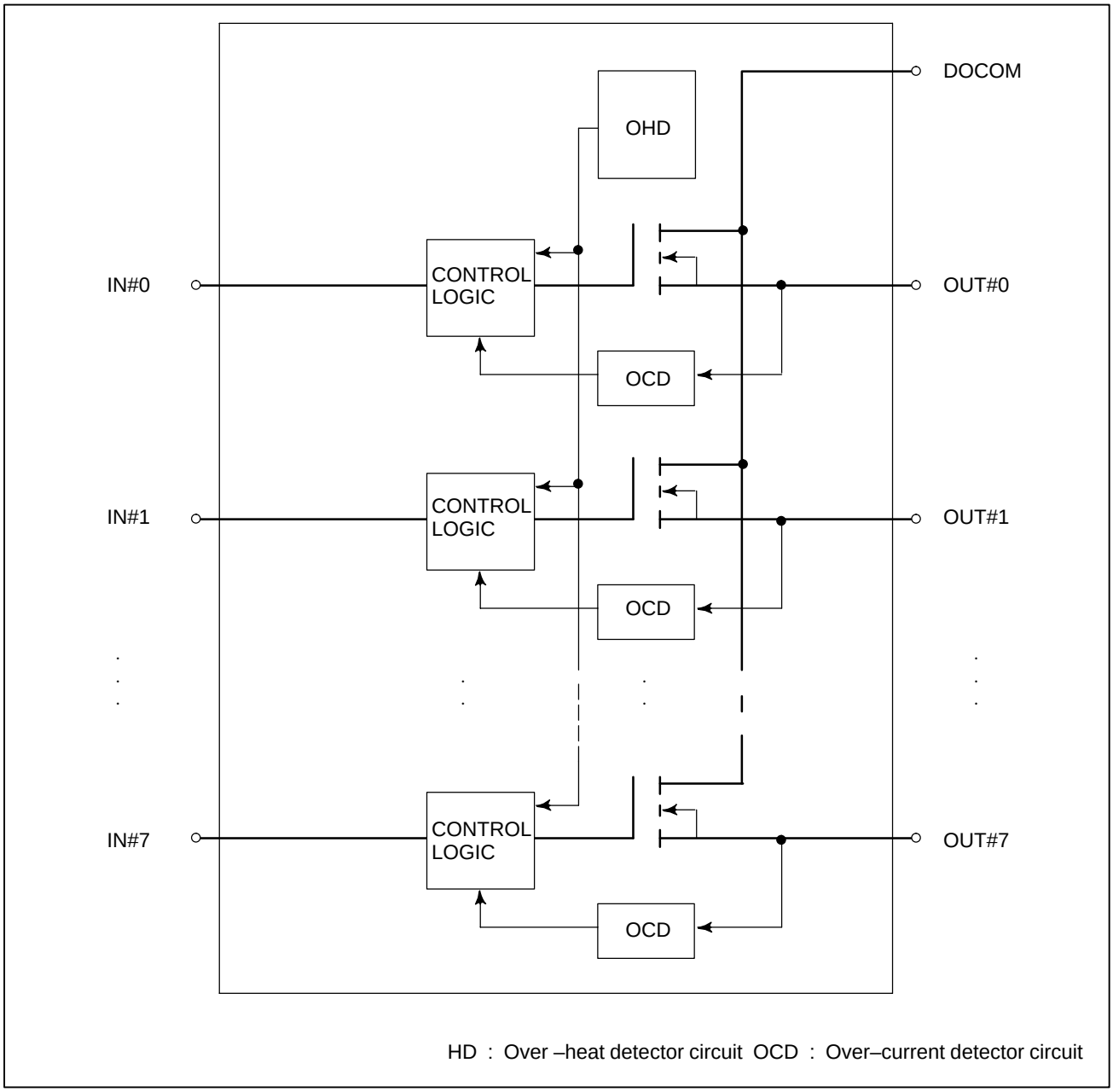
DOCOM
OHD
IN#0
CONTROL LOGIC
OUT#0
OCD
IN#1
CONTROL LOGIC
OUT#1
OCD
IN#7
CONTROL LOGIC
OUT#7
OCD
HD : Over –heat detector circuit OCD : Over–current detector circuit

9.1.7 Connecting the Manual Pulse Generator

Manual pulse generators are used to manually move an axis in the handle feed mode.

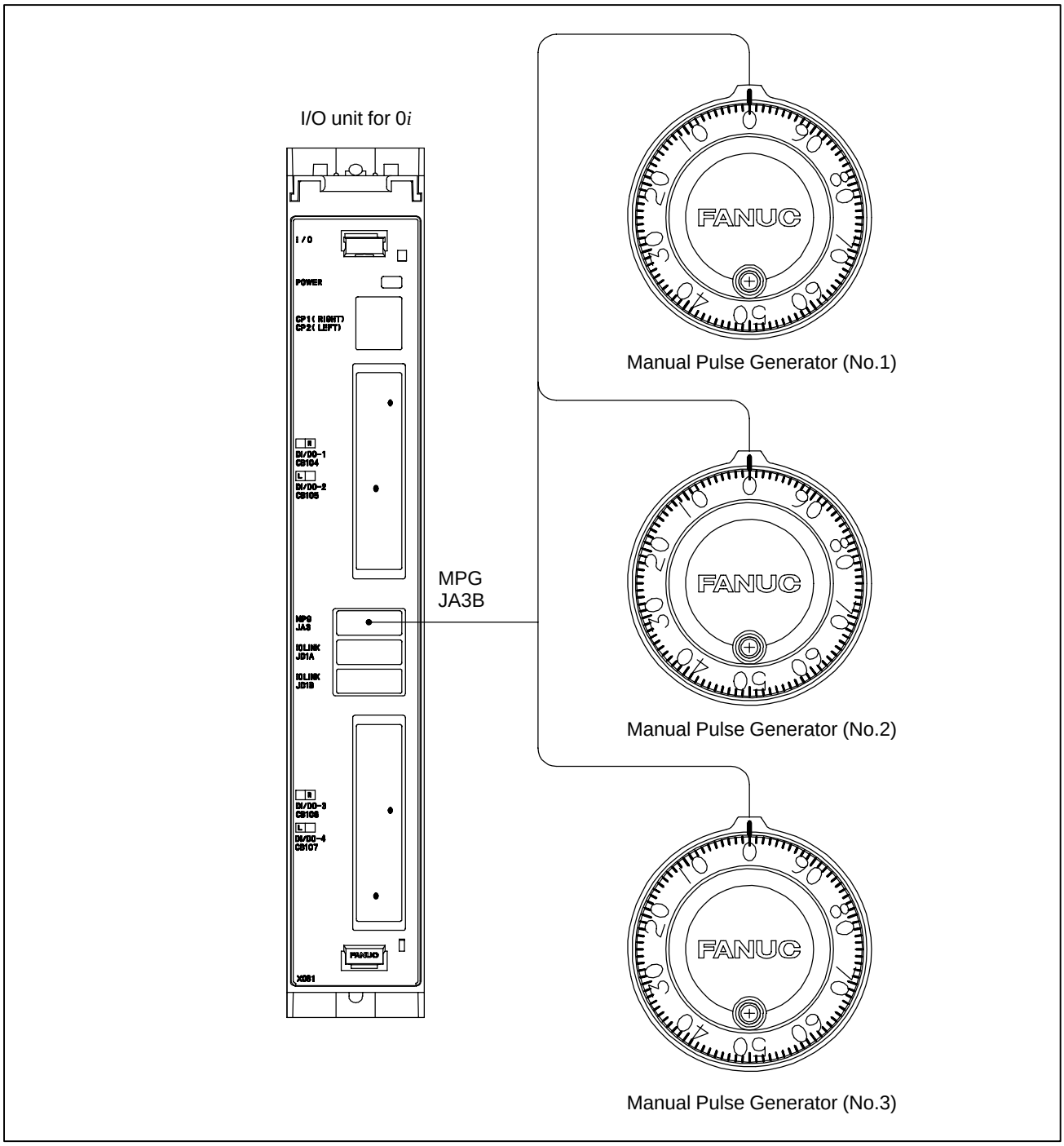

Connection to Manual Pulse Generators

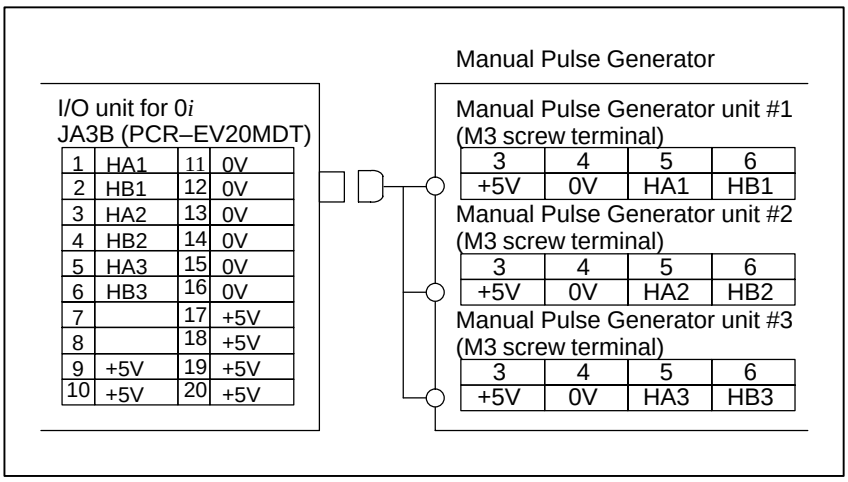

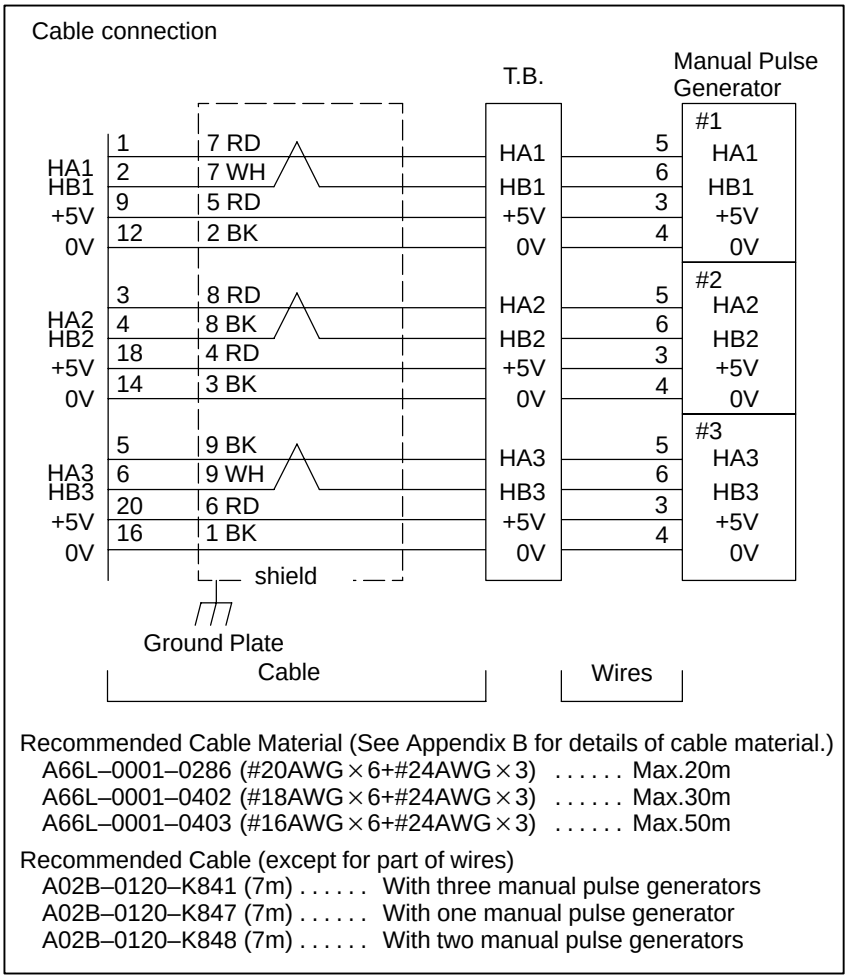

Cable Length When Manual Pulse Generator is Used

Manual pulse generators are supplied with 5 VDC power the same as pulse coders. The drop in voltage due to cable resistance must not exceed 0.2V (on 0V and 5V lines in total).

$$0.2 \geqq \frac{0.1 \times R \times 2L}{m}$$

where 0.1 :Power supply current for the manual pulse generator = 0.1 A
R : Wire resistance per unit length [Ω/m]
m : Number of 0–V wires (= number of 5–V wires)
L : Cable length [m]

Therefore,

$$L \leqq \frac{m}{R}$$

Example: When cable A66L–0001–0286 is used

This cable consists of three pairs of signal lines and six power wires (20/0.18, 0.0394 Ω/m).

When these three cables are used for 0V and 5V lines, the cable length is:

$$L \leqq \frac{3}{0.0394} = 76.75[m]$$

The maximum distance is, however, 50 m for the transmission of a pulse signal from the manual pulse generator. The cable length is, therefore, up to 50 m.

The maximum cable length is 38.37 m when using the two manual pulse generators, or 25.58 m when using the three generators.

Manual Handle Allocation Function

Usually, if two or more units equipped with a manual handle interface are connected with an I/O LINK, the manual handle interface of the first unit connected to the I/O LINK will be automatically enabled.
The use of this function enables the manual handle interfaces of the second and subsequent units. By setting bit 1 of parameter No. 7105, the manual handles associated with the X addresses set in parameters Nos. 12305 to 12307 can be allocated as the first, second, and third manual handles, respectively.
Up to three manual handles can be allocated. For the Series 0*i* Mate–TC, however, up to two manual handles can be allocated.

Connection example

Connection example in which more than one unit equipped with a manual handle interface is connected with an I/O LINK

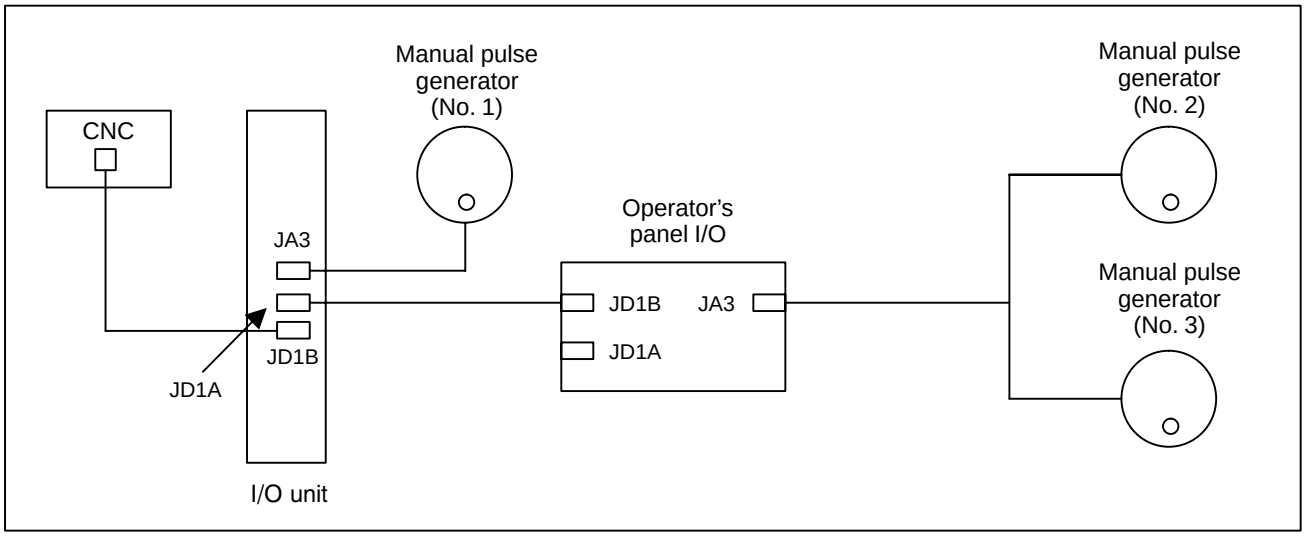

Parameter

	#7	#6	#5	#4	#3	#2	#1	#0
7105							HDX	

[Unit of data] Bit

HDX The manual handles connected with an I/O LINK are:

0 : Automatically allocated in the order in which they are connected to the I/O LINK.

1 : Allocated to the X signal addresses set in the appropriate parameters.

12305	X signal address associated with the first manual handle
12306	X signal address associated with the secnd manual handle
12307	X signal address associated with the third manual handle

[Unit of data] Word

[Valid data range] 0 to 127

Set the addresses of the X signals used with the respective manual handles.
These parameters are effective when HDX, bit 1 of parameter No. 7105, is 1.
The manual handles will not operate if the addresses of the manual handles of the units connected with the I/O LINK are not set correctly.

9.2 CONNECTION TO MACHINE OPERATOR'S PANEL

9.2.1 Overview

This machine operator's panel is connected with CNC by I/O Link, which is composed with the following 2 operator's panels.

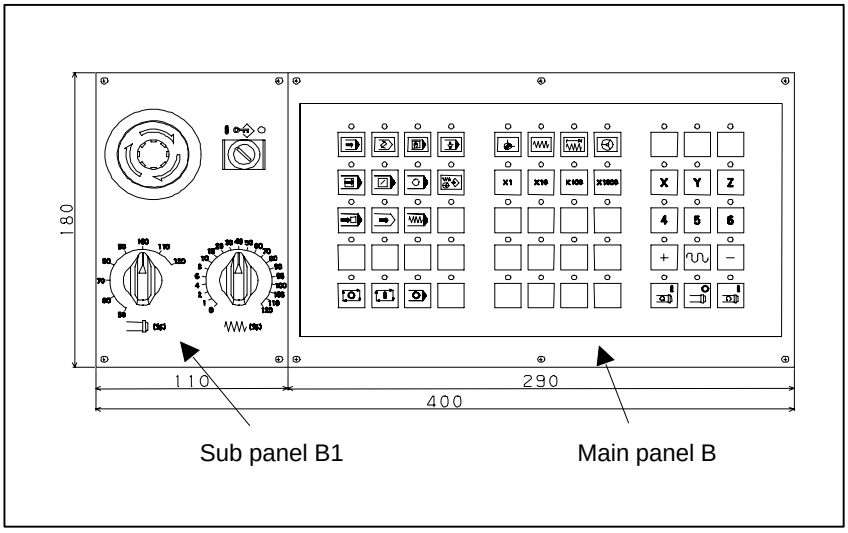

Be sure to see Subsection 9.2.9, for notes on using the keyboard.

9.2.2 Total Connection Diagram

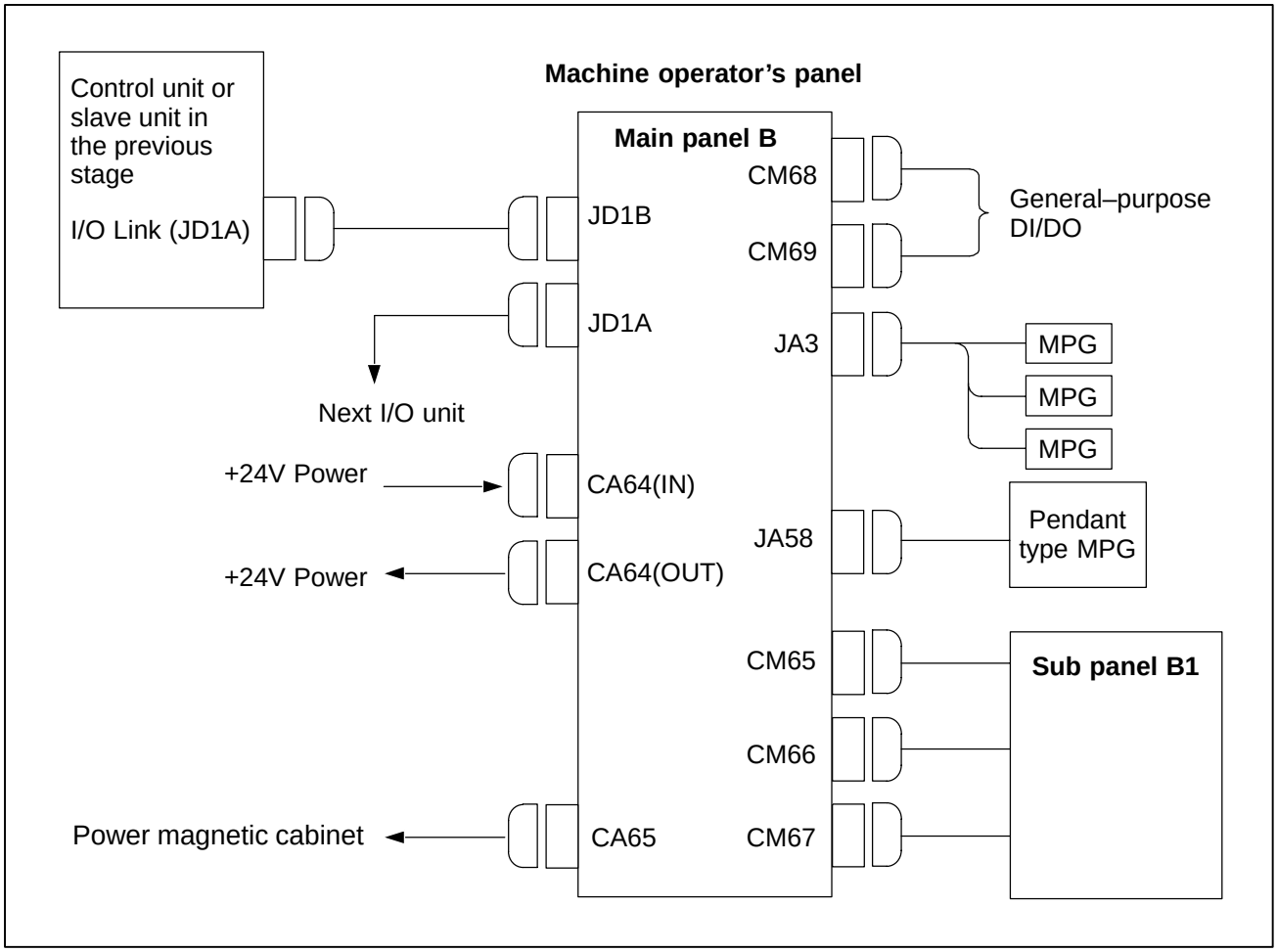

NOTE

1 Usually, CNC is only possible to use the MPG interface on this operator's panel. If CNC uses some I/O unit having MPG interface (ex. Dispersion type I/O module for panel) and this operator's panel, the MPG interface nearest the CNC is only available on the I/O Link connection.
To enable the MPG interface of the second or later unit, use the manual handle assignment function described in Subsection 9.1.7.

2 MPG cannot be connected with either of JA3 and JA58.

9.2.3 Connections

9.2.3.1 Pin assignment

CA64 (Power source)

3		2	0V	1	+24V
6		5	0V	4	+24V

Recommended connector for cable:
Housing: AMP 1–178288–3 (3 pins type)
Contact: AMP 1–175218–5

CM67 (ON/OFF, Program protect, ESP)

A01	EON	B01	EOFF
A02	COM1	B02	COM2
A03	Xm+1.4	B03	KEYCOM
A04	*ESP	B04	ESPCM1
A05	TR1	B05	TR2

Recommended connector for cable:
Housing: AMP 178289–5
Contact: AMP 1–175218–5

CM65 (General–purpose DI)

A01		B01	
A02		B02	Xm+0.5
A03	Xm+0.1	B03	Xm+0.3
A04	+24V	B04	Xm+0.4
A05	Xm+0.2	B05	Xm+0.0

Recommended connector for cable:
Hirose electric: HIF3BA–10D–2.54R

CM68 (General–purpose DI/DO)

A01	+24V	B01	Xm+1.5
A02	Xm+1.6	B02	Xm+1.7
A03	Xm+2.0	B03	Xm+2.1
A04	Xm+2.2	B04	Xm+2.3
A05	Xm+2.4	B05	Xm+2.5
A06	TR3	B06	TR4
A07	TR5	B07	TR6
A08	Yn+5.3	B08	Yn+5.7
A09	Yn+6.3	B08	Yn+6.7
A10	DOCOM	B10	0V

Recommended connector for cable:
Housing: AMP 178289–8
Contact: AMP 1–175218–5

CA65 (Power magnetic cabinet)

A01	EON	B01	EOFF
A02	COM1	B02	COM2
A03	*ESP	B03	ESPCM1
A04	TR1	B04	TR2
A05	TR3	B05	TR4
A06	TR5	B06	TR6
A07	TR7	B07	TR8
A08		B08	
A09		B08	
A10		B10	

Recommended connector for cable:
Hirose electric: HIF3BA–20D–2.54R

CM66 (General–purpose DI)

A01		B01	
A02		B02	Xm+1.3
A03	Xm+0.7	B03	Xm+1.1
A04	+24V	B04	Xm+1.2
A05	Xm+1.0	B05	Xm+0.6

Recommended connector for cable:
Hirose electric: HIF3BA–10D–2.54R

CM69 (General–purpose DI/DO)

A01	+24V	B01	Xm+2.6
A02	Xm+2.7	B02	Xm+3.0
A03	Xm+3.1	B03	Xm+3.2
A04	Xm+3.3	B04	Xm+3.4
A05	Xm+3.5	B05	Xm+3.6
A06	Xm+3.7	B06	DICOM
A07	TR7	B07	TR8
A08	Yn+7.3	B08	Yn+7.4
A09	Yn+7.5	B08	Yn+7.6
A10	DOCOM	B10	0V

Recommended connector for cable:
Housing: AMP 178289–8
Contact: AMP 1–175218–5

NOTE

1 Input/output Pins shaded by ▒ are in pairs. Only one in each pair is usable.
2 Pins shaded by ■ are those for forwarding signals. Pins with the same name are connected directly to one another.

JA3 (Manual pulse generator)

1	HA1	11	
2	HB1	12	0V
3	HA2	13	
4	HB2	14	0V
5	HA3	15	
6	HB3	16	0V
7		17	
8		18	+5V
9	+5V	19	
10		20	+5V

JA58 (Pendant type manual pulse generator)

1	HA1	11	Xm+1.5
2	HB1	12	0V
3	Xm+2.2	13	Xm+1.6
4	Xm+2.3	14	0V
5	Xm+2.4	15	Xm+1.7
6	Xm+2.5	16	0V
7	Yn+5.3	17	Xm+2.0
8	Xm+2.1	18	+5V
9	+5V	19	+24V
10	+24V	20	+5V

Recommended connector for cable of JA3 and JA58

When the depth of the operator's panel is 60mm min.

Recommended connector for cable:
Hirose electric : FI30–20S (Connector)
FI–20–CV7 (Case)

When the depth of the operator's panel is 80mm min.

Recommended connector for cable of JA3:
Hirose electric : FI40B–2015S (Connector)
FI–20–CV (Case)

Recommended connector for cable of JA58:
Honda : PCR–E20FA (Connector)
PCR–V20LA (Case)
Hirose electric : FI30–20S (Connector)
FI–20–CV2 (Case)
Fujitsu : FCN–247J020–G/E (Connector)
FCN–240C020–Y/S (Case)
Molex : 52622–2011 (Connector)
52624–2015 (Case)

9.2.3.2 Power supply connection

To the connector CA64 (IN), shown in the figure below, supply the power necessary for this operator's panel to operate and the power necessary for general–purpose DI. To facilitate power branching, the powers supplied to CA64 (IN) are output directly to CA64 (OUT). If power branching is required, use CA64 (OUT).

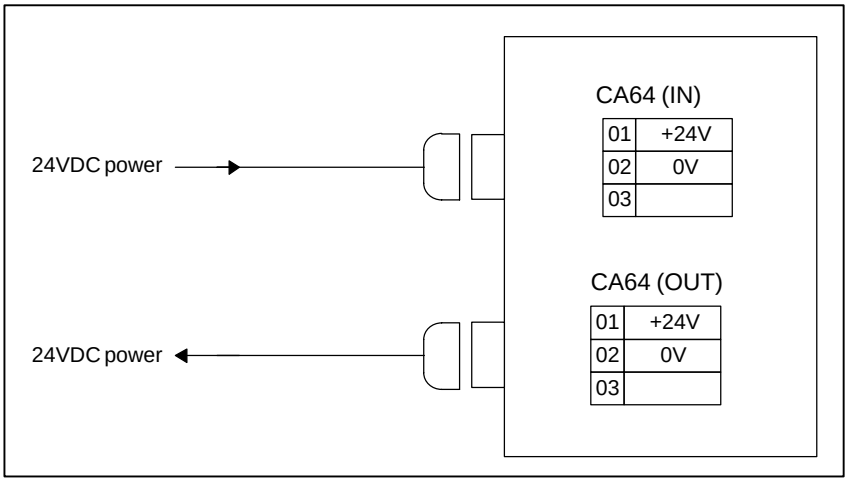

NOTE

1 Both connectors CA64 (IN) and CA64 (OUT) are same specification. And there is not indication of (IN) and (OUT) on the PCB.

2 Power supply for the operator's panel must not turn off at operation. If +24V is turned off at operation, CNC happen to get system alarm (Communication alarm between CNC and operator's panel). +24V for operator's panel must be supplied before or same time CNC power on.

9.2.3.3
I/O link connection

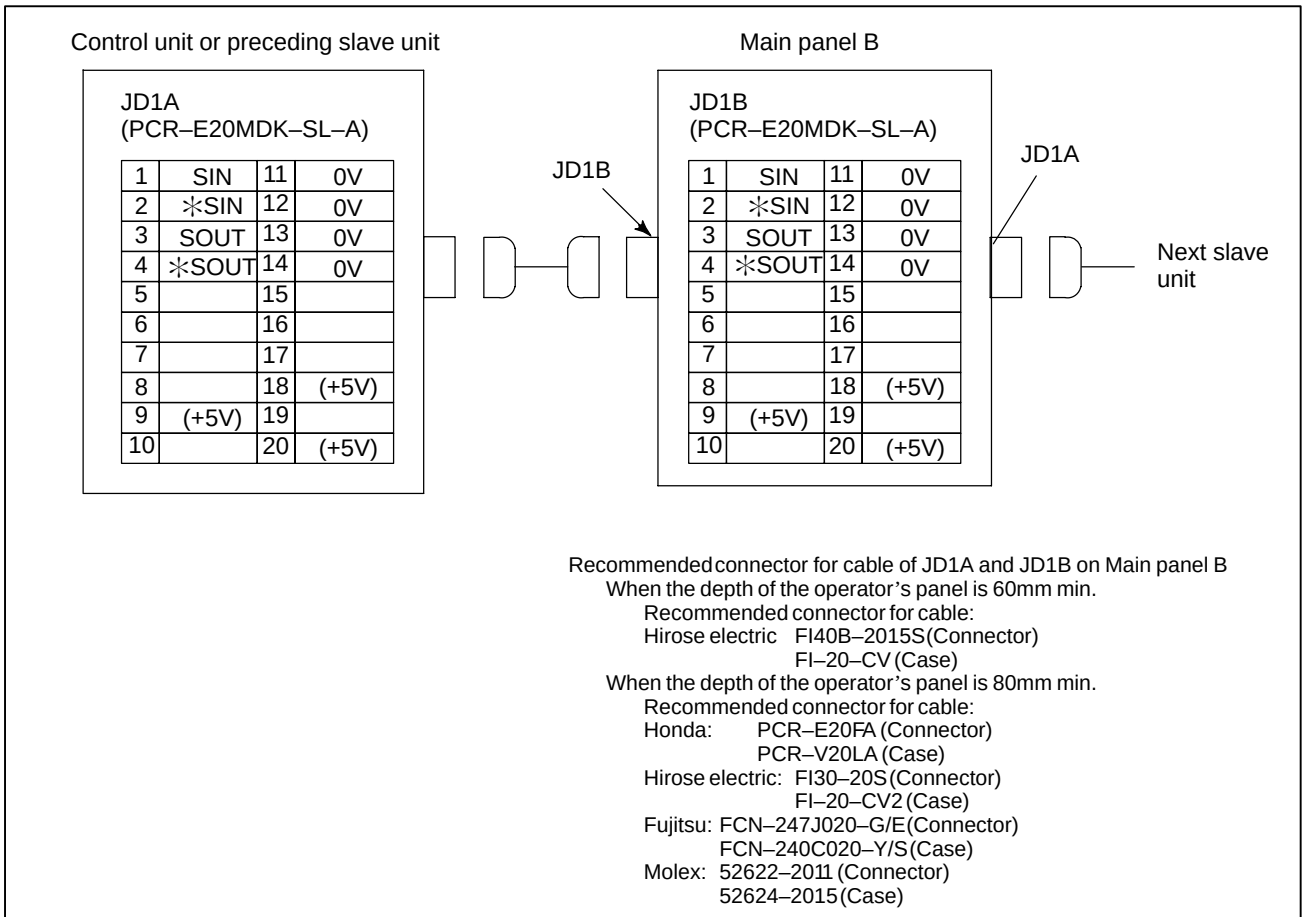

1	SIN	11	0V
2	∗SIN	12	0V
3	SOUT	13	0V
4	∗SOUT	14	0V
5		15	
6		16	
7		17	
8		18	(+5V)
9	(+5V)	19	
10		20	(+5V)

+5V terminals are for an optical I/O Link adapter. They are not necessary when connecting with a metal cable.
If not using the optical I/O link adapter, do not connect the +5 V pin.

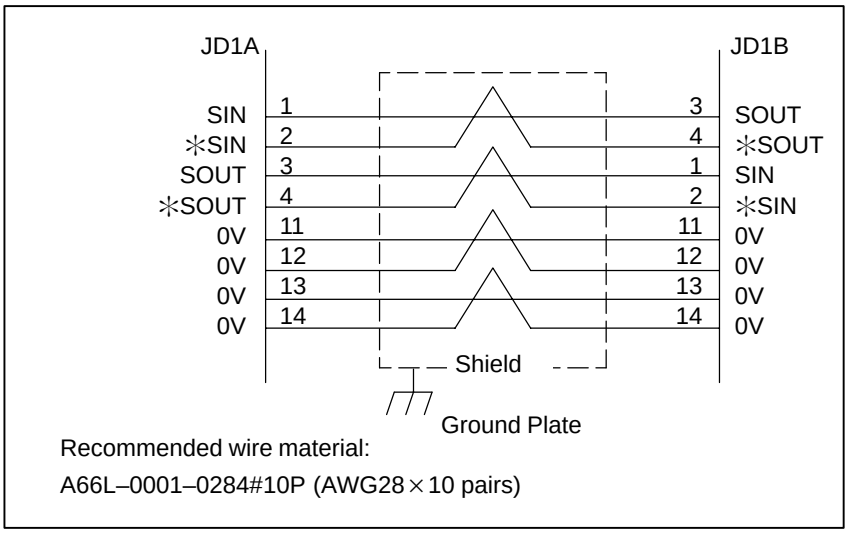

9.2.3.4 Emergency stop signal connection

A signal generated by the emergency stop switch on the machine operator's panel can be sent to the power magnetic cabinet. (This signal cannot be sent to the FANUC I/O Link.)
When MTB uses the Sub panel B1, wiring to the emergency stop switch is contained in the Sub panel.

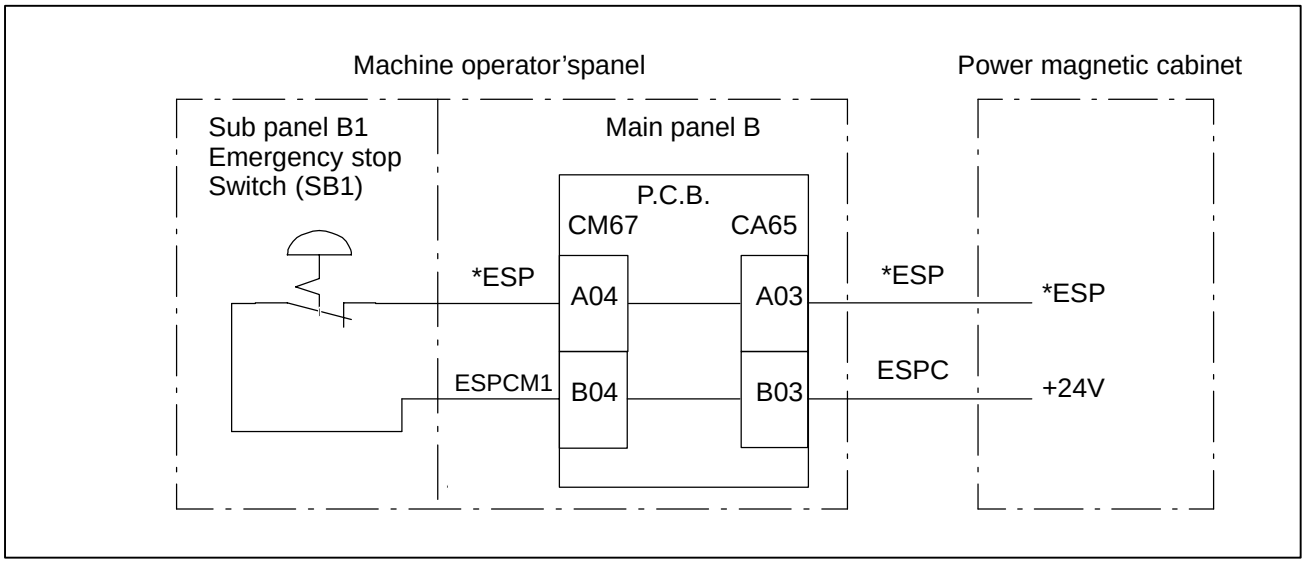

9.2.3.5 Power ON/OFF control signal connection

Signal generated by the power ON/OFF control switches on the machine operator's panel can be sent to the power magnetic cabinet. (This signal cannot be sent to the FANUC I/O Link.)
Sub panel B1 is not included Emergency stop button.

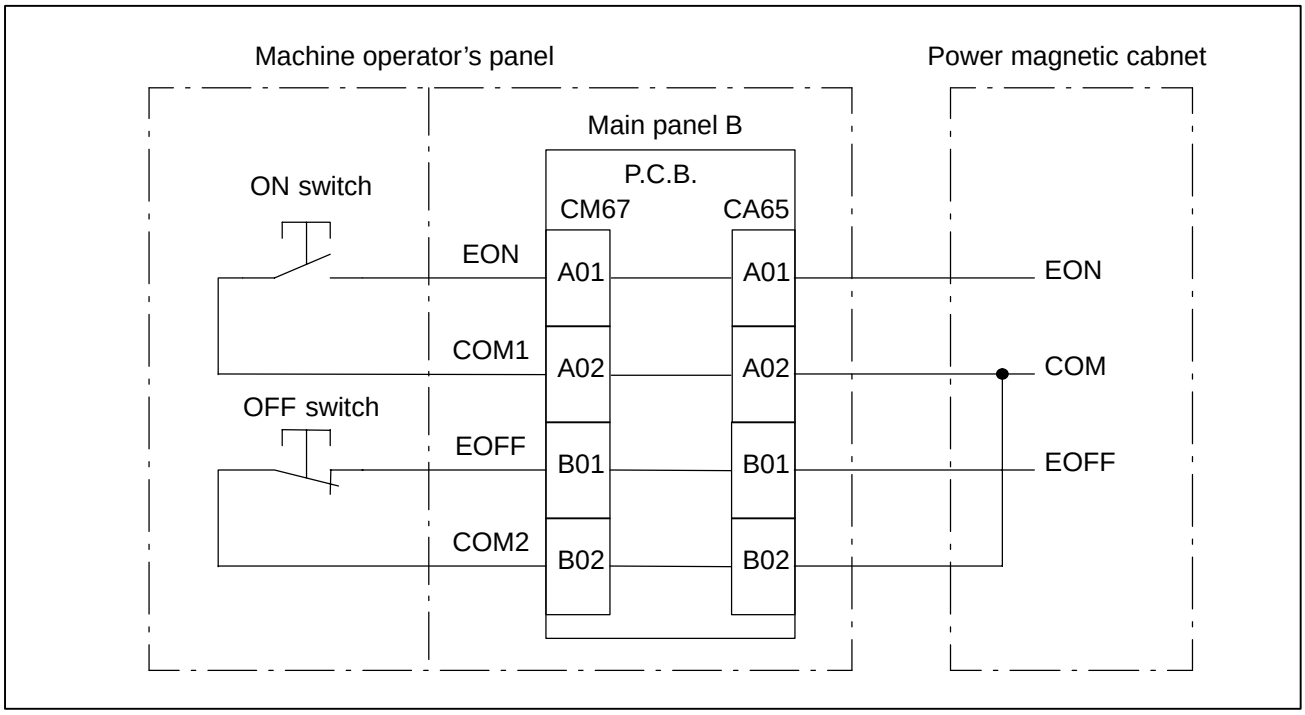

9.2.3.6 General–purpose DI connection

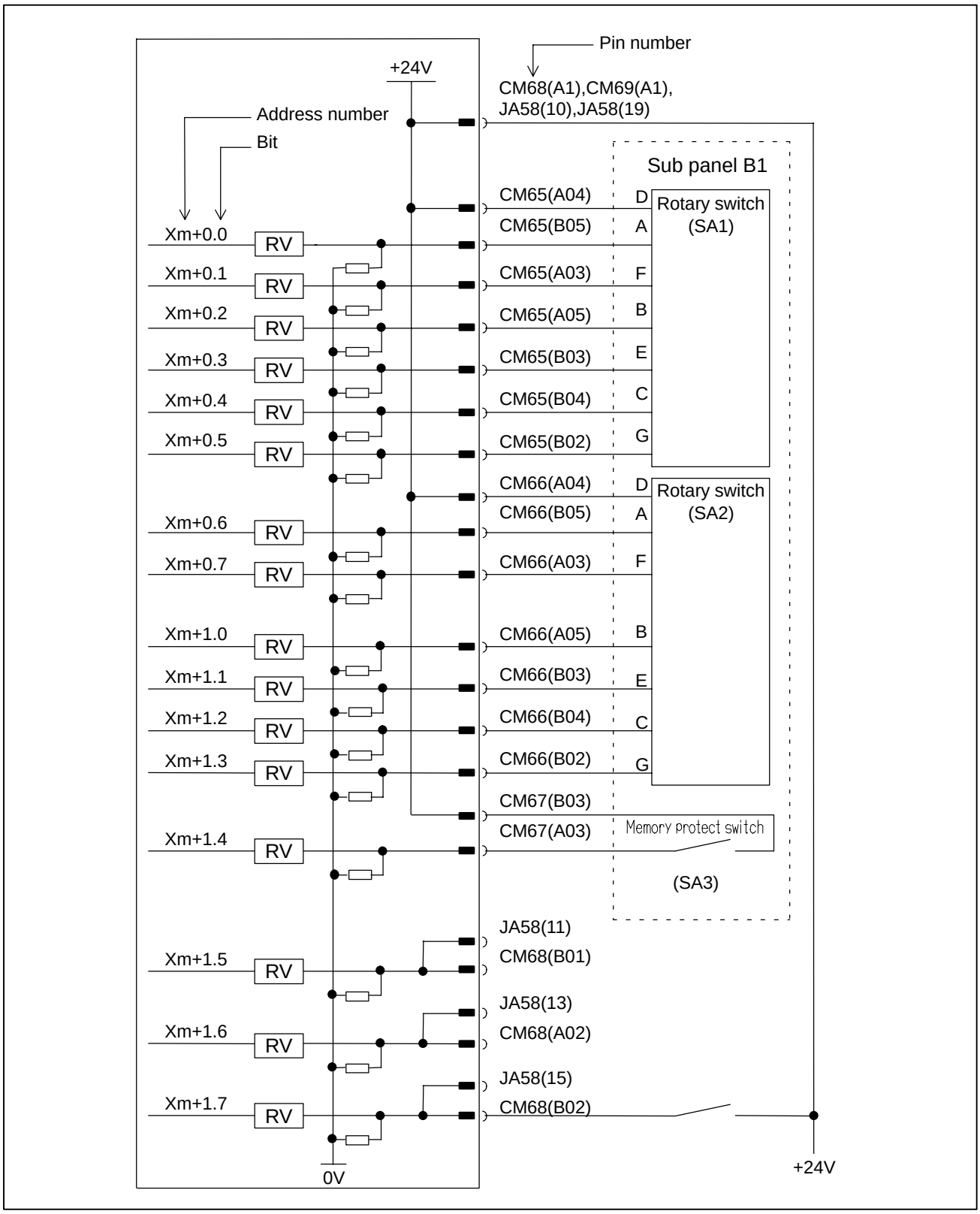

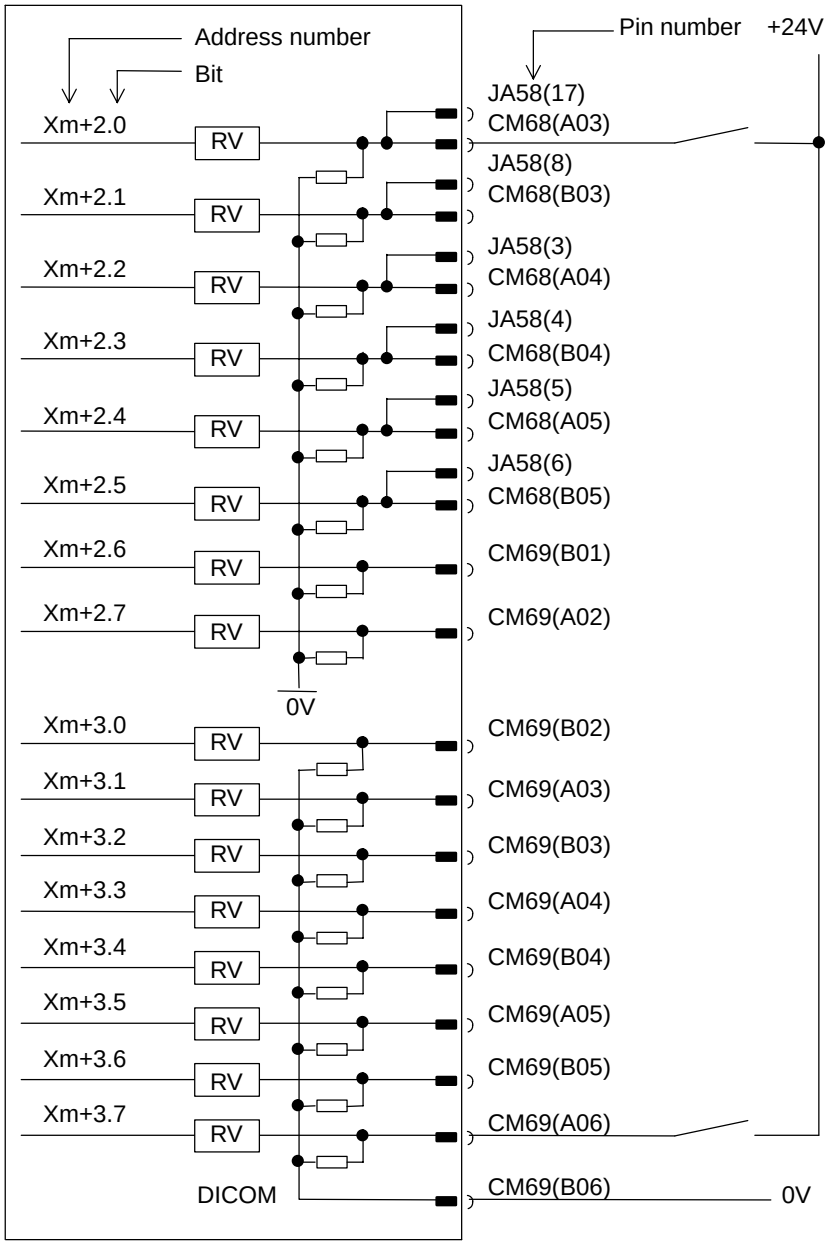

NOTE

1 Xm+3.0 to 3.7 have a common line that is possible to select the source/sink type. If DICOM (CM69–B06pin) is connected to +24V, the DI signal logic is negative. But in this connection, if the DI signal wires happen to drop the ground level, the status of the DI signal is same as the DI signal is “ON”. From the safety viewpoint, DICOM should be connected 0V.

2 Xm+0.0 to 0.7, Xm+1.0 to 1.7 and Xm+2.0 to 0.7 common lines are fixed. So, if these DI pins in this address open, the status of these one stay “0”. And in case of Xm+3.0 to 3.7 which have a selectable common line, if the DICOM(CM69–B06pin) is connected to 0V and these DI pins open, the status of these one stay “0”. And if the DICOM are connected to +24V and these DI pins open, the status of these one stay “1”. And if the DICOM is not connected to 0V or +24V and these DI pins open, the status of these one don’t care.

9.2.3.7 General–purpose DO signal

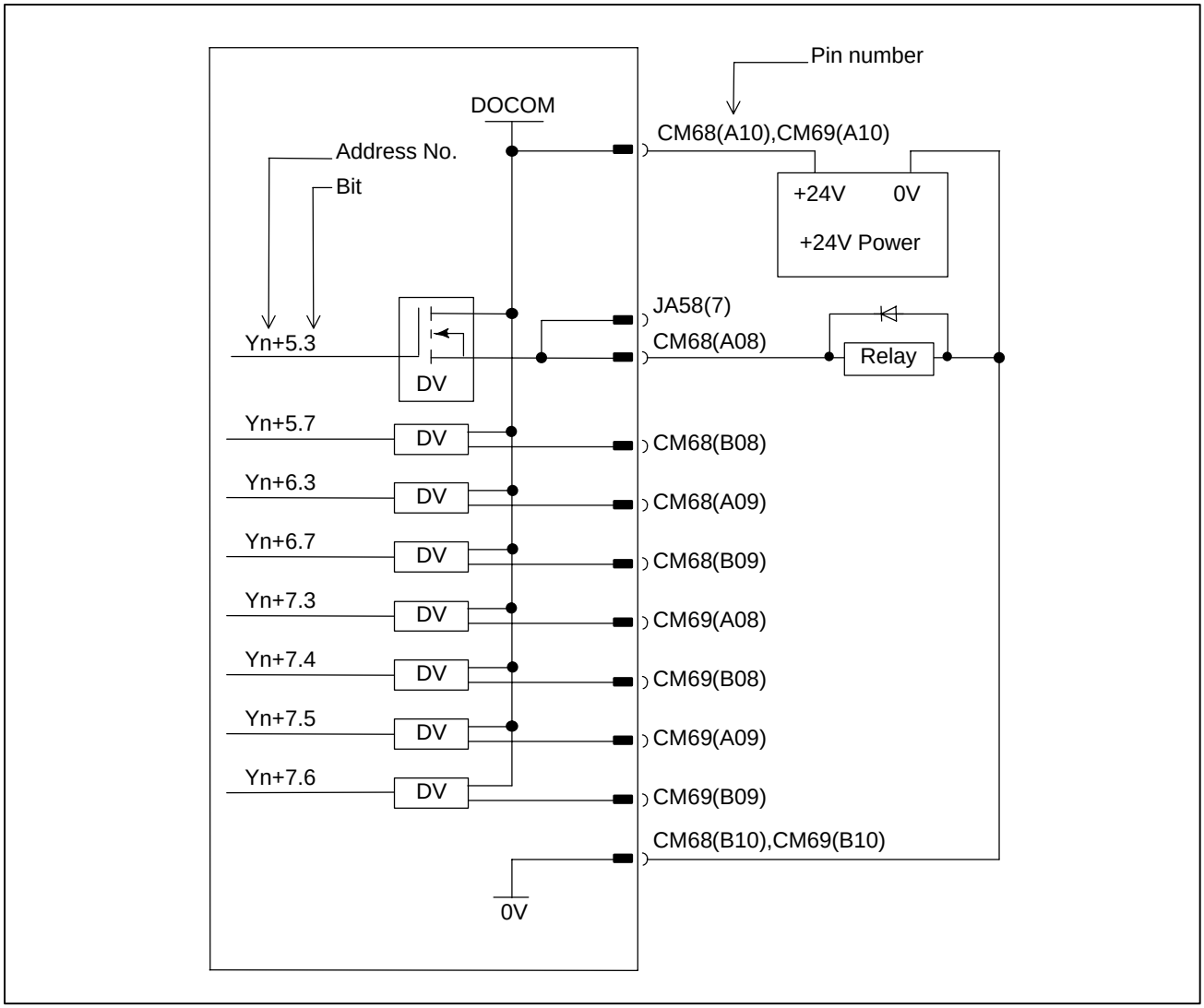

9.2.3.8 Manual pulse generator connection

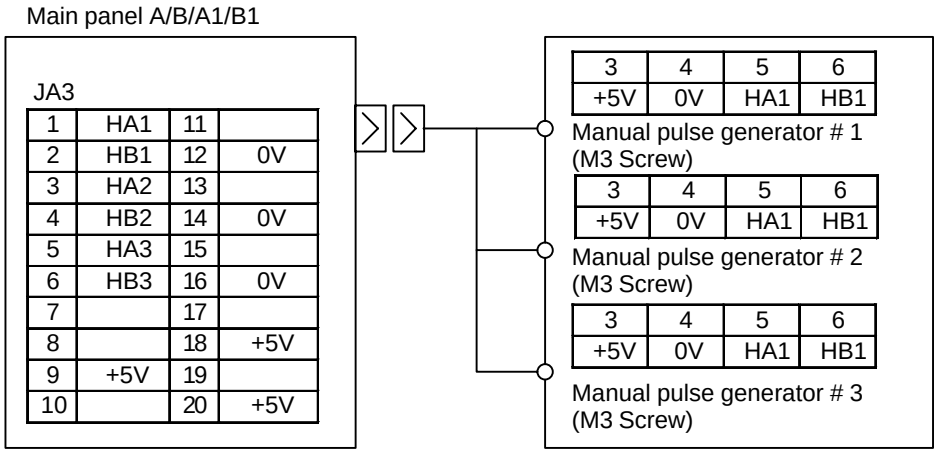

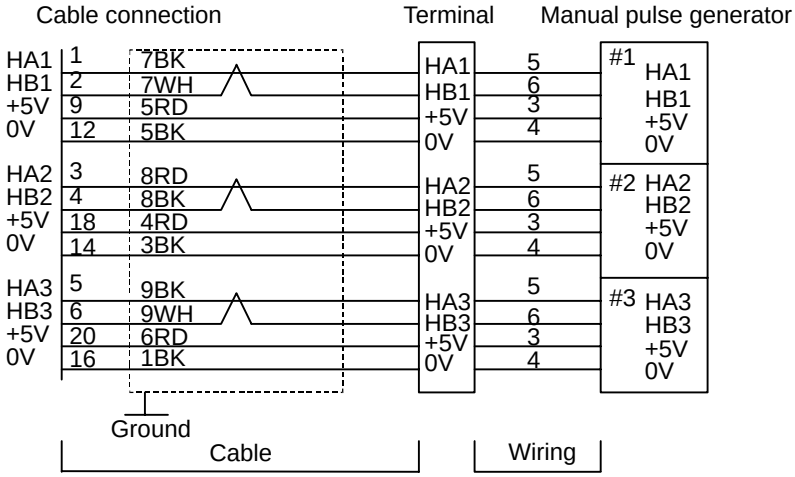

When the depth of the operator's panel is 80mm min.
Recommended wire material : A66L–0001–0286(#20AWGx6+#24AWGx3pairs)
Recommended connector : A02B–0120–K303(Including below connector and case)
(Connector : HIROSE FI40B–2015S Soldering type)
(Case : HIROSE FI–20–CV)
Recommended cable : A02B–0120–K841(7m) (MPG 3 units)
A02B–0120–K848(7m) (MPG 2 units)
A02B–0120–K847(7m) (MPG 1 unit)
(These cables don't include the wiring part in the figure.)

When the depth of the operator's panel is 60mm min.
Recommended wire material : A66L–0001–0284#10P(#28AWGx10pairs)
Recommended connector : A02B–0236–K302(Including below connector and case)
(Connector : HIROSE FI30–20S Stand wire press–mount type)
(Case : HIROSE FI–20–CV7)

NOTE
For an explanation of the length of the cable for the manual pulse generator, see Subsection 9.1.7.

9.2.3.9
When a pendant–type manual pulse generator

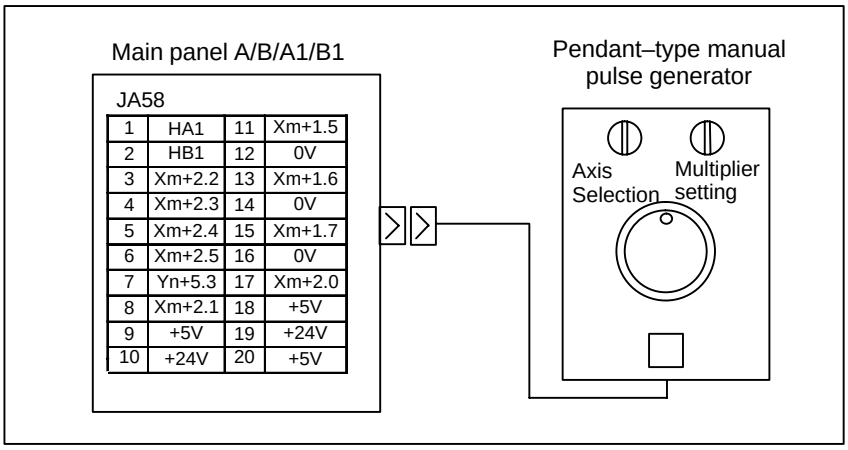

1	HA1	11	Xm+1.5
2	HB1	12	0V
3	Xm+2.2	13	Xm+1.6
4	Xm+2.3	14	0V
5	Xm+2.4	15	Xm+1.7
6	Xm+2.5	16	0V
7	Yn+5.3	17	Xm+2.0
8	Xm+2.1	18	+5V
9	+5V	19	+24V
10	+24V	20	+5V

NOTE

1 When Xm+1.5 to Xm+2.5 of connector JA58 are allocated as the Dis used for the axis selection and multiplier setting, Xm+1.5 to Xm+2.5 of connector CM68 cannot be used.

2 One DO is available for the manual pulse generator side at the user’s direction. When this is used, Yn+5.3 of CM68 cannot be used, as in the case for DIs above.

9.2.3.10 Connector (on the cable side) specifications

Connector	Maker Specification		Order specification
JD1A, JD1B, JA3, JA58 (Operators panel depth=60mmmin.)	Stand wire press–mount type	Hirose FI30–20S (Connector) FI–20–CV7 (Case)	A02B–0236–K302
JD1A, JD1B, JA58 (Operators panel depth=80mmmin.)	Soldering type	Honda PCR–E20FS (Connector) PCR–V20LA (Case)	A02B–0120–K301
		Hirose FI40B–20S (Connector) FI–20–CV2 (Case)	
	Stand wire press–mount type	Honda PCR–E20FA (Connector) PCR–V20LA (Case)	A02B–0120–K302
		Hirose FI30–20S (Connector) FI–20–CV2 (Case)	
JA3 (Operators panel depth=80mmmin.)	Soldering type	Hirose FI40B–2015S (Connector) FI–20–CV (Case)	A02B–0120–K303
CA64 (IN), CA64 (OUT)	AMP 1–178288–3 (Housing) 1–175218–5 (Contact)		A02B–0120–K324
CM67	AMP 178289–5 (Housing) 1–175218–5 (Contact)		A02B–0236–K312
CM68, CM69	AMP 178289–8 (Housing) 1–175218–5 (Contact)		A02B–0236–K313
CM65, CM66	Hirose HIF3BA–10D–2.54R		A02B–0236–K314
CA65	Hirose HIF3BA–20D–2.54R		A02B–0120–K343
CA55	JAV LY10–DC10 (Housing) LY10–C2–3 (Contact)		A02B–0236–K303

9.2.4 I/O Address

9.2.4.1 Keyboard of main panel

I/O address of Keyswitches and LED on the keyboard of Main panel B are as follows.

Key/LED \ BIT	7	6	5	4	3	2	1	0
Xm+4/Yn+0	B4	B3	B2	B1	A4	A3	A2	A1
Xm+5/Yn+1	D4	D3	D2	D1	D4	C3	C2	C1
Xm+6/Yn+2	A8	A7	A6	A5	E4	E3	E2	E1
Xm+7/Yn+3	C8	C7	C6	C5	B8	B7	B6	B5
Xm+8/Yn+4	E8	E7	E6	E5	D8	D7	D6	D5
Xm+9/Yn+5		B11	B10	B9		A11	A10	A9
Xm+10/Yn+6		D11	D10	D9		C11	C10	C9
Xm+11/Yn+7						E11	E10	E9

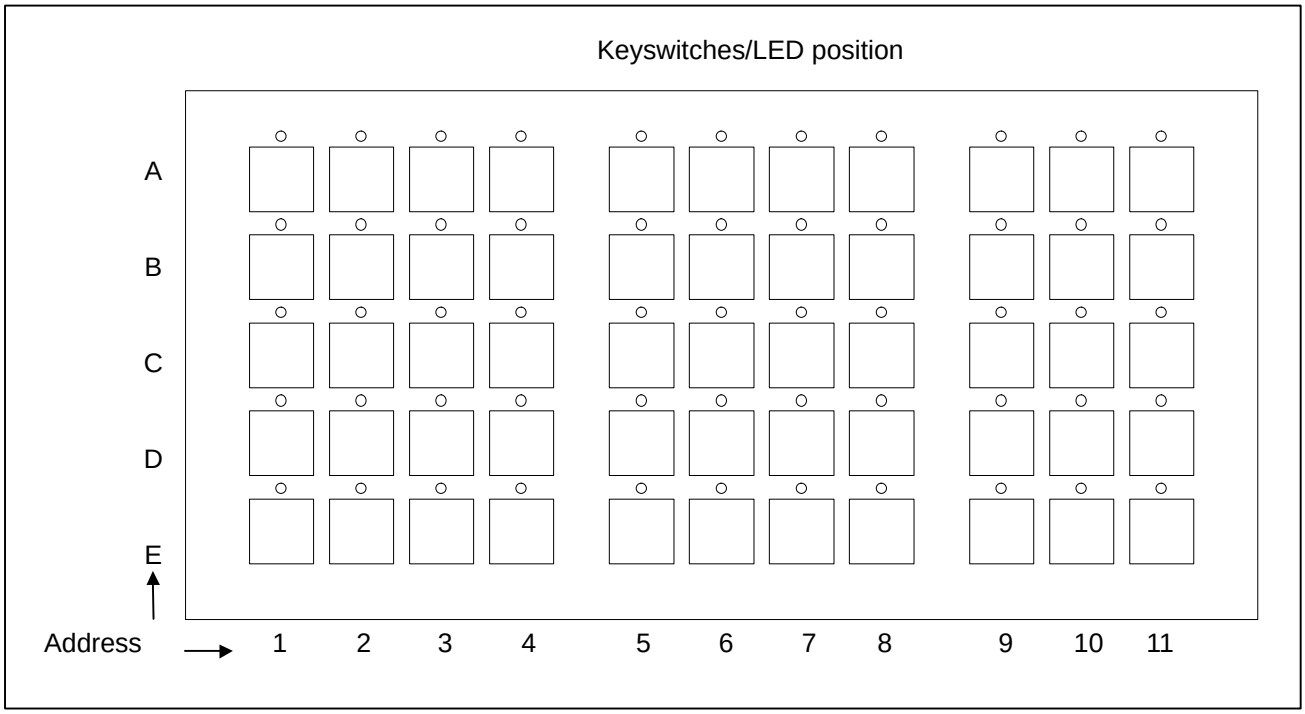

9.2.4.2 Override signals

Table of gray code output is as follows when the Sub panel B1 is used

Rotary switch (SA1)

%	0	1	2	4	6	8	10	15	20	30	40	50	60	70	80	90	95	100	105	110	120
Xm+0.0	0	1	1	0	0	1	1	0	0	1	1	0	0	1	1	0	0	1	1	0	0
Xm+0.1	0	0	1	1	1	1	0	0	0	0	1	1	1	1	0	0	0	0	1	1	1
Xm+0.2	0	0	0	0	1	1	1	1	1	1	1	1	0	0	0	0	0	0	0	0	1
Xm+0.3	0	0	0	0	0	0	0	0	1	1	1	1	1	1	1	1	1	1	1	1	1
Xm+0.4	0	0	0	0	0	0	0	0	0	0	0	0	0	0	0	0	1	1	1	1	1
Xm+0.5	0	1	0	1	0	1	0	1	0	1	0	1	0	1	0	1	0	1	0	1	0

NOTE
Xm+0.5 is a parity bit.

Rotary switch (SA2)

%	50	60	70	80	90	100	110	120
Xm+0.6	0	1	1	0	0	1	1	0
Xm+0.7	0	0	1	1	1	1	0	0
Xm+1.0	0	0	0	0	1	1	1	1
Xm+1.1	0	0	0	0	0	0	0	0
Xm+1.2	0	1	0	1	0	1	0	1
Xm+1.3	0	0	0	0	0	0	0	0

NOTE
Xm+1.2 is a parity bit.

9.2.5 I/O Mapping

I/O address map is as follows.

DI map

Xm+0	General–purpose DI
Xm+1	
Xm+2	
Xm+3	
Xm+4	Keyboard of Main panel (Keyswitches)
Xm+5	
Xm+6	
Xm+7	
Xm+8	
Xm+9	
Xm+10	
Xm+11	
Xm+12 (1st MPG)	MPG
Xm+13 (2nd MPG)	
Xm+14 (3rd MPG)	
Xm+15	Reserve

DO map

Yn+0	Keyboard of Main Panel (LED) Include general–Purpose DO
Yn+1	
Yn+2	
Yn+3	
Yn+4	
Yn+5	
Yn+6	
Yn+7	

9.2.6 Connector Locations of Main Panel B

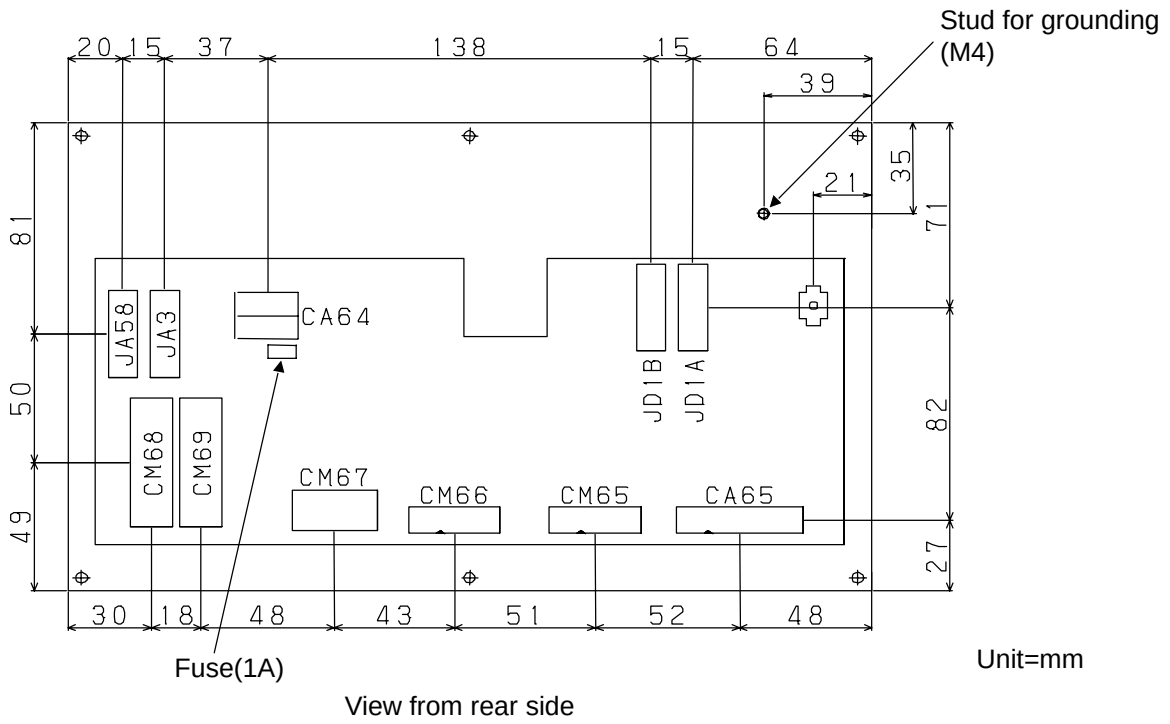

9.2.7 Specifications

9.2.7.1 Environmental requirement

Temperature Around a unit	At operation 0°C to 58°C Storing or transporting –20°C to 60°C
Temperature variance	Max. 1.1°C/min
Humidity	Normally 75% or less (Relative humidity) Short time (Within one month) 95% or less (Relative humidity)
Vibration	Operating 0.5G or less
Atmosphere	Normal FA atmosphere(Consult us when using the system under environments with higher degree of dust, coolant, or organic solution.)

9.2.7.2 Order specification

Name	Specification	Note
Machine operator’s panel Main panel B	A02B–0236–C231	Symbol key
Machine operators panel Main panel B1	A02B–0236–C241	English key
Machine operator’s panel Sub panel A	A02B–0236–C232	
Machine operator’s panel Sub panel B1	A02B–0236–C235	
Set of transparent key tops	A02B–0236–K170	55 transparent key tops
Set of blank key tops	A02B–0236–K171	55 key tops with no symbols printed
Set of symbolic key tops	A02B–0236–K172	34 symbol key tops + 21 blank key tops
Fuse(Spare part)	A03B–0815–K001	1A

9.2.7.3 Main panel B, B1 specification

Item	Specification	Note
General–purpose DI points	32 points	24VDC type input
General–purpose DO points	8 points	24VDC type output, non–insulating
Keyswitches of Machine operator's panel	55 keys	Matrix DI
LED	Color : Green	Attached to all keyswitches, Matrix DO
MPG interface	Max. 3 units	
Interface to CNC	FANUC I/O Link connection	Max. 16 modules or total points max. 1024/1024 will be available.

9.2.7.4 Sub panel A, B1 specification

Item	Sub panel specification		Note
	A	B	
Override rotary switch	2	2	5 bit Gray code output (with a parity bit)
Emergency stop switch	1	1	Number of Contact : 4 (Contact a × 2, Contact b × 2) M3.5 Screw
Program protect key	1	1	
ON/OFF switch	ON/OFF	–	

9.2.7.5 Power supply specification

Voltage	Capacity	Note
24VDC ± 10% (from Power connector CA64, including momentary values) Momentary values and ripples are also included in ± 10%.	0.4A	Including all DI consumption

9.2.7.6 General–purpose DI signal definition

Capacity	30VDC, 16mA or more
Interconnect leakage current in closed circuit	1mA or less (at 26.4V)
Interconnect voltage drop in closed circuit	2V or less (including the voltage drop in the cables)
Delay time	Receiver delay : Max. 2ms Need to consider about the serial communication (I/O Link) delay between CNC and operator's panel 2ms (MAX) + Scan cycle of ladder (Scan cycle is different each CNCs).

9.2.7.7 General–purpose DO signal definition

Maximum load current in ON state	200mA or less (including momentary values)
Saturation voltage in ON state	Max. 1V (When load current is 200mA)
Withstand voltage	24V ± 20% or less (including momentary values)
Leakage current in OFF state	20μA or less
Delay time	Driver delay : Max. 50μs Need to consider about the serial communication (I/O Link) delay between CNC and operator's panel 2ms (MAX)+Scan cycle of ladder (Scan cycle is different each CNCs).

9.2.8 Key Symbol Indication on Machine Operator's Panel

9.2.8.1 Meaning of key symbols

Symbol indication	Meaning of key
	AUTO mode selection signal; Sets automatic operation mode.
	EDIT mode selection signal; Sets program edit operation mode.
	MDI mode selection; Sets MDI mode.
	DNC operation mode; Sets DNC operation mode.
	Reference position return mode selection; Sets reference position return mode.
	JOG feed mode selection; Sets jog feed mode.
	Step feed mode selection; Sets step feed mode.
	Manual handle feed mode selection; Sets manual handle feed mode.
	Teach–in jog (reach–in handle) mode selection signal; Sets teach–in jog (teach–in handle) mode.
	Single block signal; Executes program one by one. This key is used to check a program.
	Block delete; Skips the execution of the blocks ending with the end of block (;) when this button is pressed during automatic operation.
	Program stop(output only); Turns on the LED on the button when automatic operation is stopped by M00 specified in the program.
	Optional stop; Stops automatic operation after execution of the block of a program where M01 is specified in the program.

Symbol indication	Meaning of key
	Program restart; A program may be restart at a block by specifying the sequence number of the block, after automatic operation is stopped because of a broken tool or for holidays.
	Dryrun; Sets the axis feedrate to the jog feedrate instead of a programmed feedrate when automatic operation is performed by setting this button to on. This function is used to check only the movement of the tool when no workpiece is mounted.
	Machine lock; Updates only position display on the screen without making any axis movement, when automatic operation is performed by setting this button to on. This function is used to check a program.
	Cycle start; Start automatic operation.
	Cycle stop; Stops automatic operation.
X1 X10 X100 X1000	Manual handle feed magnification: Magnification for manual handle feed. Magnified by 1, 10, 100, 1000.
X Y Z 4 5 6	Manual feed axis selection; Axes are selected, when these buttons are set to on in the jog feed mode or step feed mode.
+ −	Manual feed operation; Performs movement along selected axes when these buttons are set on in the jog feed mode or step feed mode.
	Traverse; Performs jog feed at rapid traverse rate when this button is set to on.
	Positive spindle rotation direction; Rotates the spindle motor in the positive direction.
	Negative spindle rotation direction; Rotates the spindle motor in the negative direction.
	Spindle stop; Stops the spindle motor rotation.

9.2.8.2 Detachable key top

Keyboard of main panel B has 55 keys. All key tops are detachable. MTB can customize keys and make his original key layout easily. And using transparent key top (optional), a film sheet with marking is inserted into the key.

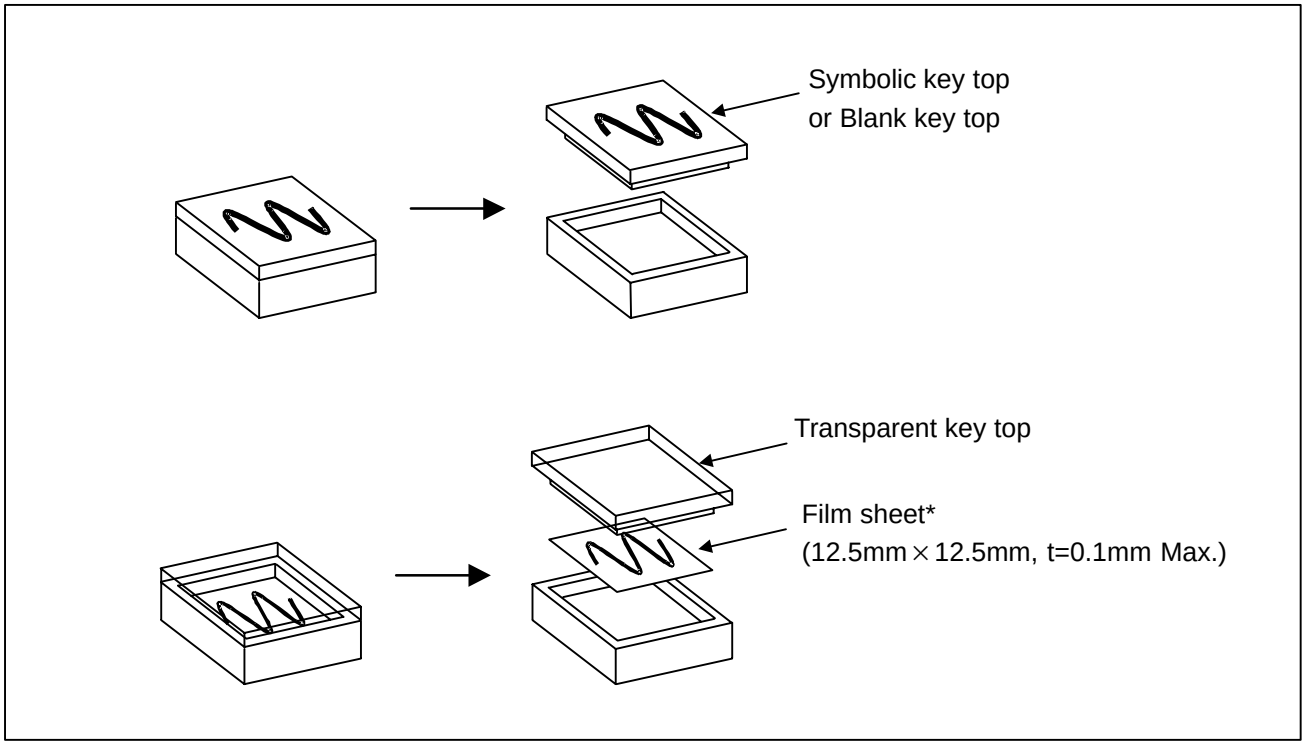

NOTE

* Use the oil–proof sheet in the environment which oil is used for.

9.2.9 Others

The keyboard of this operator's panel is a matrix composition. When three or more keys are pushed, the bypass current cause unrelated key to be available. Measures against the malfunction must be taken in the ladder program.
One example is shown as follows.

(Elimination rule of malfunction)
When three keyinputs or more is input, all the keyinput since the third is made invalid.
However, when the number of all keyinput becomes two or less because keyinput was lost, all keyinputs are made effective.

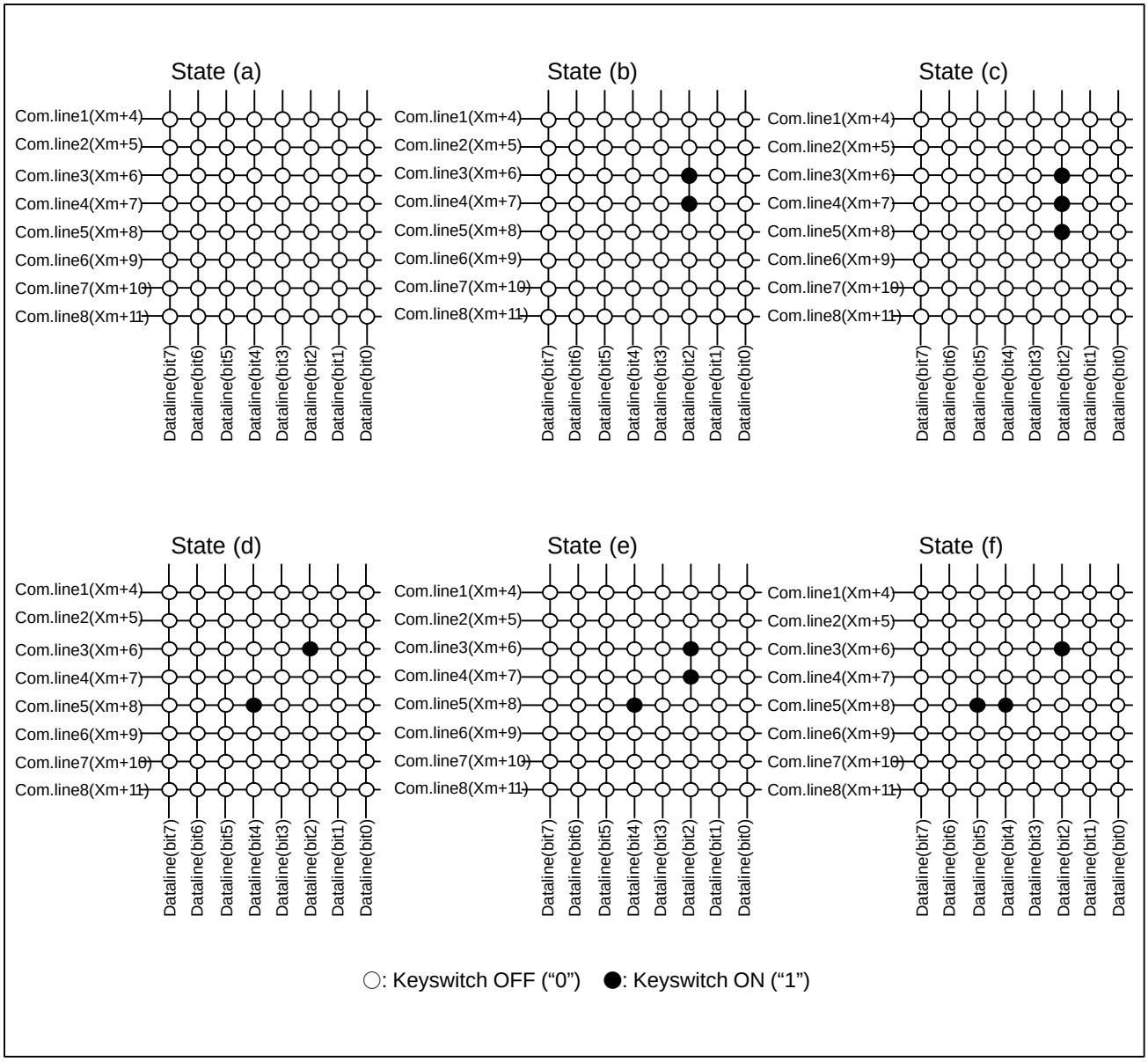

(Operation of ladder program)
The example of the operation of ladder program is shown about matrix DI composed of 8bits x 8commons as follows.

[1] The number of datalines where the keyinput exists is examined.

Logical add R1 of the data of all addresses is calculated. The number of bits which are “1” in the 8bits data of R1 corresponds to the number of datalines where the keyinput exists.

(1) When the data of R1 is corresponding to 00h, there is no bit which is “1” in the data of R1.

Ex. State (a): R1 = (00000000)
→ There is no dataline where input exists.

(2) when the data of R1 is corresponding to the data in undermentioned datatable 1., the number of bits which are “1” in the data of R1 is one. Similarly, when the data of R1 is corresponding to the data in datatable 2., the number of bits which are “1” in the data of R1 is two.

Ex. State (b) or (c): R1 = (00000100)
→ There is one dataline where input exists.

Ex. State (d) or (e): R1 = (00010100)
→ There are two datalines where input exists.

(3) If the data of R1 is not corresponding to 00h and the both datatables, the number of bits which are “1” in the data of R1 is three or more.

Ex. State (f): R1 = (00110100)
→ There are three datalines where input exists.

Data table 1.

00000001	00000010
00000100	00001000
00010000	00100000
01000000	10000000

Data table 2.

00000011	00000110	00001100	00011000
00110000	01100000	11000000	10000001
00000101	00001010	00010100	00101000
01010000	10100000	01000001	10000010
00001001	00010010	00100100	01001000
10010000	00100001	01000010	10000100
00010001	00100010	01000100	10001000

[2] Judgment 1

(1) If there is no dataline where the keyinput exists.

→ Any key switch is not pushed.: Ex. State (a)

(2) When the keyinput exists in two datalines or less.

→ To [3]

(3) When the keyinput exists in three data lines or more.

→ There are three keyinputs or more.
It is invalid keyinput.: Ex. State (f)

[3] When the keyinput exists in two datalines or less, it is examined whether two or more keyinput exists on the same dataline.

The data of all addresses is subtracted from logical add R1 and subtraction result R2 is obtained. There are no two or more keyinput on the same dataline if it is R2 = 00h.

Ex. When there is one dataline where input exists.

State (b) : R2 = FCh

State (c) : R2 = F8h

When there are two datalines where input exists.

State (d) : R2 = 00h

State (e) : R2 = FCh

[4] Judgment 2

(1) In case of R2 = 00h → There are two or less datalines where input exists, and there are no two or more keyinputs on the same dataline. In this case, the numbers of all keyinputs are one or two. It is effective keyinput.:
Ex. State (d)

(2) In case of R2 ≠ 00h → There are two or less datalines where input exists, and two or more keyinputs exists on the same dataline.
To [5].

[5] Judgment 3

When there is one dataline where input exists
→ To [6].

When there are two datalines where input exists
→ There are three keyinputs or more.
It is invalid keyinput.:
Ex. State (e)

[6] Subtraction result R2 is added to logical add R1. If this addition result is 00h, the number of all keyinputs is two.

Ex. State (b) : R1 + R2 = 04h + FCh = 00h
State (c) : R1 + R2 = 04h + F8h = FCh

[7] Judgment 4

In case of R1 + R2 = 00h → There is one dataline where input exists, and there are two keyinputs on this dataline. That is, because the numbers of all input are two keys, it is effective input.: Ex. State (b)

In case of R1+R2 ≠ 00h → There are three keyinputs or more on the same dataline. It is invalid keyinput.: Ex. State (c)

[8] Only when the keyinput becomes effective because of judgment 1–4, all DI data (Xm+4–Xm+11) is used by the ladder program.

9.3 CONNECTION TO THE SMALL MACHINE OPERATOR'S PANEL

9.3.1 Overview

The small machine operator's panel is a machine operator's panel connected to the CNC with an I/O Link. The operator's panel contains 30 keys, an emergency stop switch, and two override rotary switches. Be sure to see Subsection 9.3.11, for notes on using the keyboard.

9.3.2 Overall Connection Diagram

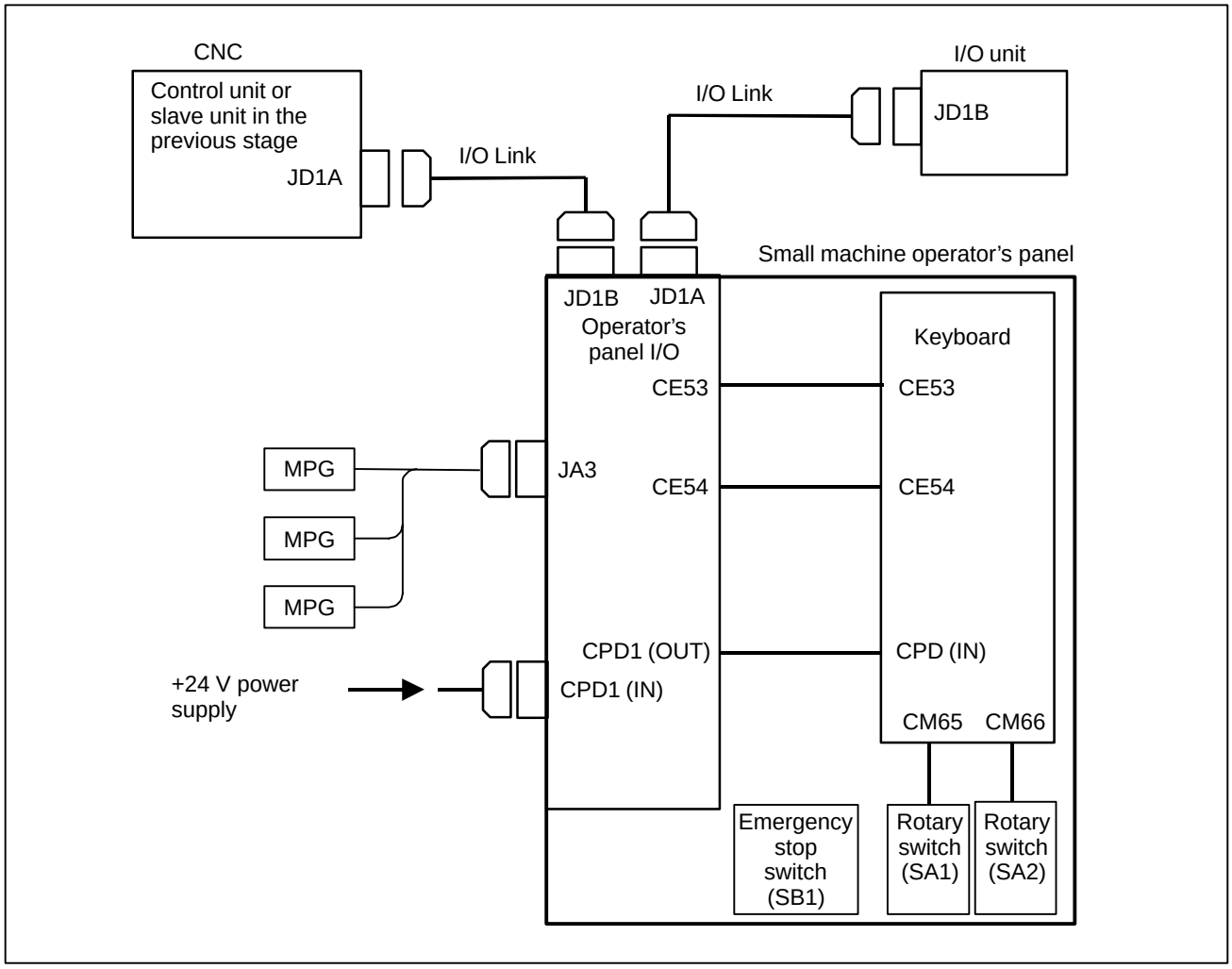

NOTE

1 If this operator's panel is used together with a unit (such as an I/O module for branching) connected to an I/O Link having another MPG interface, only the MPG interface of the unit (module) nearest the CNC connected to the I/O Link will be enabled by default. To enable the MPG interfaces of the second and subsequent units, set appropriate parameters. For details, refer to the manual supplied with the NC used.

2 The following screw–on connectors cannot be used for the connection of an I/O Link and manual pulse generator.
Connectors that cannot used on the cable side

	Specification	Manufacturer
Connector case	FI–20–CV7	Hirose Electric Co., Ltd.
Connector case and connector	FI30–20S–CV7	Hirose Electric Co., Ltd.

9.3.3 Connection of Each Section

9.3.3.1 Power connection

To the CPD1 connector, shown in the figure below, supply the power necessary for this operator's panel to operate, as well as the power for the general–purpose DI.

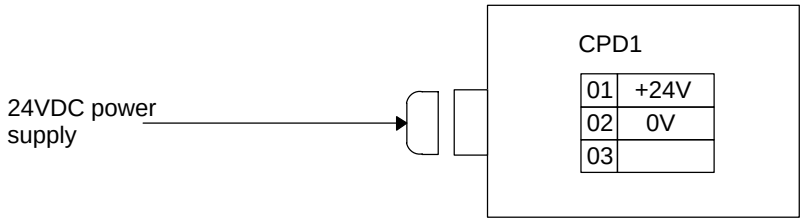

Recommended connector for use on the CPD1 cable side:
A02B–0120–K324 (including the following connector housing and contact)
Housing: Japan AMP 1–178288–3 (3 pins)
Contact: Japan AMP 1–175218–5

NOTE

The +24V power supplied to this connector must be turned OFF during operation. Turning it OFF will cause a CNC communication alarm to be generated. Make sure that at power ON, the supply of this +24V power is at the same time as or earlier than the supply of the power to the CNC and that at power OFF, it is at the same time as or later than the interruption of the power to the CNC.
When the CNC connected to this operator's panel with an I/O Link is to be turned off, the power to this operator's panel must also be turned off.

9.3.3.2 Emergency stop switch

The emergency stop switch has contact A in two circuits and contact B in two circuits. (This signal is not sent to the CNC with a FANUC I/O Link.)
The machine tool builder is required to connect the switch to other DI/DO devices.

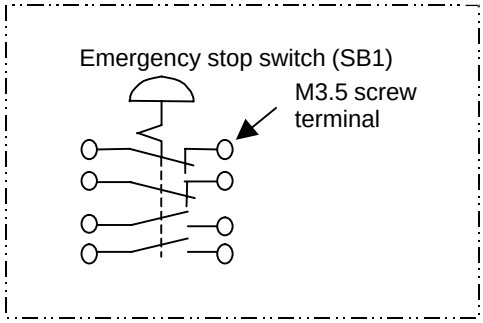

9.3.3.3 I/O Link connection

See Subsection 9.2.3.3.

9.3.3.4 Manual pulse generator connection

An example in which three manual pulse generators are connected is given below. If this operator's panel is used together with a unit (such as an I/O module for connection) connected to an I/O Link having another MPG interface, only the MPG interface of the unit (module) nearest the CNC connected to the I/O Link will be enabled by default. To enable the MPG interfaces of the second and subsequent units, set appropriate parameters. For details, refer to the manual supplied with the CNC used.

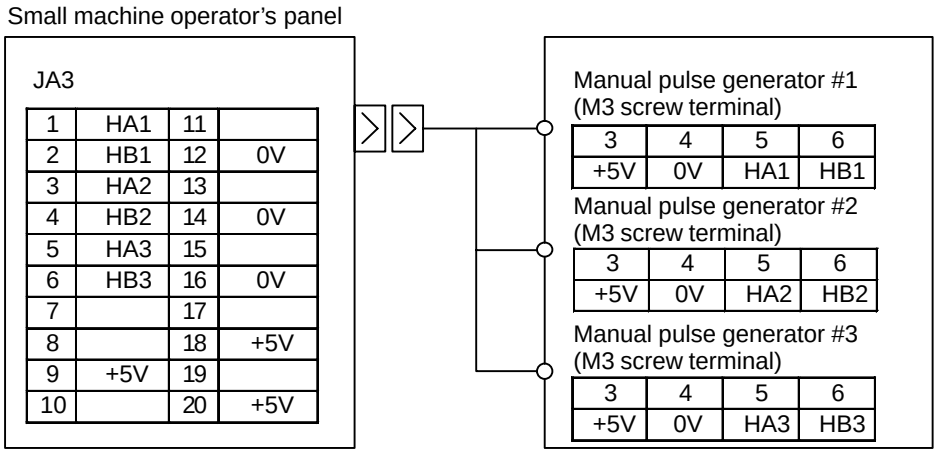

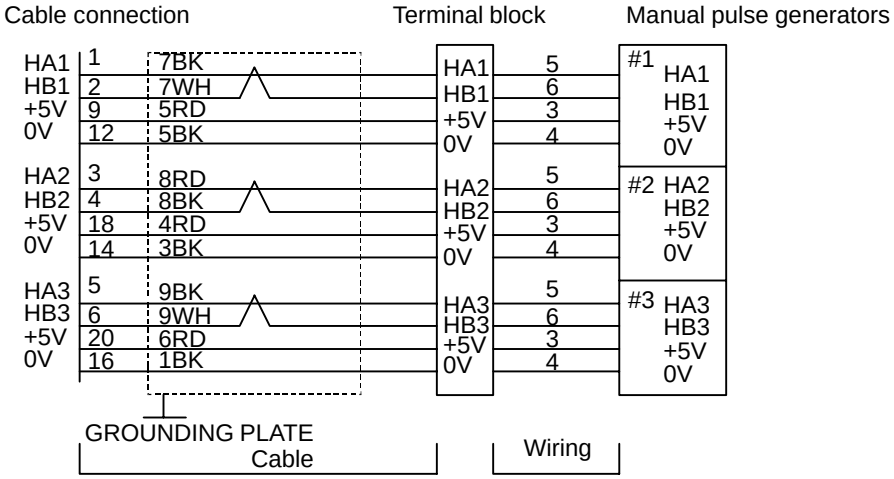

Recommended wire material: A66L–0001–0286 (#20 AWG × 6 + #24 AWG × 3 pair)
Recommended connectors: A02B–0120–K303 (including the following connector and case)
(Connector: Hirose Electric FI40B–2015S Soldering type)
(Case: Hirose Electric FI–20–CV)
Recommended cable: A02B–0120–K841 (7 m) (cable for three manual pulse generators)
A02B–0120–K848 (7 m) (cable for two manual pulse generators)
A02B–0120–K847 (7 m) (cable for one manual pulse generator)

(These cables are not used for the connection in the portion indicated by "Wiring".)

Calculate the maximum allowable length of the cable for the manual pulse generator, with the method described below.

Manual pulse generators are supplied with 5 VDC power. The drop in voltage due to cable resistance must not exceed 0.2V (on 0V and 5V lines in total).

$$0.2 \geqq \frac{0.1 \times R \times 2L}{m}$$

Where
0.1 : Power supply current for the manual pulse generator = 0.1 A
R : Wire resistance per unit length [Ω/m]
m : Number of 0–V wires (= number of 5–V wires)
L : Cable length [m]

Therefore,

$$L \leqq \frac{m}{R}$$

Example: When cable A66L–0001–0286 is used

This cable consists of three pairs of signal lines and six power wires (20/0.18, 0.0394 Ω/m).

When these three cables are used for 0V and 5V lines, the cable length is:

$$L \leqq \frac{3}{0.0394} = 76.75[m]$$

Thus, the length is 76.75 m. (Because of the applicable regulation of FANUC, however, the length is limited to 50 m.)
For two units, the cable can be extended to 38.37 m.
For three units, it can be extended to 25.58 m.

If the cable A66L–0001–0284#10P is used,
the cable can be extended to 12.88 m for one unit,
6.44 m for two units, and
4.29 m for three units.

Make sure that the following conditions are satisfied when manual pulse generators other than those made by FANUC are used.

The relations between the HAn and HBn signals and the pulses issued to the CNC are as shown in the figure below. The period of the pulses T_1 must be 200 μsec or greater and $T_1/4$ must be 50 μsec or greater.

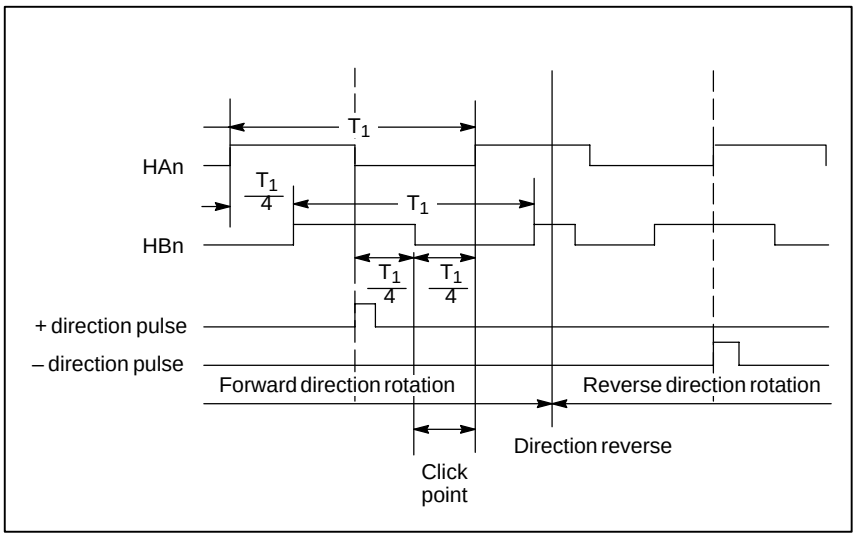

The circuit to receive the signal of the manual pulse generator is as shown in the figure below.

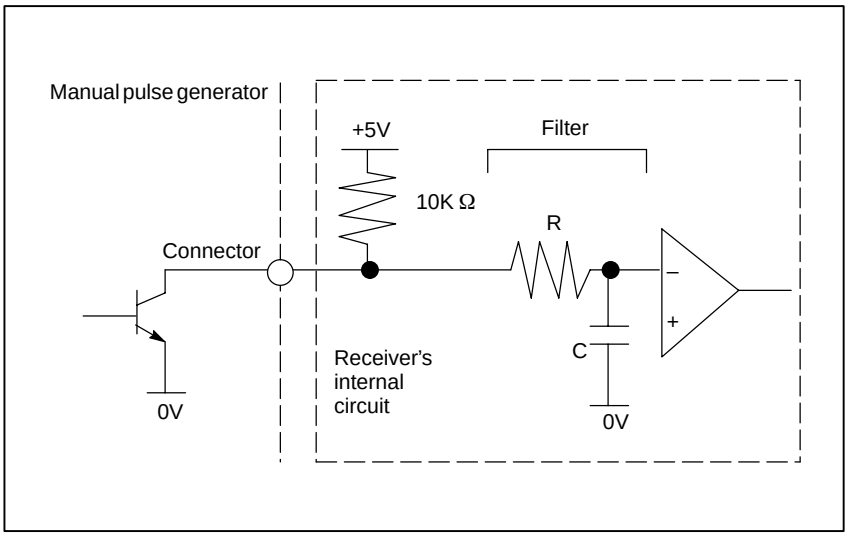

Point of change of the input signal for the receiver (threshold)
3.7 V or greater if the input signal changes from the LOW level to the HIGH level.
1.5 V or less if the input signal changes from the HIGH level to the LOW level.

9.3.4 DI Signal Connection (Rotary Switch Connection)

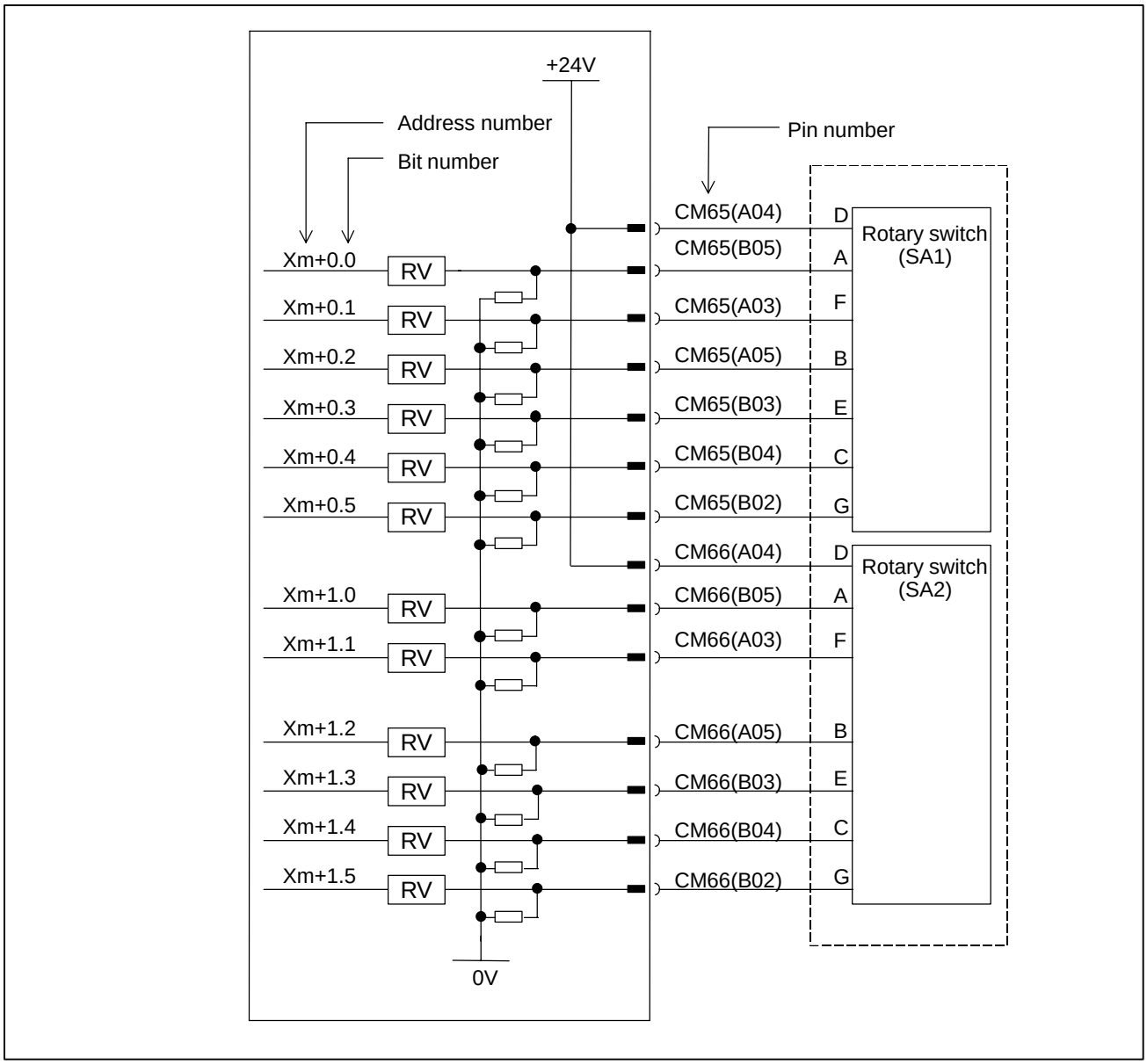

9.3.5 I/O Address

9.3.5.1 Keyboard of the operator's panel

The I/O address correspondence between the key switches on the machine operator's panel and LEDs are as follows.

BIT / Key/LED	5	4	3	2	1	0
Xm+4/Yn+0	A6	A5	A4	A3	A2	A1
Xm+5/Yn+1	B6/ Without LED	B5/ Without LED	B4/ Without LED	B3	B2	B1
Xm+6/Yn+2	C6/ Without LED	C5/ Without LED	C4/ Without LED	C3	C2	C1
Xm+7/Yn+3	D6/ Without LED	D5/ Without LED	D4/ Without LED	D3	D2	D1
Xm+8/Yn+4	E6	E5	E4	E3	E2	E1

Key switch/LED arrangement

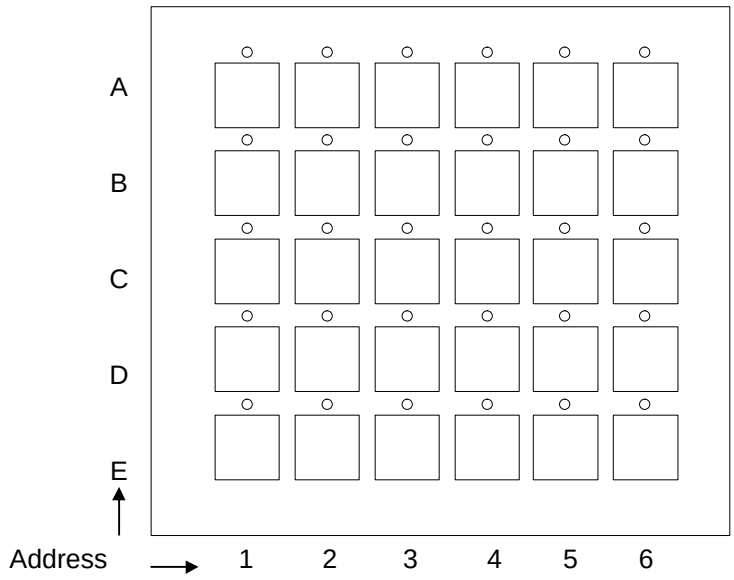

9.3.5.2 Override signals

Gray codes are output according to the table below.

Rotary switch (SA1)

%	0	1	2	4	6	8	10	15	20	30	40	50	60	70	80	90	95	100	105	110	120
Xm+0.0	0	1	1	0	0	1	1	0	0	1	1	0	0	1	1	0	0	1	1	0	0
Xm+0.1	0	0	1	1	1	1	0	0	0	0	1	1	1	1	0	0	0	0	1	1	1
Xm+0.2	0	0	0	0	1	1	1	1	1	1	1	1	0	0	0	0	0	0	0	0	1
Xm+0.3	0	0	0	0	0	0	0	0	1	1	1	1	1	1	1	1	1	1	1	1	1
Xm+0.4	0	0	0	0	0	0	0	0	0	0	0	0	0	0	0	0	1	1	1	1	1
Xm+0.5	0	1	0	1	0	1	0	1	0	1	0	1	0	1	0	1	0	1	0	1	0

Rotary switch (SA2)

%	50	60	70	80	90	100	110	120
Xm+1.0	0	1	1	0	0	1	1	0
Xm+1.1	0	0	1	1	1	1	0	0
Xm+1.2	0	0	0	0	1	1	1	1
Xm+1.3	0	0	0	0	0	0	0	0
Xm+1.4	0	1	0	1	0	1	0	1
Xm+1.5	0	0	0	0	0	0	0	0

NOTE
1 Xm+0.5 and Xm+1.4 are parity bits.
2 If parity bits are used, the output timing of override signals may differ from that of the parity bits.

9.3.6 I/O Address Allocation

The I/O address maps for the main panel are as follows.

Map of the DI space

Xm+0	General–purpose DI (Rotary switch)
Xm+1	
Xm+2	Reserved
Xm+3	
Xm+4	Operator's panel Keyboard (Key switch)
Xm+5	
Xm+6	
Xm+7	
Xm+8	
Xm+9	Reserved
Xm+10	
Xm+11	
Xm+12 (1st MPG)	MPG
Xm+13 (2nd MPG)	
Xm+14 (3rd MPG)	
Xm+15	Reserved

Map for the DO space

Yn+0	Operator's panel Keyboard (LED)
Yn+1	
Yn+2	
Yn+3	
Yn+4	
Yn+5	Reserved
Yn+6	
Yn+7	

9.3.7 External Dimensions

9.3.7.1
Outline drawing and panel–cut drawing of the small machine operator’s panel

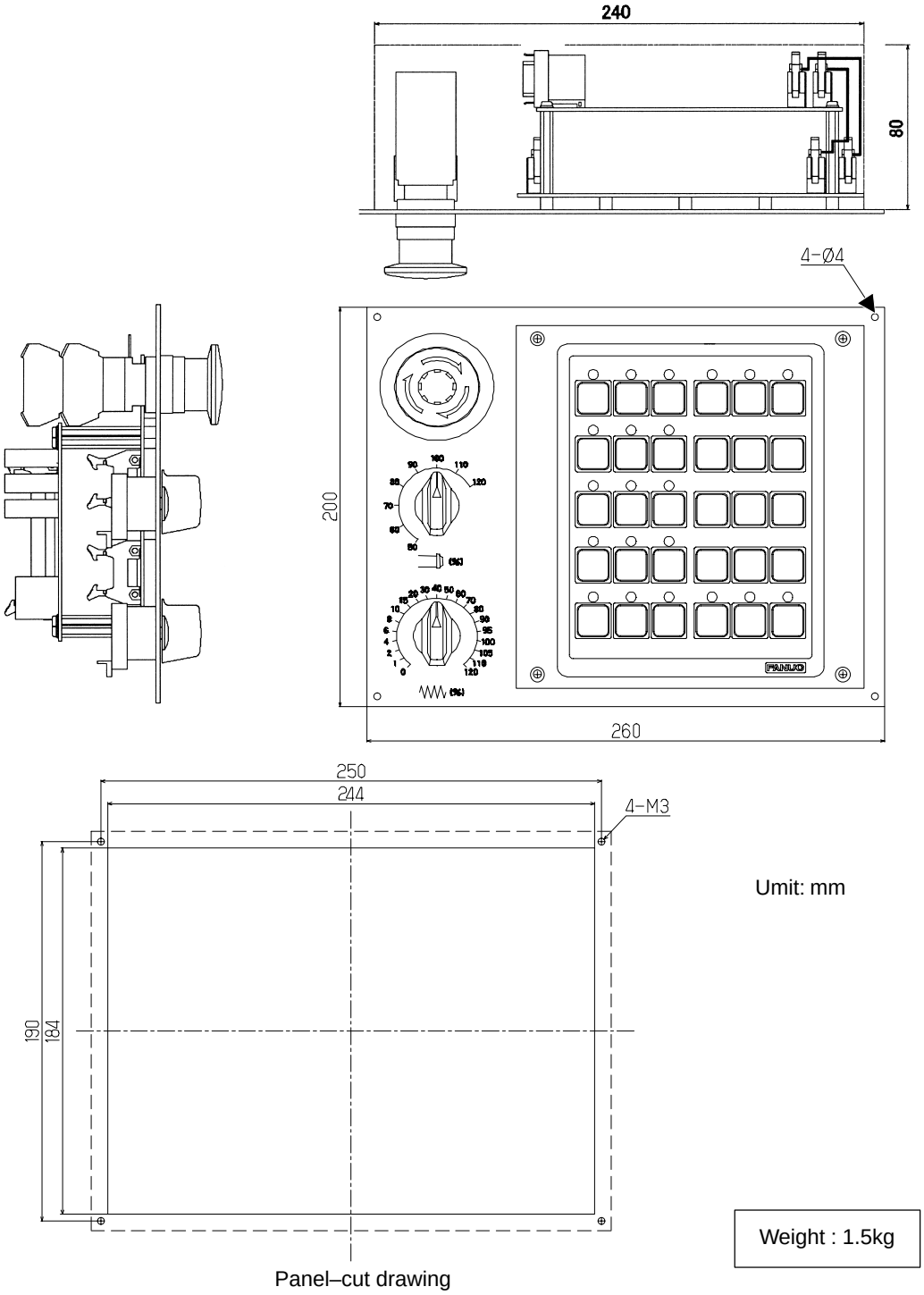

9.3.7.2
Layout of the key sheet

(1) M series

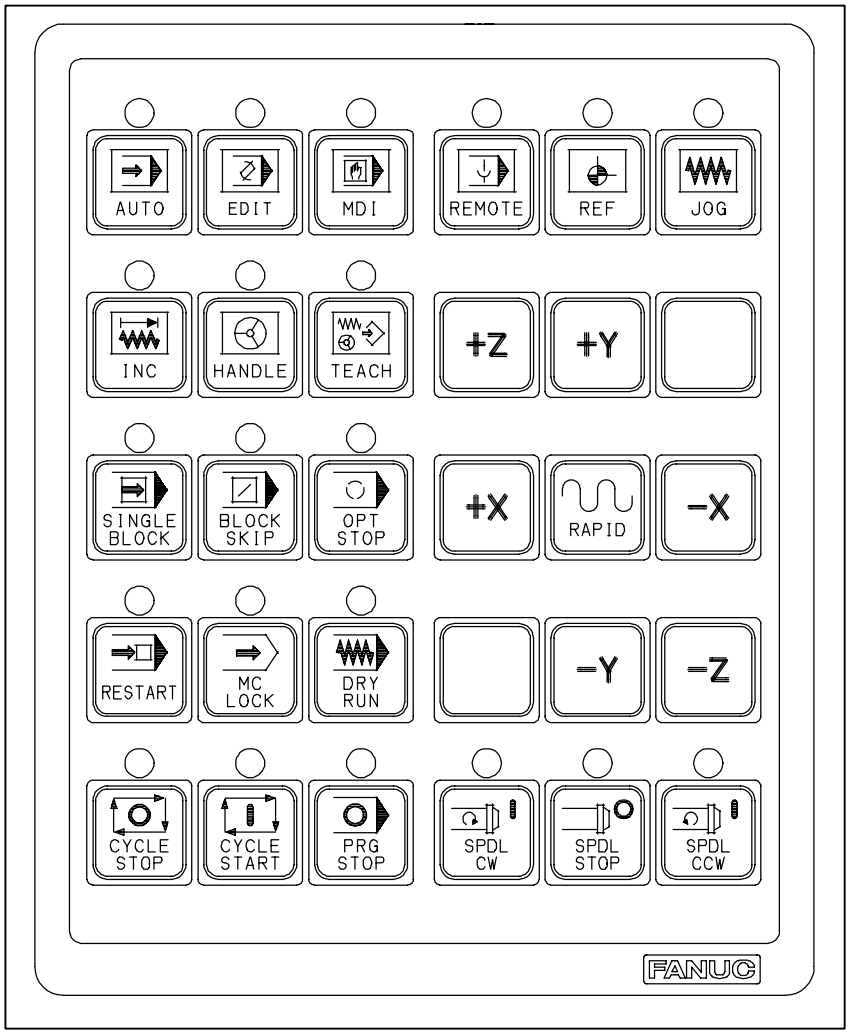

(2) T series

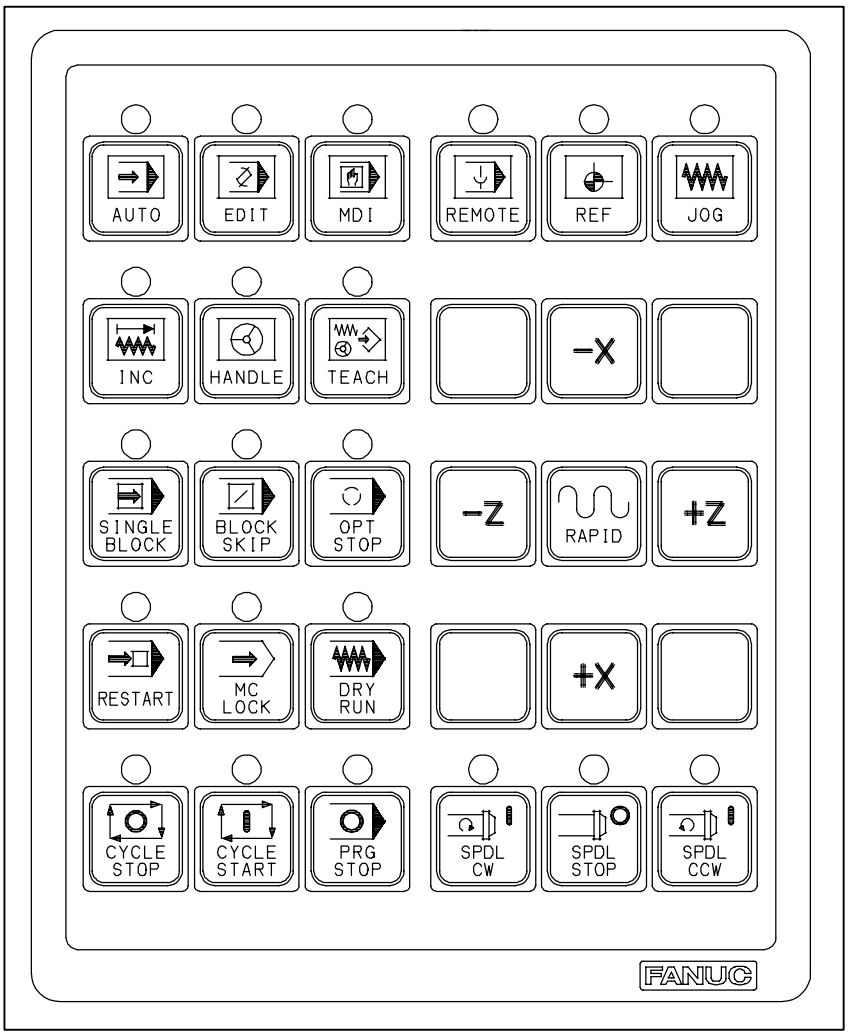
AUTO
EDIT
MDI
REMOTE
REF
JOG
INC
HANDLE
TEACH
–X
SINGLE BLOCK
BLOCK SKIP
OPT STOP
–Z
RAPID
+Z
RESTART
MC LOCK
DRY RUN
+X
CYCLE STOP
CYCLE START
PRG STOP
SPDL CW
SPDL STOP
SPDL CCW
FANUC

9.3.8 Connector Layout of the Small Machine Operator's Panel

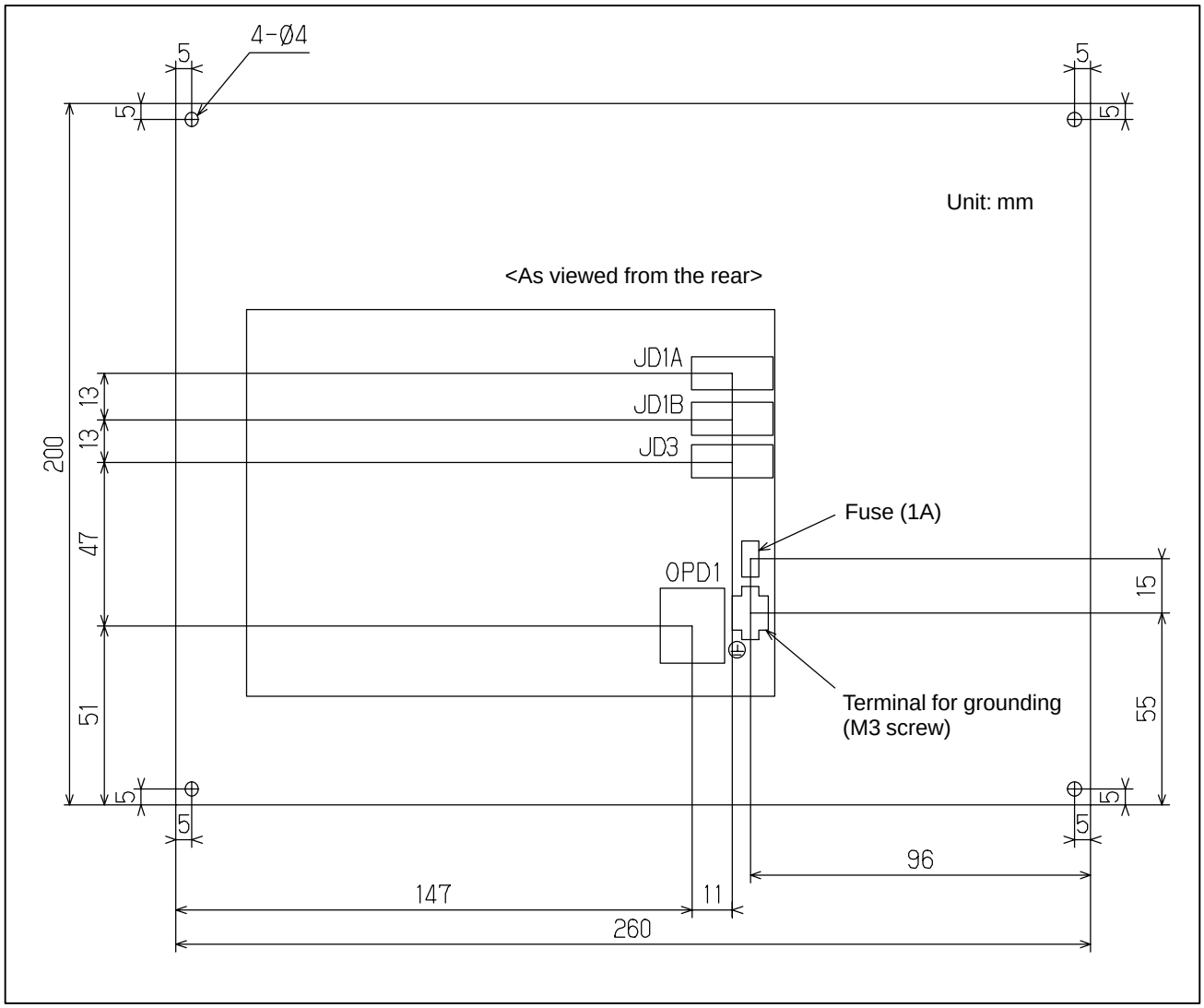

9.3.9 Specifications

9.3.9.1 Environmental requirement

Temperature Around a unit	At operation 0°C to 55°C Storing or transporting –20°C to 60°C
Temperature variance	Max. 1.1°C/min
Humidity	Normally 75% or less (Relative humidity) Short time (Within one month) 95% or less (Relative humidity)
Vibration	Operating 0.5G or less
Atmosphere	Normal FA atmosphere (Consult us when using the system under environments with higher degree of dust, coolant, or organic solution.)

9.3.9.2 Order specification

Name	Specification	Remarks
Small machine operator’s panel	A02B–0299–C150#M	M series
Small machine operator’s panel	A02B–0299–C150#T	T series
Transparent keysheet	A02B–0299–K210	Three transparent keysheets
Fuse(Spare part)	A02B–0815–K001	1A

9.3.9.3 Operator’s panel specification

Item	Specification	Remarks
Keyswitches of Machine operator’s panel	30 keys	Matrix DI
LED	Green	Supplied with 21 key switches
Override rotary switch	2	Gray code output (with a parity bit)
Emergency stop switch	1	Number of Contact : 4 (Contact a × 2, Contact b × 2) M3.5 Screw
MPG interface	Max. 3 units	
Interface to CNC	FANUC I/O Link connection	

9.3.9.4 Power supply specification

Item	Capacity	Remarks
24VDC ±10% (from Power connector CPD1, including momentary values) Momentary values and ripples are also included in ±10%.	0.4A	Including all DI consumption

9.3.10 Key Symbol Indication on Machine Operator's Panel

9.3.10.1 Meaning of key symbols

Symbol indication	English	Meaning of key
	AUTO	AUTO mode selection signal; Sets automatic operation mode.
	EDIT	EDIT mode selection signal; Sets program edit operation mode.
	MDI	MDI mode selection; Sets MDI mode.
	REMOTE	DNC operation mode; Sets DNC operation mode.
	REF	Reference position return mode selection; Sets reference position return mode.
	JOG	JOG feed mode selection; Sets jog feed mode.
	INC	Step feed mode selection; Sets step feed mode.
	HANDLE	Manual handle feed mode selection; Sets manual handle feed mode.
	TEACH	Teach–in jog (reach–in handle) mode selection signal;Sets teach–in jog (teach–in handle) mode.
	SINGLE BLOCK	Single block signal; Executes program one by one. This key is used to check a program.

Symbol indication	English	Meaning of key
	BLOCK SKIP	Block skip: Pressing this button during automatic operation causes the block under execution to stop, skipping to the end of block (;).
	PRG STOP	Program stop (output only); Turns on the LED on the button when automatic operation is stopped by M00 specified in the program.
	OPT STOP	Optional stop; Stops automatic operation after execution of the block of a program where M01 is specified in the program.
	RESTART	Program restart; A program may be restart at a block by specifying the sequence number of the block, after automatic operation is stopped because of a broken tool or for holidays.
	DRY RUN	Dry run; Sets the axis feedrate to the jog federate instead of a programmed feedrate when automatic operation is performed by setting this button to on. This function is used to check only the movement of the tool when no workpiece is mounted.
	MC LOCK	Machine lock; Updates only position display on the screen without making any axis movement, when automatic operation is performed by setting this button to on. This function is used to check a program.
	CYCLE START	Cycle start; Start automatic operation.
	CYCLE STOP	Cycle stop; Stops automatic operation.
+X –X **+Y –Y** **+Z –Z**		Manual feed axis selection; Performs jog feed (or step feed) in the direction in which this button is set to ON in jog feed (or step feed) mode.
	RAPID	Traverse; Performs jog feed at rapid traverse rate when this button is set to on.
	SPDL CW	Positive spindle rotation direction; Rotates the spindle motor in the positive direction.
	SPDL CCW	Negative spindle rotation direction; Rotates the spindle motor in the negative direction.
	SPDL STOP	Spindle stop; Stops the spindle motor rotation.

9.3.10.2 Customization of the key sheet

If a customer wishes to partially modify the standard key sheet, he or she can customize the key sheet.

- The machine tool builder prints out the desired key indication on a sticker prepared by the machine tool builder.
- Apply the sticker on the standard key sheet.
- Remove the screws from the front side, remove the escutcheon, apply a transparent key sheet on the standard key sheet, taking care not to get dust or air caught between them. Finally, put back the escutcheon.
- The transparent key sheet is an option.
  Specification:
  A02B–0299–K210 (set of three transparent key sheets)

Size of the sticker

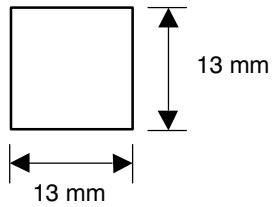

NOTE

If a small machine operator's panel customized in this way is to be maintained (replaced), the application of the sticker must be performed by the customer. The customer must prepare a sticker. Once peeled off, the transparent sheet cannot be reused. Another transparent sheet must be used.

9.3.11 Caution

The keyboard of this operator's panel is in a matrix configuration. If three or more keys are pressed on the DI matrix, DIs not entered will be entered because of the circulation of the current.
Measures against the malfunction must be taken in the ladder program. See Subsection 9.2.9 for details.

9.3.12 Maintenance Parts

Consumables

Name	Ordering specification	Remarks
Fuse (Operator's panel I/O printed circuit board)	A60L–0001–0290#LM10	Rated: 1A

Items to be repaired

Name	Ordering specification	Remarks
Operator's panel I/O printed circuit board	A20B–2002–0470	
Keyboard printed circuit board	A20B–2003–0660	
Small machine operator's panel	A20B–0299–C150#M	M series
	A20B–0299–C150#T	T series

9.4 CONNECTION OF CONNECTOR PANEL I/O MODULE

9.4.1 Configuration

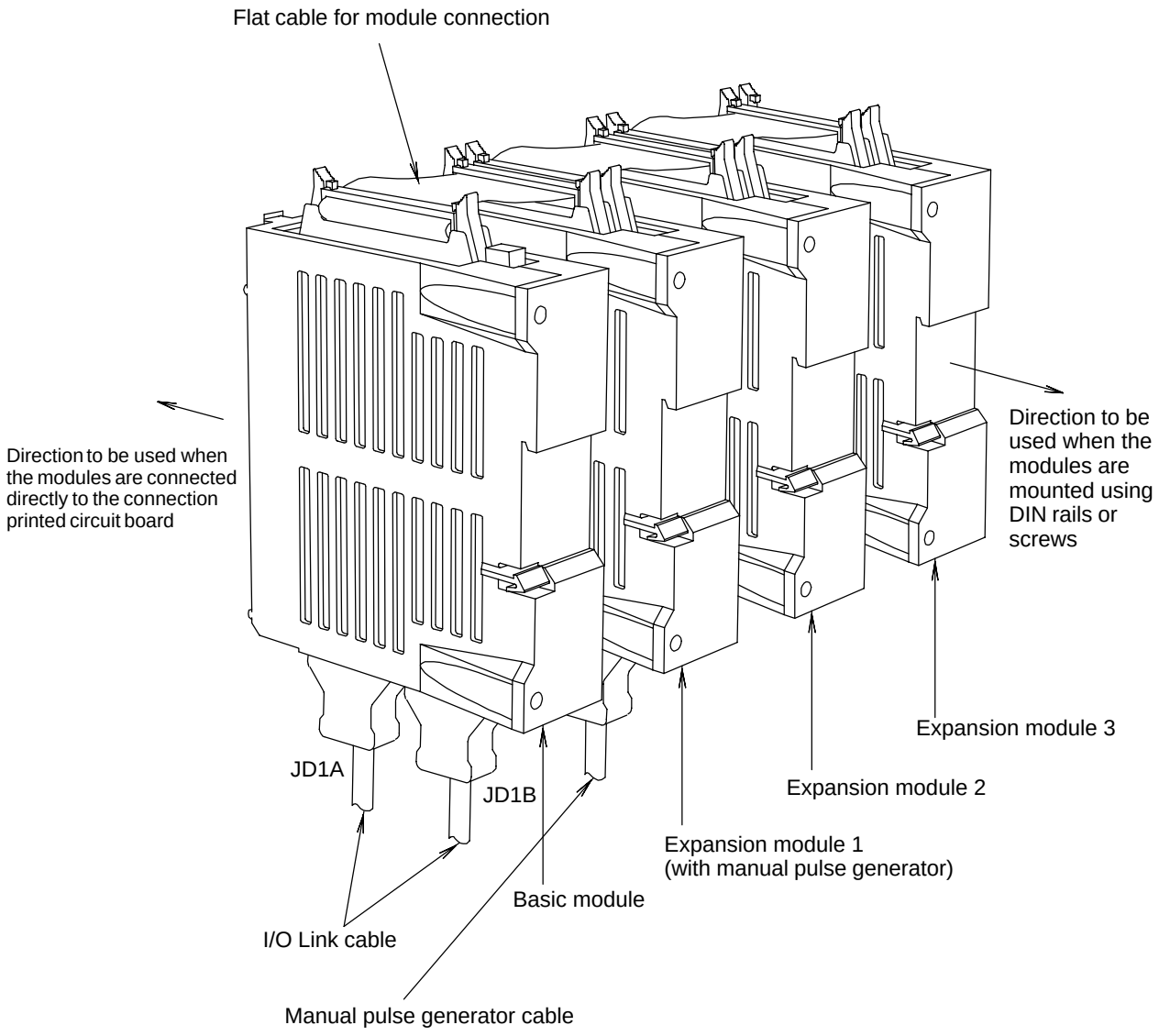

NOTE

For direction connection to the connection printed circuit board, expansion modules are installed to the right of the basic module on the installation plane. For installation using DIN rails or screws, expansion modules are installed to the left of the basic module on the installation plane.

9.4.2
Connection Diagram

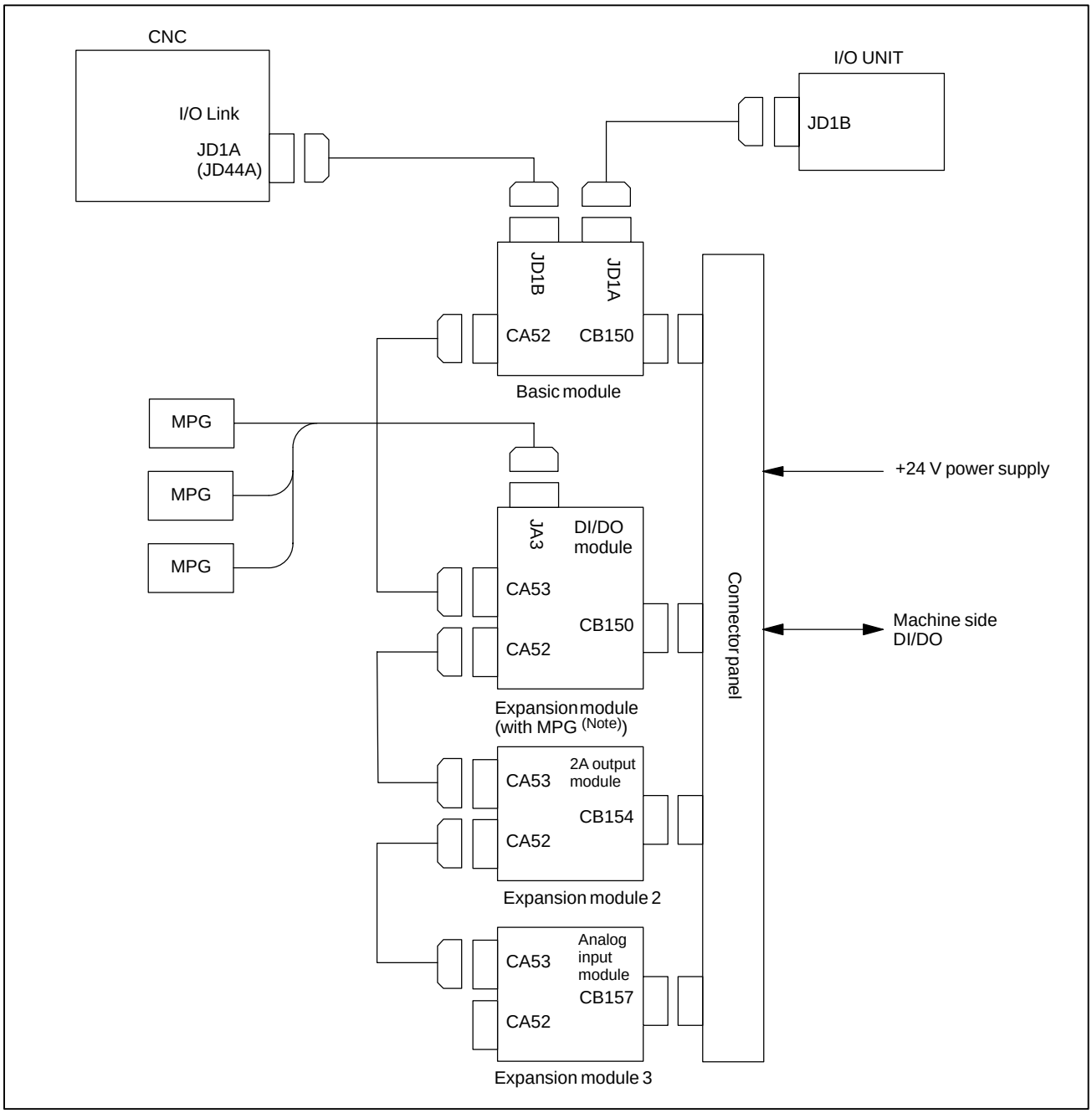

NOTE

1 Ensure that the expansion module with the MPG interface is located nearest to the basic module, as shown in the figure.

2 The connection diagram above shows an example of using a DI/DO module, 2A output module, and analog input module as expansion modules. These expansion modules can be used in any combination.

9.4.3 Module Specifications

Types of modules

Name	Drawing No.	Specifications	Reference item
I/O module for connection (basic module)	A03B–0818–C001	DI/DO : 24/16	
I/O module for connection (expansion module A)	A03B–0818–C002	DI/DO : 24/16 With MPG interface	
I/O module for connection (expansion module B)	A03B–0818–C003	DI/DO : 24/16 Without MPG interface	
I/O module for connection (expansion module C)	A03B–0818–C004	DO : 16 2A output module	
I/O module for connection (expansion module D)	A03B–0818–C005	Analog input module	
Fuse (accessory)	A03B–0815–K002	1A (For basic module)	
Inter–module flat cable	A03B–0815–K100	20 mm long Suitable for a module interval of 32 mm	

Module specifications (common items)

Item	Specifications	Remarks
Interface with CNC	FANUC I/O Link connection	Expandable up to 16 units or 1024/1024 points as CNC slaves
Interface between basic module and expansion modules	Bus connection using a flat cable	Up to three expansion modules connectable per basic module

For the specifications (such as signal input requirements) specific to each module, see the relevant pages of each item.

Installation conditions

Ambient temperature for the unit	Operation: 0°C to 55°C Storage and transportation: –20°C to 60°C
Temperature change	1.1°C/minute maximum
Humidity	Normal condition: 75% (relative humidity) Short term (within one month): 95% (relative humidity)
Vibration	Operation: 0.5 G or less
Atmosphere	Normal machining factory environment (For use in an environment with relatively high levels of dust, coolant, organic solutions, and so forth, additional measures are required.)
Other conditions	(1) Use each I/O module in a completely sealed cabinet. (2) For ventilation within each I/O module, each module must be installed in the orientation shown below. Moreover, for ventilation and wiring, allow a clearance of 100 mm or more above and below each module. Never place a device that generates a large amount of heat below an I/O module. (3) While referring to Section 9.4.17, ensure that the vent hole of the basic module is not obstructed by the flat cable. 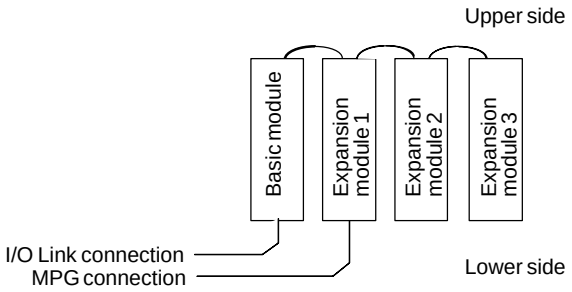

Power supply rating

Module	Power supply voltage	Power supply rating	Remarks
Basic module	24 VDC ±10% is fed through the I/O connector (CB150) of the basic module; ±10% includes momentary variations and ripples.	0.2A+7.3mA×DI	Number of DI points with DI=ON
Expansion modules A and B		0.1A+7.3mA×DI	Number of DI points with DI=ON
Expansion module C (2A module)		0.1A	
Expansion module D (analog input module)		0.1A	

As a guideline for the heat dissipation, assume [power supply capacity × 24 (W)].

9.4.4 DI/DO Connector Pin Assignment

This section describes the DI/DO connector pin allocation of the basic module and expansion modules A and B.

CB150 (HONDA MR–50RMA)

33	DOCOM			01	DOCOM
34	Yn+0.0			02	Yn+1.0
35	Yn+0.1	19	0V	03	Yn+1.1
36	Yn+0.2	20	0V	04	Yn+1.2
37	Yn+0.3	21	0V	05	Yn+1.3
38	Yn+0.4	22	0V	06	Yn+1.4
39	Yn+0.5	23	0V	07	Yn+1.5
40	Yn+0.6	24	DICOM0	08	Yn+1.6
41	Yn+0.7	25	Xm+1.0	09	Yn+1.7
42	Xm+0.0	26	Xm+1.1	10	Xm+2.0
43	Xm+0.1	27	Xm+1.2	11	Xm+2.1
44	Xm+0.2	28	Xm+1.3	12	Xm+2.2
45	Xm+0.3	29	Xm+1.4	13	Xm+2.3
46	Xm+0.4	30	Xm+1.5	14	Xm+2.4
47	Xm+0.5	31	Xm+1.6	15	Xm+2.5
48	Xm+0.6	32	Xm+1.7	16	Xm+2.6
49	Xm+0.7			17	Xm+2.7
50	+24V			18	+24V

50 male pins with fittings for fixing the connector covers

NOTE

1 The DI and DO addresses for the basic and expansion modules run contiguously. These basic and expansion module DI and DO addresses are allocated to the I/O Link as a group. For example, when the DI and DO top addresses are X0004 and Y0000 (m = 4 and n = 0), respectively, then the addresses are allocated as shown in the following table.

2 Pins 18 and 50 (+24V) of connector CB150 are used to apply 24 V externally to a module. Be sure to connect these pins because the +24 V applied to the module is used internally.

	DI	DO
Basic module	X4–X6	Y0–Y1
Expansion module 1	X7–X9	Y2–Y3
Expansion module 2	X10–X12	Y4–Y5
Expansion module 3	X13–X15	Y6–Y7

9.4.5 DI (Input Signal) Connection

This section describes the DI (input signal) connections of the basic module and expansion modules A and B.

○ A maximum of 96 points are provided
(24 points per module; 1 basic module + 3 expansion modules).

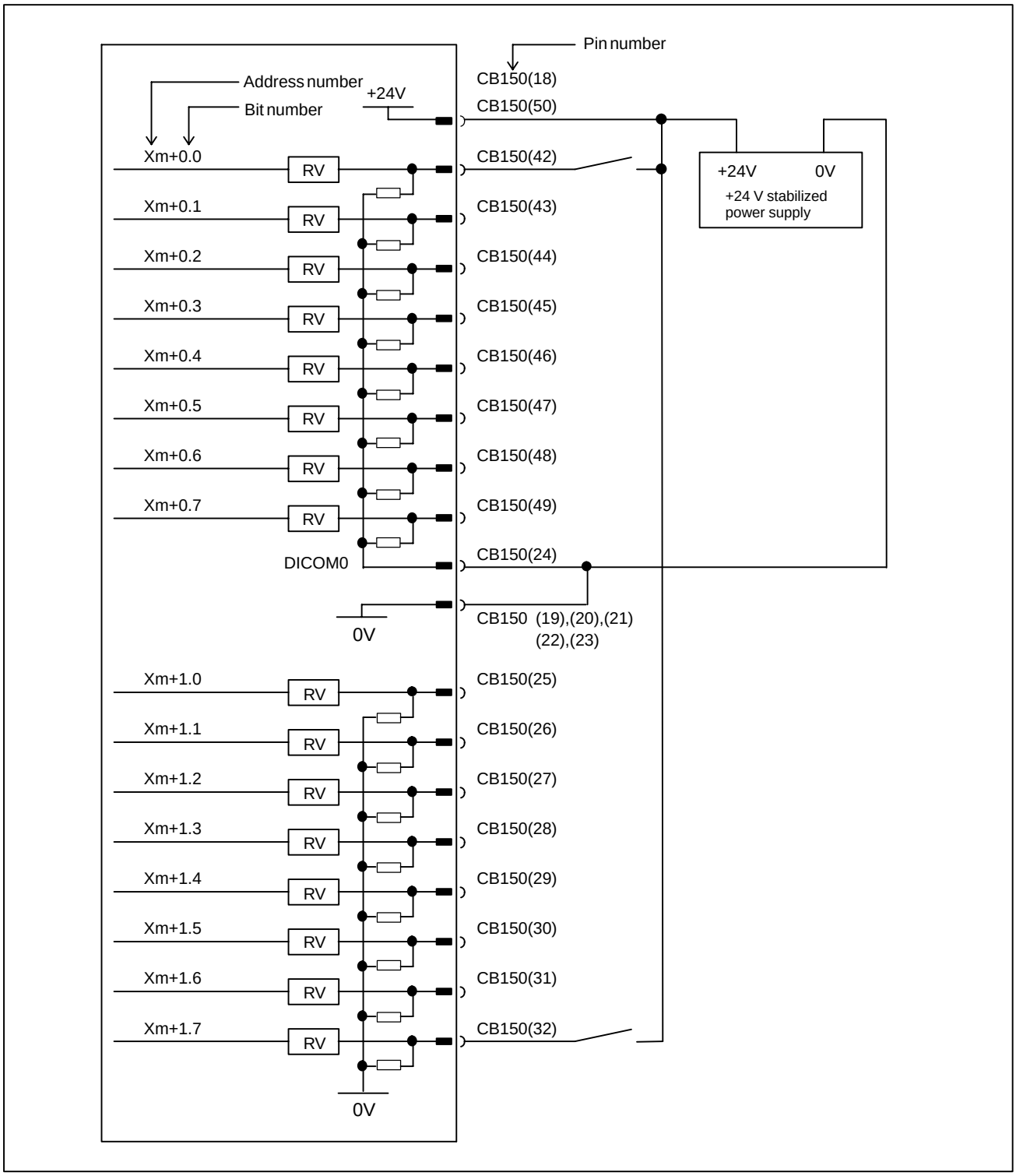

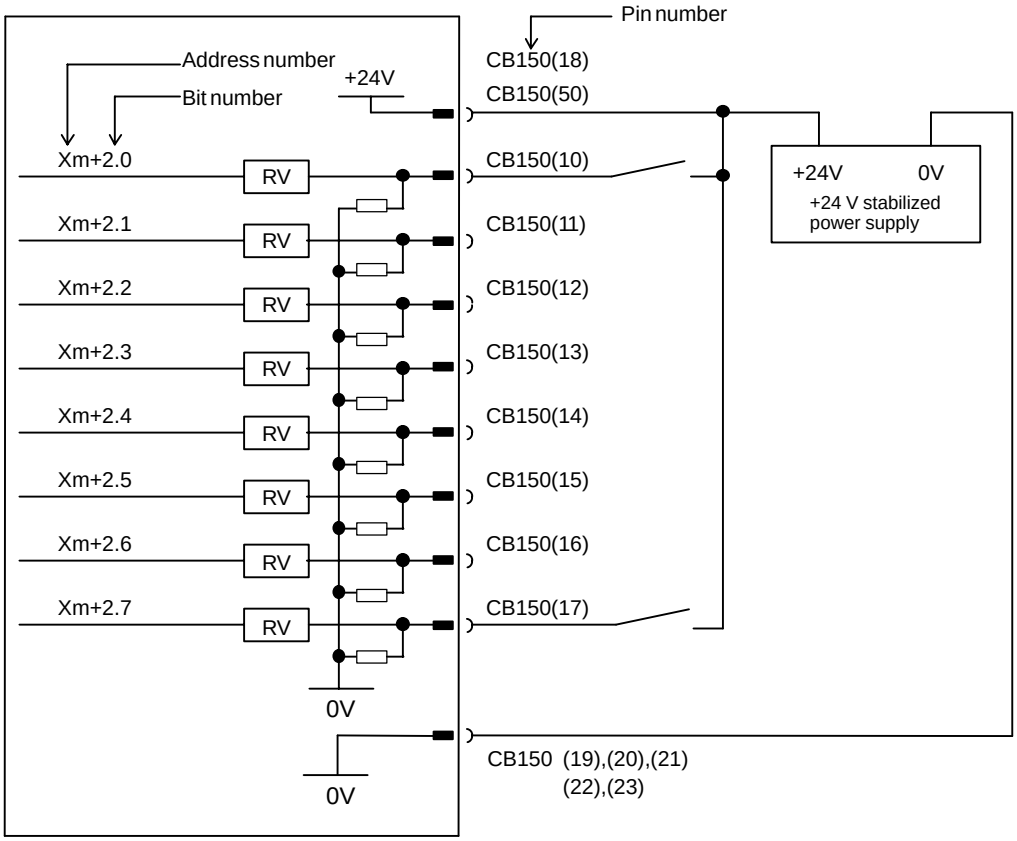

NOTE

Xm+0.0 through Xm+0.7 are DI pins for which a common voltage can be selected. That is, by connecting the DICOM0 CB150(24) pin to the +24 V power supply, a DI signal can be input with its logical state reversed. If, however, a cable is connected to ground, it has the same effect as inputting an ON state DI signal. To prevent such accidents, the connection of the DICOM0 CB150(24) pin to the 0 V power supply is recommended whereever possible.

For safety reasons, the emergency stop signal needs to be allocated to an appropriate bit of the addresses for which the common voltage is fixed, ranging from Xm+1.0 to Xm+1.7 or from Xm+2.0 to Xm+2.7. See 9.4.19 for information about how to allocate the emergency stop signal.

For unused DI pins allocated to the addresses for which the common voltage is fixed (from Xm+1.0 to Xm+1.7 and from Xm+2.0 to Xm+2.7), the logic is fixed to “0”. For unused pins allocated to Xm+0.0 to Xm+0.7 for which the common voltage can be selected, the logic is fixed to “0” when the DICOM0 CB150(24) pin is connected to the 0 V power supply. When the DICOM0 CB150(24) pin is connected to the +24 V power supply, the logic is fixed to “1”. The logic of the unused pins allocated to Xm+0.0 to Xm+0.7 is variable when the contact of the DICOM0 CB150(24) pin is open.

9.4.6 DO (Output Signal) Connection

This section describes the DO (output signal) connections of the basic module and expansion modules A and B.

○ A maximum of 64 points are provided (16 points per module; 1 basic module + 3 expansion modules).

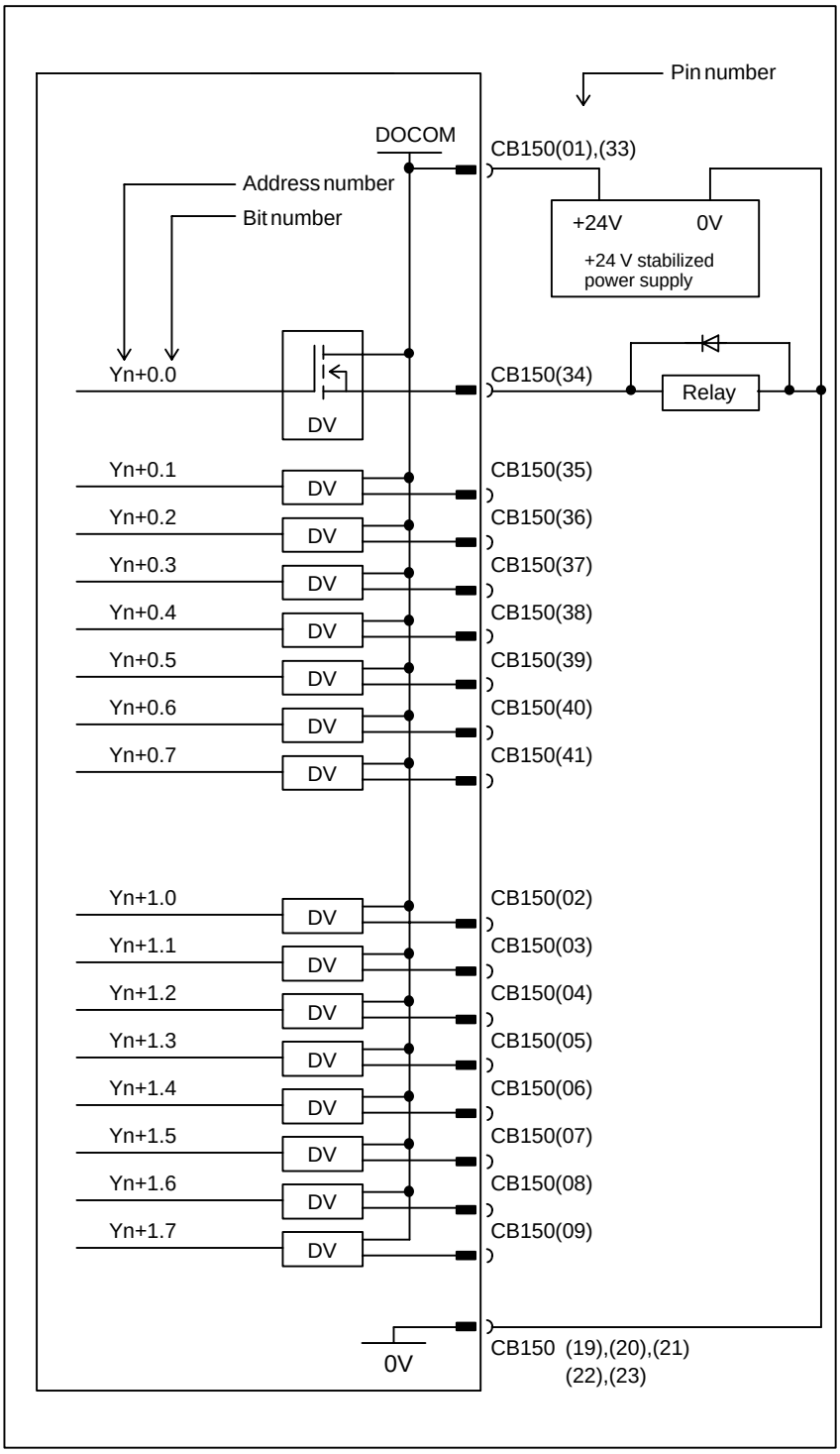

9.4.7 DI/DO Signal Specifications

This section describes the specifications of the DI/DO signals used with the basic module and expansion modules A and B.

DI (input signal specifications)

Number of points	24 points (per module)
Contact rating	30 VDC, 16 mA or more
Leakage current between contacts when opened	1 mA or less (26.4 V)
Voltage decrease between contacts when closed	2 V or less (including a cable voltage decrease)
Delay time	The receiver delay time is 2 ms (maximum). In addition, [I/O Link transfer time between CNC and I/O module (2 ms maximum)] + [ladder scan period (depending on CNC)] must be considered.

DO (output signal specifications)

Number of points	16 points (per module)
Maximum load current when ON	200 mA or less including momentary variations
Saturation voltage when ON	1 V (maximum) when the load current is 200 mA
Withstand voltage	24 V +20% or less including momentary variations
Leakage current when OFF	20 μA or less
Delay time	The driver delay time is 50 μs (maximum). In addition, [I/O Link transfer time between CNC and I/O module (2 ms maximum)] + [ladder scan period (depending on CNC)] needs to be considered.

ON/OFF of the power supply (DO common) for DO signals (output signals)
By turning off (opening) the power supply pin (DOCOM) for the DO signals (output signals), all the DO signals of each module can be turned off at the same time. At this time, the DO state is as shown below.

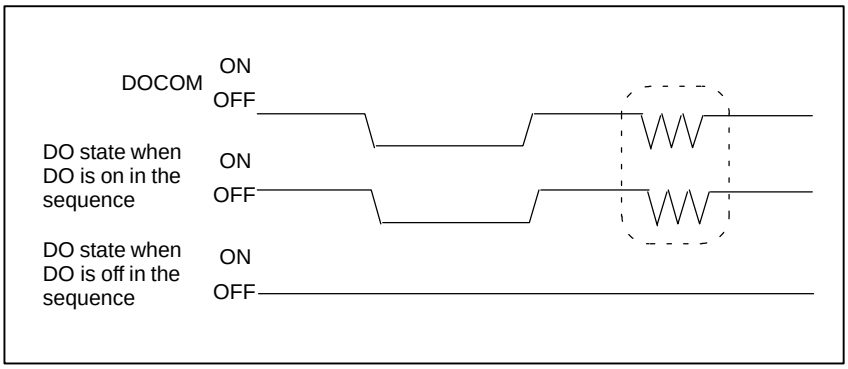

NOTE

When DO is on in the sequence, the ON/OFF state of DOCOM is directly reflected in the DO state as indicated above by the dashed box. The +24 V signal to be supplied to the I/O module must not be turned off during operation. Otherwise, a CNC communication alarm is issued. Ensure that +24 V is supplied either when or before the power to the CNC is turned on, and that +24 V is removed either when or after the power to the CNC is turned off.

Parallel DO (output signal) connection

A DO load current of twice the level can be obtained by connecting DO points in parallel and exercising ON/OFF control at the same time in the sequence. Namely, the maximum load current per DO point is 200 mA. By connecting two DO points in parallel and turning on the two DO points at the same time, 400 mA can be obtained. In this case, however, the leakage current is doubled up to 40 μA when the DO points are turned off.

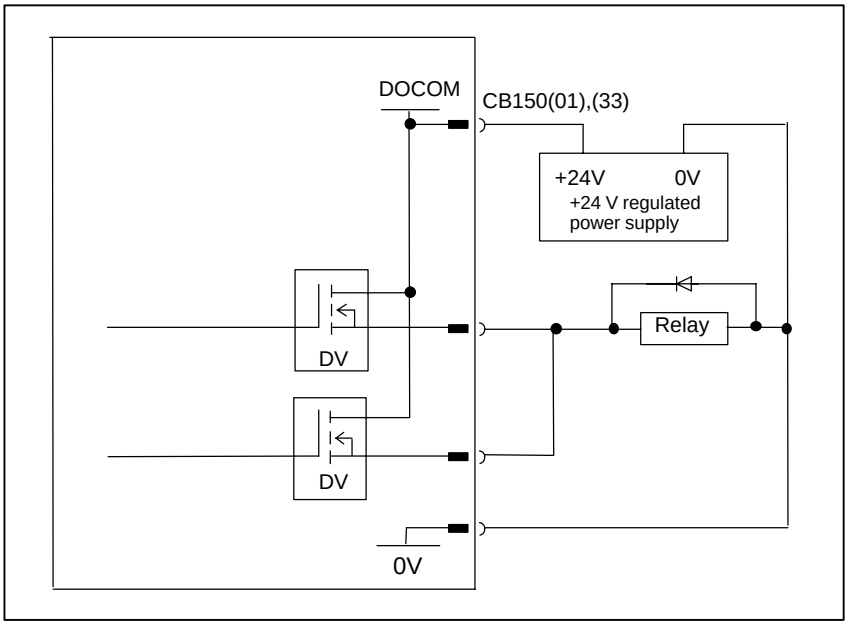

9.4.8 2A Output Connector Pin Allocation

This section describes the 2A output connector pin allocation of expansion module C.

CB154 (HONDA MR–50RMA)

33	DOCOMA			01	DOCOMA
34	Yn+0.0	19	GNDA	02	Yn+1.0
35	Yn+0.1	20	GNDA	03	Yn+1.1
36	Yn+0.2	21	GNDA	04	Yn+1.2
37	Yn+0.3	22	GNDA	05	Yn+1.3
38	Yn+0.4	23	GNDA	06	Yn+1.4
39	Yn+0.5	24		07	Yn+1.5
40	Yn+0.6	25		08	Yn+1.6
41	Yn+0.7	26		09	Yn+1.7
42		27		10	
43		28		11	
44		29		12	
45		30		13	
46		31		14	
47		32		15	
48				16	
49	DOCOMA			17	DOCOMA
50	DOCOMA			18	DOCOMA

50 pins, male,
with a metal fitting for securing the connector cover

NOTE

1 The DI/DO addresses of an expansion module and the DI/DO addresses of the basic module are contiguous. Addresses allocated to I/O Link are handled as a group covering the basic and expansion modules. That is, when the first addresses allocated are X0004 and Y0000 (m = 4, n = 0), the DI/DO addresses are as listed below.

2 When the 2A output module is used, the DI addresses of the module cannot be used. (When the 2A output module is used as expansion module 3, X13 through X15 cannot be used.)

	DI	DO
Basic module	X4 to X6	Y0 to Y1
Expansion module 1	X7 to X9	Y2 to Y3
Expansion module 2	X10 to X12	Y4 to Y5
Expansion module 3	X13 to X15	Y6 to Y7

9.4.9 2A DO (Output Signal) Connection

This section describes the 2A output connector connections of expansion module C.

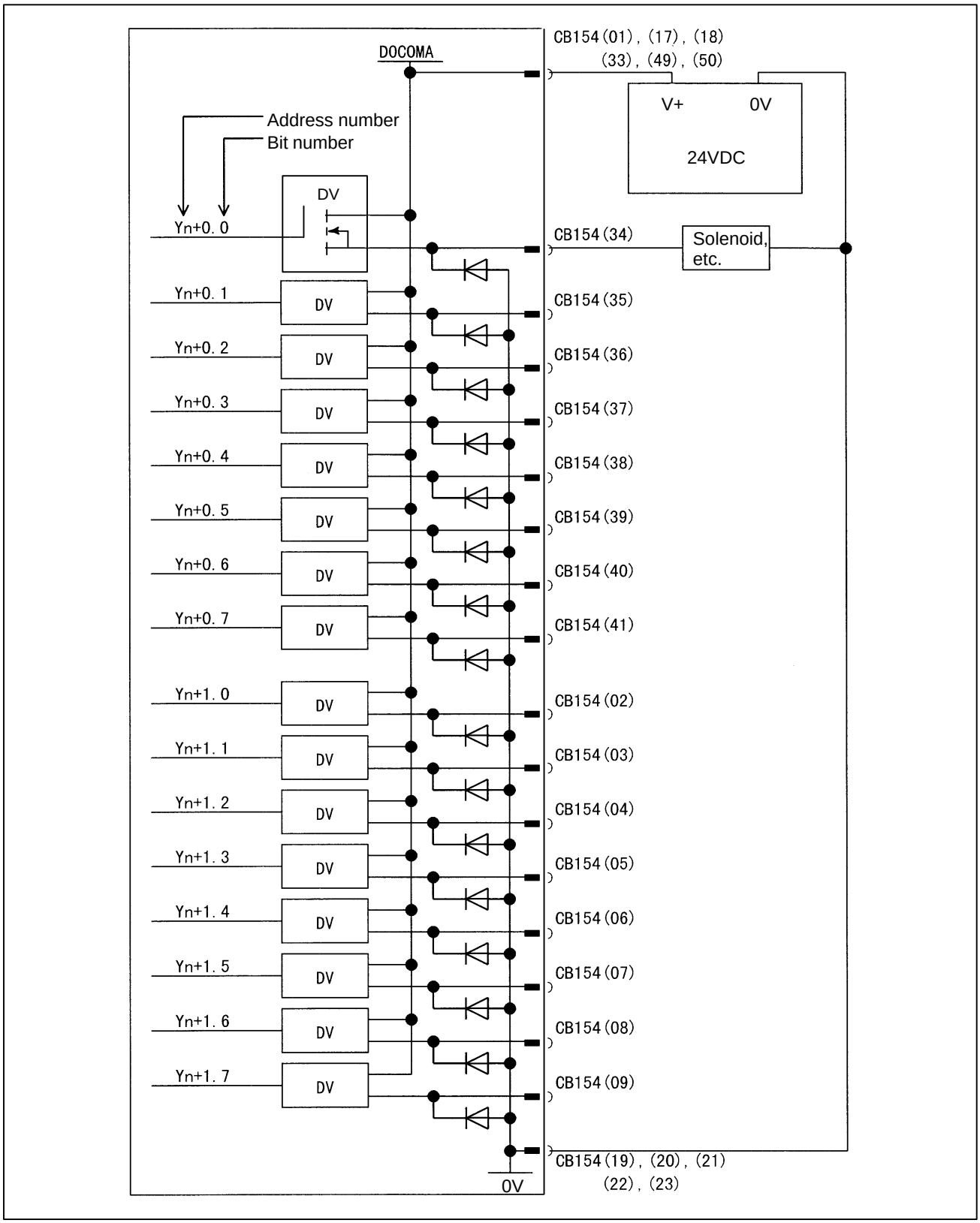

9.4.10 2A Output DO Signal Specifications

This section describes the specifications of the 2A output DO signals used with expansion module C.

DO (output signal specifications)

Number of points	32 points (per module)
Maximum load current when ON	2 A or less per point. 12 A maximum for the entire module (DO: 16 points) (including momentary variations).
Withstand voltage	24 V +20% or less (including momentary variations)
Leakage current when OFF	100 μA or less
Delay time	[I/O Link transfer time (2 ms maximum)] + [ladder scan period (depending on CNC)] must be considered.

ON/OFF of the power supply (DO common) for DO signals (output signals)
By turning off (opening) the power supply pin (DOCOM) for the DO signals (output signals), all the DO signals of each module can be turned off at one time. At this time, the DO state is as shown below.

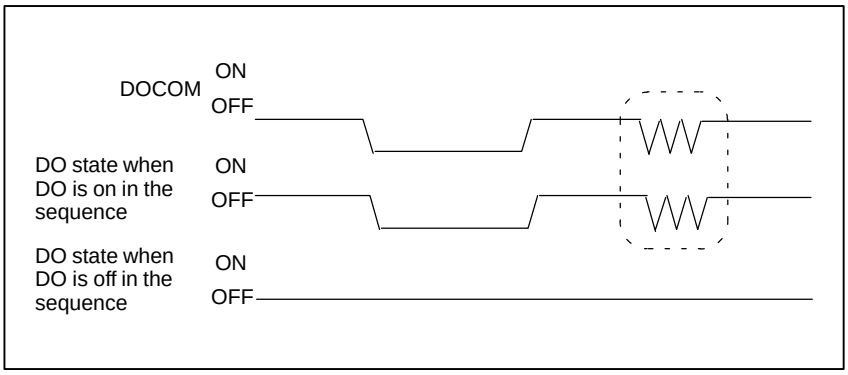

NOTE
When DO is on in the sequence, the ON/OFF state of DOCOM is directly reflected in the DO state as indicated above by the dashed box. The +24 V signal to be supplied to the I/O module must not be turned off during operation. Otherwise, a CNC communication alarm is issued. Ensure that +24 V is supplied either when or before the power to the CNC is turned on, and that +24 V is removed either when or after the power to the CNC is turned off.

Parallel DO (output signal) connection
The 2A output module does not allow parallel DO connections including parallel connections with the DO signals of other modules.

9.4.11 Analog Input Connector Pin Allocation

This section describes the analog input connector pin allocation of expansion module D.

CB157 (HONDA MR–50RMA)

33	INM3			01	INM1
34	COM3	19	FGND	02	COM1
35	FGND3	20	FGND	03	FDND1
36	INP3	21	FGND	04	INP1
37	JMP3	22	FGND	05	JMP1
38	INM4	23	FGND	06	INM2
39	COM4	24		07	COM2
40	FGND4	25		08	FGND2
41	INP4	26		09	INP2
42	JMP4	27		10	JMP2
43		28		11	
44		29		12	
45		30		13	
46		31		14	
47		32		15	
48				16	
49				17	
50				18	

50 pins, male,
with a metal fitting for securing the connector cover

NOTE

1 The DI/DO addresses of an expansion module and the DI/DO addresses of the basic module are contiguous. Addresses allocated to I/O Link are handled as a group covering the basic and expansion modules. That is, when the first addresses allocated are X0004 and Y0000 (m = 4, n = 0), the DI/DO addresses are as listed below.

2 With the analog input module, the DO space is also used as an input channel selection area.

	DI	DO
Basic module	X4 to X6	Y0 to Y1
Expansion module 1	X7 to X9	Y2 to Y3
Expansion module 2	X10 to X12	Y4 to Y5
Expansion module 3	X13 to X15	Y6 to Y7

9.4.12 Analog Input Signal Connections

This section provides a diagram of the analog input connector connections of expansion module D.

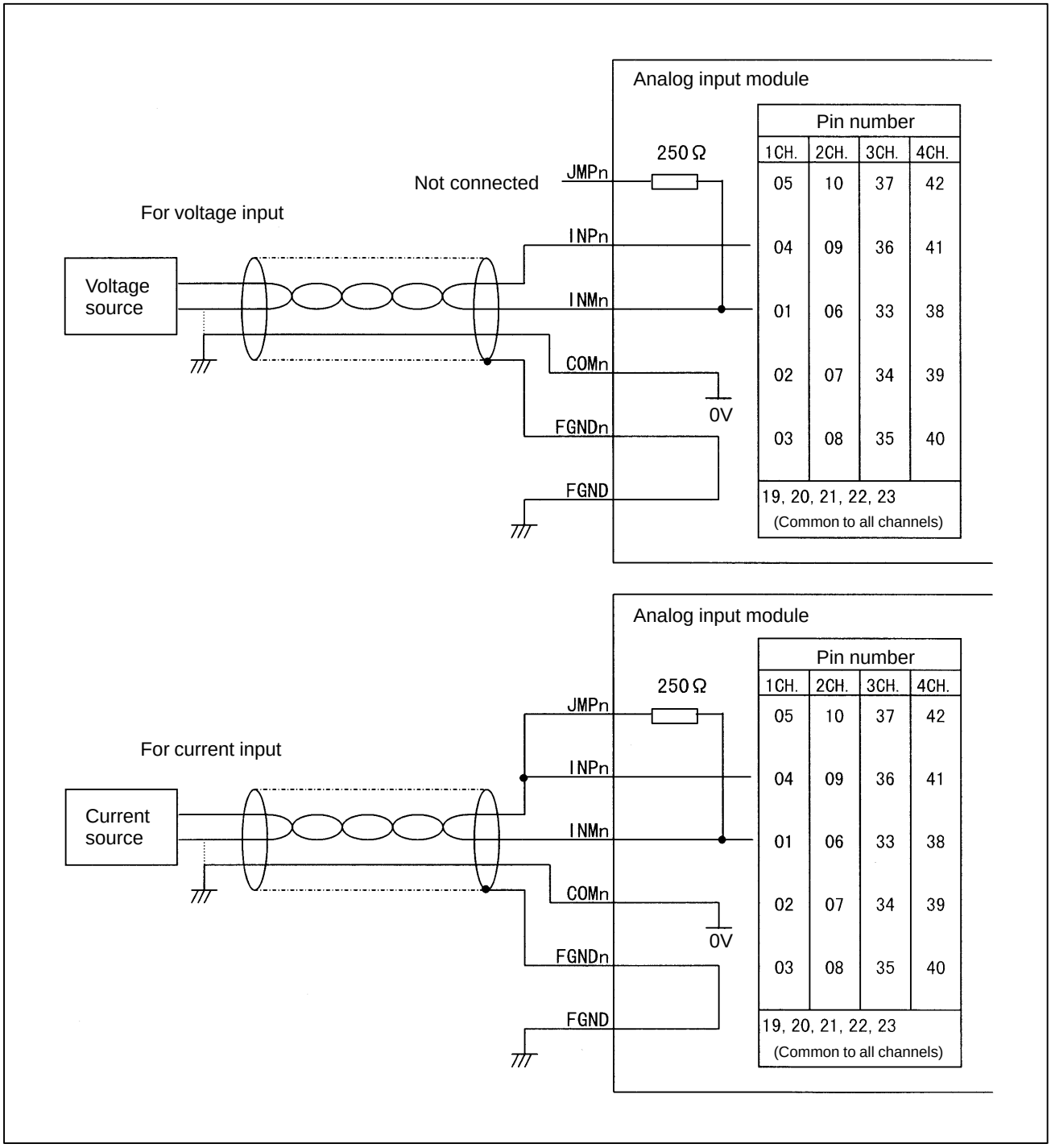

NOTE

1 In the diagram above, n represents each channel (n = 1, 2, 3, 4).
2 Current input or voltage input can be selected on a channel–by–channel basis. For current input, connect JMPn to INPn.
3 For the connection, use a shielded twisted pair.
4 In the diagram above, the shield of each channel is connected to FGNDn, and FGND is used for shield processing of all channels. However, the shield of a channel may be directly connected to frame ground with a cable clamp, instead of using FGNDn.
5 If the voltage (current) source has a GND pin, as shown in the figure above, connect COMn to this pin. Otherwise, connect INMn and COMn together in the analog input module.

9.4.13 Analog Input Signal Specifications

This section describes the specifications of the analog input signals used with expansion module D.

Item	Specifications	Remarks
Number of input channels (Note)	Four channels	
Analog input	DC –10 to +10 V (Input resistance: 4.7 MΩ) DC –20 to +20 mA (Input resistance: 250 Ω)	Voltage input or current input can be selected on channel–by–channel basis.
Digital output (Note)	12 bits (binary)	Represented as two's complement
Input/output correspondence	Analog input / Digital output +10V / +2000 +5V or +20mA / +1000 0V or 0mA / 0 –5V or –20mA / –1000 –10V / –2000	
Resolution	5 mV or 20 μA	
Overall precision	Voltage input: ±0.5% Current input: ±1%	With respect to full scale
Maximum input voltage/current	±15V/±30mA	
Minimum conversion time (Note)	Ladder scan period of CNC connected	
Number of occupied input/output points (Note)	DI = 3 bytes, DO = 2 bytes	

NOTE

This analog input module has four input channels. The digital output section consists of a group of 12 bits within the three–byte occupied input points. This means that the channel to be used can be dynamically selected by the ladder. The channel switching DO point for channel selection is included in the two–byte occupied output points.

9.4.14 Analog Input Specifications

(Digital output)

This digital input module has four input channels. The digital output section consists of a group of 12 bits within the three–byte occupied input points. The output format is indicated below.

Address in the module	7	6	5	4	3	2	1	0
Xm (even–numbered address)	D07	D06	D05	D04	D03	D02	D01	D00
Xm+1 (odd–numbered address)	0	0	CHB	CHA	D11	D10	D09	D08

D00 to D11 represent 12–bit digital output data. D00 and D11 correspond to weightings of 2^0 and 2^{11}, respectively.
D11 is a sign bit expressed as a two's complement. CHA and CHB represent analog input channels.
This means that when the two bytes above are read with a PMC program, the A–D converted data of the CHA and CHB input channels can be read from D11 to D00. For CHA and CHB, see the description of channel selection, below.
Section 6.3 provides notes on reading data with a PMC program.

(Channel selection)

With this analog input module, which of the four channels is to be output to the digital output section must be determined with a PMC program. The DO points used for this selection are CHA and CHB (two–byte occupied output points). These are mapped as indicated below.

Address in the module	7	6	5	4	3	2	1	0
Yn	X	X	X	X	X	X	X	X
Yn+1	X	X	X	X	X	X	CHB	CHA

By writing the values indicated below to CHA and CHB, the corresponding channel is selected, and the A–D converted data of the channel and the data of the selected channel can be read as DI data. The character X indicated above represents an unused bit, so that either 1 or 0 may be written in place of X.

CHB	CHA	Channel selected
0	0	Channel 1
0	1	Channel 2
1	0	Channel 3
1	1	Channel 4

(Address)

The start address of X (DI) of the basic modules including the analog input module must always be allocated at an even–numbered address. With this allocation, the digital output addresses of the analog input module are as described below, depending on where the analog input module is allocated

- When the analog input module is allocated in the space for expansion module 1 (m represents the allocation start address.)

Address in the module	7	6	5	4	3	2	1	0
Xm+3 (odd–numbered address)	Undefined							
Xm+4 (even–numbered address)	D07	D06	D05	D04	D03	D02	D01	D00
Xm+5 (odd–numbered address)	0	0	CHB	CHA	D11	D10	D09	D08

- When the analog input module is allocated in the space for expansion module 2 (m represents the allocation start address.)

Address in the module	7	6	5	4	3	2	1	0
Xm+6 (even–numbered address)	D07	D06	D05	D04	D03	D02	D01	D00
Xm+7 (odd–numbered address)	0	0	CHB	CHA	D11	D10	D09	D08
Xm+8 (even–numbered address)	Undefined							

- When the analog input module is allocated in the space for expansion module 3 (m represents the allocation start address.)

Address in the module	7	6	5	4	3	2	1	0
Xm+9 (odd–numbered address)	Undefined							
Xm+10 (even–numbered address)	D07	D06	D05	D04	D03	D02	D01	D00
Xm+11 (odd–numbered address)	0	0	CHB	CHA	D11	D10	D09	D08

NOTE

When two–byte digital output addresses are to be referenced with a PMC program, a read must always be performed word–by–word (16 bits).

9.4.15 Manual Pulse Generator Connection

An example in which three manual pulse generators are connected to expansion module A is shown below. The manual pulse generator can be connected only for the *i* series CNC.

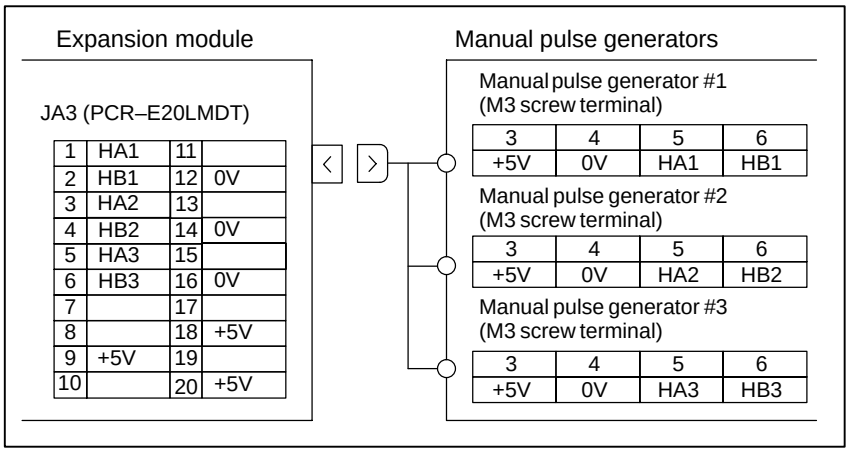

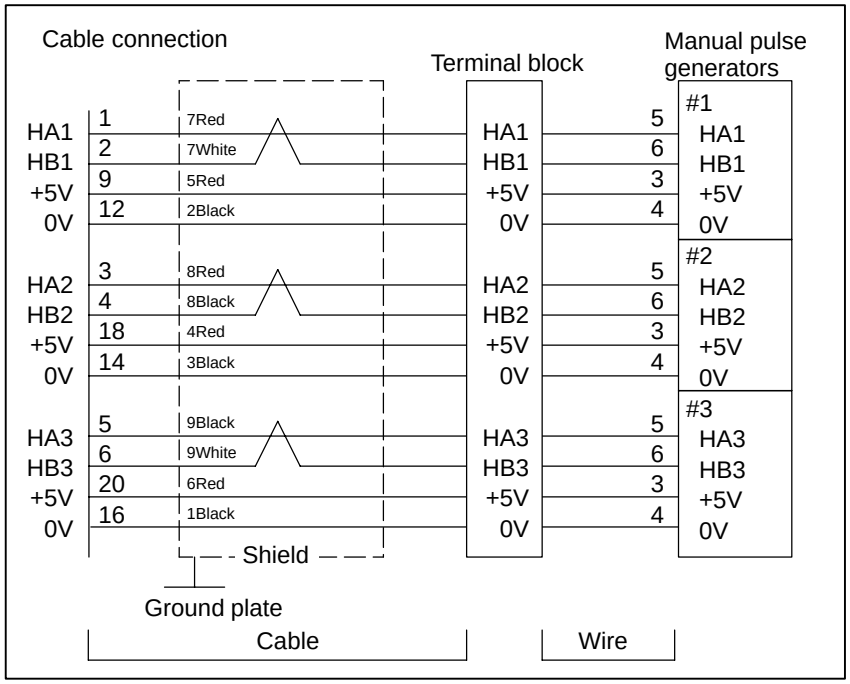

Recommended wire material:

A66L–0001–0286 (#20 AWG × 6 + #24 AWG × 3 pairs)

Recommended connector:

A02B–0120–K303 (including the following connector and case)
(Connector: FI40–2015S (Hirose Electric Co., Ltd.))
(Case: FI40–20–CV5 (Hirose Electric Co., Ltd.))

Recommended cables:

A02B–0120–K841 (7 m)
(for connecting three manual pulse generators)
A02B–0120–K848 (7 m)
(for connecting two manual pulse generators)
A02B–0120–K847 (7 m)
(for connecting one manual pulse generator)

(These cables do not include the wire shown in the above figure.)

NOTE
The number of connectable manual pulse generators depends on the type and option configuration.

9.4.16 Cable Length for Manual Pulse Generator

Like a pulse coder, the manual pulse generator operates on 5 VDC. The supply voltage drop due to the cable resistance must be held below 0.2 V (when those of the 0–volt and 5–volt wires are combined), as expressed in the following expression:

$$0.2 \geqq \frac{0.1 \times R \times 2L}{m}$$

Where
0.1 = manual pulse generator supply current (0.1 A)
R = resistance per unit cable length (Ω/m)
m = number of 0–volt and 5–volt wires
L = cable length (m).

Therefore, the cable length can be determined using the following expression.

$$L \leqq \frac{m}{R}$$

In the case of the A66L–0001–0286 cable, for example, when three pairs of signal wires and six power supply wires (20/0.18, 0.0394 Ω/m) are used (three power supply wires connected to 5 V and the other three to 0 V), the cable length is:

$$L \leqq \frac{3}{0.0394} = 76.75[m]$$

However, the maximum pulse transmission distance for the manual pulse generator is 50 m. Taking this into consideration, the cable length may be extended to:
38.37 m (when two generators are used), or
25.58 m (when three generators are used).

9.4.17 Connection of Basic and Expansion Modules

Modules can be connected in the same way, regardless of whether you are connecting the basic module to an expansion module or connecting two expansion modules. Connect the modules by using 34–pin flat cable connectors as shown in the figure below. Ensure that all 34 pins at one end of the cable are connected to the corresponding pins at the other end; e.g., connect the A1 pin to the pin having the same designation (A1) at the other end.

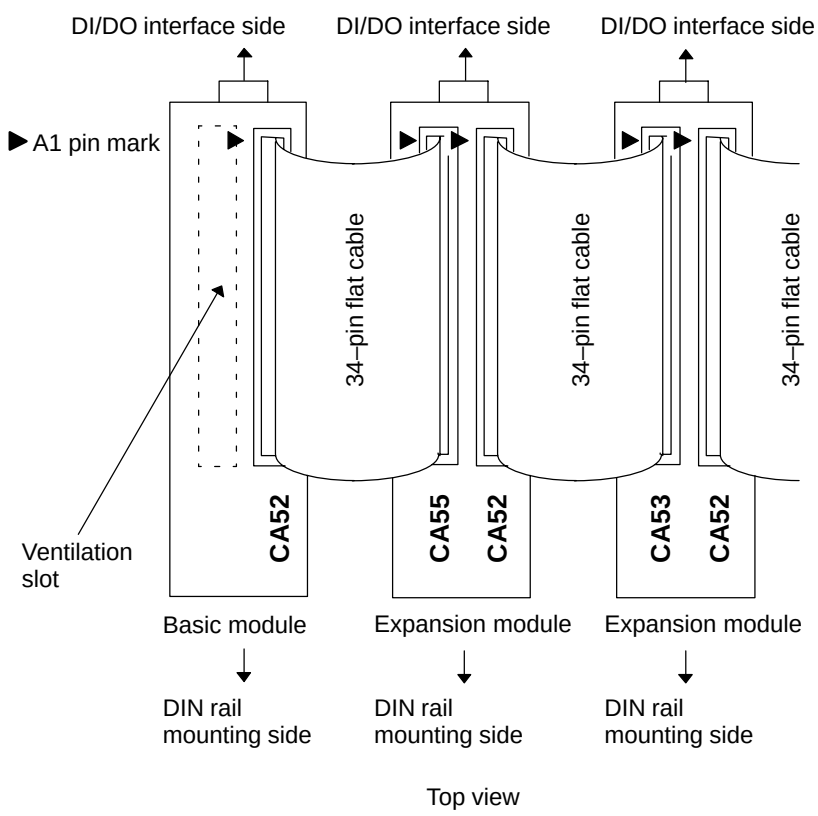

Flat cable–side connector specification:
HIF3BA–34DA–2.54R (Hirose Electric Co., Ltd.)
Module connector–side specification:
HIF3BA–34PA–2.54DS (Hirose Electric Co., Ltd.) or
FAP–3403–1202–0BS (Yamaichi Denki Co., Ltd.)

NOTE

Modules need to be spaced at least 32 mm apart, in which case a flat cable of about 20 mm in length is required. To install modules further away from each other, the cable length will be 20 mm plus the extra distance. Note that the maximum length of a flat cable is 300 mm. To ensure adequate ventilation, install the modules in such a way that the flat cables lie on top of them. The basic module has a vent at the top (as indicated by the dotted lines in the above figure). When connecting modules, install expansion modules so that the flat cables do not cover the vent, as shown in the above figure.

Therefore, for direct connection to the connection printed circuit board, expansion modules are installed to the right of the basic module on the installation plane. For installation using DIN rails or screws, expansion modules are installed to the left of the basic module on the installation plane.

9.4.18 Module Installation

When connecting a connector panel printed circuit board directly (external module view and mounting diagram)

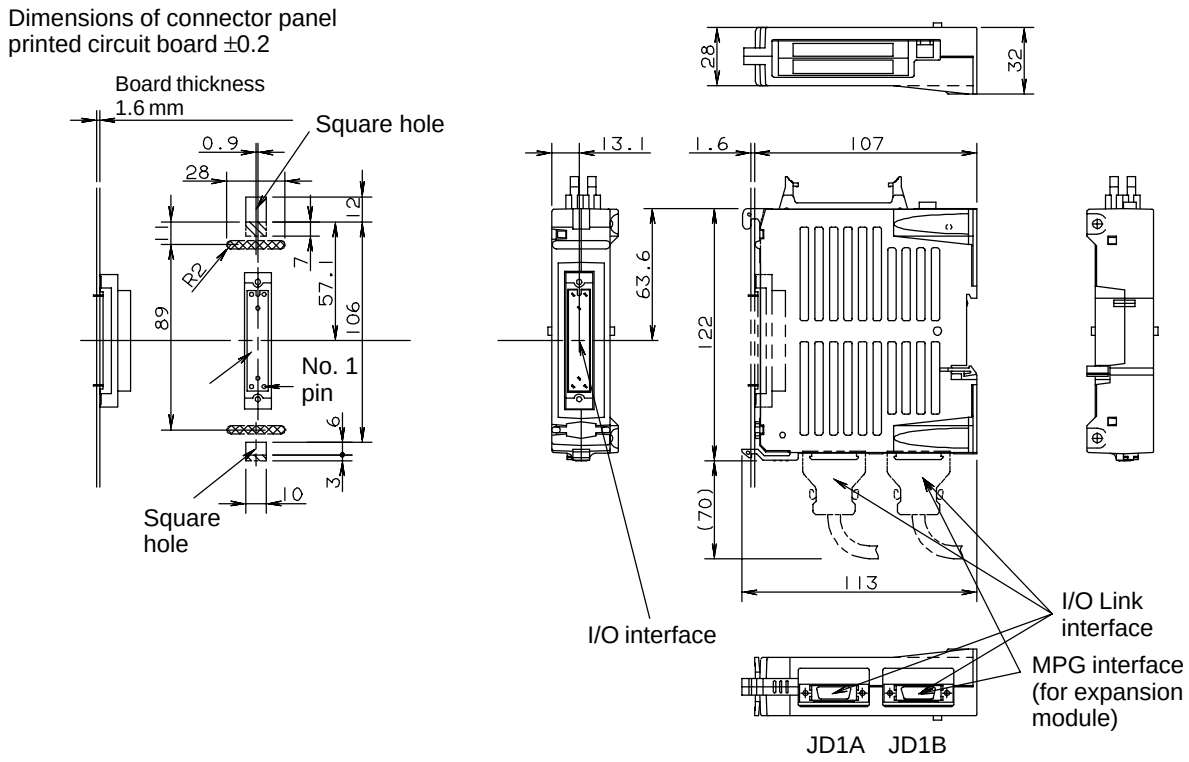

Connector panel printed circuit board connector specification:
HONDA MRH–50FD (50–pin female straight connector without fitting)

NOTE

1 A connector with a fitting (HONDA MRH–50RMA) is used for the module–side I/O interface. Always use a connector having no fitting for the connector panel printed circuit board.

2 Area where pattern printing is prohibited

: Prohibited area on soldered side

: Prohibited area on component side

When connecting a connector panel printed circuit board directly (mounting and dismounting a module)

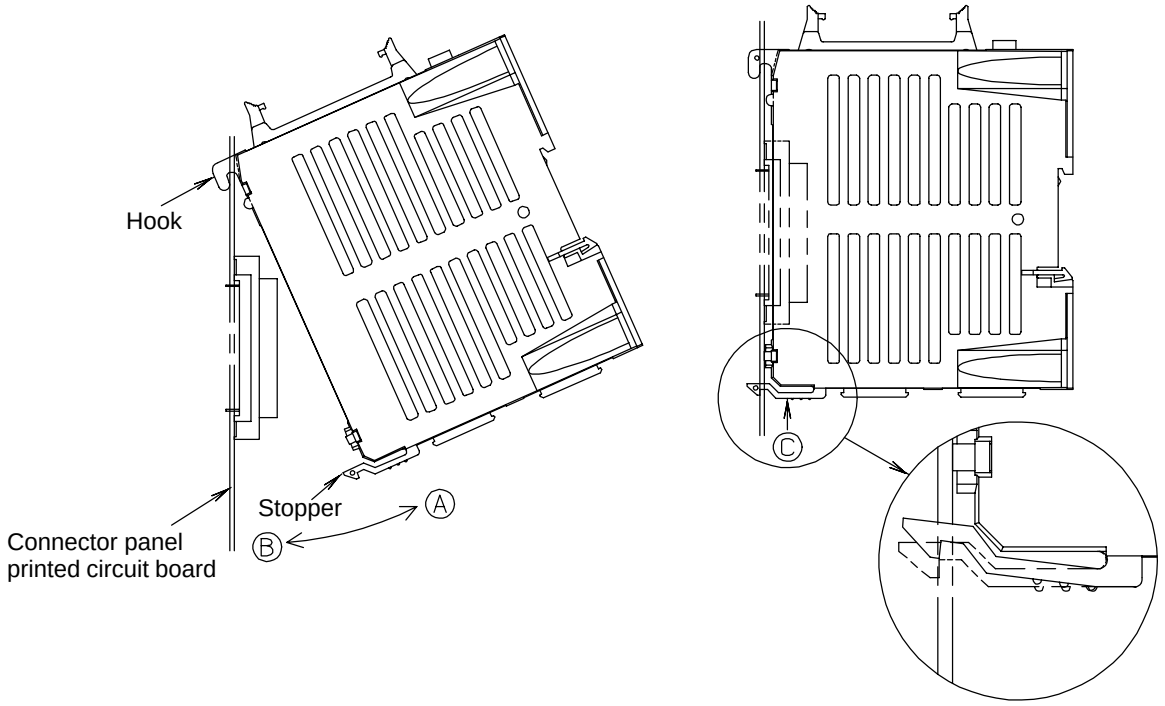

Mounting the module

1. Insert the hook of the module into the square hole located at the upper part of the connector panel printed circuit board.
2. Using the hook as a fulcrum, push the module in the direction of Ⓑ, and attach the module's connector to the connector on the printed circuit board.
3. Push the stopper into the lower hole of the printed circuit board until it clicks into place.

Dismounting the module

1. Press the stopper Ⓒ upward.
2. Using the hook as a fulcrum, pull the lower part of the module in the direction of Ⓐ.

NOTE

When mounting and dismounting a module, hold the module by its top and bottom surfaces. Avoid applying force to the sides where there are slits.

When mounting a DIN rail (external module view and mounting diagram)

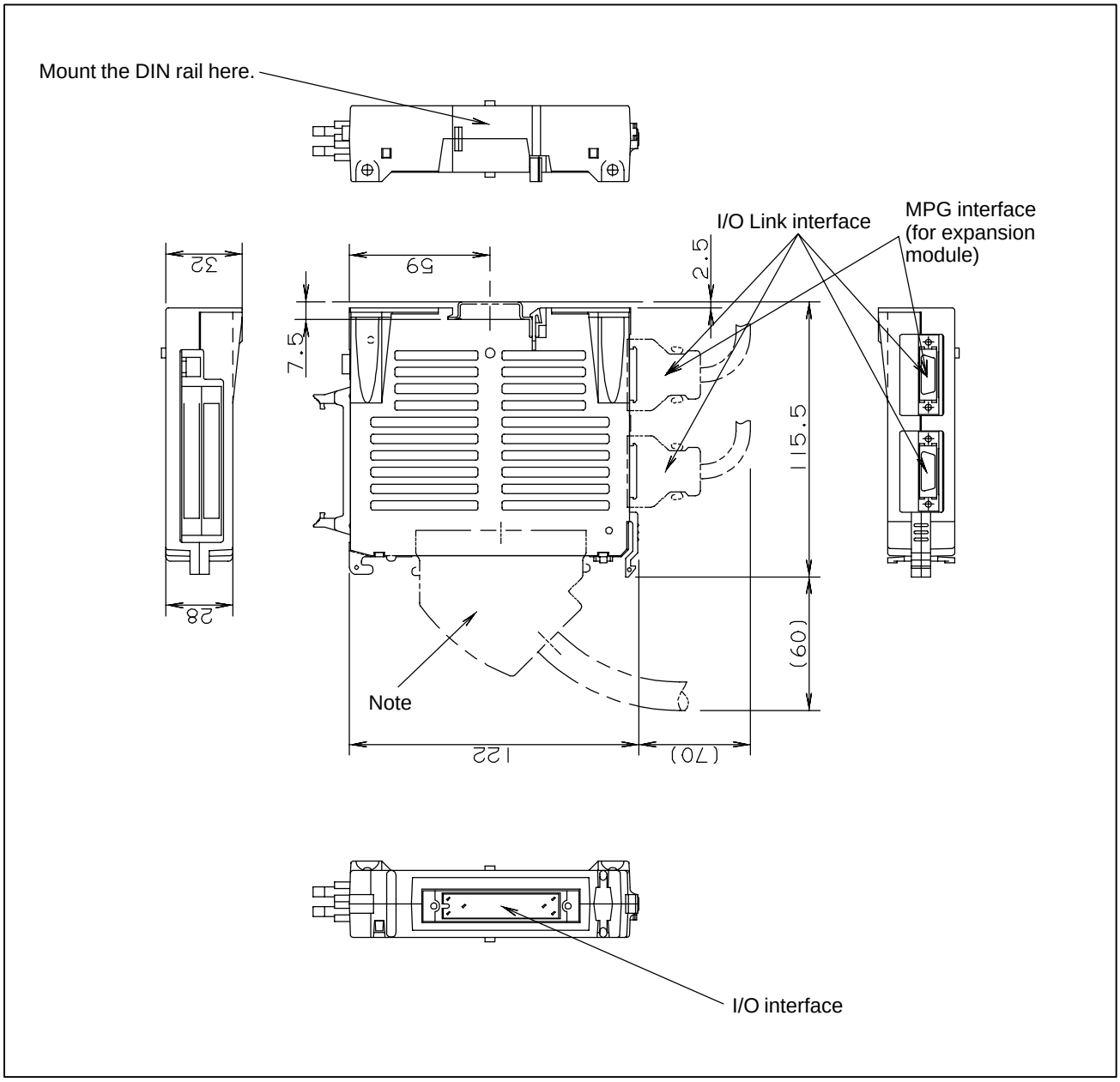

NOTE

Recommended connector: A02B–0098–K891 (including the following connector and case)
(Connector: HONDA MR–50FH solder type)
(Case: HONDA MR–50NSB angled type)

Recommended wire material: A66L–0001–0042 (7/0.18, 50 pins)

When mounting a DIN rail (mounting and dismounting a module)

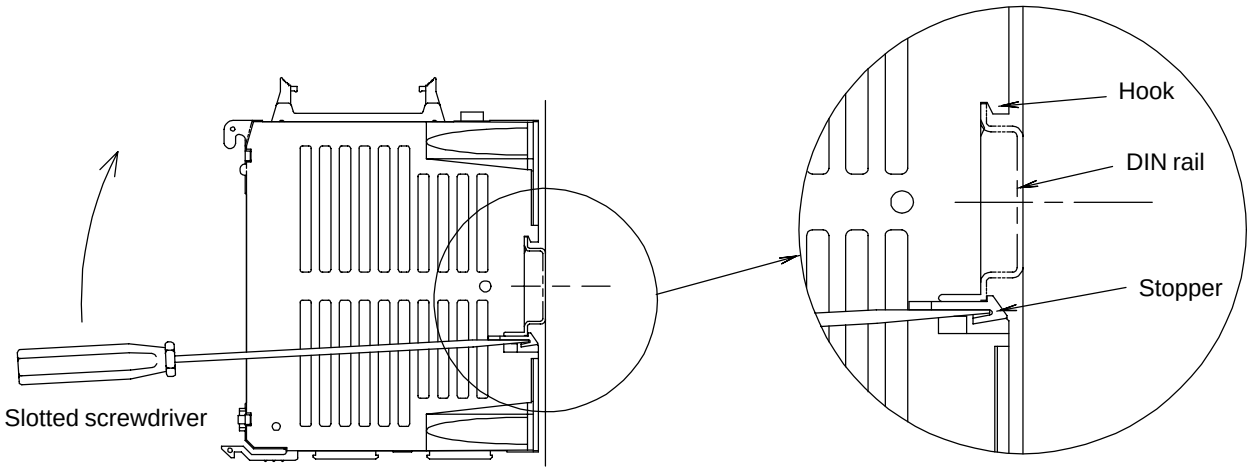

Mounting the module
1. Hook the module at the upper end of the DIN rail.
2. Push the stopper into the slit located at the lower end of the rail until it clicks into place.

Dismounting the module
1. Insert the tip of the slotted screwdriver and push out the stopper in the direction indicated by the arrow.

NOTE

When dismounting the module, take care not to damage the stopper by applying excessive force with the screwdriver.

When mounting and dismounting a module, hold the module by its top and bottom surfaces. Avoid applying force to the sides where there are slits.

When mounting a module using screws (external module view and mounting diagram)

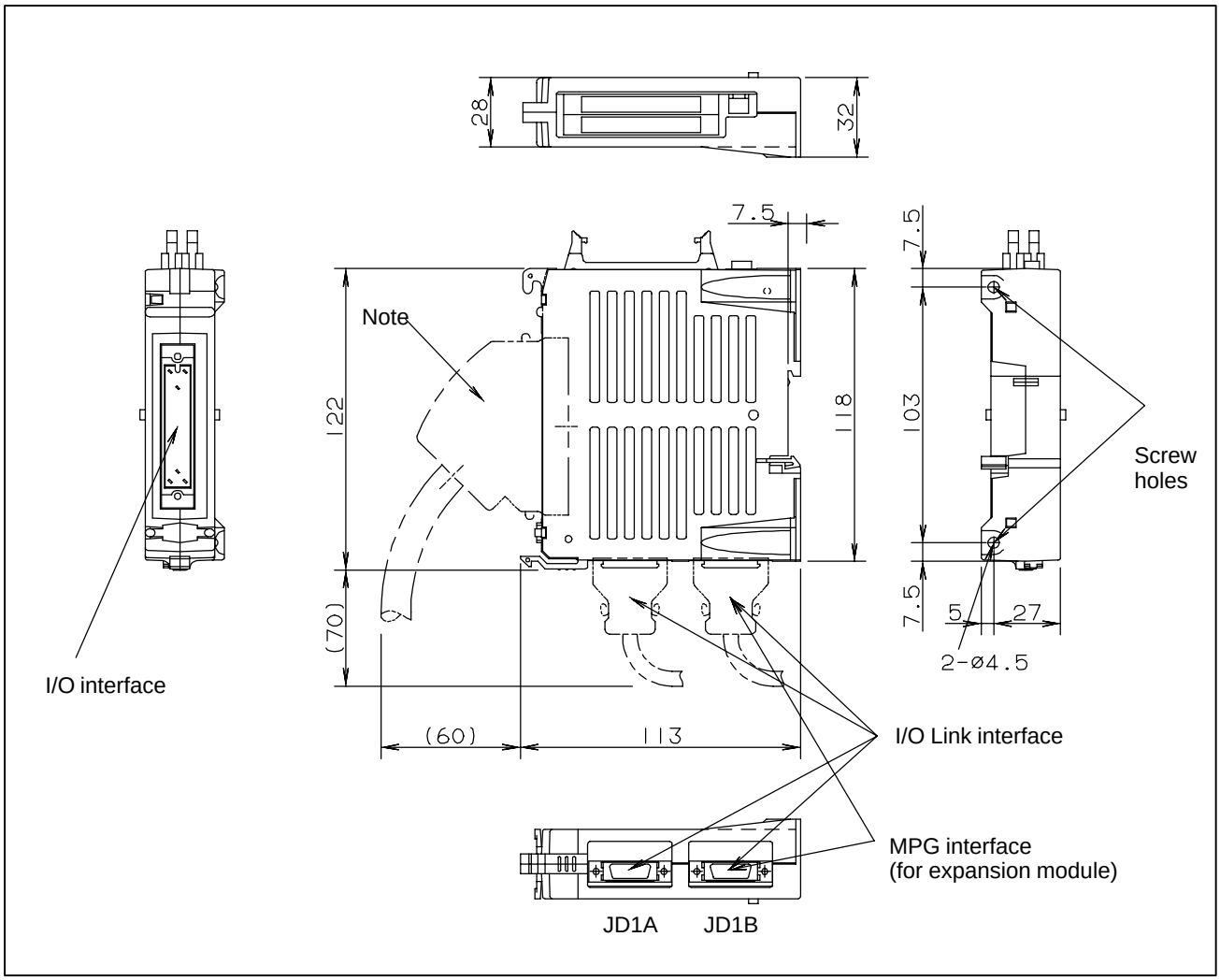

NOTE

Recommended connector: A02B–0098–K891 (including the following connector and case)
(Connector: HONDA MR–50FH solder type)
(Case: HONDA MR–50NSB angled type)

Recommended wire material: A66L–0001–0042 (7/0.18, 50 pins)

9.4.19 Other Notes

DO signal reaction to a system alarm

If a system alarm occurs in a CNC using the connector panel I/O module, or if I/O Link communication between the CNC and connector panel I/O module fails, all the DO signals of the I/O module are turned off. Therefore, due care must be taken when setting up the machine sequence. Also, the same phenomenon occurs if the power to the CNC or the I/O module is turned off.

Address allocation

For the connector panel I/O module, I/O addresses are mapped as follows.

DI space map

Xm	Basic module
Xm+1	
Xm+2	
Xm+3	Expansion module 1
Xm+4	
Xm+5	
Xm+6	Expansion module 2
Xm+7	
Xm+8	
Xm+9	Expansion module 3
Xm+10	
Xm+11	
Xm+12 (for 1st MPG)	Expansion module 1
Xm+13 (for 2nd MPG)	
Xm+14 (for 3rd MPG)	
Xm+15 (DO alarm detection)	Basic module

DO space map

Yn	Basic module
Yn+1	
Yn+2	Expansion module 1
Yn+3	
Yn+4	Expansion module 2
Yn+5	
Yn+6	Expansion module 3
Yn+7	

The basic connector panel I/O module is allocated a group of DI addresses (16 bytes) and a group of DO addresses (8 bytes). Up to three hardware expansion modules can be added or removed as required. The reason for this address allocation is explained below.

The MPG interface (MPG counter) occupies a DI space from Xm+12 through Xm+14. These addresses are fixed regardless of whether expansion module 2 or 3 is used, and Xm+12 through Xm+14 must be allocated as a DI work area to enable the use of the MPG. Therefore, when using an MPG for the *i* series CNC, allocate DI addresses in units of 16 bytes. Do not use the DI space from Xm+12 through Xm+14 for Ladder; the CNC processes the MPG counter value directly.

DI address Xm+15 is used for detecting overcurrent and overheating alarms that occur in the IC used in the DO driver. [For details, see the section describing the detection of DO (output signal) alarms.] This address is fixed regardless of whether expansion module 2 or 3 is used, and it must be allocated as a work area before it can be used. When using this area, therefore, allocate DI addresses in units of 16 bytes.

Basically, I/O addresses can be allocated to the connector panel I/O modules freely. When allocating DI addresses, however, consider also the addresses that are directly supervised by the CNC, and keep the following in mind.

Fixed addresses directly supervised by the CNC

	7	6	5	4	3	2	1	0
X0004	SKIP	ESKIP SKIP6	–MIT2 SKIP5	+MIT2 SKIP4	–MIT1 SKIP3	+MIT1 SKIP2	ZAE SKIP8	XAE SKIP7
	SKIP	ESKIP SKIP6	SKIP5	SKIP4	SKIP3	ZAE SKIP2	YAE SKIP8	XAE SKIP7
X0005								
X0006								
X0007								
X0008				*ESP				
X0009					*DEC4	*DEC3	*DEC2	*DEC1

The upper row indicates those signals used for the T series. Those in the lower row are for the M series.

When DI addresses are allocated in units of 16 bytes, starting at X0004

X0004	Basic module	← SKIPn and other fixed signals
X0005		
X0006		
X0007	Expansion module 1	← *ESP fixed signal
X0008		
X0009		← *DECn fixed signal
X0010	Expansion module 2	
X0011		
X0012		
X0013	Expansion module 3	
X0014		
X0015		
X0016 (for 1st MPG)	Expansion module 1	
X0017 (for 2nd MPG)		
X0018 (for 3rd MPG)		
X0019 (DO alarm detection)	Basic module	

The minimum configuration consists of the basic module and expansion module 1. Expansion modules 2 and 3 may be added as required. This allows fixed signals, such as SKIPn and *DECn, to always be used and the *ESP fixed signal to be allocated to an address for which the common voltage is fixed to 24 V. Also, with the *i* series CNC, the MPG interface provided by expansion module 1 can always be used.

When DI addresses are allocated in units of 16 bytes, starting at X0007

X0007	Basic module	
X0008		← *ESP fixed signal
X0009		← *DECn fixed signal
X0010	Expansion module 1	
X0011		
X0012		
X0013	Expansion module 2	
X0014		
X0015		
X0016	Expansion module 3	
X0017		
X0018		
X0019 (for 1st MPG)	Expansion module 1	
X0020 (for 2nd MPG)		
X0021 (for 3rd MPG)		
X0022 (DO alarm detection)	Basic module	

The minimum configuration consists of the basic module only. Expansion modules 1, 2, and 3 may be added as required. In the minimum configuration, SKIP and other fixed signals and the MGP interface of expansion module 1 cannot be used. In this case, however, the *DECn fixed signal can always be used and the *ESP fixed signal can be allocated to an address for which the common voltage is fixed to 24 V in the minimum configuration.

DO (output signal) alarm detection

The DO driver of the Basic and Expansion module A/B is capable of detecting an overcurrent and measuring its own temperature. If an accident, such as the connecting of the cable to ground, causes an abnormal increase in the load current or in the driver temperature, a protection circuit, which is provided for each DO driver (1 byte), is activated and keeps the DO signal for the relevant 1 byte in the OFF state until the cause of the problem is eliminated. Even if this occurs, the CNC and I/O module continue operating. The DI address (Xm+15) identifies the DO driver which has detected the alarm. The following table shows the correspondence between the DI address (Xm+15) bits and the DO addresses. Bit value “1” indicates that the corresponding DO driver has detected an alarm. The contents of the Xm+15 area can be checked by using the DGN screen of the CNC or by performing alarm processing for the area in advance by using Ladder. This helps alarm detection and recovery.

Alarm detection address and bit	DO address	Location
Xm+15.0	Yn+0	Basic module
Xm+15.1	Yn+1	Basic module
Xm+15.2	Yn+2	Expansion module 1
Xm+15.3	Yn+3	Expansion module 1
Xm+15.4	Yn+4	Expansion module 2
Xm+15.5	Yn+5	Expansion module 2
Xm+15.6	Yn+6	Expansion module 3
Xm+15.7	Yn+7	Expansion module 3

NOTE
This function is not supported by the 2A output module or analog input module.

Allocation of the 2A output module and analog input module
The 2A output module and analog input module can be allocated to any of the spaces for expansion modules 1, 2, and 3. In addition, up to three 2A output modules or analog input modules can be allocated to all the spaces for expansion modules 1, 2, and 3. When an MPG interface is required, the module occupies the space for expansion module 1; no 2A output module or analog input module can be allocated in the space for expansion module 1.
The 2A output module does not involve DI points, so that the DI area of the space in which a 2A output module is allocated is unusable. When a 2A output module is allocated to the space for expansion module 2, for example, the areas from Xm+6 to Xm+8 cannot be used. (The spaces for the other modules are not shifted. In this case, the DI space of expansion module 3 remains at Xm+9 through Xm+11.)

9.4.20 Distribution I/O Setting

By changing the setting (rotary switch) for the expansion modules, connections can be made by omitting some expansion modules as shown below.

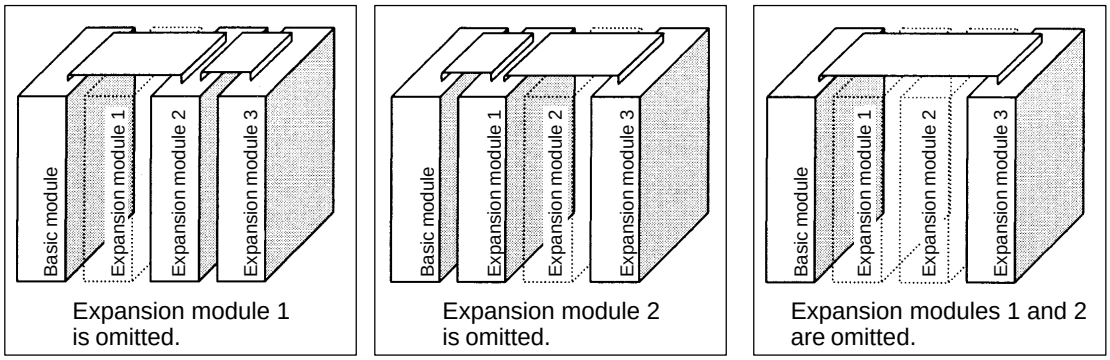

* This is a diagram in which each device is positioned so that the I/O interface connector (CB150) is on the far side.

Method of setting (control and method of setting the control)
As shown below, the control (rotary switch) is located on an expansion module. To change the setting, turn the switch with a flat–bladed screwdriver with a tip width of about 2.5 mm.

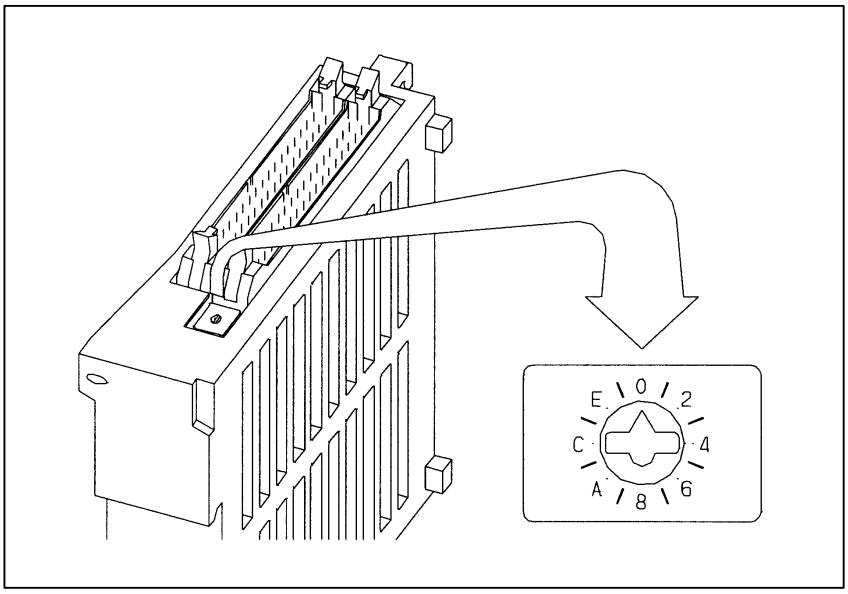

The function of the rotary switch is as follows:

Setting position	Actual indication	Meaning of setting
0	0	This is the standard setting. The rotary switch is factory–set to this position. This setting is used when no expansion module is omitted.
1	–	Set the rotary switch on an expansion module to this position when the preceding expansion module is omitted.
2	2	Set the rotary switch on an expansion module to this position when the preceding two expansion modules are omitted.
3	–	This setting is prohibited.
4 to F	4, –, 6, –, 8, –, A, –, C, –, E, –,	4, 8, or C has the same effect as 0. 5, 9, or D has the same effect as 1. 6, A, or E has the same effect as 2. 7, B, or F has the same effect as 3. (This setting, however, is prohibited.)

Examples of setting

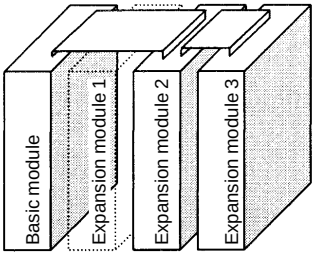

(When expansion module 1 is omitted)
On expansion module 2, set the rotary switch to setting position 1. On expansion module 3, keep the rotary switch set to setting position 0.

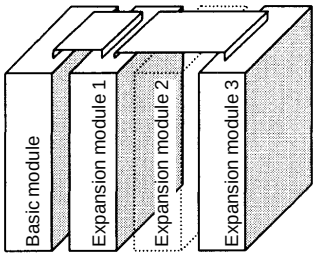

(When expansion module 2 is omitted)
On expansion module 3, set the rotary switch to setting position 1. On expansion module 1, keep the rotary switch set to setting position 0.

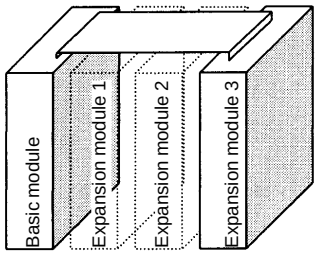

(When expansion modules 1 and 2 are omitted)
On expansion module 3, set the rotary switch to setting position 2.

NOTE

1 Expansion module A (DI/DO = 24/16, with manual pulse interface) (A03B–0815–C002) is fitted with an additional rotary switch as other types of modules are modified. However, expansion module A is always mounted at the location of expansion module 1, so that its factory setting need not be changed.

2 This is a diagram in which each device is positioned so that the I/O interface connector (CB150) is on the far side.

9.5 CONNECTION OF OPERATOR'S PANEL I/O MODULE (FOR MATRIX INPUT)

9.5.1 Overall Connection Diagram

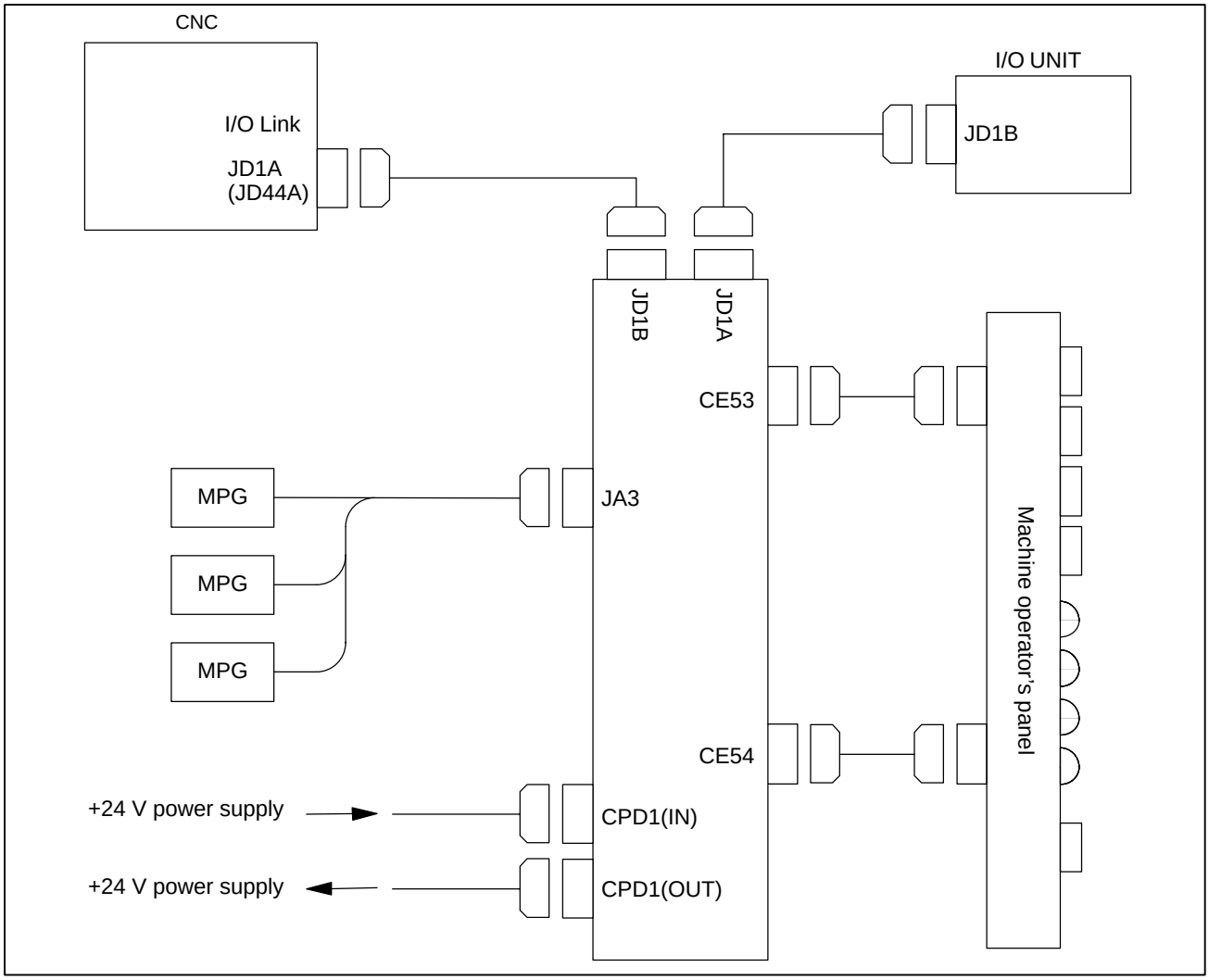

NOTE

The MPG can be connected to this operator's panel I/O module only when the *i* series CNC is used. When the operator's panel I/O module is used together with a unit (connector panel I/O module) connected to the I/O Link supporting another MPG interface, only the MPG interface of the unit (module) closest to the CNC connected to the I/O Link is enabled. The following screw type connectors cannot be used to connect the I/O Link or MPG.

Connectors that cannot be used on the cable side

	Specification	Manufacturer
Connector	FI–20–CV7	Hirose Electric Co., Ltd.
Connector case and connector	FI30–20S–CV7	Hirose Electric Co., Ltd.

9.5.2 Power Connection

Provide the CPD1 (IN) connector, shown below, with the power necessary for printed circuit board operation and that for DI operation. To facilitate power division, the power is output to CPD1 (OUT) exactly as it is input from CPD1 (IN). When power division is required, use CPD1 (OUT).
Up to 1.0 A can be supplied by branching.

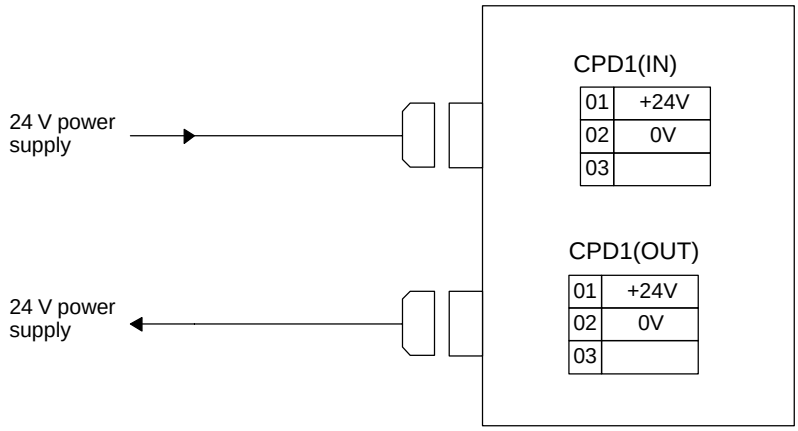

Recommended cable–side connector:
A02B–0120–K324
(including the following connector housing and case)
(Housing: Japan AMP 1–178288–3)
(Contacts: Japan AMP 1–175218–5)

NOTE

The specification of the power supply connector CPD1 (IN) is the same as that for CPD1 (OUT). There are no indications on the printed circuit board to distinguish between the IN and OUT connectors. Do not turn off the +24 V supply to the connector during operation. Turning off the +24 V supply will cause a CNC communication alarm. When turning on the power, the +24 V supply to the I/O module must be turned on before or at the same time as the power supply to the CNC. When turning off the power, the +24 V supply to the I/O module must be turned off after or at the same time as the power supply to the CNC.

9.5.3 DI/DO Connector Pin Arrangement

CE53

	A	B
01	0V	0V
02	N.C.	+24V
03	Xm+0.0	Xm+0.1
04	Xm+0.2	Xm+0.3
05	Xm+0.4	Xm+0.5
06	Xm+0.6	Xm+0.7
07	Yn+0.0	Yn+0.1
08	Yn+0.2	Yn+0.3
09	Yn+0.4	Yn+0.5
10	Yn+0.6	Yn+0.7
11	Yn+1.0	Yn+1.1
12	Yn+1.2	Yn+1.3
13	Yn+1.4	Yn+1.5
14	Yn+1.6	Yn+1.7
15	Yn+2.0	Yn+2.1
16	Yn+2.2	Yn+2.3
17	Yn+2.4	Yn+2.5
18	Yn+2.6	Yn+2.7
19	KYD0	KYD1
20	KYD2	KYD3
21	KYD4	KYD5
22	KYD6	KYD7
23	KCM1	KCM2
24	KCM3	KCM4
25	DOCOM	DOCOM

CE54

	A	B
01	0V	0V
02	COM1	+24V
03	Xm+1.0	Xm+1.1
04	Xm+1.2	Xm+1.3
05	Xm+1.4	Xm+1.5
06	Xm+1.6	Xm+1.7
07	Yn+3.0	Yn+3.1
08	Yn+3.2	Yn+3.3
09	Yn+3.4	Yn+3.5
10	Yn+3.6	Yn+3.7
11	Yn+4.0	Yn+4.1
12	Yn+4.2	Yn+4.3
13	Yn+4.4	Yn+4.5
14	Yn+4.6	Yn+4.7
15	Yn+5.0	Yn+5.1
16	Yn+5.2	Yn+5.3
17	Yn+5.4	Yn+5.5
18	Yn+5.6	Yn+5.7
19	Yn+6.0	Yn+6.1
20	Yn+6.2	Yn+6.3
21	Yn+6.4	Yn+6.5
22	Yn+6.6	Yn+6.7
23	KCM5	KCM6
24	KCM7	DOCOM
25	DOCOM	DOCOM

Flat cable–side connector specification:
A02B–0120–K342
(HIFBB–50D–2.54R (Hirose Electric Co., Ltd.))
50 contacts
Cable material specification:
A02B–0120–K886
(61–meter, 50–pin cable
(Hitachi Cable, Ltd. or Oki Electric Cable Co., Ltd.))

NOTE

An output DC voltage of +24 V at CE53 (B02) and CE54 (B02) is for DI signals. Do not supply 24 VDC to these pins from the outside.

9.5.4 DI (General–purpose Input Signal) Connection

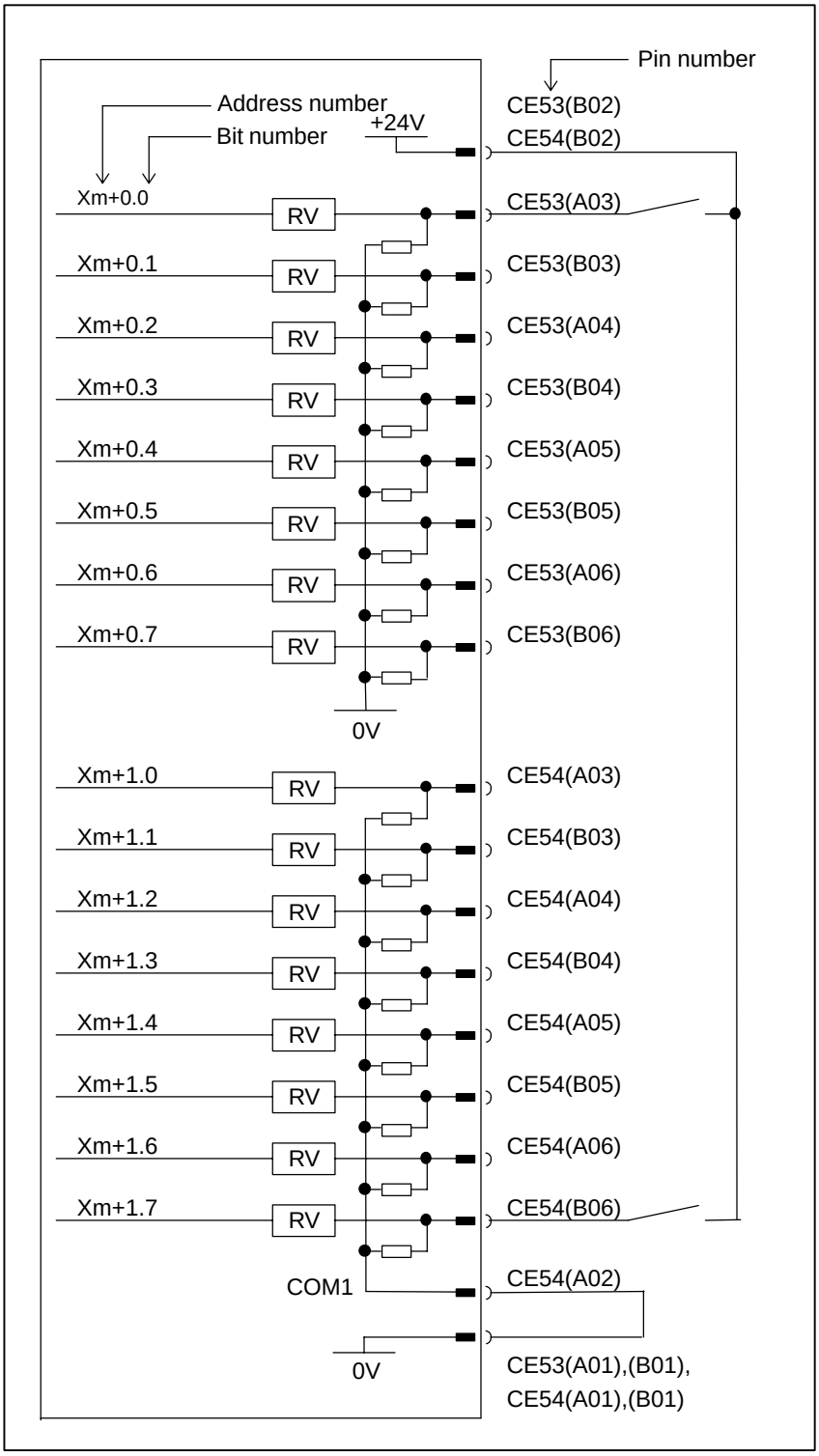

NOTE

1 Xm+1.0 through Xm+1.7 are DI pins for which a common voltage can be selected. That is, by connecting the COM1 CE54(A02) pin to the +24 V power supply, a DI signal can be input with its logical state reversed. If, however, a cable is connected to ground, it has the same effect as inputting an ON state DI signal. To prevent this from occurring, the connection of the COM1 CE54(A02) pin to the 0 V power supply is recommended whereever possible.
For safety reasons, the emergency stop signal needs to be allocated to an appropriate bit of the addresses for which the common voltage is fixed, ranging from Xm+0.0 to Xm+0.7. See “Address allocation” in Section 9.5.10 for details of how to allocate the emergency stop signal.
For unused DI pins allocated to the addresses for which the common voltage is fixed (from Xm+0.0 to Xm+0.7), the logic is fixed to “0”. For unused pins allocated to Xm+1.0 to Xm+1.7 for which the common voltage can be selected, the logic is fixed to “0” when the COM1 CE54(A02) pin is connected to the 0 V power supply. When the COM1 CE54(A02) pin is connected to the +24 V power supply, the logic is fixed to “1”. The logic of the unused pins allocated to Xm+1.0 to Xm+1.7 is variable when the contact of the COM1 CE54(A02) pin is open.

2 An output DC voltage of +24 V at CE53 (B02) and CE54 (B02) is for DI signals. Do not supply 24 VDC to these pins from the outside.

9.5.5 DI (Matrix Input Signal) Connection

○ A maximum of 56 points are provided.

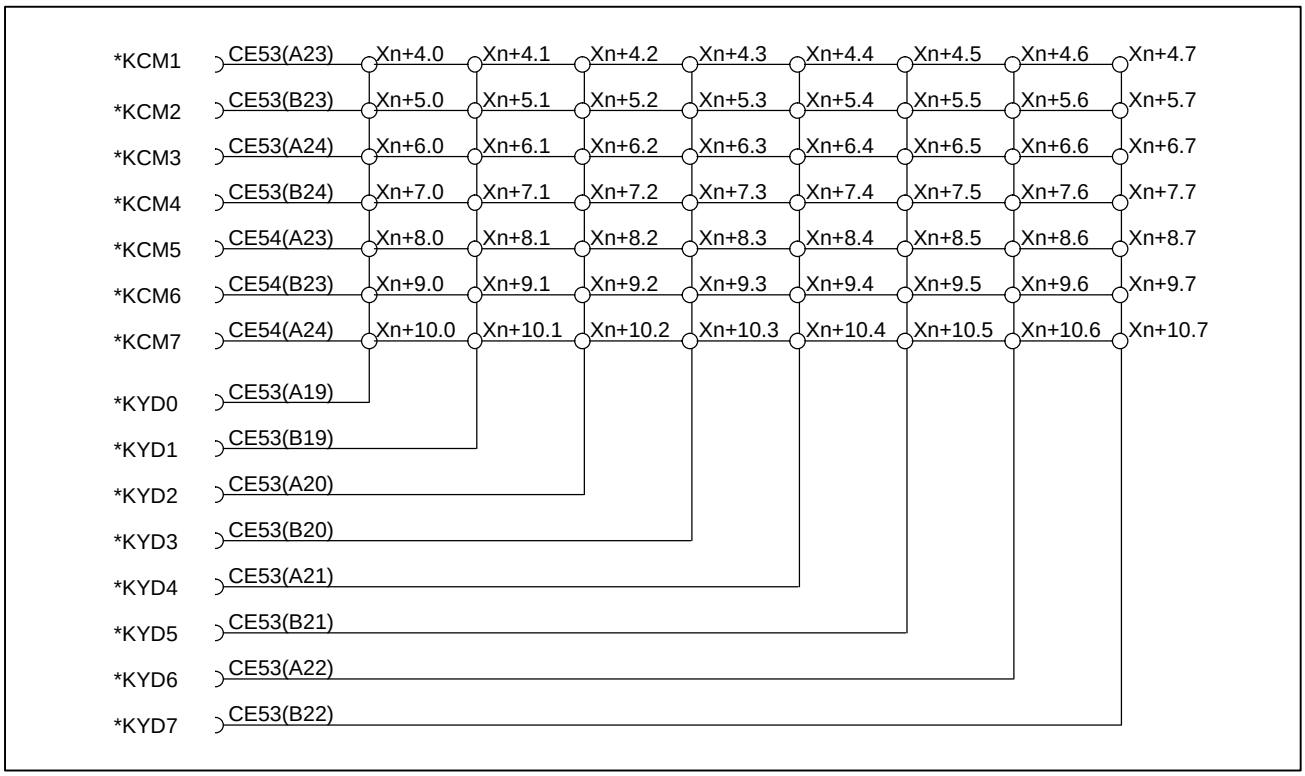

NOTE

Detour prevention diodes must be incorporated for matrix signal input, as shown in the following figure. Otherwise, only two signals can be input at the same time. Inputting three or more signals simultaneously without using detour prevention diodes may result in data input errors.

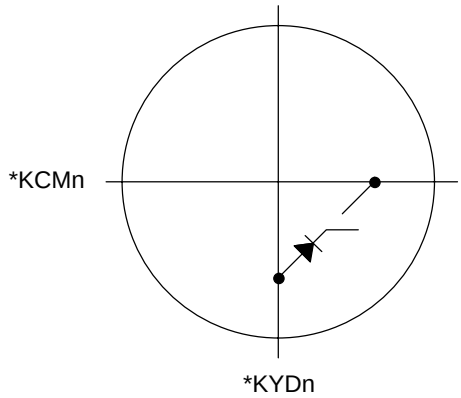

9.5.6 DO (Output Signal) Connection

○ A maximum of 56 points are provided.

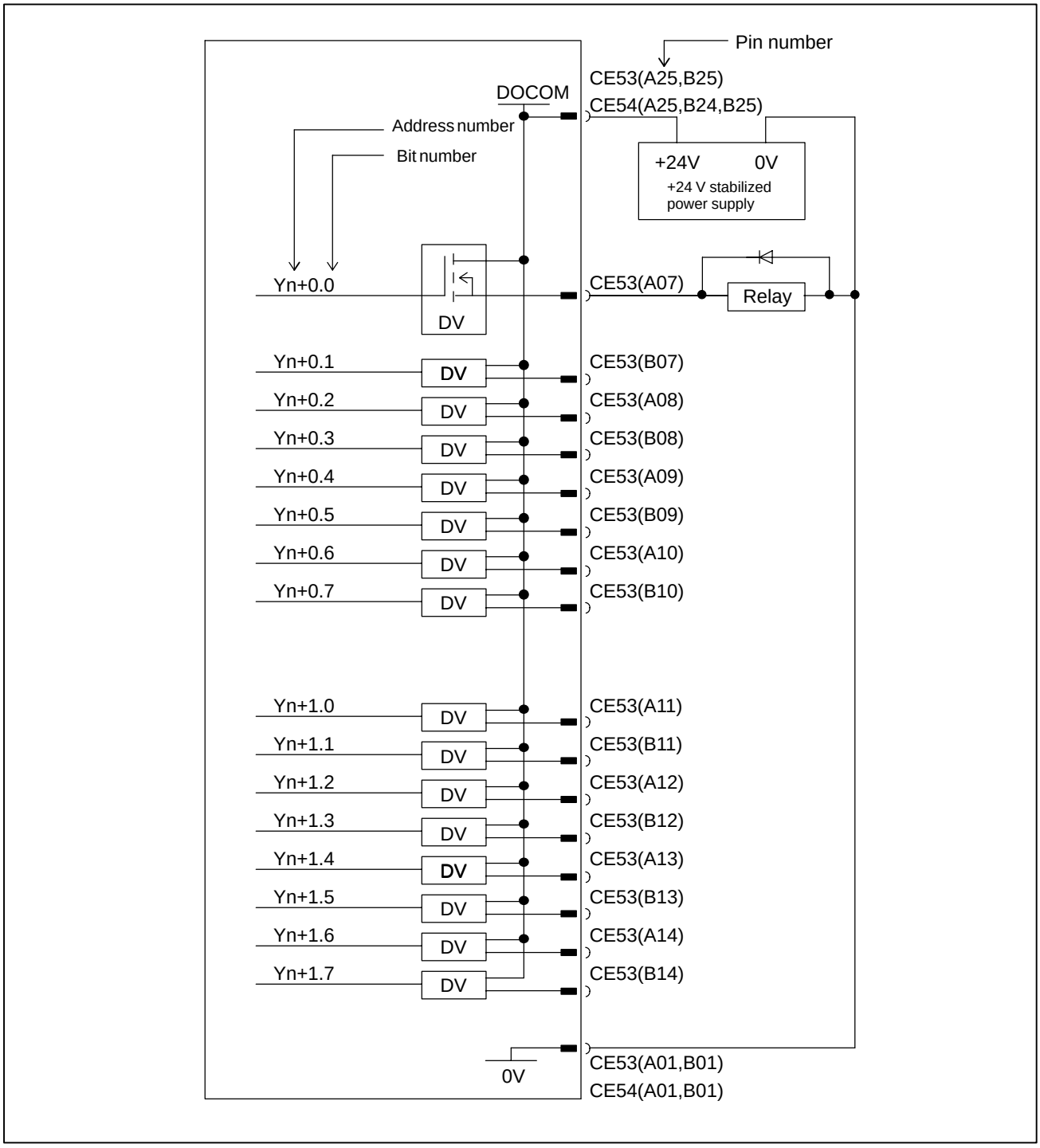

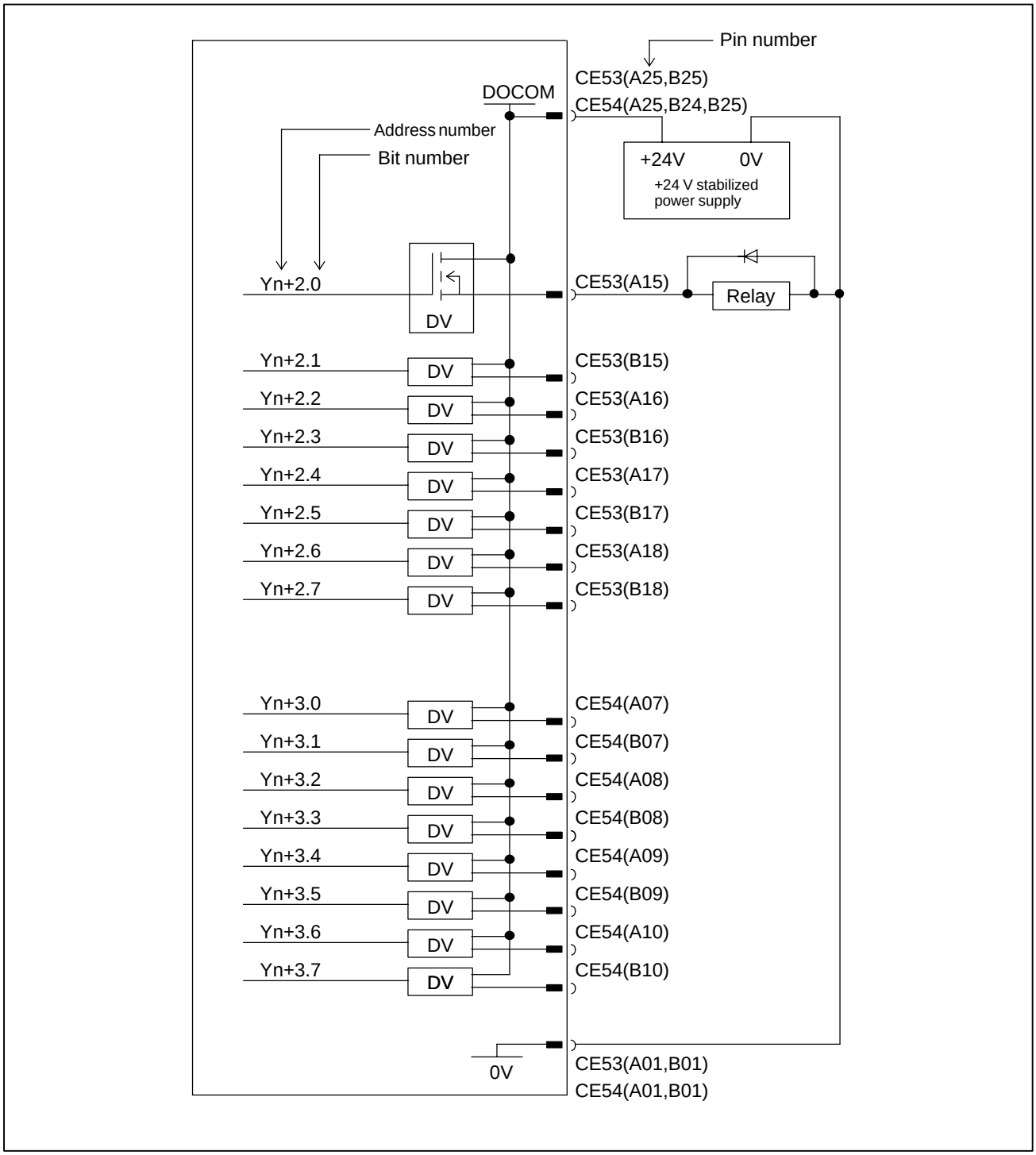
Pin number
CE53(A25,B25)
CE54(A25,B24,B25)
DOCOM
Address number
Bit number
+24V
0V
+24 V stabilized power supply
Yn+2.0
DV
CE53(A15)
Relay
Yn+2.1
CE53(B15)
Yn+2.2
CE53(A16)
Yn+2.3
CE53(B16)
Yn+2.4
CE53(A17)
Yn+2.5
CE53(B17)
Yn+2.6
CE53(A18)
Yn+2.7
CE53(B18)
Yn+3.0
CE54(A07)
Yn+3.1
CE54(B07)
Yn+3.2
CE54(A08)
Yn+3.3
CE54(B08)
Yn+3.4
CE54(A09)
Yn+3.5
CE54(B09)
Yn+3.6
CE54(A10)
Yn+3.7
CE54(B10)
0V
CE53(A01,B01)
CE54(A01,B01)

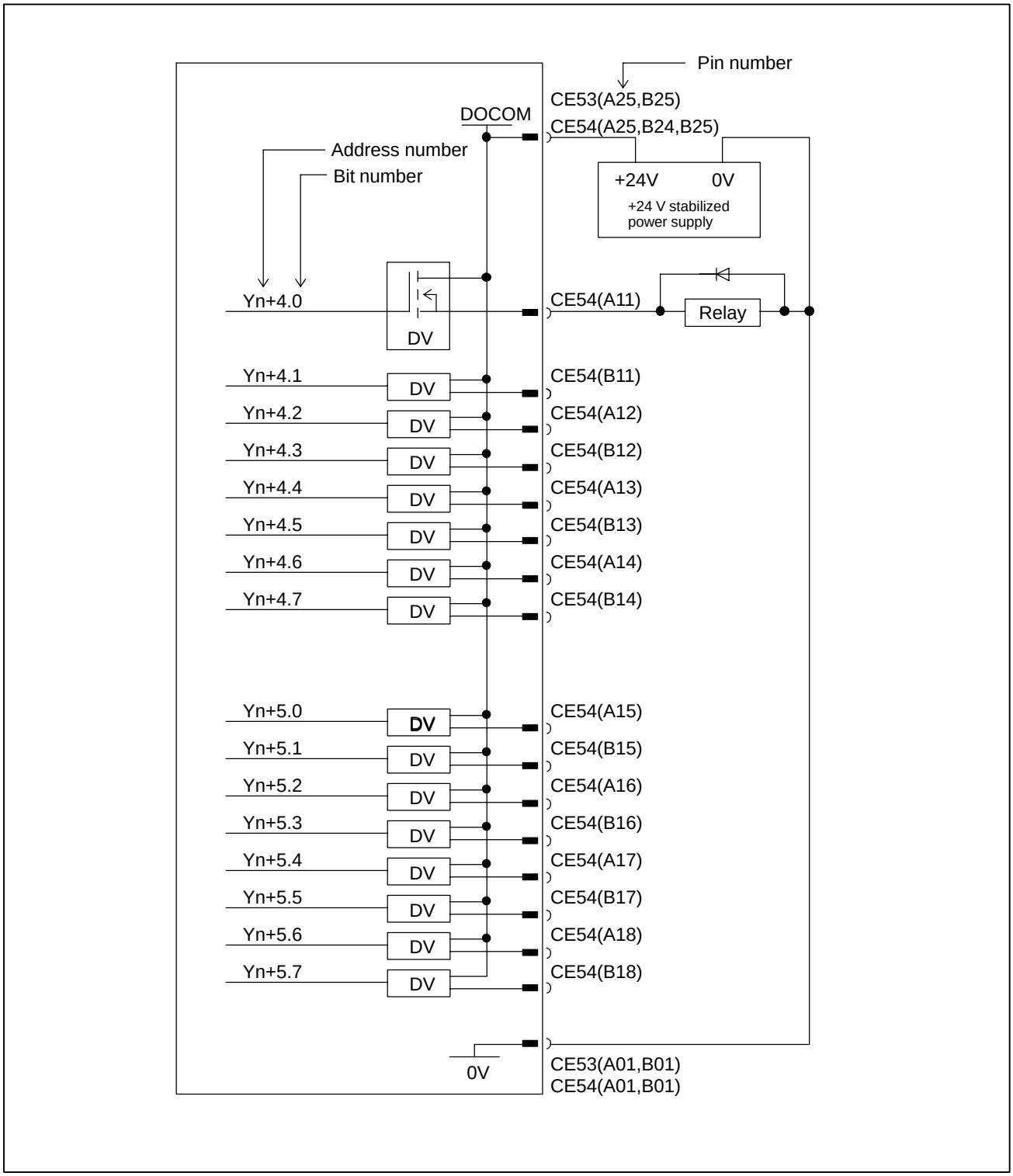
Pin number
CE53(A25,B25)
CE54(A25,B24,B25)
DOCOM
Address number
Bit number
+24V
0V
+24 V stabilized power supply
Yn+4.0
DV
CE54(A11)
Relay
Yn+4.1
CE54(B11)
Yn+4.2
CE54(A12)
Yn+4.3
CE54(B12)
Yn+4.4
CE54(A13)
Yn+4.5
CE54(B13)
Yn+4.6
CE54(A14)
Yn+4.7
CE54(B14)
Yn+5.0
CE54(A15)
Yn+5.1
CE54(B15)
Yn+5.2
CE54(A16)
Yn+5.3
CE54(B16)
Yn+5.4
CE54(A17)
Yn+5.5
CE54(B17)
Yn+5.6
CE54(A18)
Yn+5.7
CE54(B18)
0V
CE53(A01,B01)
CE54(A01,B01)

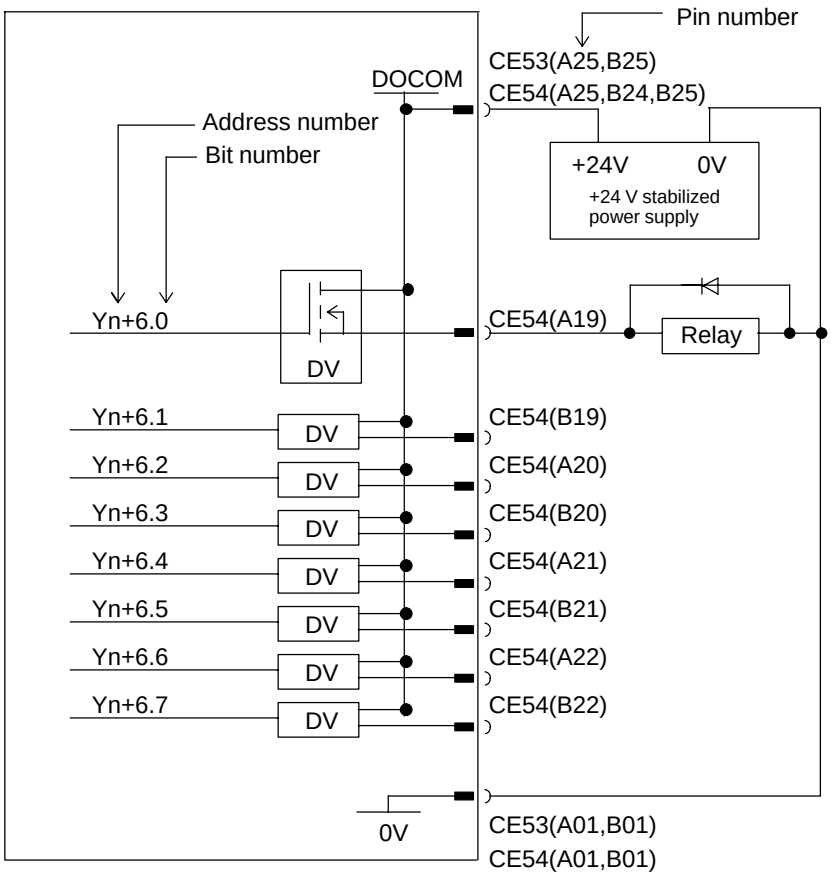

9.5.7 Manual Pulse Generator Connection

For details of the connection of the manual pulse generator, see Section 9.4.15.

9.5.8
External View

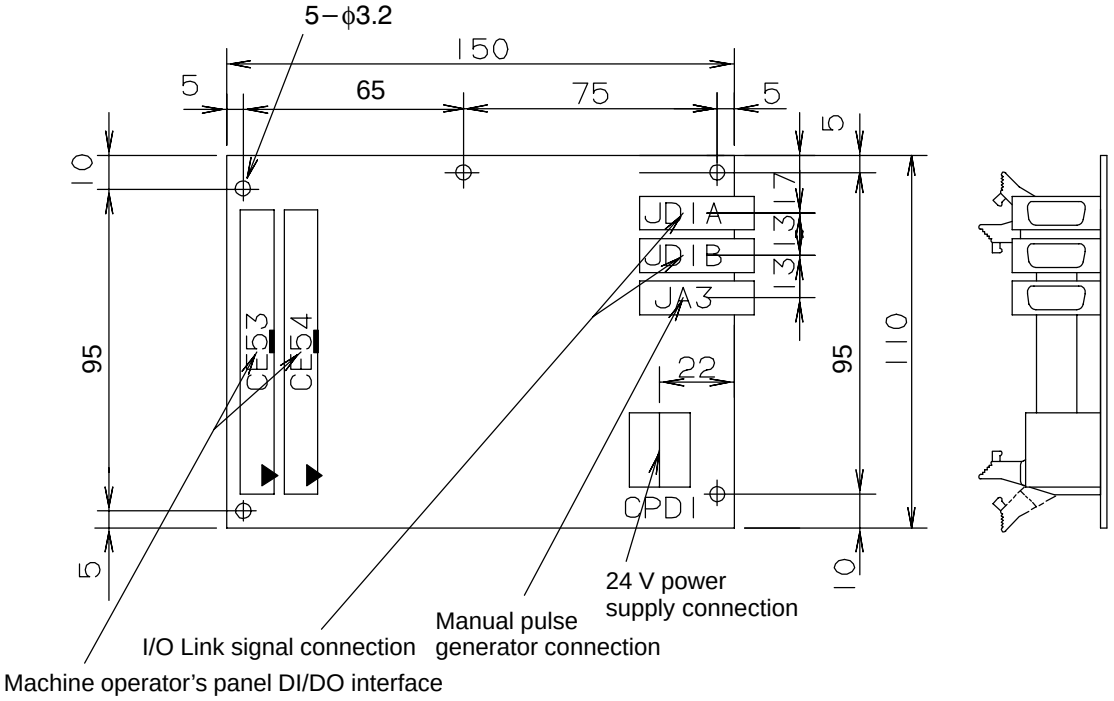

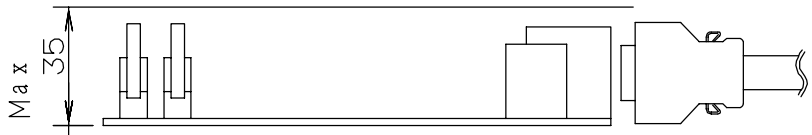

Note) Lead wires and other components are mounted on the rear face of the printed circuit board. Ensure that printed circuit boards are spaced 5 mm or more from one another to prevent interference.

▌ : Polarity guide
▶ : A1 pin mark

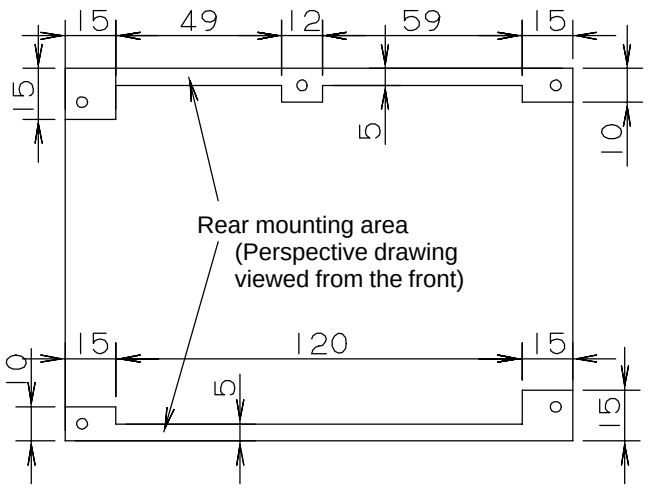

9.5.9 Specifications

Installation specifications

Ambient temperature	During operation 0°C to 58°C During storage and transportation –20°C to 60°C
Temperature change	Max. 1.1°C/min.
Relative humidity	Normal : 75% or less Short term (1 month or less) : 95% or less
Vibration	During operation : 0.5 G or less
Environment	Ordinary machining factory environment (Special consideration is required when installing the module in a dusty location or where highly concentrated cutting lubricant or organic solvent is used.)
Other requirements	(1) Install the I/O module in a fully enclosed cabinet.

Ordering specifications

Item	Specification	Remarks
Operator's panel I/O module	A20B–2002–0470	General–purpose DI: 16 points Matrix DI: 56 points DO: 56 points MPG interface is supported.
Fuse (replacement part)	A03B–0815–K001	1 A

Module specifications

Item	Specification	Remarks
General–purpose DI	16 points	24–V input
Matrix DI	56 points (8 × 7)	5–V input
DO points	56 points	24 V source type output
CNC interface	FANUC I/O Link connection	Up to 16 modules can be connected as CNC slaves. Or, a maximum of 1024 points can be supported on both the input and output sides.
MPG interface	Max. 3 units	MPG interface can be used only for the *i* series CNC.

Power supply rating

Module	Supply voltage	Current rating	Remarks
Operator's panel I/O module	24 VDC ±10% supplied from the power supply connector CPD1. The allowance of ±10% should include instantaneous voltage and ripple voltage.	0.35A	The total power consumption of DI points is included. (This is true when all general DI points are turned on.) The power consumption of DO points is not included.

DI (input signal) specifications
(General–purpose input signal)

Contact rating	30 VDC, 16 mA or more
Open circuit intercontact leakage current	1 mA or less (at 26.4 V)
Closed circuit intercontact voltage drop	2 V or less (including cable voltage drop)
Delay	Receiver delay: Max. 2 ms The time required for I/O Link transmission between the CNC and I/O module (max. 2 ms + CNC ladder scan cycle) must also be taken into account.

(Matrix input signal)

Contact rating	6 VDC, 2 mA or more
Open circuit intercontact leakage current	0.2 mA or less (at 6 V)
Closed circuit intercontact voltage drop	0.9 V or less (with a current of 1 mA)
Delay	The maximum matrix period of 16 ms, the maximum time of I/O Link transfer between CNC and I/O module of 2 ms, and the ladder scanning period (by CNC) must be considered.

NOTE

When detour prevention diodes are used, the voltage drop across closed contacts indicated above must be maintained, including the diode voltage drop.

DO (output signal) specifications

Maximum load current in ON state	200 mA or less (including momentary current)
Saturation voltage in ON state	Max. 1 V (when load current is 200 mA)
Withstand voltage	24 V +20% or less (including momentary values)
Leakage current in OFF state	20 μA or less
Delay	Driver delay: Max. 50 μs The time required for I/O Link transmission between the CNC and I/O module (max. 2 ms + CNC ladder scan cycle) must also be taken into account.

NOTE

Ensure that the maximum current per DOCOM pin (DO power supply pin) does not exceed 0.7 A.

9.5.10 Other Notes

DO signal reaction to a system alarm

If a system alarm occurs in the CNC using the operator's panel I/O module, or if I/O Link communication between the CNC and operator's panel I/O module fails, all the DO signals of the I/O module are turned off. Therefore, sufficient care is necessary when setting up the machine sequence. Also, the same phenomenon occurs if the power to the CNC or the I/O module is turned off.

Address allocation

For the operator's panel I/O module, I/O addresses are mapped as follows.

DI space map

Xm	General–purpose input signal
Xm+1	
Xm+2	Reserved
Xm+3	
Xm+4	Matrix input signal
Xm+5	
Xm+6	
Xm+7	
Xm+8	
Xm+9	
Xm+10	
Xm+11	Reserved
Xm+12 (for 1st MPG)	MPG
Xm+13 (for 2nd MPG)	
Xm+14 (for 3rd MPG)	
Xm+15 (DO alarm detection)	DO alarm detection

DO space map

Yn	Output signal
Yn+1	
Yn+2	
Yn+3	
Yn+4	
Yn+5	
Yn+6	
Yn+7	Reserved

The operator's panel I/O module is allocated a group of DI addresses (16 bytes) and a group of DO addresses (8 bytes). This address allocation is explained below.

The MPG interface (MPG counter) occupies DI space from Xm+12 through Xm+14. These addresses are fixed, and Xm+12 through Xm+14 must be allocated as a DI work area to enable the use of the MPG. Therefore, when using an MPG for the *i* series CNC, allocate DI addresses in units of 16 bytes. Do not use the DI space from Xm+12 through Xm+14 for Ladder; the CNC processes the MPG counter value directly.

DI address Xm+15 is used for detecting overcurrent and overheating alarms that may occur in the IC used in the DO driver. [For details, see the section describing the detection of DO (output signal) alarms.] This address is fixed, and must be allocated as a work area before it can be used. Therefore, when using this area, allocate DI addresses in units of 16 bytes.

Basically, I/O addresses can be allocated to the operator's panel I/O module freely. When allocating DI addresses, however, consider also the fixed addresses that are directly supervised by the CNC, and keep the following in mind.

Fixed addresses directly supervised by the CNC

	7	6	5	4	3	2	1	0
X0004	SKIP	ESKIP SKIP6	–MIT2 SKIP5	+MIT2 SKIP4	–MIT1 SKIP3	+MIT1 SKIP2	ZAE SKIP8	XAE SKIP7
	SKIP	ESKIP SKIP6	SKIP5	SKIP4	SKIP3	ZAE SKIP2	YAE SKIP8	XAE SKIP7
X0005								
X0006								
X0007								
X0008				*ESP				
X0009					*DEC4	*DEC3	*DEC2	*DEC1

The upper row indicates those signals used for the T series. Those in the lower row are for the M series.

When DI addresses are allocated in units of 16 bytes, starting at X0008

X0008	General–purpose input signal	← *ESP fixed signal
X0009		← *DECn fixed signal
X0010	Reserved	
X0011		
X0012	Matrix input signal	
X0013		
X0014		
X0015		
X0016		
X0017		
X0018		
X0019	Reserved	
X0020(for 1st MPG)	MPG	
X0021(for 2nd MPG)		
X0022(for 3rd MPG)		
X0023(DO alarm detection)	DO alarm detection	

Although fixed signals such as SKIP cannot be used, allocating DI addresses starting from X0008 allows the *DECn signal to be used and the *ESP fixed signal to be allocated to an address for which the common voltage is fixed to 24 V. (Fixed signals cannot be allocated to the for the matrix input signals.)

Turning the DO (output signal) power on and off (DOCOM)

All the DO signals can be turned off simultaneously by turning off (opening) the DO (output signal) power supply pin “DOCOM”. Doing so causes the DO signal status to change as shown below.

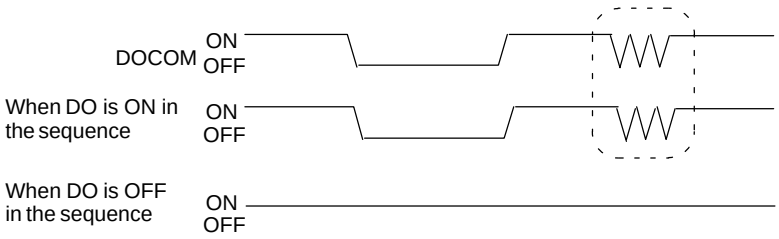

NOTE

When the DO signal is in the ON state in the sequence, the ON or OFF state of the DOCOM pin determines the state of the signal, as indicated by the dotted lines in the above figure. Do not turn off the +24 V supply, provided by the CPD1 to the I/O module, during the operation. Turning off the +24 V supply would cause a CNC communication alarm. When turning on the power, the +24 V supply to the I/O module must be turned on before or at the same time as the power supply to the CNC. When turning off the power, the +24 V supply to the I/O module must be turned off after or at the same time as the power supply to the CNC.

Parallel DO (output signal) connection

The DO load current can be doubled by connecting two DO points in parallel and turning them on and off simultaneously in sequence, as shown in the figure below. The maximum load current per DI point is 200 mA. Connecting two DO points in parallel and turning them on at the same time produces a current of 400 mA. Note that, however, when two DO points are connected in parallel, the leakage current also doubles while they are off (max. 40 μA).

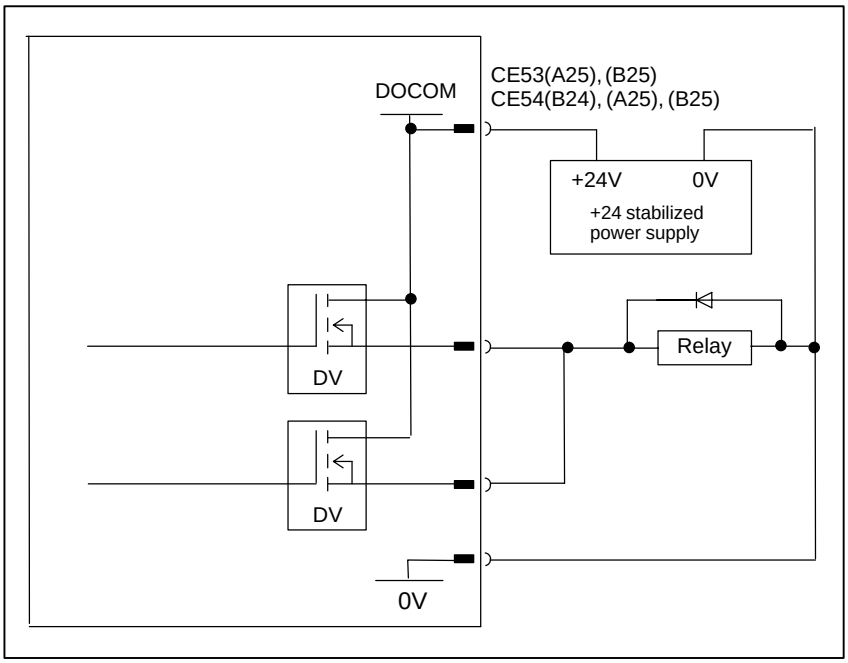

DO (output signal) alarm detection

The DO driver of the I/O module is capable of detecting an overcurrent and measuring its own temperature. If an accident, such as connecting the cable to ground, causes an abnormal increase in the load current or in the driver temperature, a protection circuit, which is provided for each DO driver (1 byte), is activated which keeps the DO signal for the relevant 1 byte in the OFF state until the cause of the problem is eliminated. Even if this occurs, the CNC and the I/O module continue operating. The DI address (Xm+15) identifies which DO driver has detected an alarm. The following table shows the correspondence between the DI address (Xm+15) bits and the DO addresses. Bit value “1” indicates that the corresponding DO driver has detected an alarm. The contents of the Xm+15 area can be checked by using the DGN screen of the CNC or by performing the alarm processing for the area in advance by using Ladder. This helps alarm detection and recovery.

Alarm detection address and bit	DO address	Remarks
Xm+15.0	Yn+0	
Xm+15.1	Yn+1	
Xm+15.2	Yn+2	
Xm+15.3	Yn+3	
Xm+15.4	Yn+4	
Xm+15.5	Yn+5	
Xm+15.6	Yn+6	
Xm+15.7	Yn+7	Reserved

9.6 CONNECTION OF OPERATOR'S PANEL I/O MODULE AND POWER MAGNETICS CABINET I/O MODULE

The difference between the operator's panel I/O module and the power magnetics cabinet I/O module lies in whether an interface to a manual pulse generator is provided. The power magnetics cabinet does not provide an interface to a manual pulse generator.

9.6.1 Overall Connection Diagram

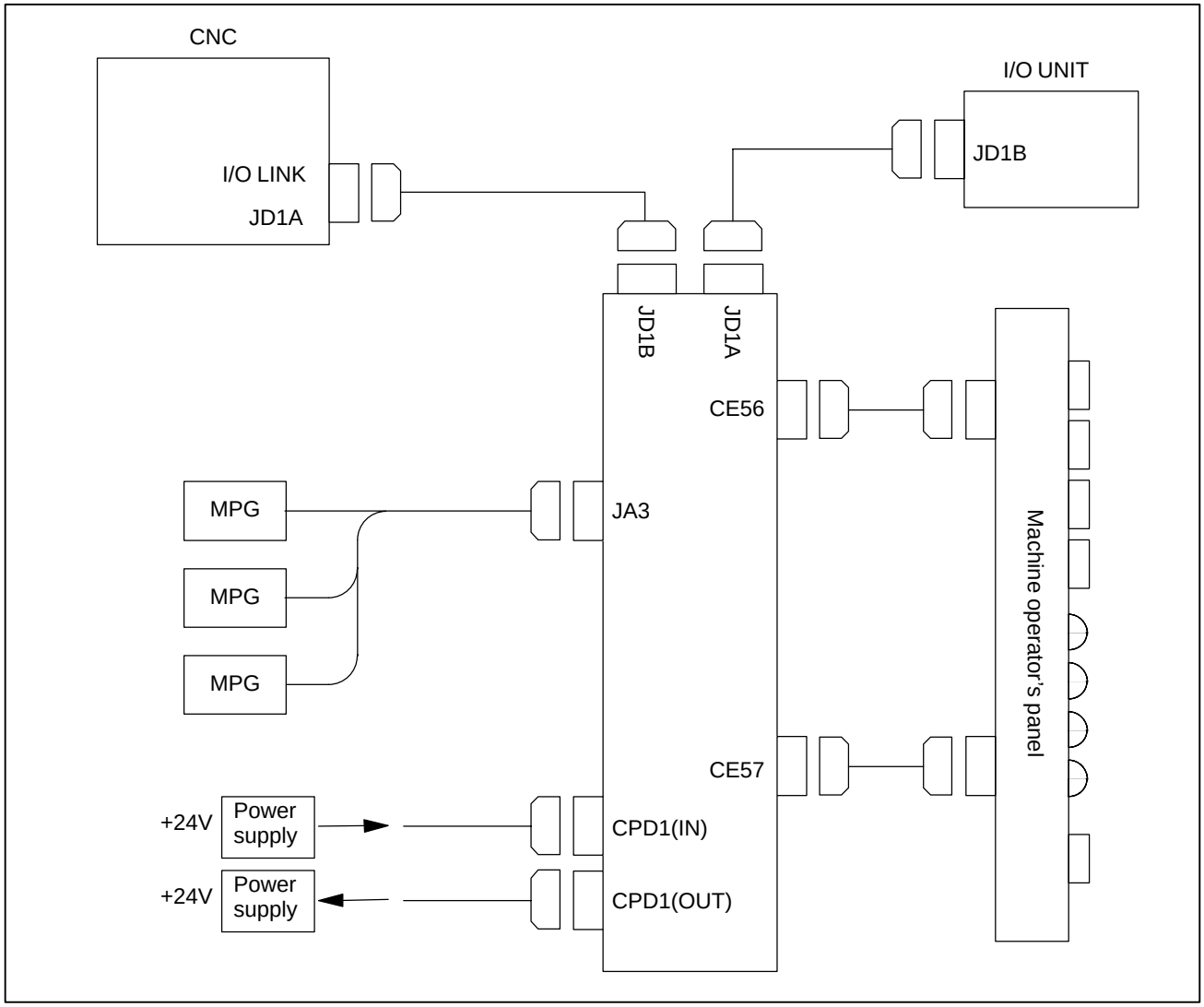

NOTE

The MPG can be connected to this operator's panel I/O module only when the *i* series CNC is used. When the operator's panel I/O module is used together with a unit (connector panel I/O module) connected to the I/O Link supporting another MPG interface, only the MPG interface of the unit (module) closest to the CNC connected to the I/O Link is enabled. The following screw type connectors cannot be used to connect the I/O Link or MPG.

Connectors that cannot be used on the cable side

	Specification	**Manufacturer**
Connector	FI–20–CV7	Hirose Electric Co., Ltd.
Connector case and connector	FI30–20S–CV7	Hirose Electric Co., Ltd.

9.6.2 Power Connection

Provide the CPD1 (IN) connector, shown below, with the power necessary for the printed circuit board operation and that for DI operation. To facilitate power division, the power is output to CPD1 (OUT) exactly as it is input from CPD1 (IN). When power division is required, use CPD1 (OUT).
Up to 1.0 A can be supplied by branching.

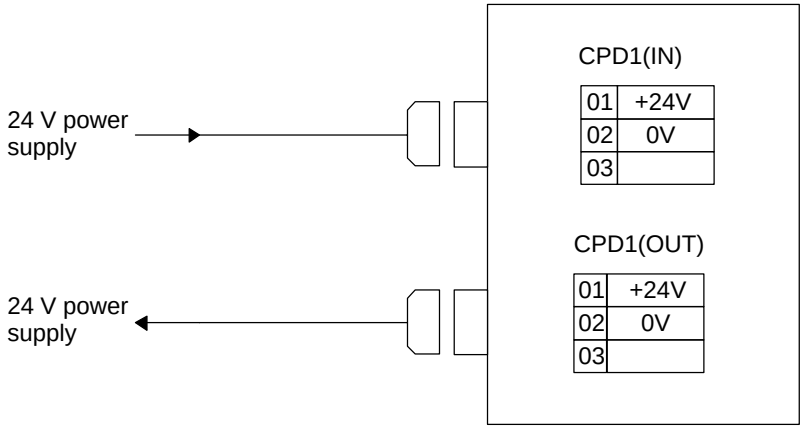

Recommended cable–side connector: A02B–0120–K324
(including the following connector housing and case)
(Housing: Japan AMP 1–178288–3)
(Contacts: Japan AMP 1–175218–5)

NOTE

The specification of the power supply connector CPD1 (IN) is the same as that for CPD1 (OUT). There are no indications on the printed circuit board to distinguish between the IN and OUT connectors. Do not turn off the +24 V supply to the connector during operation. Turning off the +24 V supply will cause a CNC communication alarm. When turning on the power, the +24 V supply to the I/O module must be turned on before or at the same time as the power supply to the CNC. When turning off the power, the +24 V supply to the I/O module must be turned off after or at the same time as the power supply to the CNC.

9.6.3 DI/DO Connector Pin Arrangement

CE56

	A	B
01	0V	+24V
02	Xm+0.0	Xm+0.1
03	Xm+0.2	Xm+0.3
04	Xm+0.4	Xm+0.5
05	Xm+0.6	Xm+0.7
06	Xm+1.0	Xm+1.1
07	Xm+1.2	Xm+1.3
08	Xm+1.4	Xm+1.5
09	Xm+1.6	Xm+1.7
10	Xm+2.0	Xm+2.1
11	Xm+2.2	Xm+2.3
12	Xm+2.4	Xm+2.5
13	Xm+2.6	Xm+2.7
14	DICOM0	
15		
16	Yn+0.0	Yn+0.1
17	Yn+0.2	Yn+0.3
18	Yn+0.4	Yn+0.5
19	Yn+0.6	Yn+0.7
20	Yn+1.0	Yn+1.1
21	Yn+1.2	Yn+1.3
22	Yn+1.4	Yn+1.5
23	Yn+1.6	Yn+1.7
24	DOCOM	DOCOM
25	DOCOM	DOCOM

CE57

	A	B
01	0V	+24V
02	Xm+3.0	Xm+3.1
03	Xm+3.2	Xm+3.3
04	Xm+3.4	Xm+3.5
05	Xm+3.6	Xm+3.7
06	Xm+4.0	Xm+4.1
07	Xm+4.2	Xm+4.3
08	Xm+4.4	Xm+4.5
09	Xm+4.6	Xm+4.7
10	Xm+5.0	Xm+5.1
11	Xm+5.2	Xm+5.3
12	Xm+5.4	Xm+5.5
13	Xm+5.6	Xm+5.7
14		DICOM5
15		
16	Yn+2.0	Yn+2.1
17	Yn+2.2	Yn+2.3
18	Yn+2.4	Yn+2.5
19	Yn+2.6	Yn+2.7
20	Yn+3.0	Yn+3.1
21	Yn+3.2	Yn+3.3
22	Yn+3.4	Yn+3.5
23	Yn+3.6	Yn+3.7
24	DOCOM	DOCOM
25	DOCOM	DOCOM

Flat cable–side connector specification:
A02B–0120–K342
(HIF3BB–50D–2.54R (Hirose Electric Co., Ltd.))
50 contacts
Cable material specification:
A02B–0120–K886
(61–meter, 50–pin cable
(Hitachi Cable, Ltd. or Oki Electric Cable Co., Ltd.))

NOTE

An output DC voltage of +24 V at CE56 (B01) and CE57 (B01) is for DI signals. Do not supply 24 VDC to these pins from the outside.

9.6.4 DI (General–purpose Input Signal) Connection

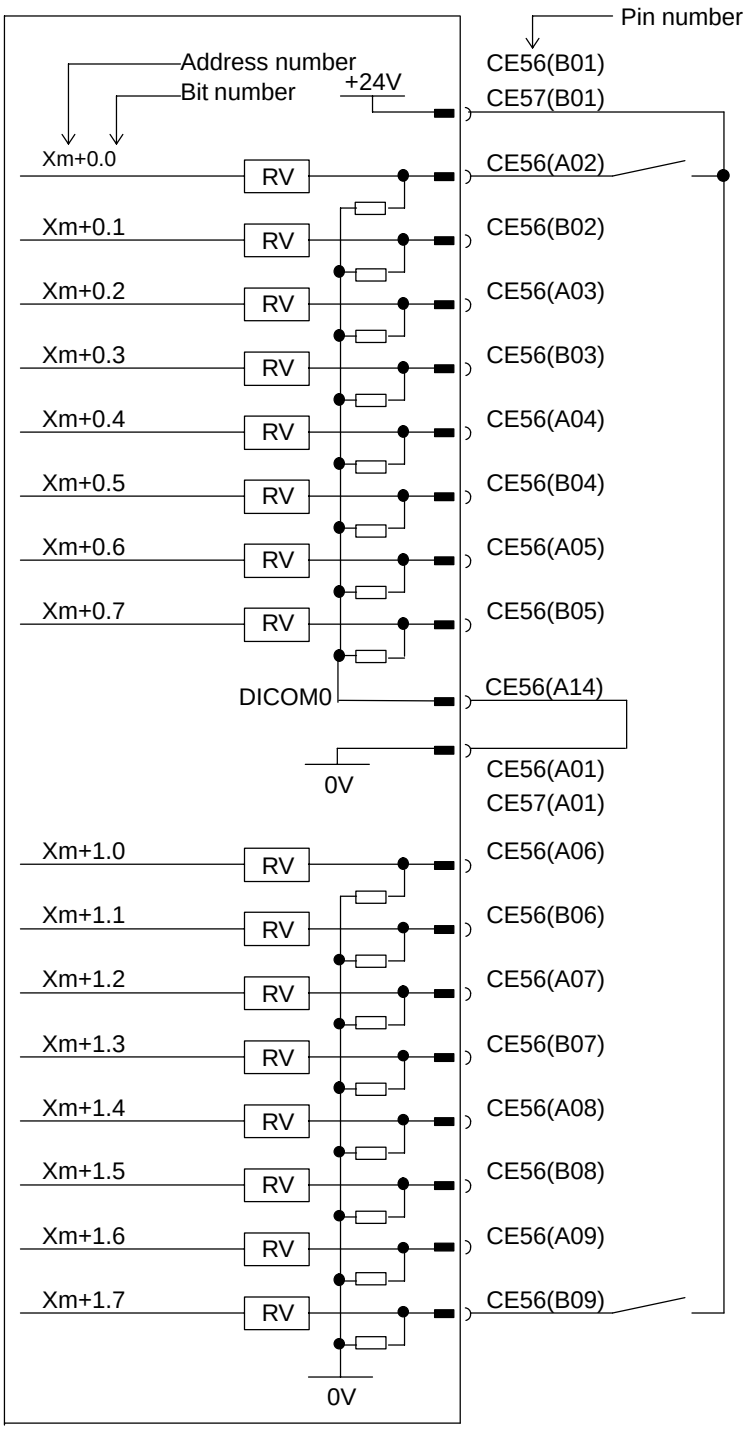

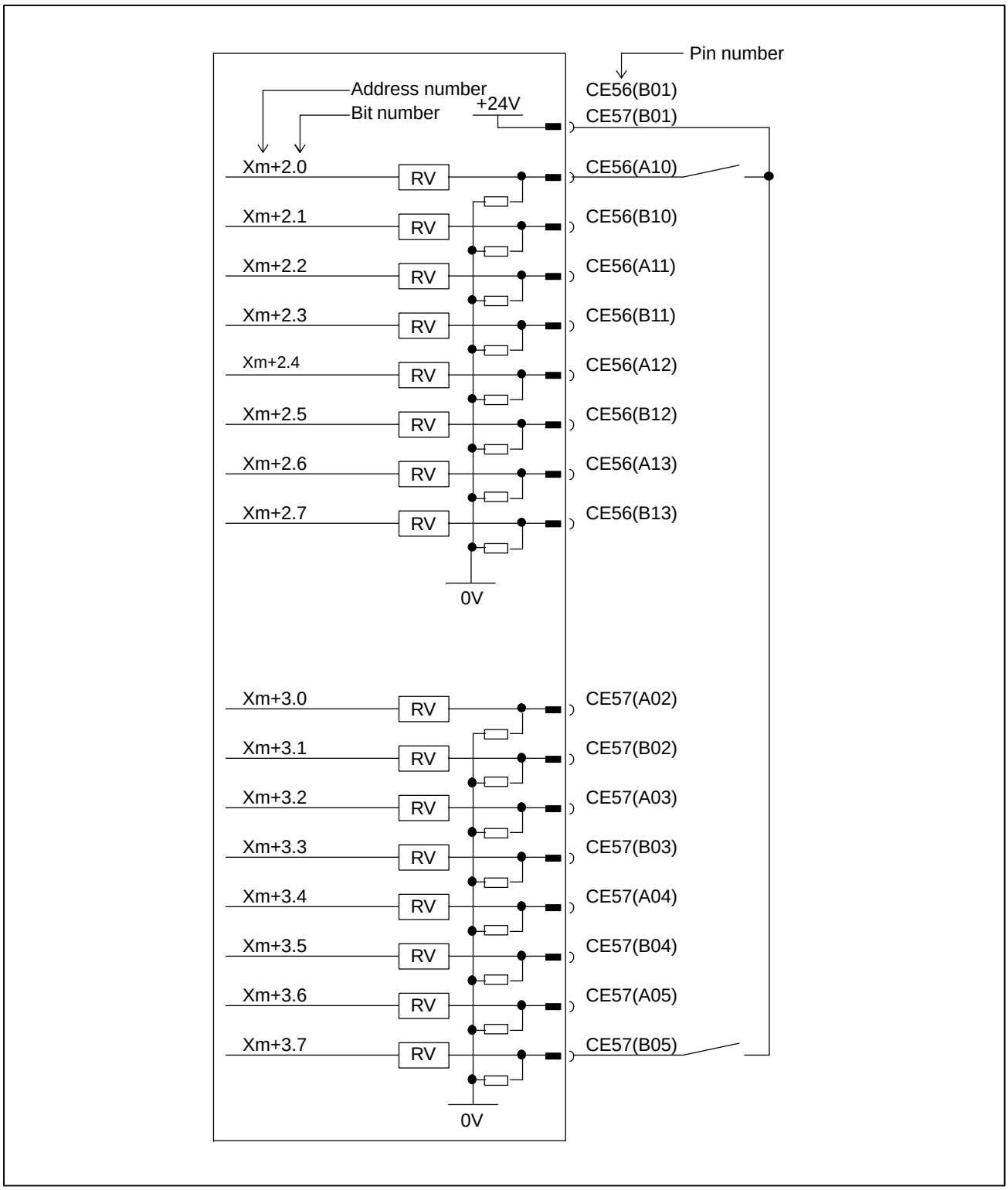
Pin number
Address number
Bit number
+24V
CE56(B01)
CE57(B01)
Xm+2.0
Xm+2.1
Xm+2.2
Xm+2.3
Xm+2.4
Xm+2.5
Xm+2.6
Xm+2.7
RV
CE56(A10)
CE56(B10)
CE56(A11)
CE56(B11)
CE56(A12)
CE56(B12)
CE56(A13)
CE56(B13)
0V
Xm+3.0
Xm+3.1
Xm+3.2
Xm+3.3
Xm+3.4
Xm+3.5
Xm+3.6
Xm+3.7
CE57(A02)
CE57(B02)
CE57(A03)
CE57(B03)
CE57(A04)
CE57(B04)
CE57(A05)
CE57(B05)
0V

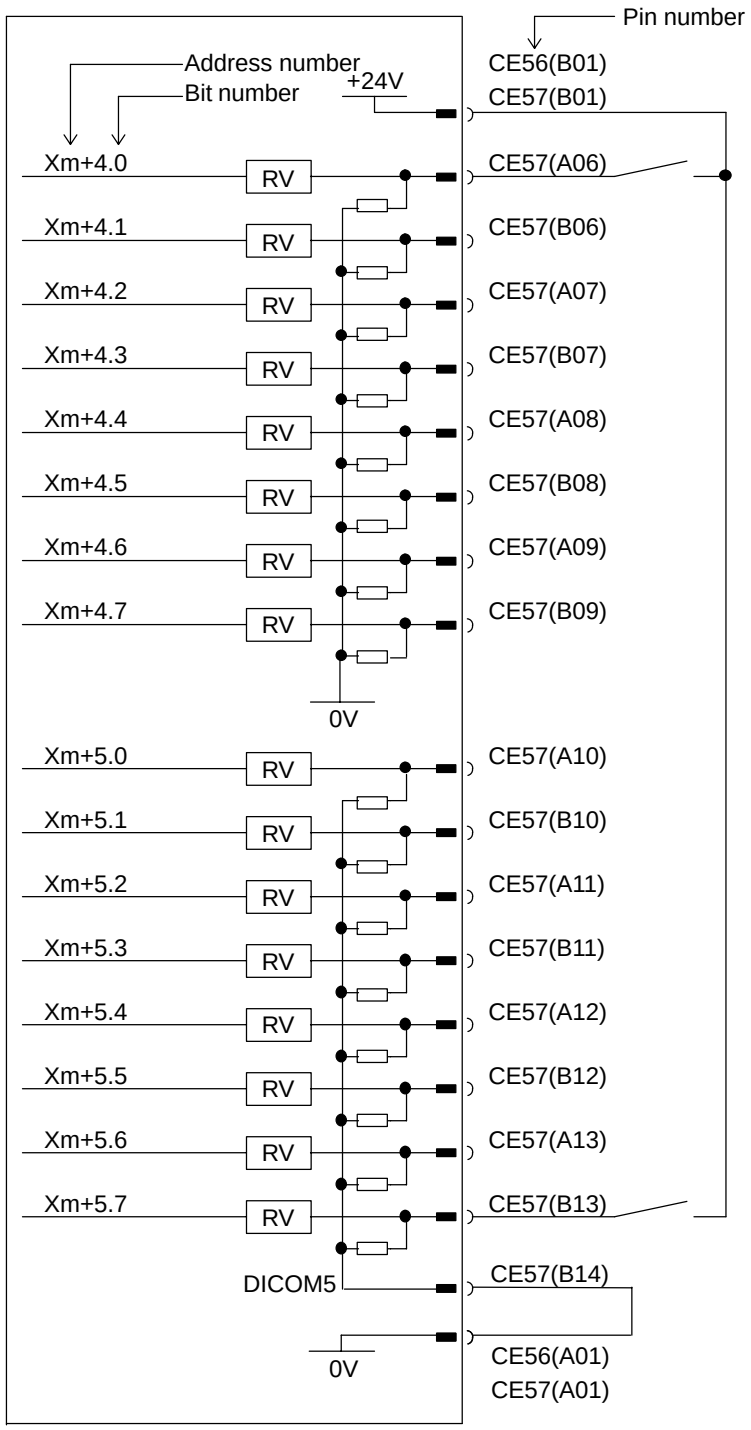
Pin number
Address number
Bit number
+24V
CE56(B01)
CE57(B01)
Xm+4.0
RV
CE57(A06)
Xm+4.1
CE57(B06)
Xm+4.2
CE57(A07)
Xm+4.3
CE57(B07)
Xm+4.4
CE57(A08)
Xm+4.5
CE57(B08)
Xm+4.6
CE57(A09)
Xm+4.7
CE57(B09)
0V
Xm+5.0
CE57(A10)
Xm+5.1
CE57(B10)
Xm+5.2
CE57(A11)
Xm+5.3
CE57(B11)
Xm+5.4
CE57(A12)
Xm+5.5
CE57(B12)
Xm+5.6
CE57(A13)
Xm+5.7
CE57(B13)
DICOM5
CE57(B14)
0V
CE56(A01)
CE57(A01)

NOTE

1 Xm+0.0 through Xm+0.7 and Xm+5.0 through Xm+5.7 are DI pins for which a common voltage can be selected. That is, by connecting the DICOM0 CE56(A14) or DICOM5 CE57(B14) pin to the +24 V power supply, a DI signal can be input with its logical state reversed. If, however, a cable is connected to ground, it has the same effect as inputting an ON state DI signal. To prevent this from occurring, the connection of the DICOM0 CE56(A14) and DICOM5 CE57(B14) pins to the 0 V power supply is recommended whereever possible.
For safety reasons, the emergency stop signal needs to be allocated to an appropriate bit of the addresses for which the common voltage is fixed. See “Address allocation” in Section 9.6.9 for details of how to allocate the emergency stop signal.
For unused DI pins allocated to the addresses for which the common voltage is fixed, the logic is fixed to “0”. For unused pins allocated to the addresses for which the common voltage can be selected, the logic is fixed to “0” when the DICOM0 CE56(A14) or DICOM5 CE57(B14) pin is connected to the 0 V power supply. When the DICOM0 CE56(A14) or DICOM5 CE57(B14) pin is connected to the +24 V power supply, the logic is fixed to “1”. The logic of the unused pins is variable when the contacts of the DICOM0 CE56(A14) and DICOM5 CE57(B14) pins are open.

2 An output DC voltage of +24 V at CE56 (B01) and CE57 (B01) is for DI signals. Do not supply 24 VDC to these pins from the outside.

9.6.5 DO (Output Signal) Connection

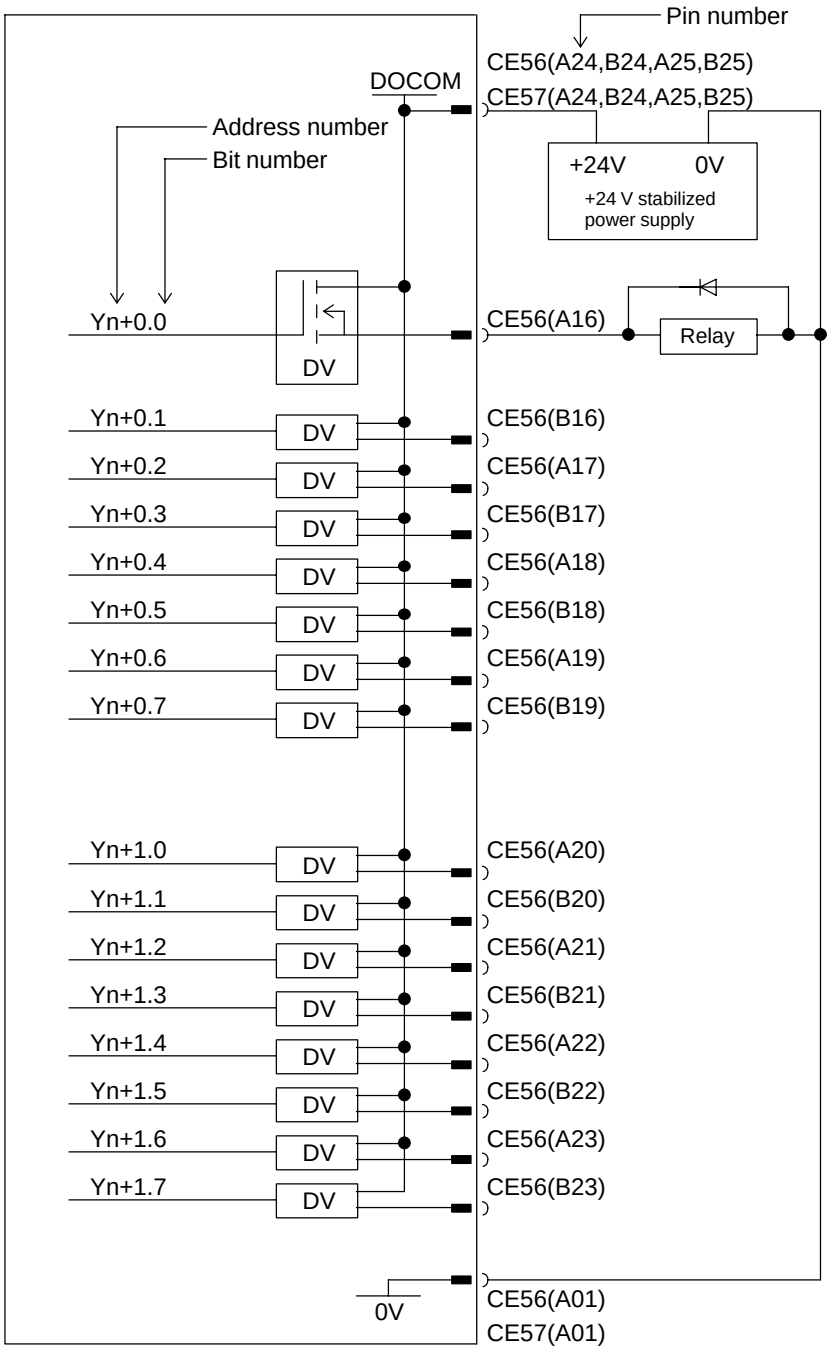

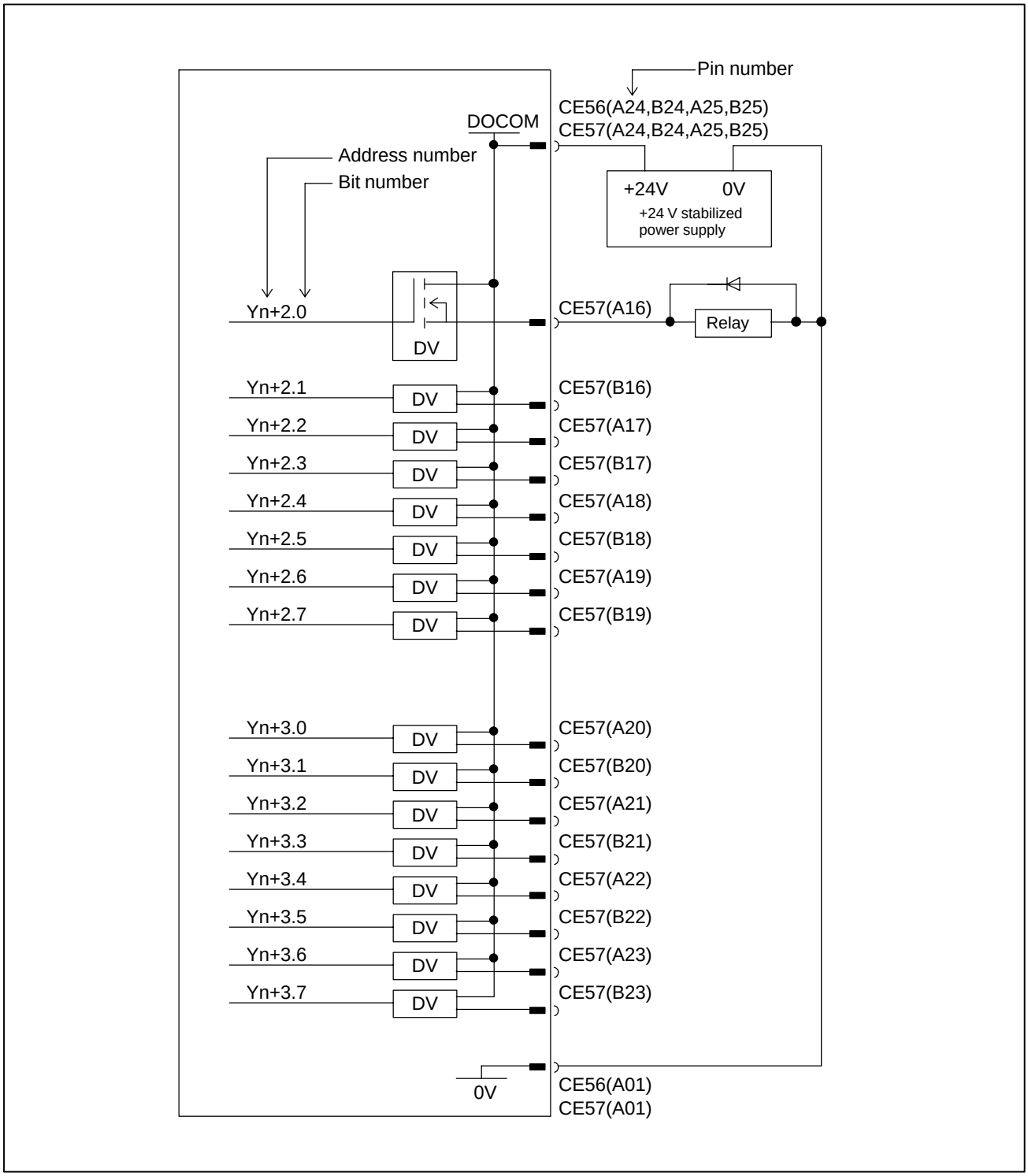
Pin number
CE56(A24,B24,A25,B25)
CE57(A24,B24,A25,B25)
DOCOM
Address number
Bit number
+24V
0V
+24 V stabilized power supply
Yn+2.0
DV
CE57(A16)
Relay
Yn+2.1
CE57(B16)
Yn+2.2
CE57(A17)
Yn+2.3
CE57(B17)
Yn+2.4
CE57(A18)
Yn+2.5
CE57(B18)
Yn+2.6
CE57(A19)
Yn+2.7
CE57(B19)
Yn+3.0
CE57(A20)
Yn+3.1
CE57(B20)
Yn+3.2
CE57(A21)
Yn+3.3
CE57(B21)
Yn+3.4
CE57(A22)
Yn+3.5
CE57(B22)
Yn+3.6
CE57(A23)
Yn+3.7
CE57(B23)
0V
CE56(A01)
CE57(A01)

9.6.6 Manual Pulse Generator Connection

For details of the connection of the manual pulse generator, see Section 9.4.15.

9.6.7 External View

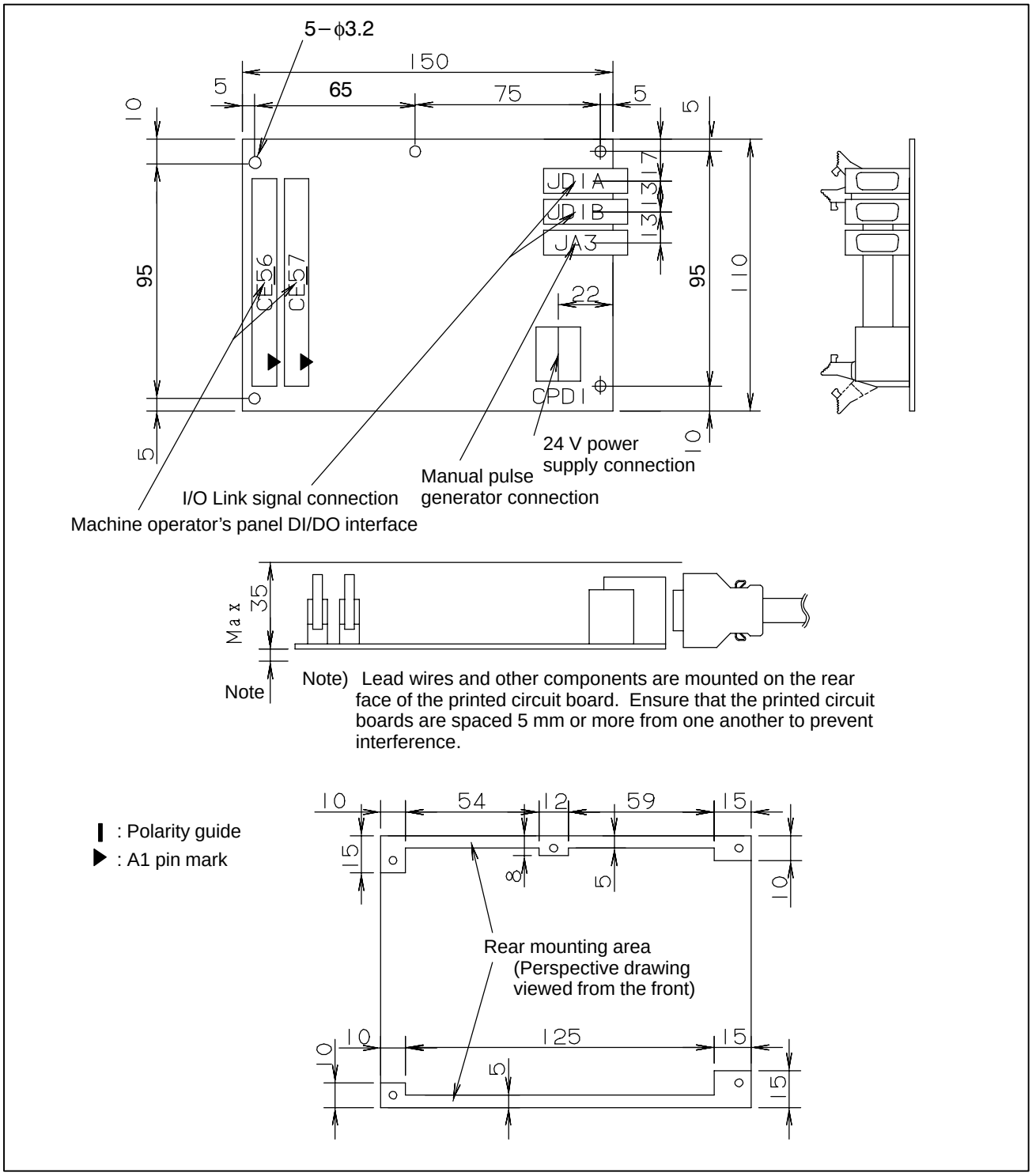

9.6.8 Specifications

Installation specifications

Ambient temperature	During operation 0° to 58°C During storage and transportation –20°C to 60°C
Temperature change	Max. 1.1°C/min.
Relative humidity	Normal: 75% or less Short term (1 month or less): 95% or less
Vibration	During operation: 0.5 G or less
Environment	Ordinary machining factory environment (Special consideration is required when installing the module in a dusty place or where highly concentrated cutting lubricant or organic solvent is used.)
Other requirements	(1) Install the I/O module in a fully enclosed cabinet.

Ordering specifications

Item	Specification	Remarks
Operator's panel I/O module (with MPG interface)	A20B–2002–0520	DI: 48 points DO: 32 points MPG interface is supported.
Power magnetics panel I/O module (without MPG interface)	A20B–2002–0521	DI: 48 points DO: 32 points MPG interface is not supported.
Fuse (replacement part)	A03B–0815–K001	1 A

Module specifications

Item	Specification	Remarks
DI points	48 points	24 V input
DO points	32 points	24 V source type output
CNC interface	FANUC I/O Link connection	Up to 16 modules can be connected as CNC slaves. Or, a maximum of 1024 points can be supported on both the input and output sides.
MPG interface	Max. 3 units	MPG interface can be used only for the *i* series CNC.

Power supply rating

Module	Supply voltage	Power supply rating	Remarks
Operator's panel I/O module and power magnetics cabinet I/O module	24 VDC ±10% is supplied from power supply connector CPD1. The tolerance of ±10% includes momentary and ripple currents.	0.3 A+7.3 mA×DI	DI = number of DI points in the ON state

DI (input signal) specifications
(general–purpose input signal)

Contact rating	30 VDC, 16 mA or more
Open circuit intercontact leakage current	1 mA or less (at 26.4 V)
Closed circuit intercontact voltage drop	2 V or less (including cable voltage drop)
Delay	Receiver delay: Max. 2 ms The time required for I/O Link transmission between the CNC and I/O module (max. 2 ms + CNC ladder scan cycle) must also be taken into account.

DO (output signal) specifications

Maximum load current in ON state	200 mA or less (including momentary current)
Saturation voltage in ON state	Max. 1 V (when load current is 200 mA)
Withstand voltage	24 V +20% or less (including momentary values)
Leakage current in OFF state	20 μA or less
Delay	Driver delay: Max. 50 μs The time for I/O Link transmission between the CNC and I/O module (max. 2 ms + CNC ladder scan cycle) must also be taken into account.

NOTE

Ensure that the maximum current per DOCOM pin (DO power supply pin) does not exceed 0.7 A.

9.6.9 Other Notes

DO signal reaction to a system alarm

If a system alarm occurs in a CNC using this 48/32–point I/O module, or if I/O Link communication between the CNC and operator's panel I/O module fails, all the DO signals of the I/O module are turned off. Therefore, due care must be taken when setting up the machine sequence. Also, the same phenomenon occurs if the power of the CNC or the I/O module is turned off.

Address allocation

For the operator's panel I/O module, I/O addresses are mapped as follows.

DI space map

Xm	Input signal
Xm+1	
Xm+2	
Xm+3	
Xm+4	
Xm+5	
Xm+6	Not used
Xm+7	
Xm+8	
Xm+9	
Xm+10	
Xm+11	
Xm+12 (for 1st MPG)	MPG
Xm+13 (for 2nd MPG)	
Xm+14 (for 3rd MPG)	
Xm+15 (DO alarm detection)	DO alarm detection

DO space map

Yn	Output signal
Yn+1	
Yn+2	
Yn+3	

Basically, this 48/32–point I/O module is allocated a group of DI addresses (16 bytes) and a group of DO addresses (4 bytes). This address allocation is explained below.

The MPG interface (MPG counter) occupies DI space from Xm+12 through Xm+14. These addresses are fixed, and Xm+12 through Xm+14 must be allocated as a DI work area to enable the use of the MPG. Therefore, when using an MPG for the *i* series CNC, allocate DI addresses in units of 16 bytes. Do not use the DI space from Xm+12 through Xm+14 for Ladder; the CNC processes the MPG counter value directly.

DI address Xm+15 is used for detecting overcurrent and overheating alarms that occur in the IC used in the DO driver. (For details, see the section describing the detection of DO (output signal) alarms.) This address is fixed, and must be allocated as a work area before it can be used. When using this area, therefore, allocate DI addresses in units of 16 bytes.

Basically, I/O addresses can be allocated to the 48/32–point I/O module freely. When allocating DI addresses, however, consider also the fixed addresses that are directly supervised by the CNC, and keep the following in mind.

Fixed addresses directly supervised by the CNC

	7	6	5	4	3	2	1	0
X0004	SKIP	ESKIP SKIP6	–MIT2 SKIP5	+MIT2 SKIP4	–MIT1 SKIP3	+MIT1 SKIP2	ZAE SKIP8	XAE SKIP7
	SKIP	ESKIP SKIP6	SKIP5	SKIP4	SKIP3	ZAE SKIP2	YAE SKIP8	XAE SKIP7
X0005								
X0006								
X0007								
X0008				*ESP				
X0009					*DEC4	*DEC3	*DEC2	*DEC1

The upper row indicates those signals used for the T series. Those in the lower row are for the M series.

When DI addresses are allocated in units of 16 bytes, starting at X0004

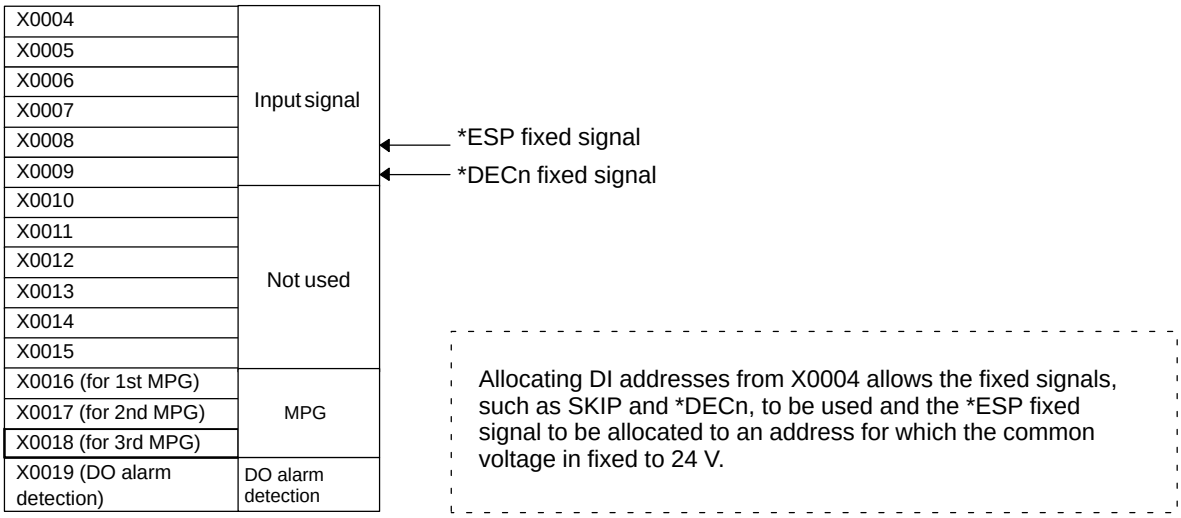

Turning the DO (output signal) power on and off (DOCOM)

All the DO signals can be turned off simultaneously by turning off (opening) the DO (output signal) power supply pin “DOCOM”. Doing so causes the DO signal status to change as shown below.

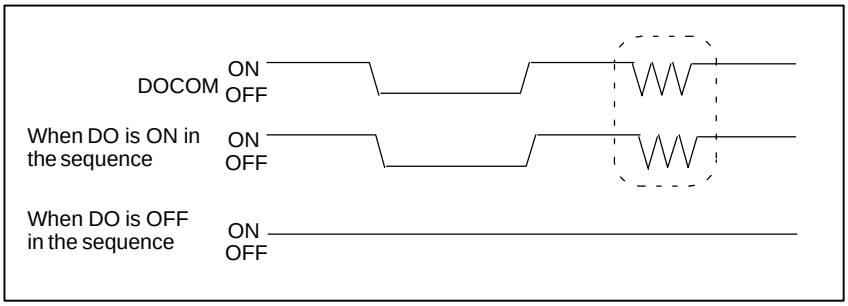

NOTE

When the DO signal is in the ON state in the sequence, the ON or OFF state of the DOCOM pin determines the state of the signal, as shown within dotted lines in the above figure. Do not turn off the +24 V supply provided by the CPD1 to the I/O module during the operation. Turning off the +24 V supply causes a CNC communication alarm. When turning on the power, the +24 V supply to the I/O module must be turned on before or at the same time as the power supply to the CNC. When turning off the power, the +24 V supply to the I/O module must be turned off after or at the same time as the power supply to the CNC.

Parallel DO (output signal) connection

The DO load current can be doubled by connecting two DO points in parallel and turning them on and off simultaneously in sequence, as shown in the figure below. The maximum load current per DI point is 200 mA. Connecting two DO points in parallel and turning them on at the same time produces a current of 400 mA. Note that, however, when two DO points are connected in parallel, the leakage current also doubles when they are off (max. 40 μA).

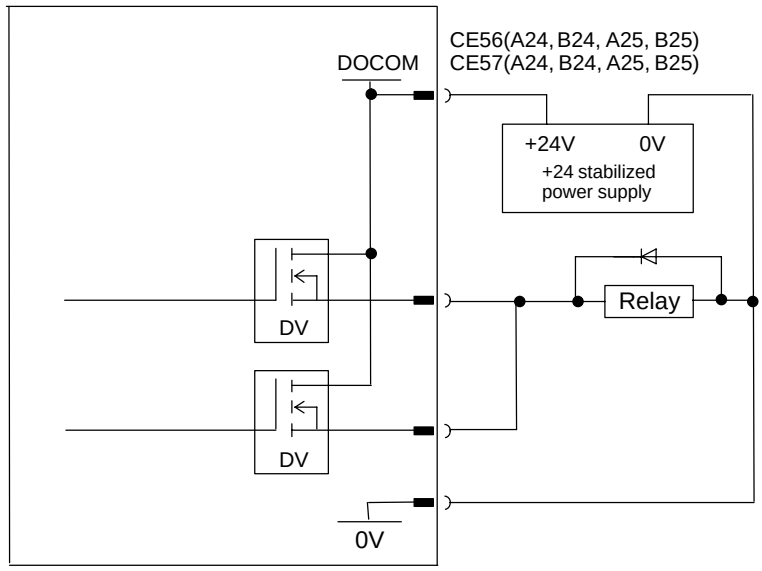

DO (output signal) alarm detection

The DO driver of the I/O module is capable of detecting an overcurrent and measuring its own temperature. If an accident, such as the connecting of the cable to ground, causes an abnormal increase in the load current or in the driver temperature, a protection circuit, which is provided for each DO driver (1 byte), is activated and keeps the DO signal for the relevant 1 byte in the OFF state until the cause of the problem is eliminated. Even if this occurs, the CNC and I/O module continue operating. The DI address (Xm+15) identifies the DO driver which has detected the alarm. The following table shows the correspondence between the DI address (Xm+15) bits and the DO addresses. Bit value “1” indicates that the corresponding DO driver has detected an alarm. The contents of the Xm+15 area can be checked by using the DGN screen of the CNC or by performing alarm processing for the area in advance by using Ladder. This helps alarm detection and recovery.

Alarm detection address and bit	DO address	Remarks
Xm+15.0	Yn+0	
Xm+15.1	Yn+1	
Xm+15.2	Yn+2	
Xm+15.3	Yn+3	
Xm+15.4	Yn+4	Reserved
Xm+15.5	Yn+5	Reserved
Xm+15.6	Yn+6	Reserved
Xm+15.7	Yn+7	Reserved

9.7 CONNECTION OF SOURCE OUTPUT TYPE CONNECTION UNIT

The operator's panel connection unit (A16B–2202–0730, 0731), which connects to the control unit via the FANUC I/O Link, acts as an interface with the machine operator's panel.
Connectors CM51, CM52, CMB3, and CMB4, used to interface with the operator's panel, feature an electrical interface and pin assignment which are fully compatible with those of the source type output operator's panel connection unit for the Series 15. The following two units are available with different numbers of I/O points:

Specifications	No. of input points	No. of output points
A16B–2202–0730	96	64
A16B–2202–0731	64	32

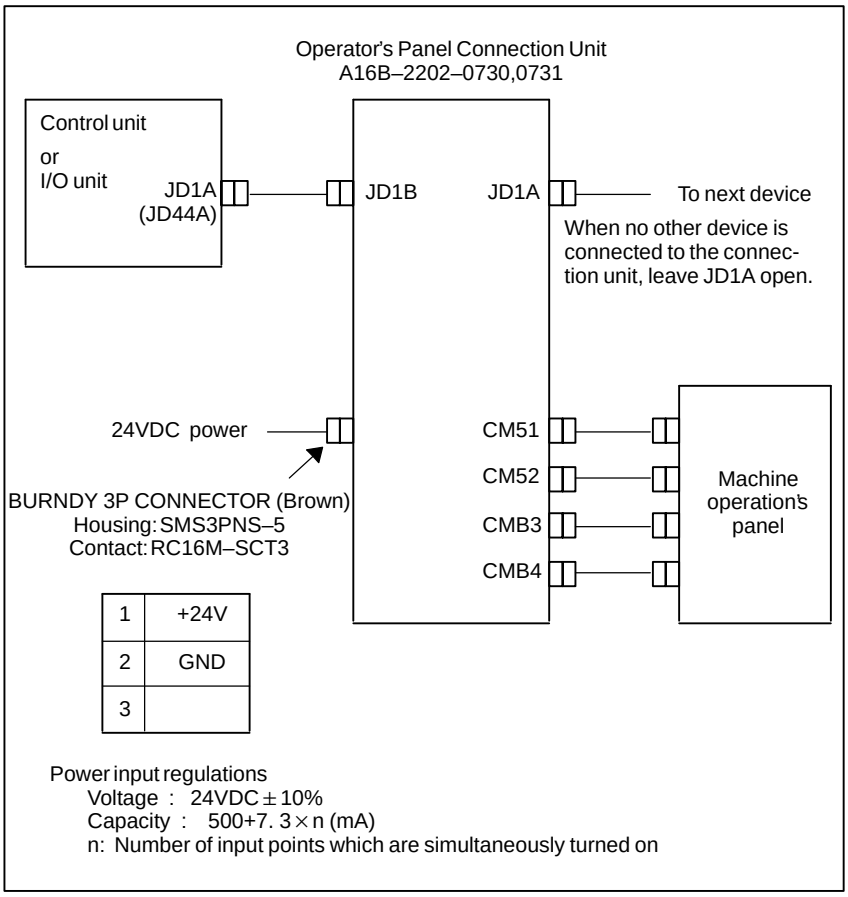

CAUTION
Use 30/0.18 (0.75 mm^2) or heavier wire as the power cable.

9.7.1 Input Signal Specifications for Source Output Type Connection Unit

Most input signals for the source output type connection unit support a sink type non–isolated interface. For some input signals, however, either sink or source type can be selected. (European safety standards demand the use of sink types.)

The machine's contacts shall conform to the following specifications:

Capacity: 30 VDC, 16 mA or higher
Intercontact leakage current in closed circuit:
1 mA or less (at 26.4 V)
Intercontact voltage drop in closed circuit:
2 V or less (including the voltage drop in the cables)

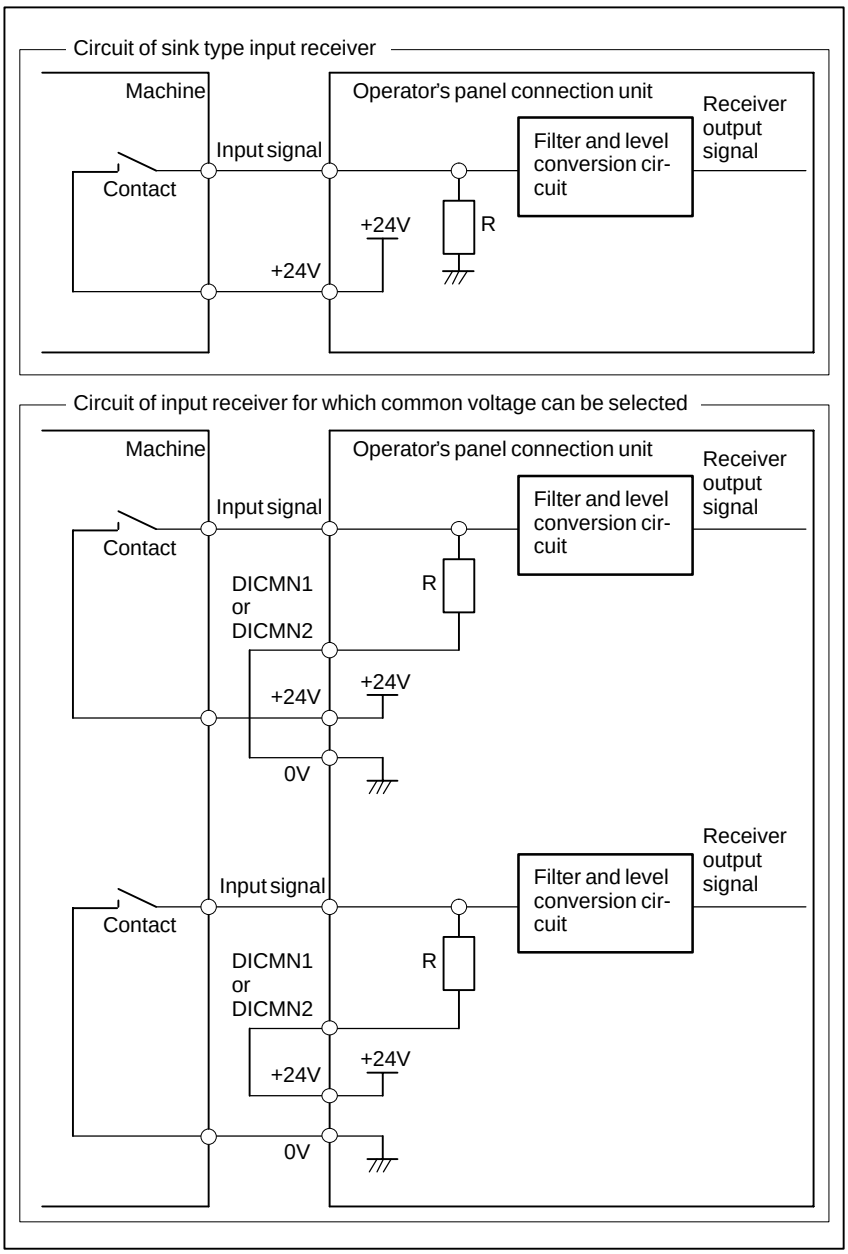

Fig. 9.7.1 (a) Receiver circuit

Always connect both DICMN1 and DICMN2 to 24 V or 0 V. Do not leave them open.

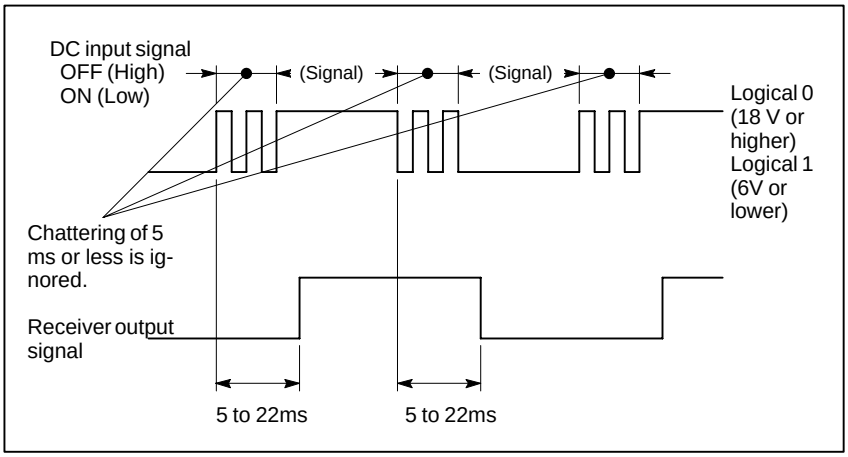

Fig. 9.7.1 (b) Signal width and delay of input signal

In the above figure, logical 0 corresponds to open contacts, while logical 1 corresponds to closed contacts.

WARNING

When a source interface is used, a ground fault in an input signal has the same effect as closing the contacts. From the viewpoint of safety, therefore, FANUC does not recommend the use of such an interface for input signals.

9.7.2 Output Signal Specifications for Source Output Type Connection Unit

The output signals shall satisfy the following:

Maximum load current when driver is on:
200 mA (including momentary values)
Saturation voltage when driver is on:
1.0 V max.
Withstand voltage: 24 V +20% (including momentary values)
Leakage current when driver is off:
100 μA

Prepare the following external power supply for the output signals:

Supply voltage: +24 V ±10%
Supply current (per board):
At least total maximum load current (including momentary values) + 100 mA
Power–on timing: At the same time as or before turning on the power to the control unit
Power–off timing: At the same time as or after turning on the power to the control unit

CAUTION

A power supply which satisfies the above specifications shall be connected to the DOCOM and 0V power supply terminals for the output signals. The maximum current that can be carried by the DOCOM pin is 2.0 A. The total load current must not exceed this value, therefore.

Output signal driver

The output signal driver used with the operator's panel connection unit can output up to eight signals.

The driver element monitors the current of each output signal. If an overcurrent is detected, the output of that signal is turned off. Once a signal has been turned off, the overcurrent will no longer exist, such that the driver turns the signal on again. Therefore, in the case of a ground fault or overload, the output of a signal will be repeatedly turned on and off. This also occurs when a load which causes a high surge current is connected.

The driver element contains an overheat detector, which turns off all eight output signals if the temperature in the device exceeds the set value as a result of an overcurrent caused by a ground fault or some other failure. This off state is held. To restore signal output, logically turn the output off then back on again, for each signal, after the temperature falls below the set value. Signal output can also be restored by turning the system power off then back on again.

On the PCB, a red LED beside the driver element lights once the overheat detection circuit operates.

NOTE

The overheat detection circuit also causes a system alarm to be issued to the CNC. (When setting pins CP1 on the PCB are closed (jumpered), this alarm is not issued to the CNC.)

Correspondence between red LEDs and DO signals

Red LED name	DO signals	Remarks
DAL1	Y q + 0.0 to Y q + 0.7	
DAL2	Y q + 1.0 to Y q + 1.7	
DAL3	Y q + 2.0 to Y q + 2.7	
DAL4	Y q + 3.0 to Y q + 3.7	
DAL5	Y q + 4.0 to Y q + 4.7	
DAL6	Y q + 5.0 to Y q + 5.7	
DAL7	Y q + 6.0 to Y q + 6.7	
DAL8	Y q + 7.0 to Y q + 7.7	

NOTE
The above red LED and alarm transfer to the CNC are supported by PCBs of version 03B and later.

If the output of a signal cannot be turned on even though the CNC diagnostic indicates that the signal is on, that signal or another signal being handled by the same element may be overloaded, thus causing the eight output signals to be turned off. In such a case, turn the system power off and eliminate the cause of the overload.

- **Driver element block diagram**

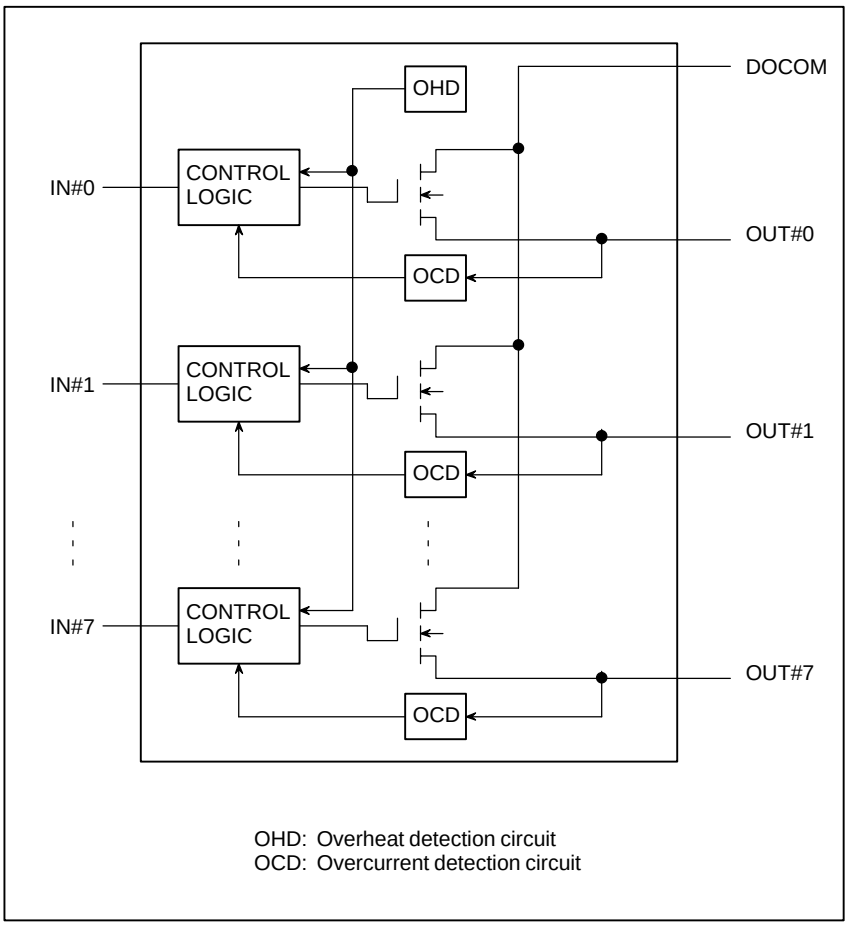

The power for operating this driver element is supplied from DOCOM (24 VDC).

Notes on output signals

CAUTION
Observe the following precautions when connecting output signals:
Output pins shall not be connected in parallel, as shown below.

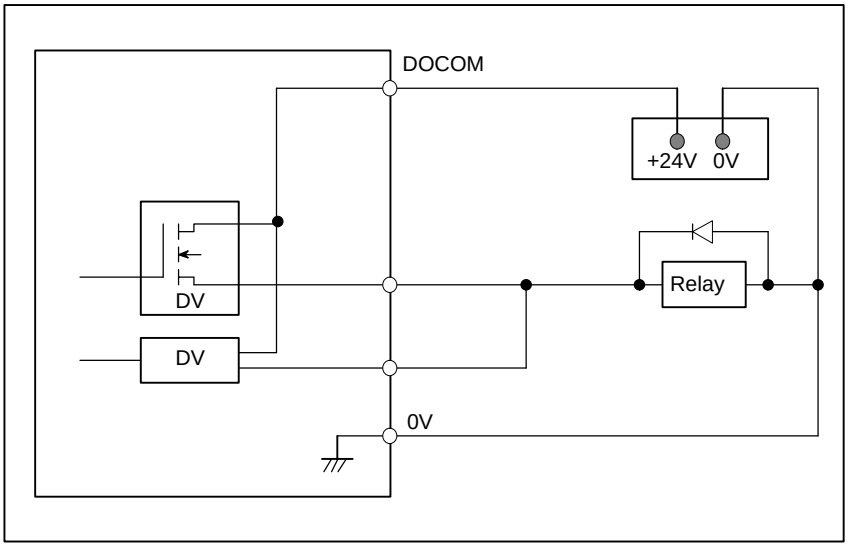

CAUTION
When using a dimming resistor, connect a diode to prevent leakage.

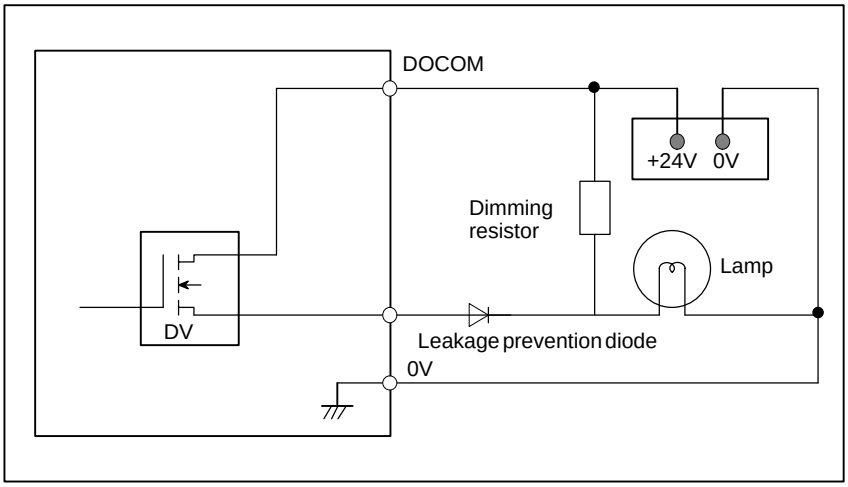

9.7.3 Connector Pin Layout for Source Output Type Connection Unit

CM51

1	DI00			33	DICMN1
2	DI03	19	DI01	34	DI02
3	DI06	20	DI04	35	DI05
4	DI11	21	DI07	36	DI10
5	DI14	22	DI12	37	DI13
6	DI17	23	DI15	38	DI16
7	DI22	24	DI20	39	DI21
8	DI25	25	DI23	40	DI24
9	DI27	26	DI30	41	DI26
10	DI32	27	DI33	42	DI31
11	DI35	28	DI36	43	DI34
12	DI40	29	DI41	44	DI37
13	DI43	30	DI44	45	DI42
14	DI46	31	DI47	46	DI45
15	DI51	32	DI52	47	DI50
16	DI54			48	DI53
17	DI56			49	DI55
18	+24V			50	DI57

CM52

1	DI60			33	0V
2	DI63	19	DI61	34	DI62
3	DI66	20	DI64	35	DI65
4	DI71	21	DI67	36	DI70
5	DI74	22	DI72	37	DI73
6	DI77	23	DI75	38	DI76
7	DI82	24	DI80	39	DI81
8	DI85	25	DI83	40	DI84
9	DI87	26	DI90	41	DI86
10	DI92	27	DI93	42	DI91
11	DI95	28	DI96	43	DI94
12	DIA0	29	DIA1	44	DI97
13	DIA3	30	DIA4	45	DIA2
14	DIA6	31	DIA7	46	DIA5
15	DIB1	32	DIB2	47	DIB0
16	DIB4			48	DIB3
17	DIB6			49	DIB5
18	+24V			50	DIB7

CMB3

1	DO00			33	0V
2	DO03	19	DO01	34	DO02
3	DO06	20	DO04	35	DO05
4	DO11	21	DO07	36	DO10
5	DO14	22	DO12	37	DO13
6	DO17	23	DO15	38	DO16
7	DO22	24	DO20	39	DO21
8	DO25	25	DO23	40	DO24
9	DO27	26	DO30	41	DO26
10	DO32	27	DO33	42	DO31
11	DO35	28	DO36	43	DO34
12	DO40	29	DO41	44	DO37
13	DO43	30	DO44	45	DO42
14	DO46	31	DO47	46	DO45
15	DO51	32	DO52	47	DO50
16	DO54			48	DO53
17	DOCOM			49	DO55
18	DICMN2			50	DOCOM

CMB4

1	DO61			14	DO60
2	DO64	8	DO62	15	DO63
3	DO67	9	DO65	16	DO66
4	DO72	10	DO70	17	DO71
5	DO75	11	DO73	18	DO74
6	DO56	12	DO76	19	DO77
7	0V	13	DO57	20	DOCOM

NOTE
When the operator's panel connection unit having 64 DIs and 32 DOs is selected, connector CMB4 is not mounted on the PCB.

DICMN1, DICMN2: Pins used to switch the DI common. Usually, jumper these pins with 0V. (input)

+24V: +24 VDC output pin. This pin shall be used only for DI signals input to the operator's panel connection unit. (output)

DOCOM: Power supply for the DO driver. All DOCOM pins are connected in the unit. (input)

I/O addresses

The following PMC addresses are assigned to the operator's panel connection unit, depending on the number of I/O points (DI/DO = 96/64 or 64/32):

[DI address]

DI: 96 points

DI: 64 points

	7	6	5	4	3	2	1	0
X p	DI07	DI06	DI05	DI04	DI03	DI02	DI01	DI00
X p+1	DI17	DI16	DI15	DI14	DI13	DI12	DI11	DI10
X p+2	DI27	DI26	DI25	DI24	DI23	DI22	DI21	DI20
X p+3	DI37	DI36	DI35	DI34	DI33	DI32	DI331	DI30
X p+4	DI47	DI46	DI45	DI44	DI43	DI42	DI41	DI40
X p+5	DI57	DI56	DI55	DI54	DI53	DI52	DI51	DI50
X p+6	DI67	DI66	DI65	DI64	DI63	DI62	DI61	DI60
X p+7	DI77	DI76	DI75	DI74	DI73	DI72	DI71	DI70
X p+8	DI87	DI86	DI85	DI84	DI83	DI82	DI81	DI80
X p+9	DI97	DI96	DI95	DI94	DI93	DI92	DI91	DI90
X p+10	DIA7	DIA6	DIA5	DIA4	DIA3	DIA2	DIA1	DIA0
X p+11	DIB7	DIB6	DIB5	DIB4	DIB3	DIB2	DIB1	DIB0

- Address p is determined by the machine tool builder.
- The common voltage can be selected for the DIs assigned to the following 20 addresses:

Address	Common signal to correspond
Xp+0.0, Xp+0.1, Xp+0.2, Xp+0.7 Xp+1.0, Xp+1.1, Xp+1.2, Xp+1.7	DICMN1
Xp+4.0 to Xp+4.7	DICMN2
Xp+11.4, Xp+11.5, Xp+11.6, Xp+11.7	DICMN1

[DO address]

DO: 64 points

DO: 32 points

	7	6	5	4	3	2	1	0
Y q	DO07	DO06	DO05	DO04	DO03	DO02	DO01	DO00
Y q+1	DO17	DO16	DO15	DO14	DO13	DO12	DO11	DO10
Y q+2	DO27	DO26	DO25	DO24	DO23	DO22	DO21	DO20
Y q+3	DO37	DO36	DO35	DO34	DO33	DO32	DO31	DO30
Y q+4	DO47	DO46	DO45	DO44	DO43	DO42	DO41	DO40
Y q+5	DO57	DO56	DO55	DO54	DO53	DO52	DO51	DO50
Y q+6	DO67	DO66	DO65	DO64	DO63	DO62	DO61	DO60
Y q+7	DO77	DO76	DO75	DO74	DO73	DO72	DO71	DO70

Address q is determined by the machine tool builder.

For details of address assignment, refer to the FANUC PMC Programming Manual (Ladder Language) (B–61863E).

9.7.4 Dimensions of Source Output Type Connection Unit

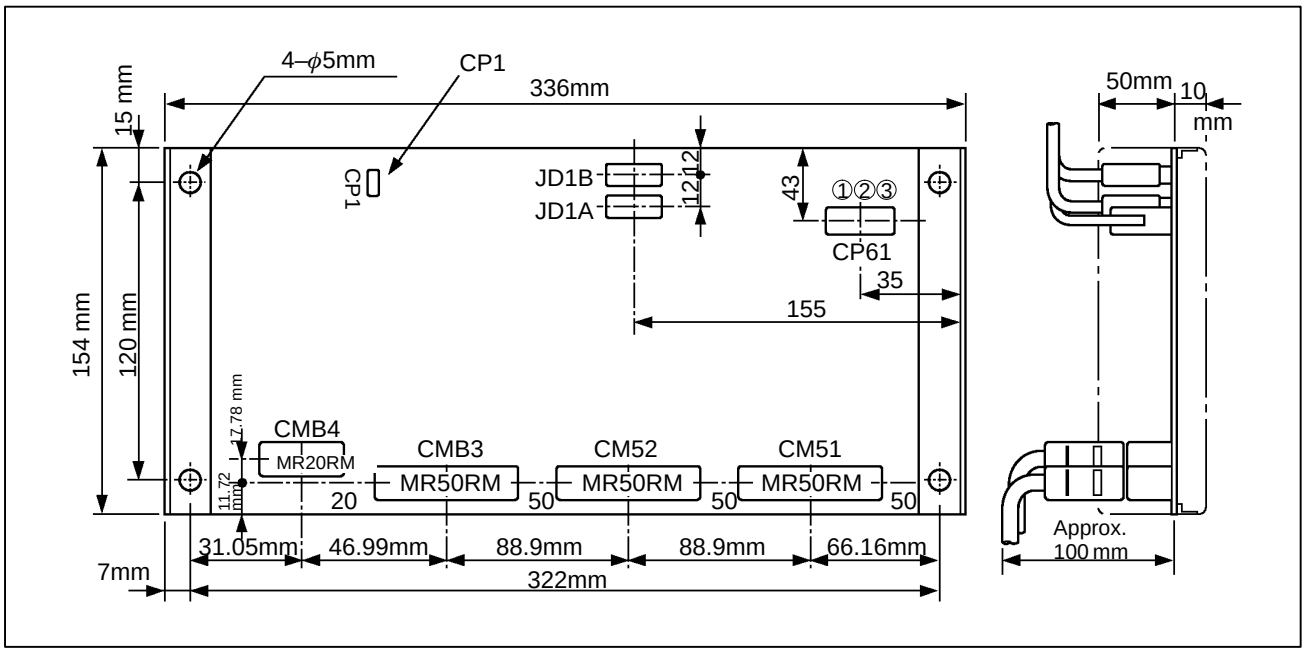

The following LEDs, fuses, variable resistors, and setting pins are mounted on the PCB:

[LEDs]

DB1 (green, pilot) : Lights while the power to the PCB is on.
DB2 (red, alarm) : Lights if an error occurs in the PCB or CNC.
DAL1 to DAL8 : See Subsec. 9.7.2

[Variable resistors]

VR1 and VR2 : Factory–set by FANUC. The machine tool builder need not adjust these resistors.

[Setting pin]

CP1 : Used to specify whether the CNC will be notified of a DO signal error as a system alarm (see Subsec. 9.7.2).

9.8 CONNECTING THE FANUC SERVO UNIT β SERIES WITH I/O Link

9.8.1 Overview

The FANUC servo unit β series with I/O Link (called the β amplifier with I/O Link) is a power motion control servo unit that can be easily connected to a CNC control unit via the FANUC I/O Link.
The β amplifier with I/O Link can be connected to the Series 0*i* using the FANUC I/O Link.
For the Series 0*i* Mate, however, only one β amplifier with I/O Link can be connected.

9.8.2 Connection

The β amplifier with I/O Link is connected to the Series 0*i* using the usual FANUC I/O Link connection.

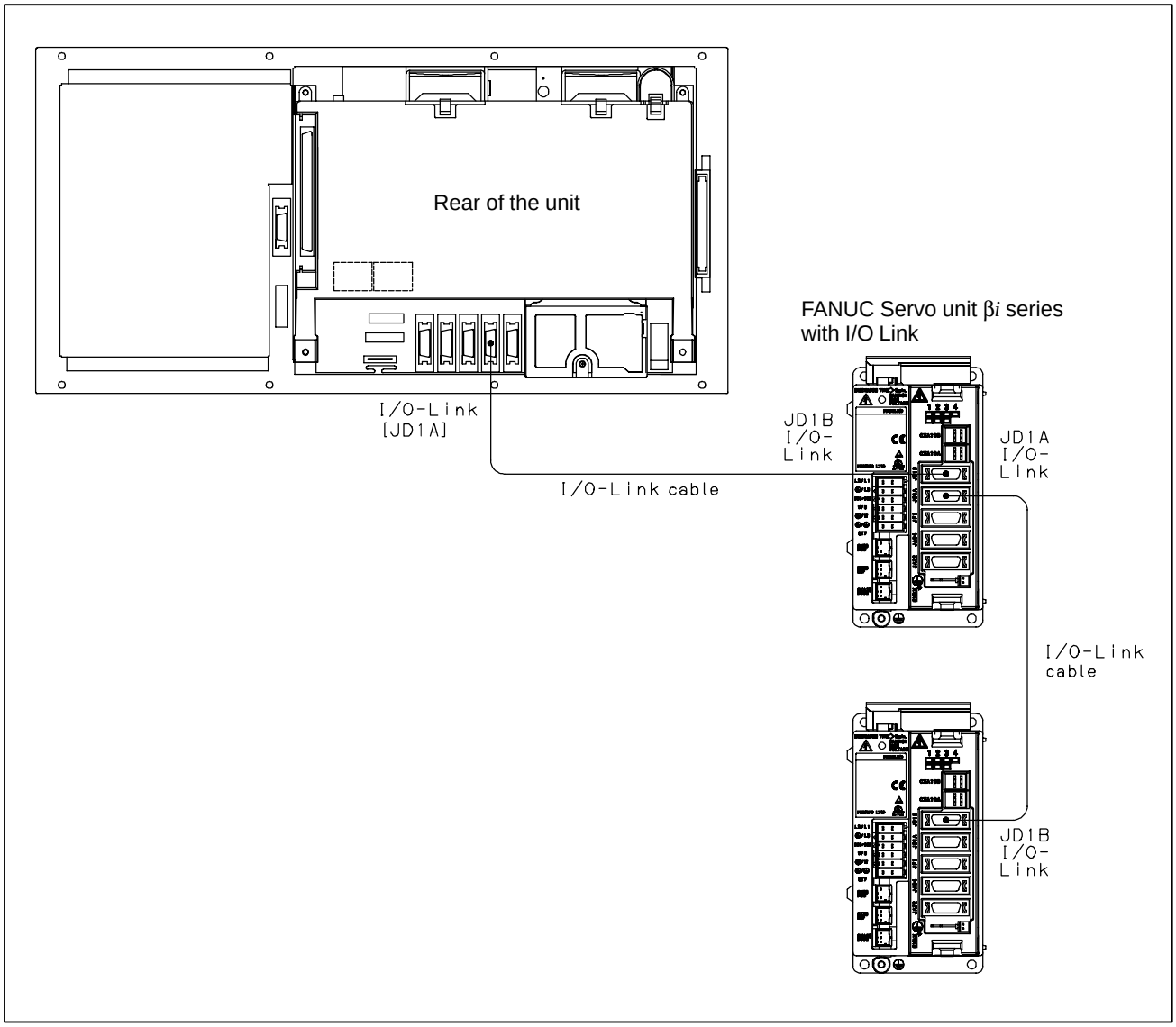

9.8.3 Maximum Number of Units that can be Connected

The maximum number of β amplifiers with I/O Link that can be connected to a control unit depends on the maximum number of FANUC I/O Link points provided by that control unit, as well as their assignments. For the Series 0*i*, the maximum number of FANUC I/O Link DI and DO points are 1024 and 1024, respectively. One β amplifier with I/O Link occupies 128 DI/DO points in the FANUC I/O Link. If no units other than the β amplifiers with I/O Link are connected to the control unit, up to eight β amplifiers can be connected.

9.8.4 Address Assignment by Ladder

If the β amplifier with I/O Link is used as an I/O Link slave, I/O addresses are assigned in the PMC in the CNC. Because data output from the slave is made in 16–byte units, the number of input/output points must be set to 128.

The module names are PM16I (input) and PM16O (output).
The BASE is always 0, and the SLOT is 1.

10 EMERGENCY STOP SIGNAL

WARNING

Using the emergency stop signal effectively enables the design of safe machine tools. See ”Cautions for configuring emergency stop circuit in compliance with safety standards.”

The emergency stop signal is provided to bring a machine tool to an emergency stop. It is input to the CNC controller, servo amplifier, and spindle amplifier. An emergency stop signal is usually generated by closing the B contact of a pushbutton switch.

When the emergency stop signal (*ESP) contact is closed, the CNC controller enters the emergency stop released state, such that the servo and spindle motors can be controlled and operated.

When the emergency stop signal (*ESP) contact opens, the CNC controller is reset and enters the emergency stop state, and the servo and spindle motors are decelerated to a stop.

Shutting off the servo amplifier power causes a dynamic brake to be applied to the servo motor. Even when a dynamic brake is applied, however, a servo motor attached to a vertical axis can move under the force of gravity. To overcome this problem, use a servo motor with a brake.

While the spindle motor is running, shutting off the motor–driving power to the spindle amplifier allows the spindle motor to continue running under its own inertia, which is quite dangerous. When the emergency stop signal (*ESP) contact opens, it is necessary to confirm that the spindle motor has been decelerated to a stop, before the spindle motor power is shut off.

The FANUC servo amplifier αi series products are designed to satisfy the above requirements. The emergency stop signal should be input to the power supply module (called the PSM). The PSM outputs a motor power MCC control signal, which can be used to switch the power applied to the power supply module on and off.

The CNC controller is designed to detect overtravel by using a software limit function. Normally, no hardware limit switch is required to detect overtravel. If the machine goes beyond a software limit because of a servo feedback failure, however, it is necessary to provide a stroke end limit switch, connected so that the emergency stop signal can be used to stop the machine.

Fig. 10 shows an example showing how to use the emergency stop signal with this CNC controller and αi series servo amplifier.

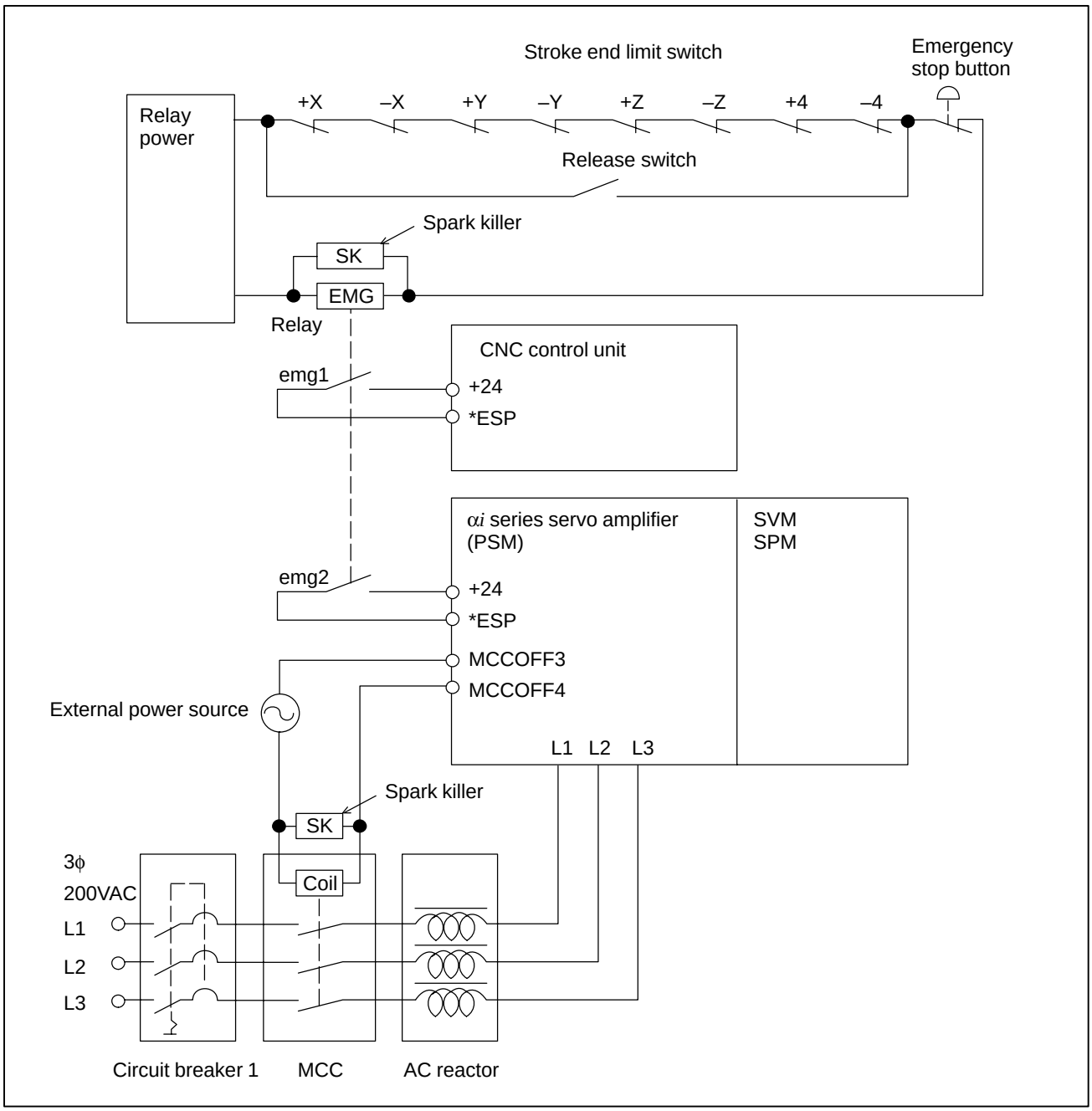

Fig. 10

WARNING

To use a spindle motor and amplifier produced by a manufacturer other than FANUC, refer to the corresponding documentation as well as this manual. Design the emergency stop sequence such that, if the emergency stop signal contact opens while the spindle motor is rotating, the spindle motor is decelerated until it stops.

Cautions for configuring an emergency stop circuit in compliance with safety standards

To configure an emergency stop circuit in compliance with JIS safety standards(*), observe the following cautions. Compliance with these JIS safety standards is a prerequisite for complying with the EC Machine Instructions.

The method for shutting off the motor power section in the amplifier is based on an IGBT (transistor) rather than an electromechanical scheme. When configuring an emergency stop circuit, therefore, install a line contactor on the power input line for motor power in the power supply module in order to ensure electromechanical shut–off, and apply voltage to the control coil of the contactor via the contactor control output of the power supply module.

A failure in the amplifier may disable the output relay of the power supply module from going off, thus preventing the line contactor from shutting off the power, even when the emergency stop command input (*ESP) of the amplifier becomes low.

To secure motor power shut–off, design the emergency stop circuit in a redundancy configuration. To be specific, the emergency stop circuit must have a direct line contactor shut–off route based on an emergency stop switch that is independent of the shut–off function of the amplifier.

If a spindle amplifier module is used, shutting off the motor power line during spindle rotation disables the spindle from stopping quickly because the power regenerative function does not work, allowing the spindle to coast. So, provide the redundancy circuit mentioned above with a delay function based on an off–delay timer that allows a usual stop time.

Refer to the following material for detailed descriptions about cautions related to safety circuits.

A–71429–S13J: About Requirements for Safety Circuits and Configuration Samples

To get a copy of this material, contact your FANUC sales representative.

NOTE

Examples of important safety standards. Enclosed in parentheses are corresponding European standards.

JIS/TR B 008 and 009	(EN292–1/2)	General matter related to machine safety
JIS B 9960–1	(EN60204–1)	Stop categories
JIS B 9705–1:2000	(EN954–1)	Safety categories
JIS B 9703:2000	(EN418)	Emergency stop

11 HIGH–SPEED SERIAL BUS (HSSB)

11.1 OVERVIEW

The high–speed serial bus (HSSB) enables the high–speed transfer of large amounts of data between a commercially available IBM PC or compatible personal computer and a CNC, by connecting them via a high–speed optical fiber.
On the CNC, the HSSB interface board is installed in an option slot. On the personal computer, an appropriate interface board is installed.
You can use the FANUC PANEL *i* instead of a commercial PC. The FANUC PANEL *i* comes standard with the HSSB interface.

11.2 CAUTIONS

The use of the HSSB requires an IBM PC/AT compatible computer or FANUC intelligent terminal. The machine tool builder or end user is required to procure and maintain the personal computer.
To enable the use of the HSSB, Windows 2000 must have been installed on the personal computer.
FANUC owns the copyright for the HSSB device driver.
The software mentioned above and the contents of the related manuals may not be used or reproduced in part or whole without the prior written permission of FANUC.

NOTE
1 IBM is a registered trademark of IBM Corp. of the US.
2 Windows 2000 are registered trademarks of Microsoft Corp. of the US.
3 The company and product names mentioned in this manual are trademarks or registered trademarks of the respective companies.

11.3 CONNECTION DIAGRAM

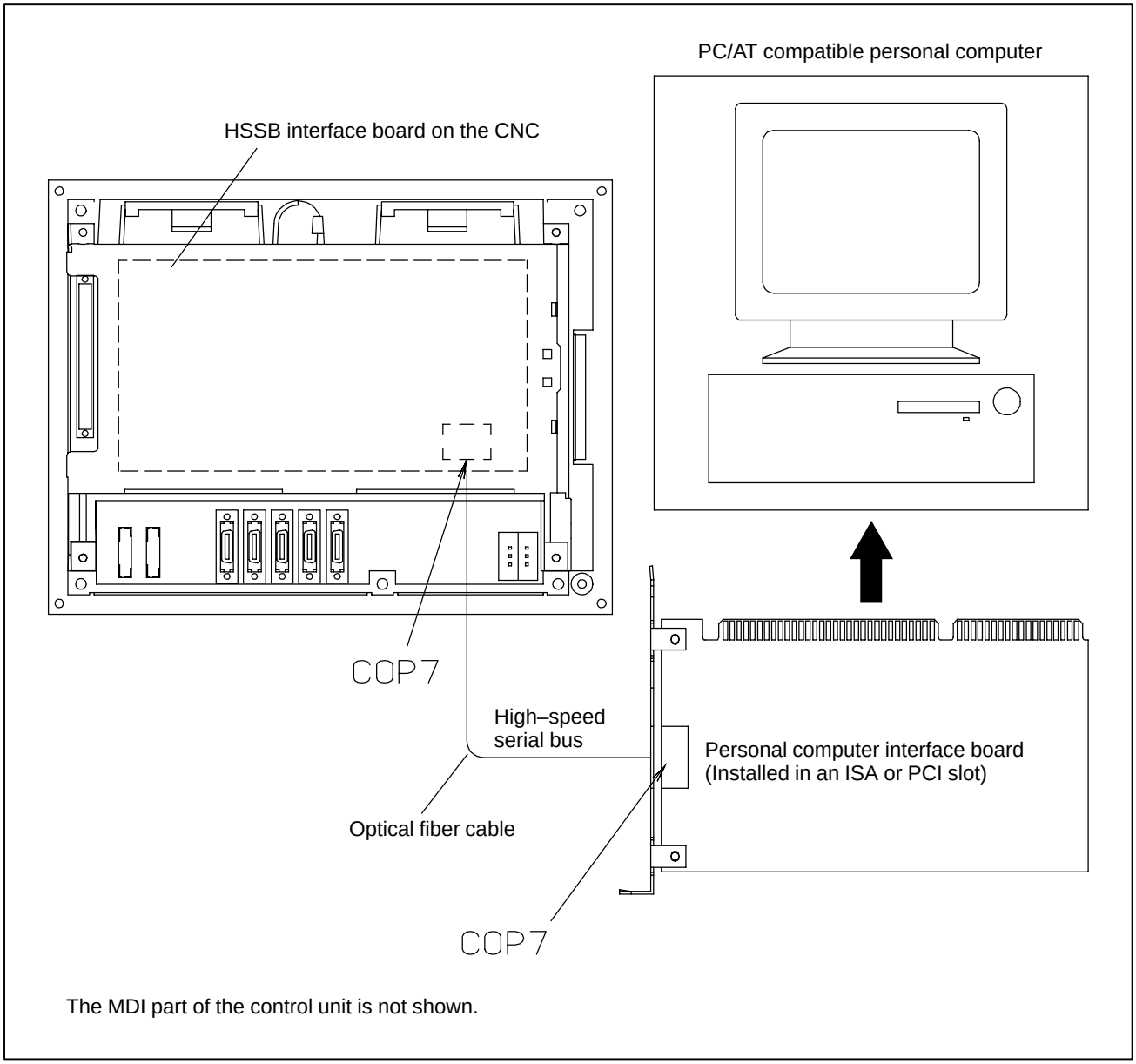

The PC interface boards include an ISA bus interface board and a PCI bus interface board.

11.4 PERSONAL COMPUTER SPECIFICATION

CAUTION
1 The machine tool builder or end user is required to procure and maintain the personal computer.
2 FANUC is not liable for any problems resulting from the operation of users' personal computers, regardless of whether the operations are normal or abnormal.

11.4.1 Specification of Personal Computer in Case that the Interface Board of ISA Type are Used

- This interface board for the personal computer is based on the ISA specifications and it can be used into IBM–PC/AT or full compatible computer. (CPU of the computer must be more than 486.)
- The HSSB interface board uses 16 bytes of I/O space defined with rotary switch as mentioned in "MAINTENANCE – Setting of Switched". The other ISA extension boards that use the same resource with HSSB board can not be used.
- Driver installation is required for using HSSB interface board. The driver for the HSSB interface board is included in "Open CNC Driver Libraries Disk (order specification is A02B–0207–K730).
- Please examine the connection test including the communication between the personal computer and CNC controller sufficiently.
- Following shows the required power of the interface board for ISA type.

1ch version	+5V, 1A
2ch version	+5V, 1.5A

11.4.2 Specification of Personal Computer in Case that the Interface Board of PCI Type are Used

- This interface board for the personal computer is based on the PCI specifications and it can be used into a computer with PCI slot (5V, ISA slot type).
- Driver installation is required for using HSSB interface board. The driver for the HSSB interface board is included in "Open CNC Driver Libraries Disk (order specification is A02B–0207–K730). The revision of the driver must be Edition 1.6 or later for the board of PCI type.
- Please examine the connection test including the communication between the personal computer and CNC controller sufficiently.
- Following shows the required power of the interface board for PCI type.

1ch version	+5V, 0.8A
2ch version	+5V, 1.0A

11.5 INSTALLATION ENVIRONMENT

(1) HSSB Interface Board For Personal Computer

Ambient Temperature	Operating	: 0 to 55°C
	Non–operating	: –20 to 60°C
Humidity	Usual :	: 10 to 75% (non–condensing)
	Short–term (within one month)	: 10 to 95% (non–condensing)

If the environmental requirement of the using personal computer is different from the above, please keep the environmental requirement to be satisfied by the both equipments.

(2) HSSB Interface Board For CNC

Please strictly keep environmental requirement about each CNC controller in which the interface boards are installed.

11.6 PROCEDURE FOR INSTALLING PERSONAL COMPUTER INTERFACE BOARDS

WARNING

Before starting to mount or remove a personal computer interface board, switch off the personal computer and its peripheral devices, and disconnect their power supply cables. Otherwise, there is a serious danger of electric shock.

(1) Remove the covering plate of ISA extension slot on the personal computer.

(2) Set the I/O base address of the interface board (in only case of ISA type).

Before mounting the interface board of ISA type, set the I/O address not to conflict with the I/O address areas that are used by the personal computer and other ISA extension boards. Set the I/O address not to conflict with each other in case that two or more interface boards for the personal computer are used (HSSB multi–connection).

The interface board of PCI type is setting free.

(3) Insert the interface board for the personal computer to the ISA connector tightly.

(4) Screw the plate of interface board to the computer.

(5) Confirm connection (in only case of HSSB multi–connection)

Confirm following items for installing drivers of HSSB interface board in case of HSSB multi–connection.

- In case of ISA type

  I/O port address set to HSSB channel

  Correspondence between HSSB channel and CNC
- In case of PCI type

  PCI slot number which HSSB board is mounted (slot number is marked to PCB normally).

  Correspondence between HSSB channel and CNC

(6) Restore the covering plate.

NOTE

Do not touch the leads running to the card edge of the interface board (that match with connectors).

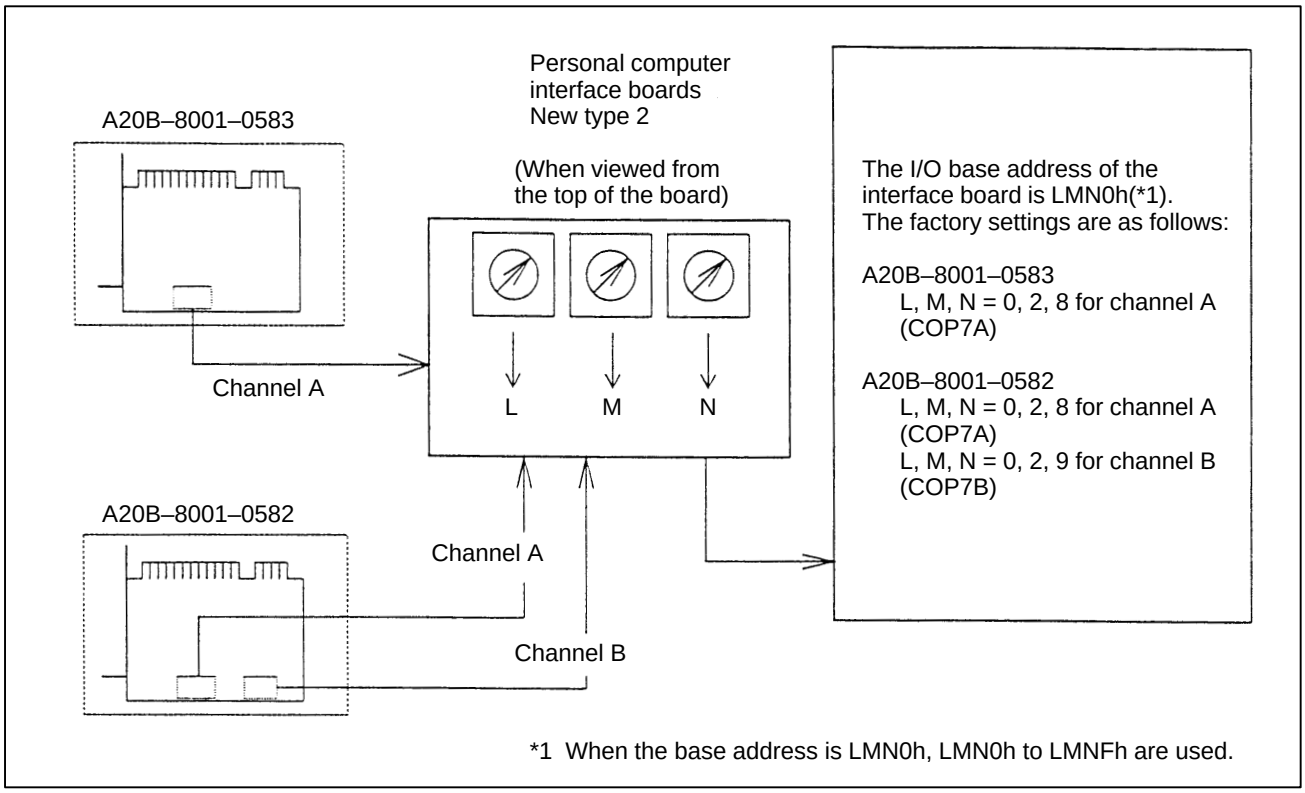

Fig. 11.6 I/O base address setting (for personal computer interface board of new type 2 (A20–B–8100–0582, –0583))

11.7 HANDLING PRECAUTIONS

(1) Personal computer interface board

(A) Electrostatic interference

The personal computer interface board is shipped in an anti–static bag. To store or transport the interface board, always place it in the anti–static bag. Before removing the interface board from the anti–static bag, ground your body.

(B) Protection of card edge terminals

When handling the personal computer interface board, do NOT touch its card edge terminals (the gold–plated contacts which engage with a mating connector). If you accidentally touch any card edge terminal, wipe it gently with clean or ethyl alcohol–dipped tissue paper or absorbent cotton. Do not use any organic solvent other than ethyl alcohol.

(2) Optical connector and fiber cable

See Appendix D.

11.8 RECOMMENDED CABLES

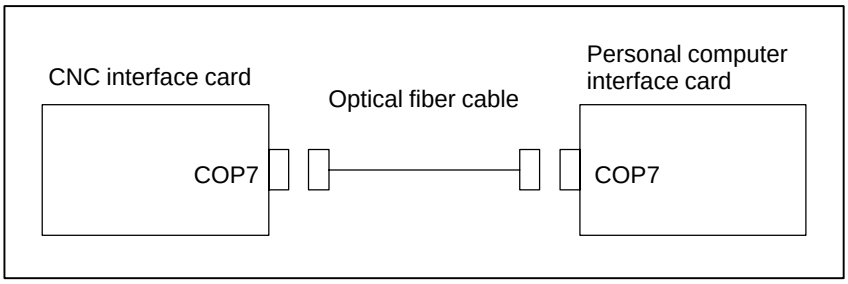

Compatible cables (optical fiber cables, used for interconnections)
A66L–6001–0026#L_

See descriptions about standard cable lengths in Appendix D for explanations about how to specify the length of the underscored portion and the related cautions.

NOTE

An optical fiber cable of up to 100 m can be used only when the NC side interface board A02B–0281–J202 (printed circuit board drawing number: A20B–8001–0641) is used with the personal computer interface board (A20B–8001 –0582, –0583 –960 or –0961).

12 FANUC DNC2 INTERFACE

12.1 GENERAL

FANUC DNC2 is a communication protocol that provides an RS–232–C interface between the CNC and a personal computer (PC). This interface enables the CNC and PC to exchange data with each other. The hardware used to connect the CNC and PC is the same as that used for remote buffer connection.

For information about the specifications and other details of FANUC DNC2, refer to “FANUC DNC2 Description (B–61992E).”

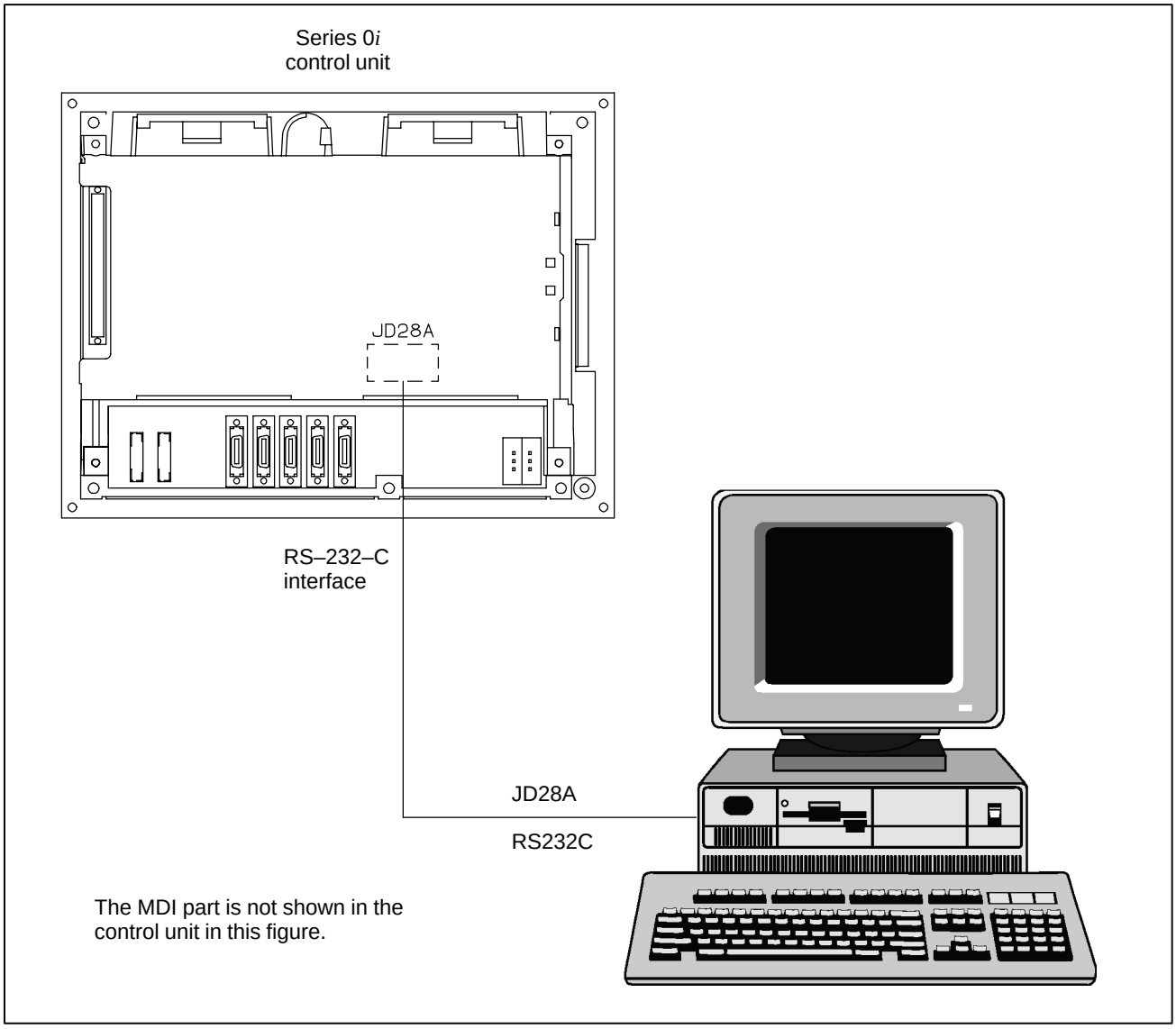

12.2 DNC2 INTERFACE (RS–232–C)

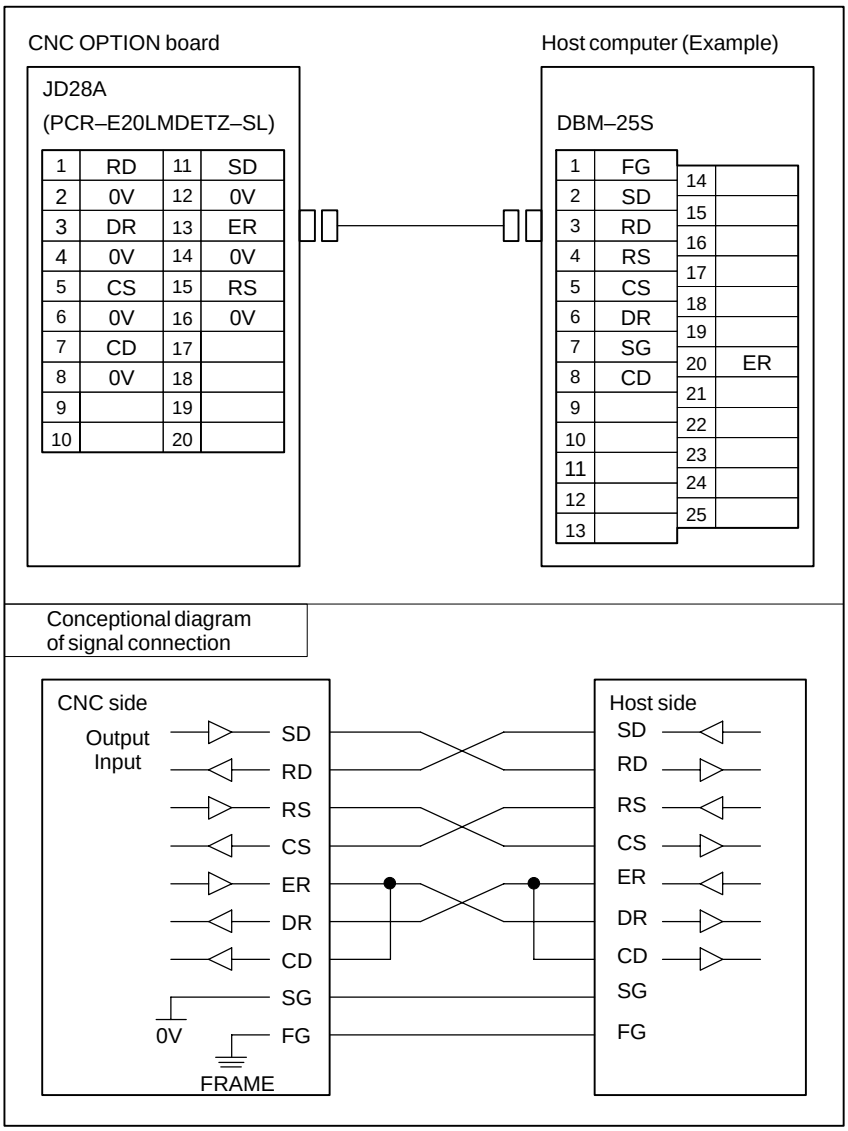

Connect CS to RS when CS is not used.

Connect DR to ER when DR is not used.

Always connect CD to ER.

NOTE

When an IBM PC/AT is used, the RS signal goes low in the reception phase. In this case, connect CS on the host side to ER on the same side.

13 CONNECTION TO OTHER NETWORKS

The Series 0*i*–C can be connected to the following networks. For an explanation of how to make the connection, refer to the manuals listed below:

Manual title	Manual code
FANUC Data Server Operator's Manual	B–62694EN
FANUC Ethernet Board Operator's Manual	B–63354EN
FANUC Profibus–DP Board Operator's Manual	B–62924EN
FANUC DeviceNet Board Operator's Manual	B–63404EN

APPENDIX

A EXTERNAL DIMENSIONS OF EACH UNIT

Name			Specification	Fig., No.
CNC control unit (7.2″/8.4″ LCD, MDI horizontal type)				Fig. U1
CNC control unit (7.2″/8.4″ LCD, MDI vertical type)				Fig. U2
I/O unit for 0*i*			A02B–0309–C001	Fig. U5
HSSB interface board type 2 (1CH) on the personal computer side (ISA)			A20B–8001–0583	Fig. U16(a)
HSSB interface board type 2 (2CH) on the personal computer side (ISA)			A20B–8001–0582	
HSSB interface board type 2 (1CH) on the personal computer side (PCI)			A20B–8001–0961	Fig. U16(b)
HSSB interface board type 2 (2CH) on the personal computer side (PCI)			A20B–8001–0960	
α position coder		10000min^{-1}	A860–0309–T302	Fig. U17
Manual pulse generator			A860–0203–T001	Fig. U18
Pendant type manual pulse generator			A860–0203–T004	Fig. U19
			A860–0203–T005	
			A860–0203–T007	
			A860–0203–T010	
			A860–0203–T012	
			A860–0203–T013	
Separate detector interface unit			A02B–0236–C205, C204	Fig. U20
Battery case for separate detector interface unit (ABS)			A06B–6050–K060	Fig. U21
CNC battery unit for external installation			A02B–0236–C281	Fig. U22
Punch panel	Narrow width type	Cable length : 1m	A02B–0120–C191	Fig. U24
		Cable length : 2m	A02B–0120–C192	
		Cable length : 5m	A02B–0120–C193	
Machine operator's panel	Main panel B		A02B–0236–C231	Fig. U25
	Sub panel A		A02B–0236–C232	Fig. U26
	Sub panel B1		A02B–0236–C235	Fig. U27

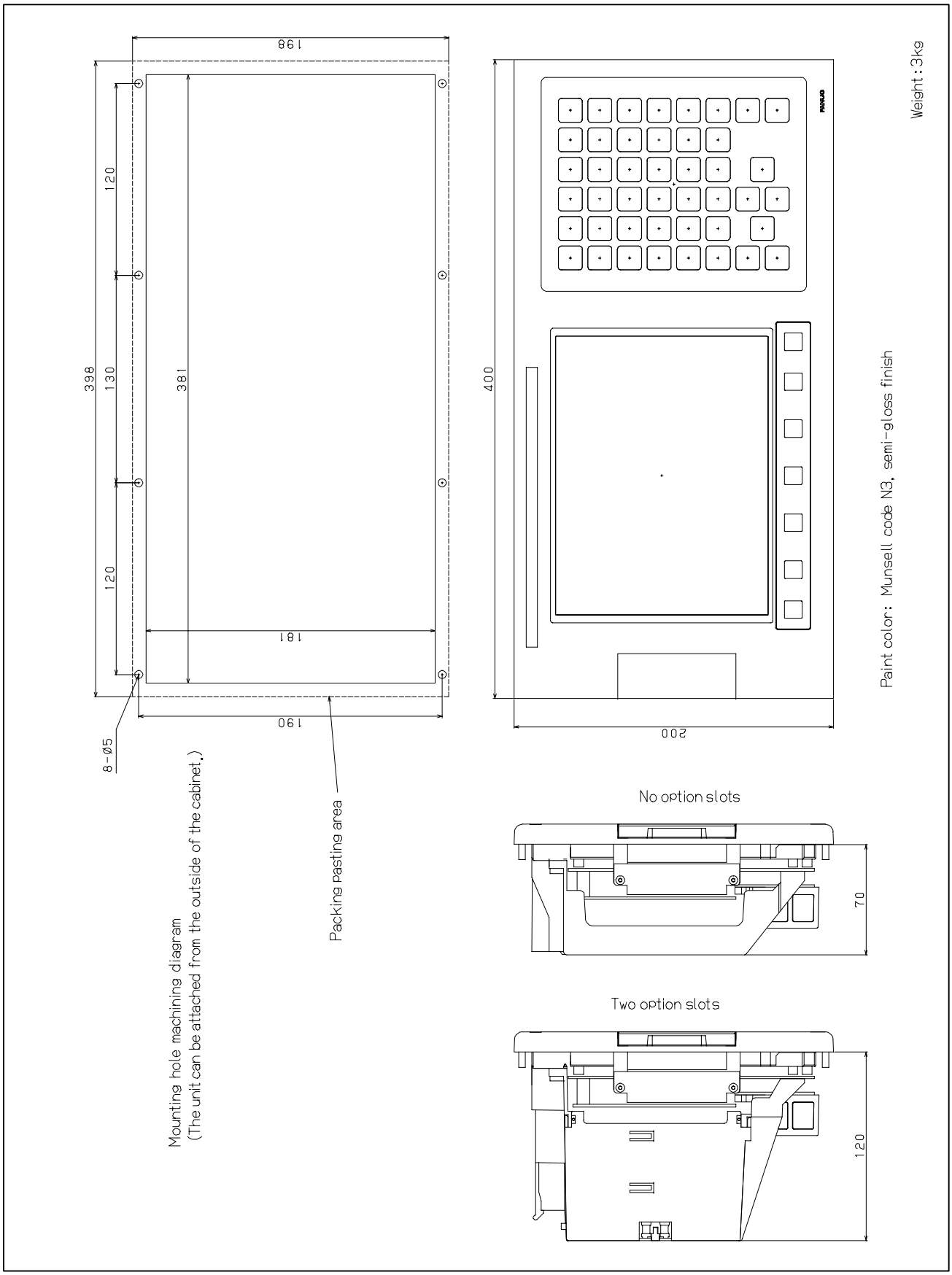

Fig.U1 CNC control unit (7.2″/8.4″ LCD, MDI horizontal type)

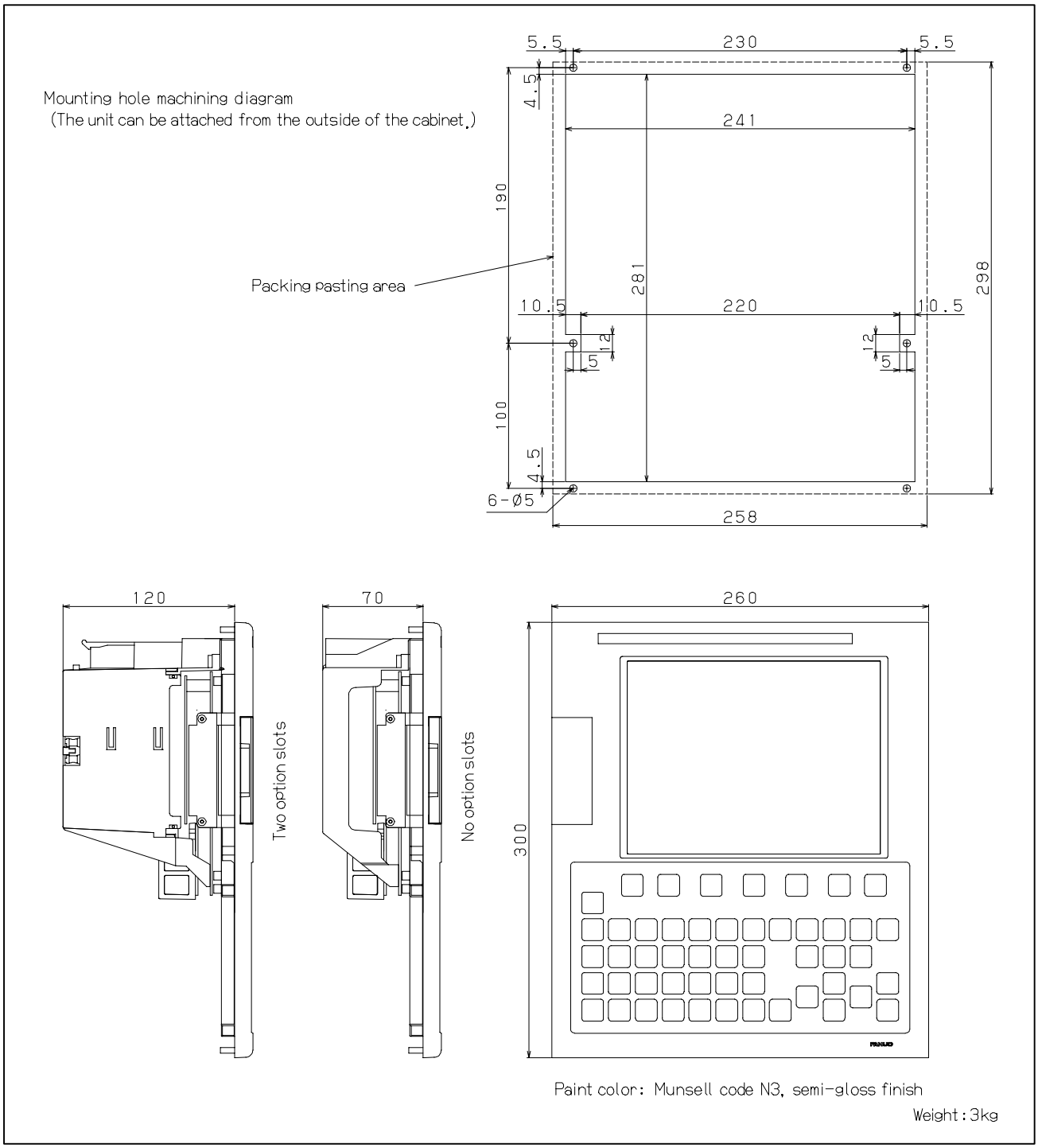

Fig.U2 CNC control unit (7.2″/8.4″ LCD, MDI vertical type)

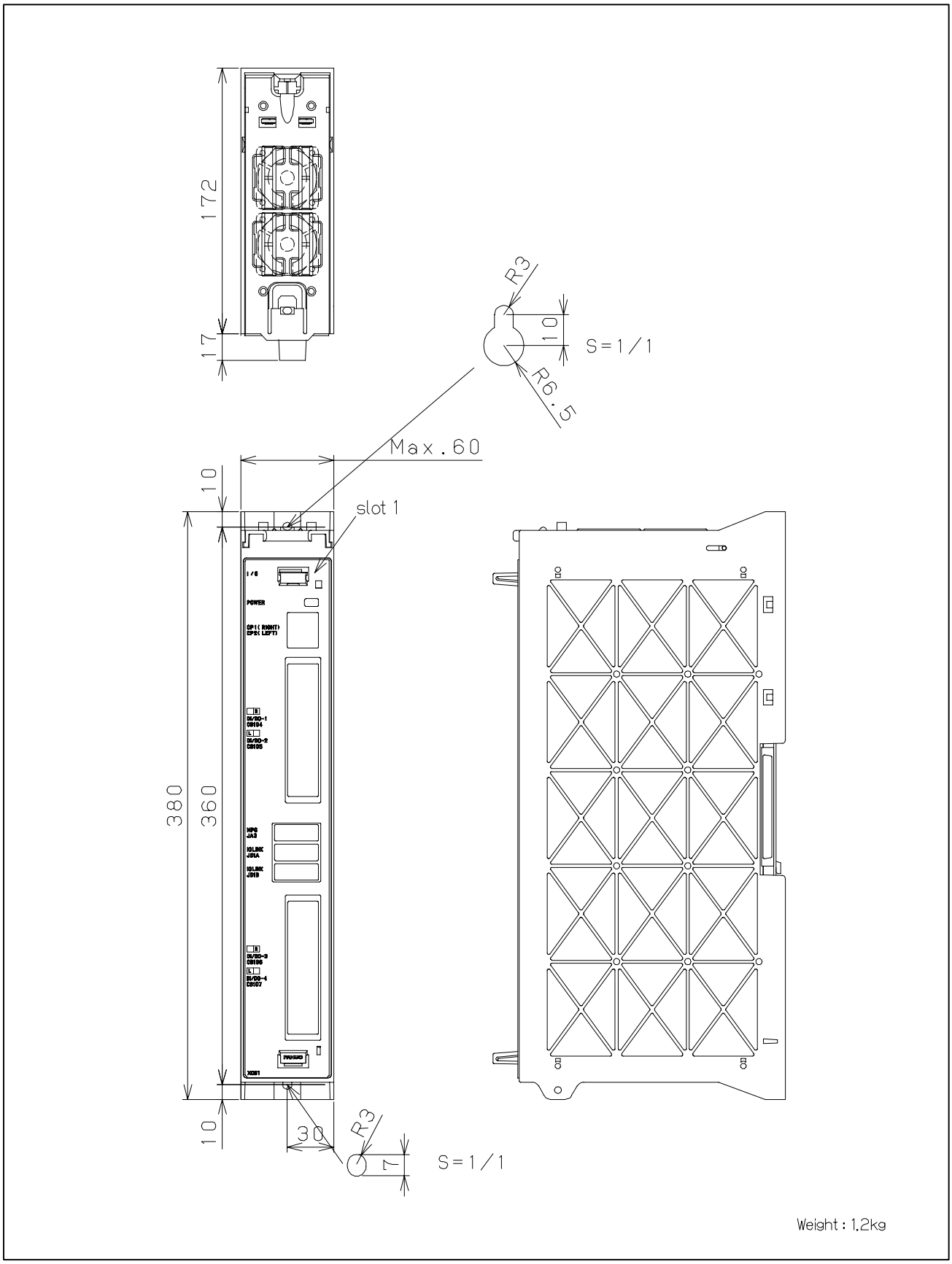

Fig.U5 I/O unit for 0*i*
Specification No. : A02B–0309–C001

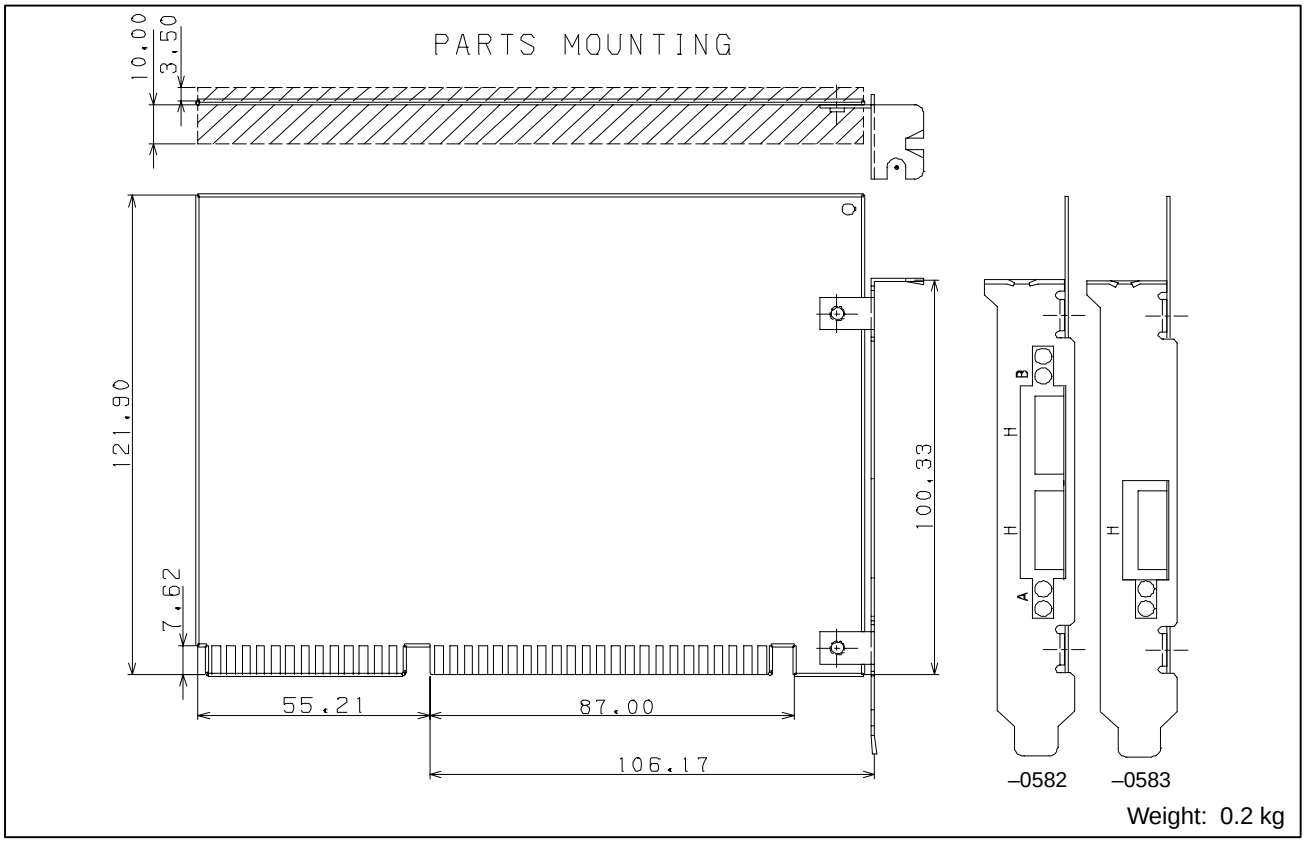

Fig.U16 (a) High–speed serial bus interface board type 2 (PC) (ISA bus version)
Specification No. : A20B–8001–0583 (1 CH)
A20B–8001–0582 (2 CH)

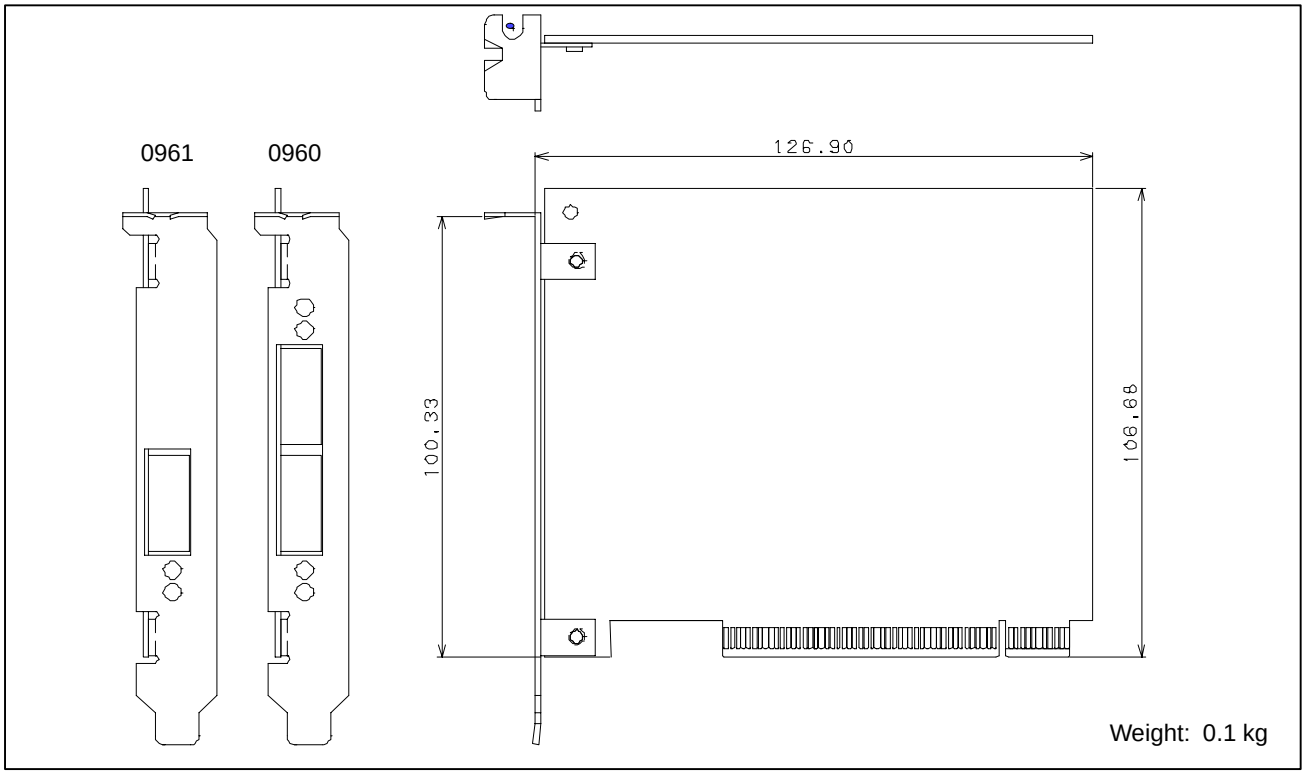

Fig.U16 (b) Interface Board for Personal Computer (PCI bus version)
Specification No. : A20B–8001–0960 (2 CH)
A20B–8001–0961 (1 CH)

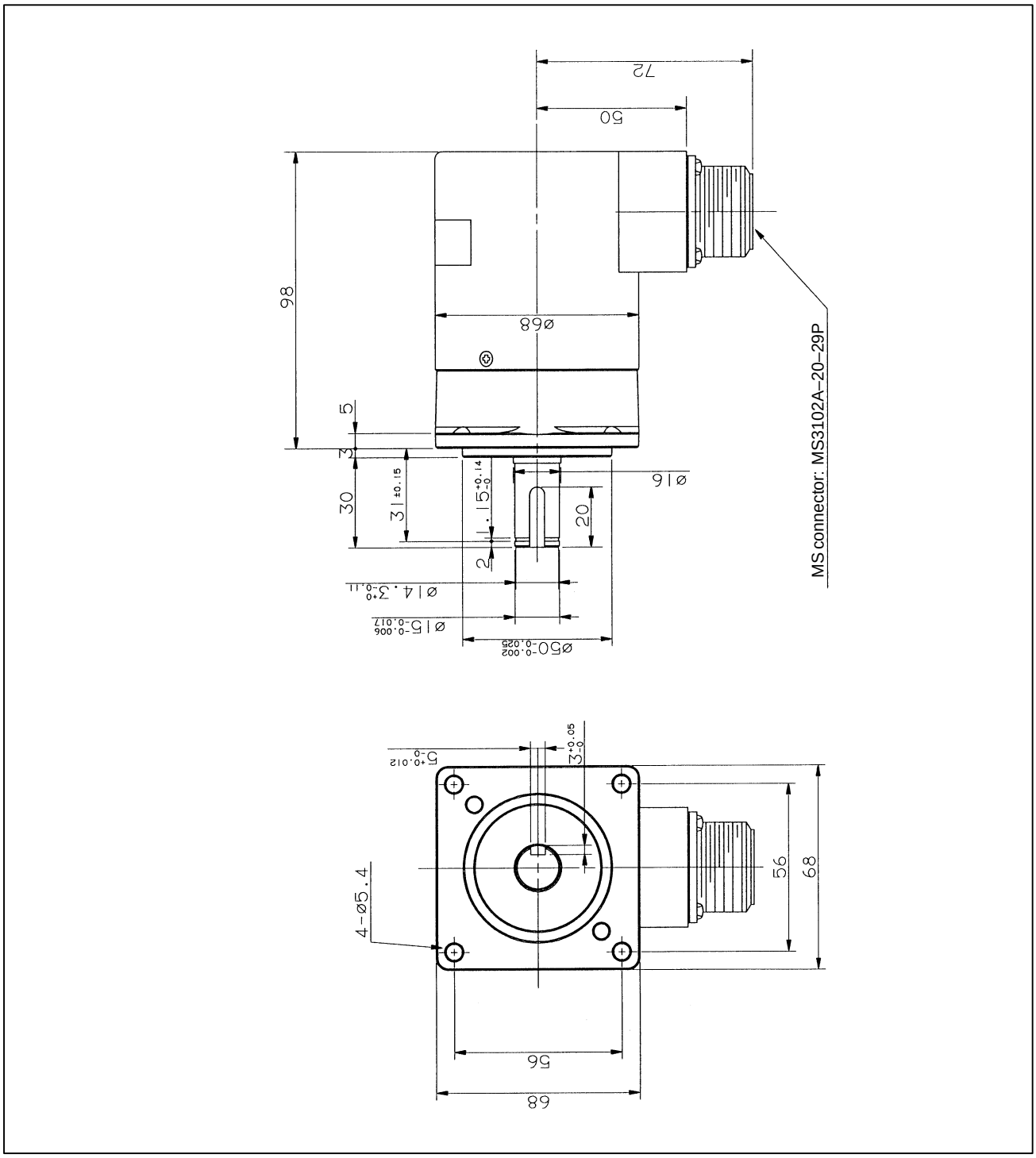

Fig.U17 α position coder
Specification No.: A860–0309–T302 (10000 min^{-1} maximum)

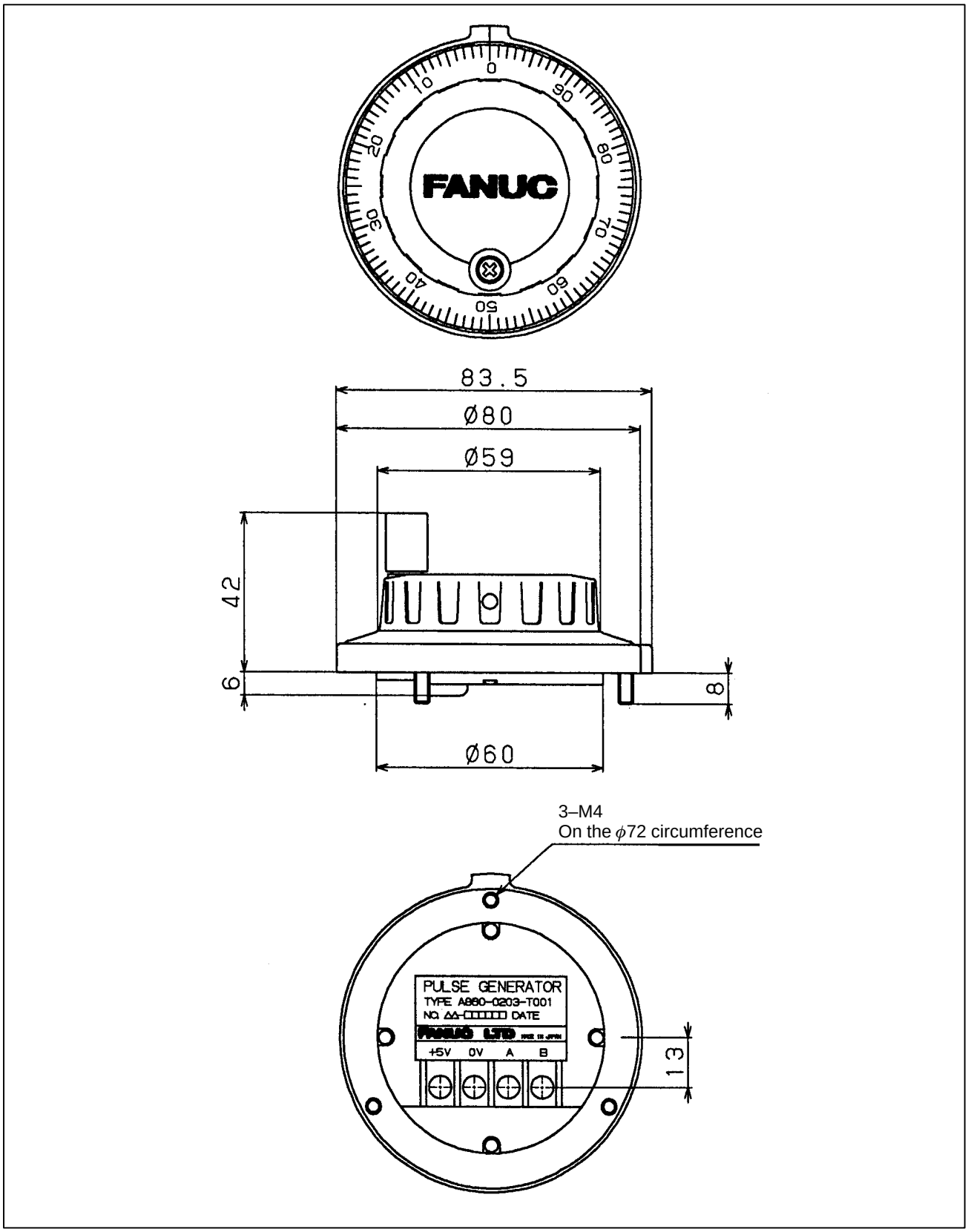

Fig. U24 External dimensions of manual pulse generator
Specification No.: A860–0203–T001

(1) A860–0203–T004 to T009

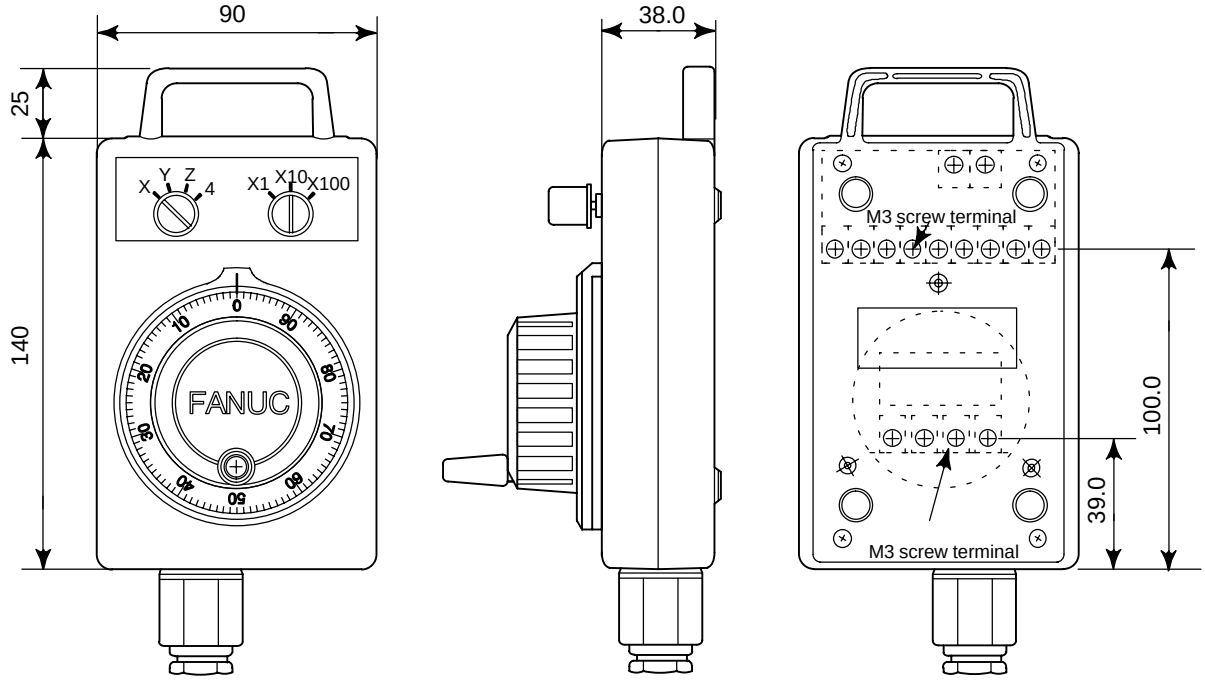

(2) A860–0203–T010 to T015

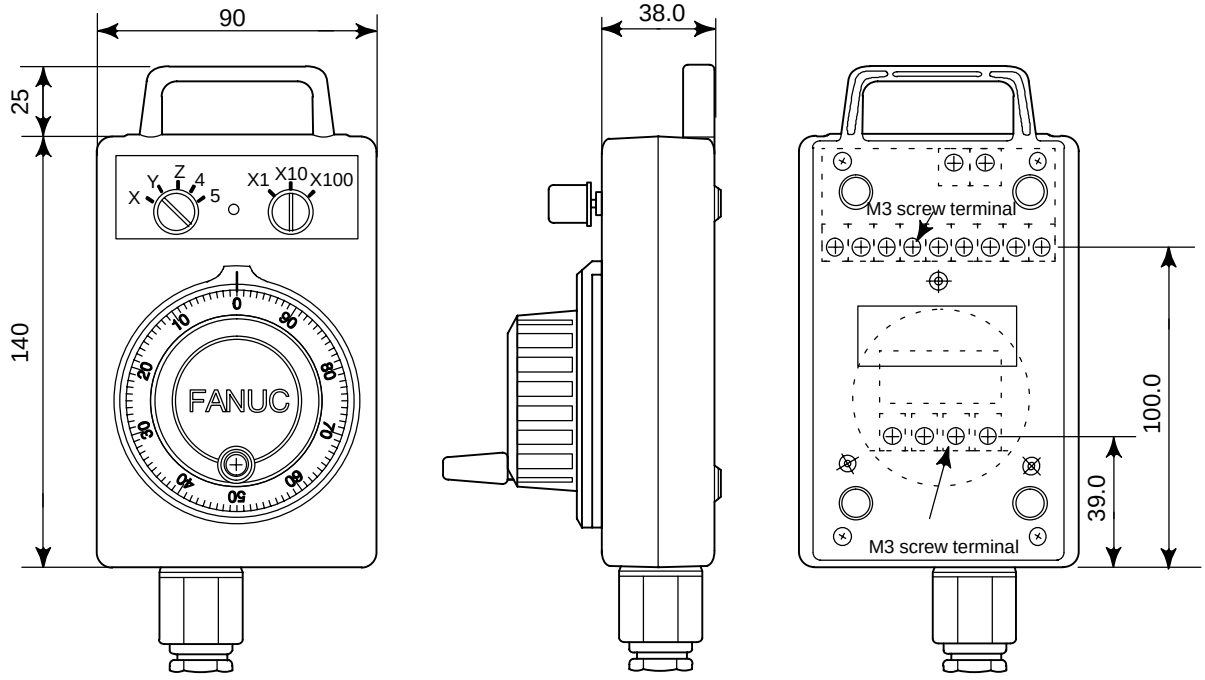

Fig.U19 Pendant type manual pulse generator
Specification No. : A860–0203–T004 to T015

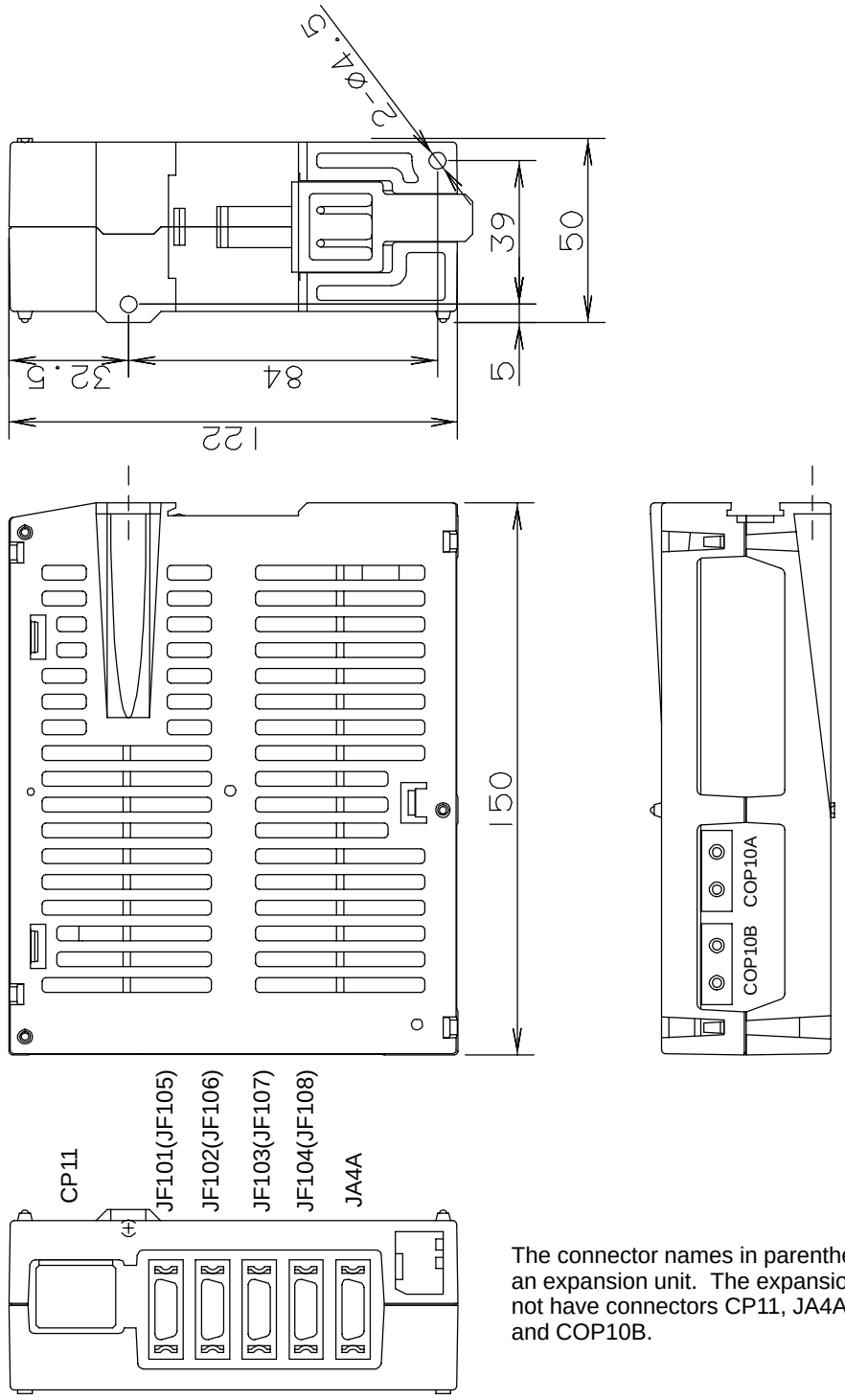

The connector names in parentheses are for an expansion unit. The expansion unit does not have connectors CP11, JA4A, COP10A, and COP10B.

Fig.U20 External dimensions of separate detector interface unit

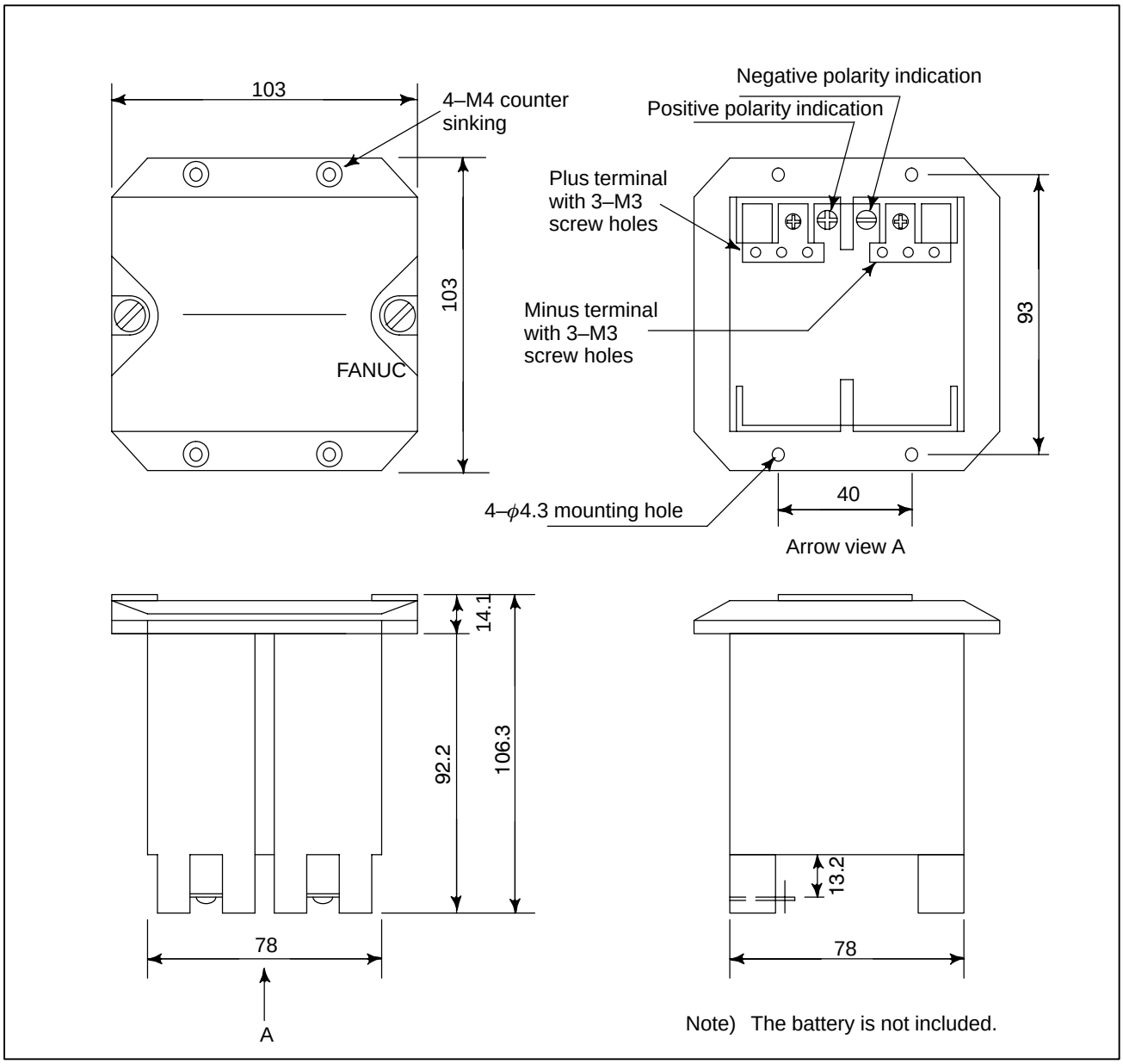

Fig.U21 External dimensions of ABS battery case for separate detector
Specification No. : A06B–6050–K060

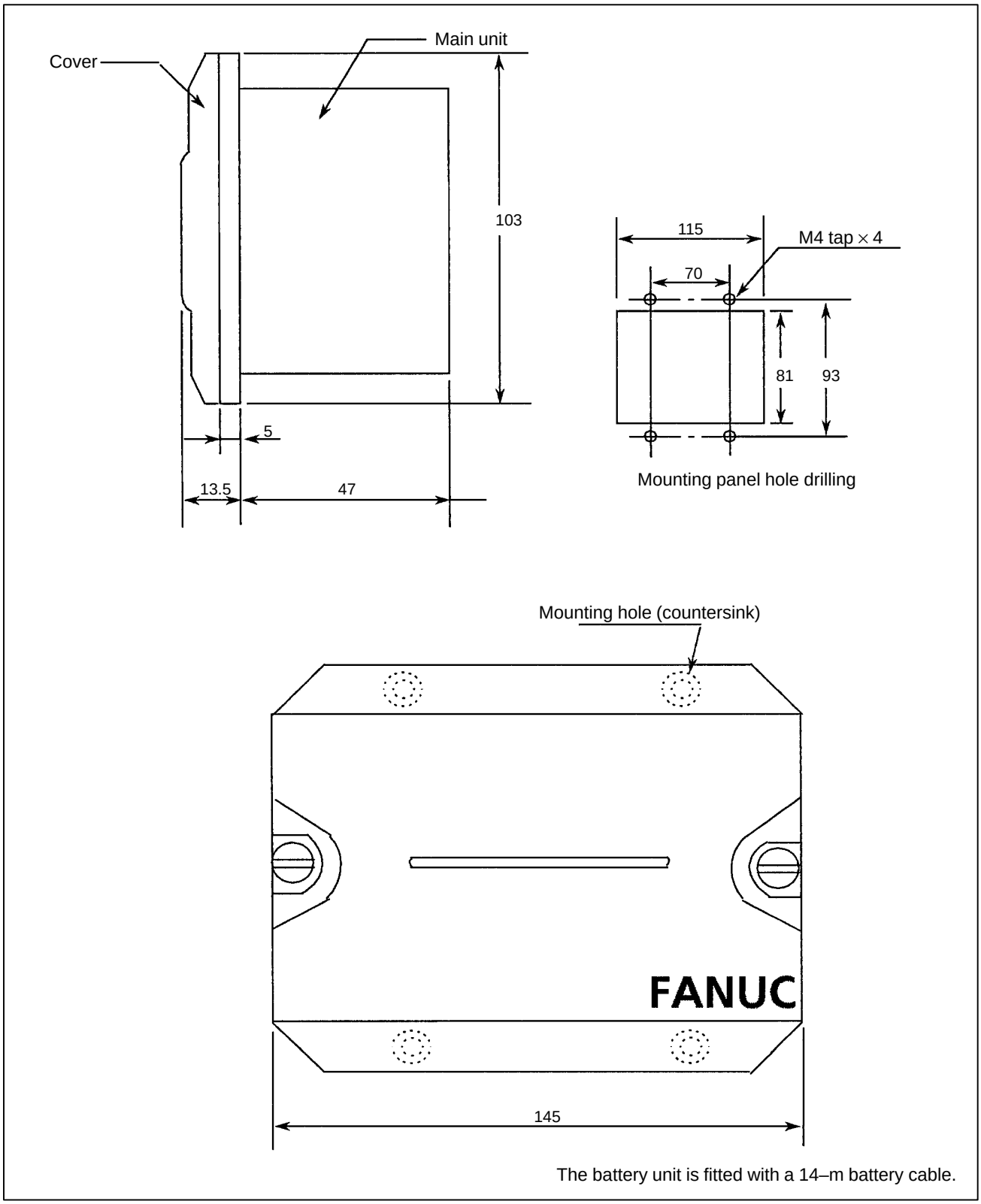

Fig. U22 External dimensions of external CNC battery unit

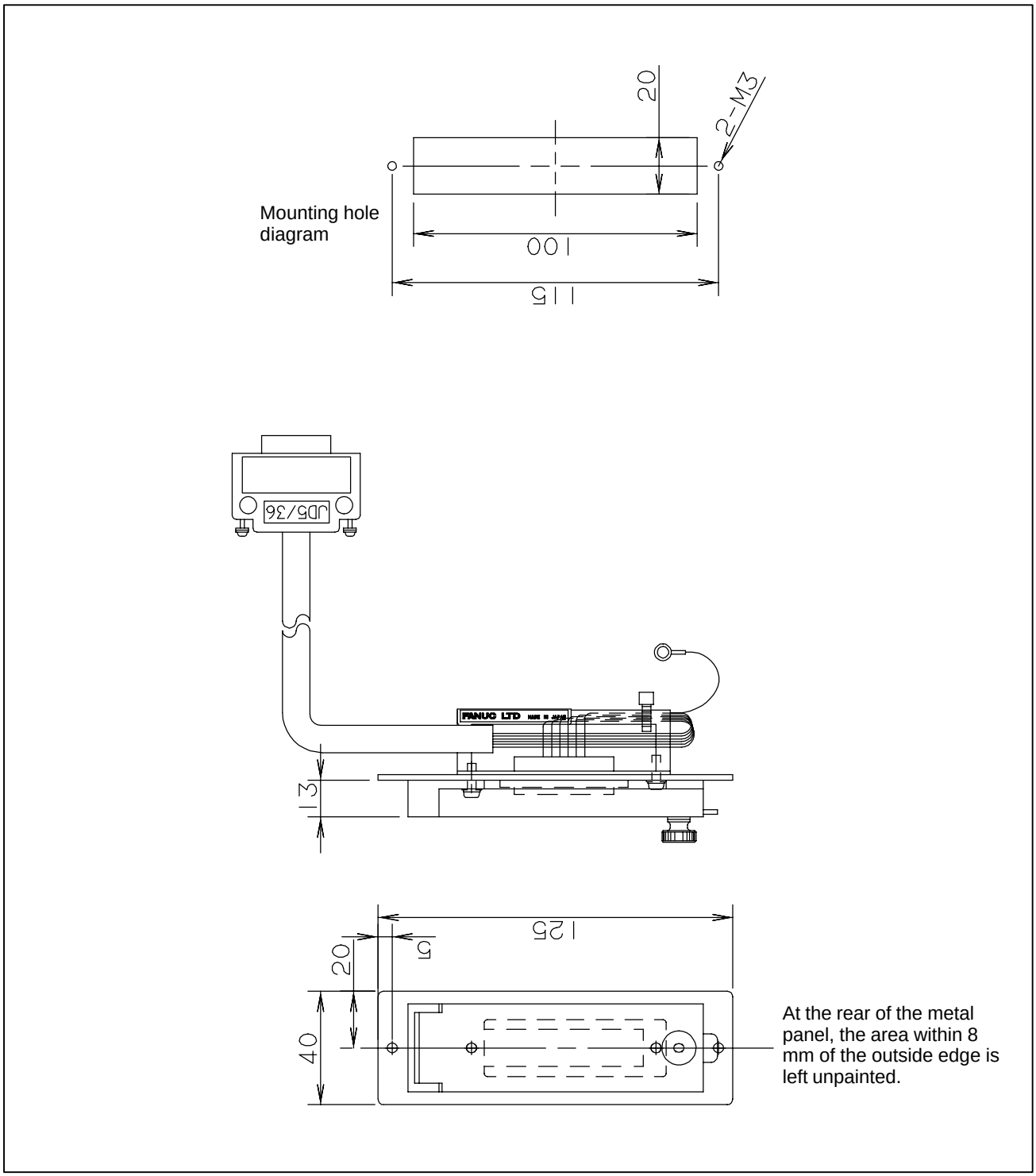

Fig. U24 External dimensions of punch panel (narrow type)

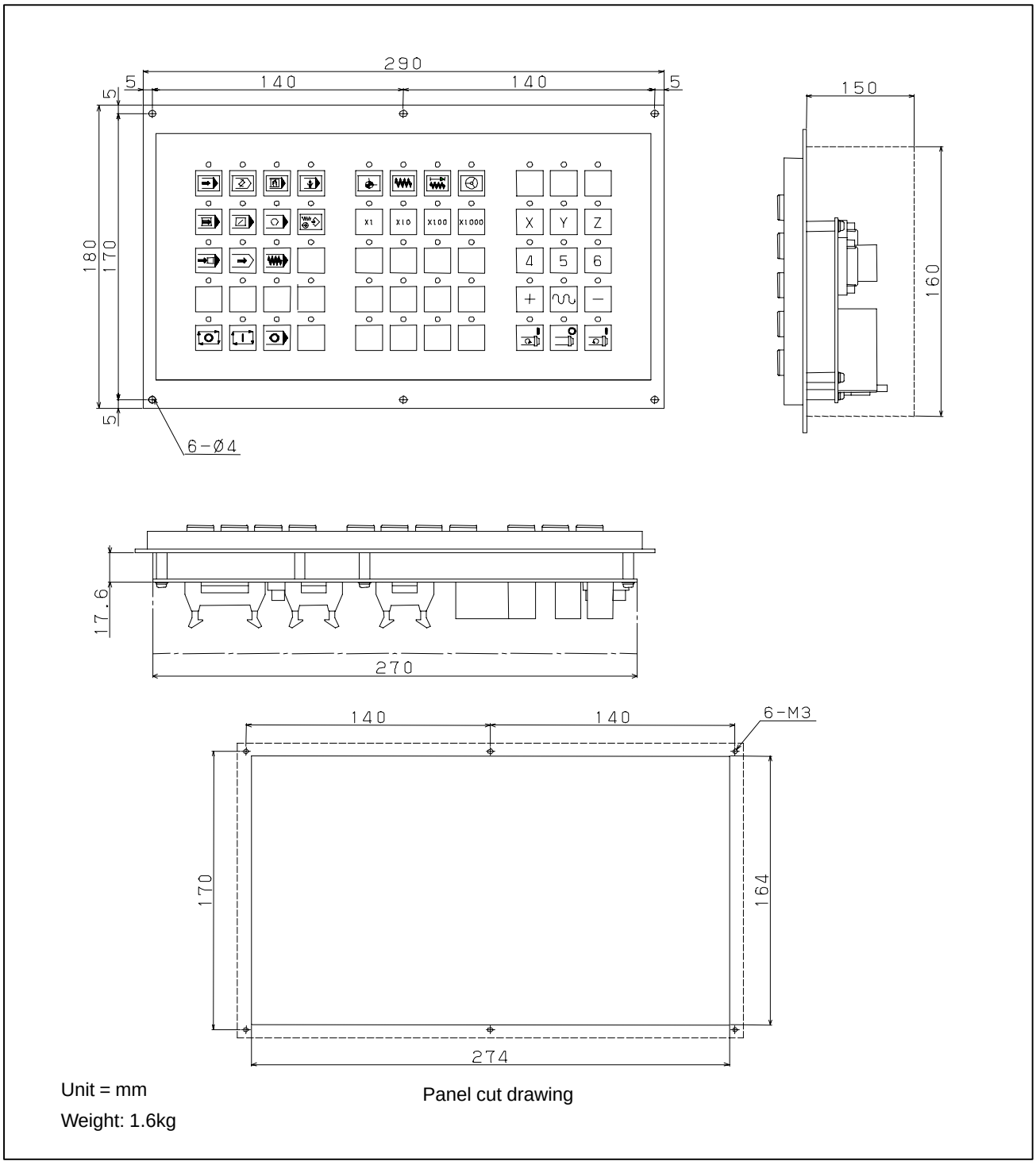

Fig.U25 Machine operator's panel (Main panel B)
Specification No. : A02B–0236–C231

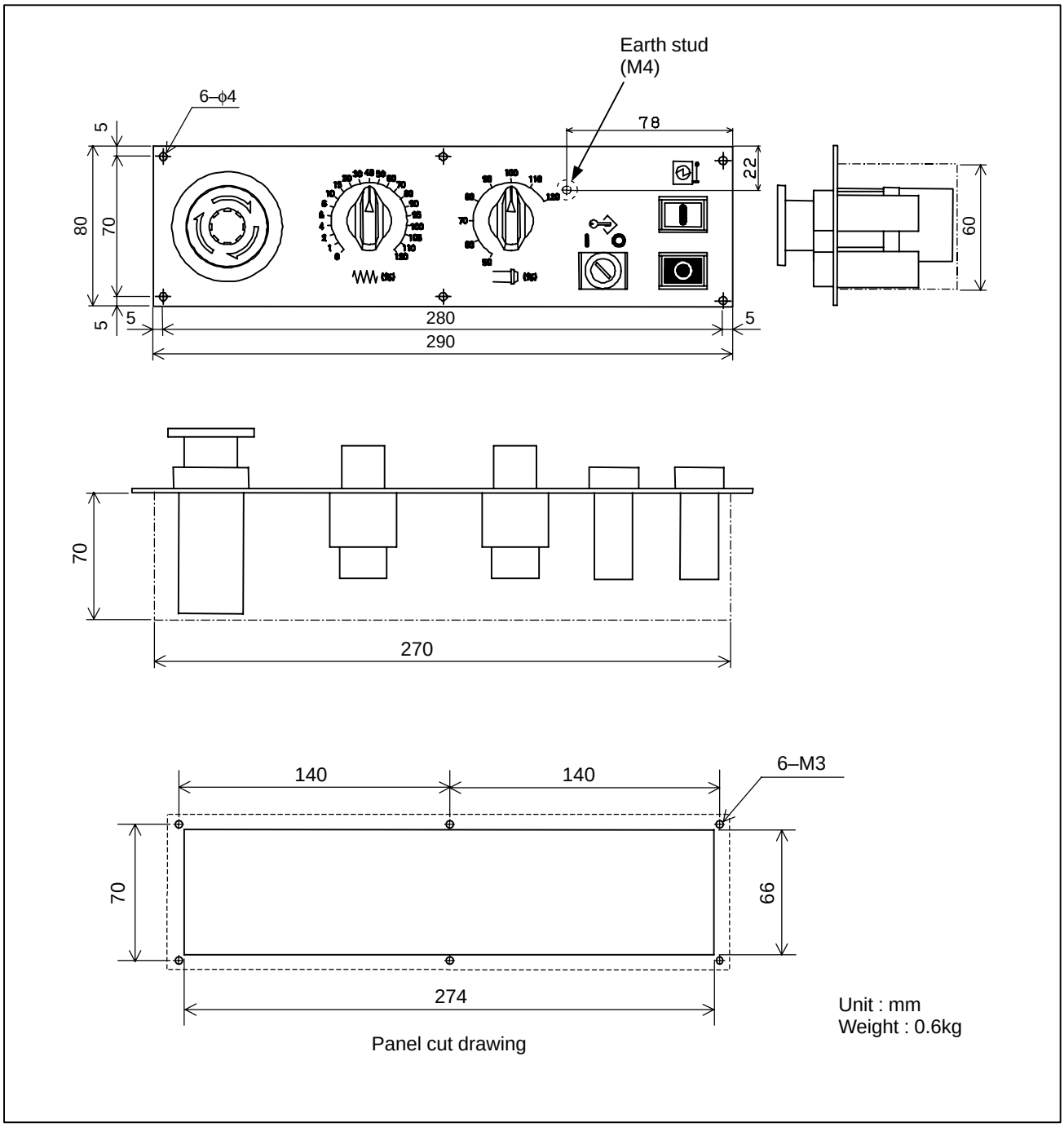

Fig.U26 Machine operator's panel (Sub panel A)
Specification No. : A02B–0236–C232

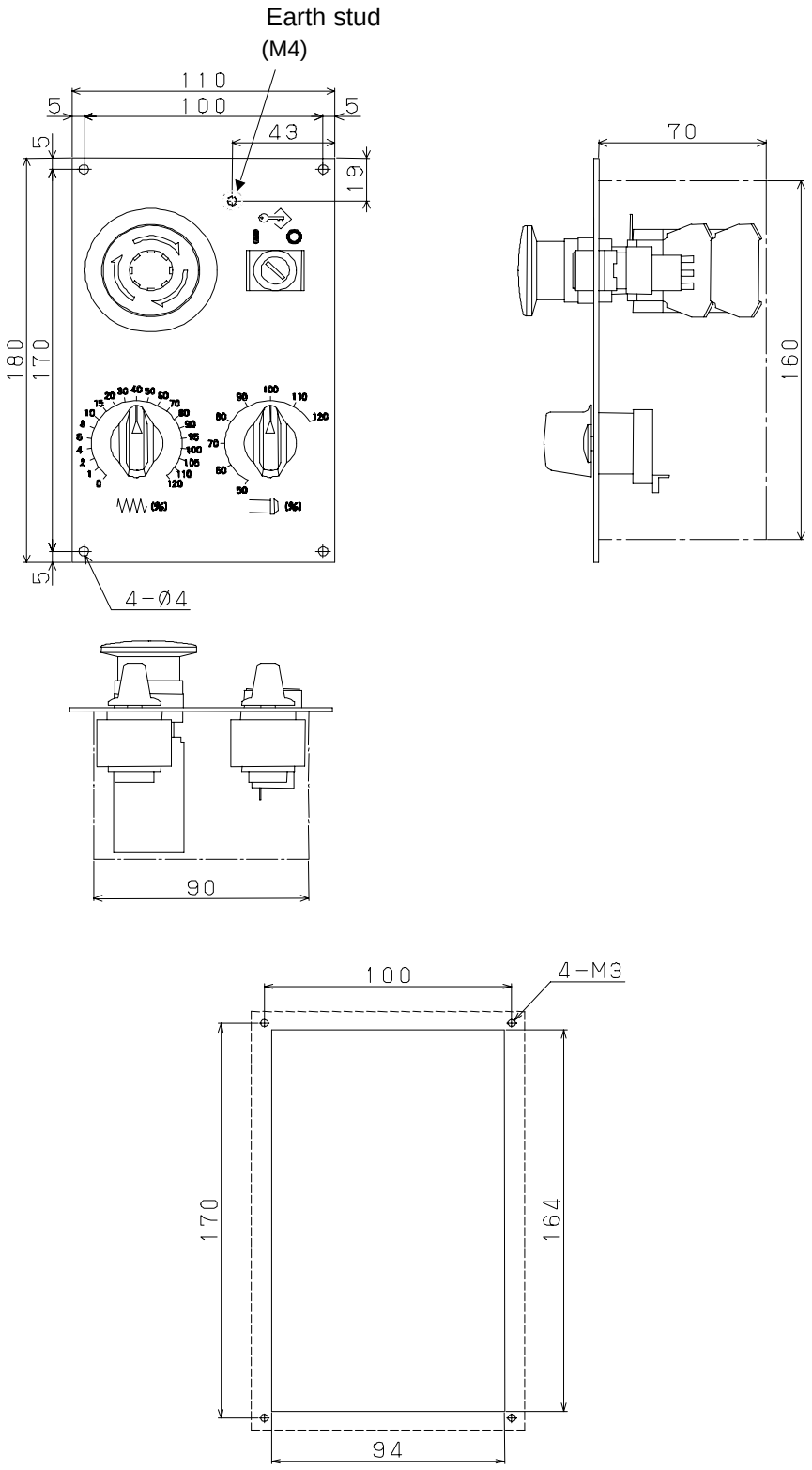

Unit = mm

Weight: 0.6kg

Panel cut drawing

Fig.U27 Machine operator's panel (Sub panel B1)
Specification No. : A02B–0236–C235

Connectors

Fig. title	Specification No.	Fig. No.
PCR connector (soldering type)	PCR–E20FS	Fig.C1 (a)
FI40 connector	FI40–2015S	Fig.C1 (b)
Connector case (HONDA PCR type)	PCR–V20LA/PCR–V20LB	Fig.C2 (a)
Connector case (HIROSE FI type)	FI–20–CV	Fig.C2 (b)
Connector case (FUJITSU FCN type)	FCN–240C20–Y/S	Fig.C2 (c)
Connector case (HIROSE PCR type)	FI–20–CV7	Fig.C2 (d)
AMP connector (1) for servo side	AMP1–178128–3	Fig.C3 (a)
AMP connector (2) for servo side	AMP2–178128–3	Fig.C3 (b)
AMP connector (3) for +24 V power supply	AMP1–178288–3	Fig.C3 (c)
AMP connector (4) for +24 V power supply	AMP2–178288–3	Fig.C3 (d)
Contact for AMP connector	AMP1–175218–2/5 AMP1–175196–2/5	Fig.C3 (e)
HONDA connector (case)		Fig.C4 (a)
HONDA connector (angled case)		Fig.C4 (b)
HONDA connector (male)		Fig.C4 (c)
HONDA connector (female)		Fig.C4 (d)
HONDA connector (terminal layout)		Fig.C4 (e)
Connector (FCI Japan)(3 pins/brown)	SMS3PN–5	Fig.C5
Connector for HIROSE flat cable	HIF3BB–50D–2.54R HIT3BB–34D–2.54R	Fig.C6
Connector (Japan Aviation Electronics)(for MDI)	LY10–DC20	Fig.C7 (a)
Contact (Japan Aviation Electronics)(for MDI)	LY10–C2–3	Fig.C7 (b)
Punch panel connector for reader/punch interface		Fig.C8 (a)
Locking plate for reader/punch interface connector		Fig.C8 (b)
Honda connector (for distribution I/O connection printed circuit board)	MRH–50FD	Fig. C9

TYPE : HONDA PCR–E20FS (SOLDERING TYPE)
USAGE : GENERAL
MATING
HOUSING : HONDA PCR–V20LA (PLASTIC)

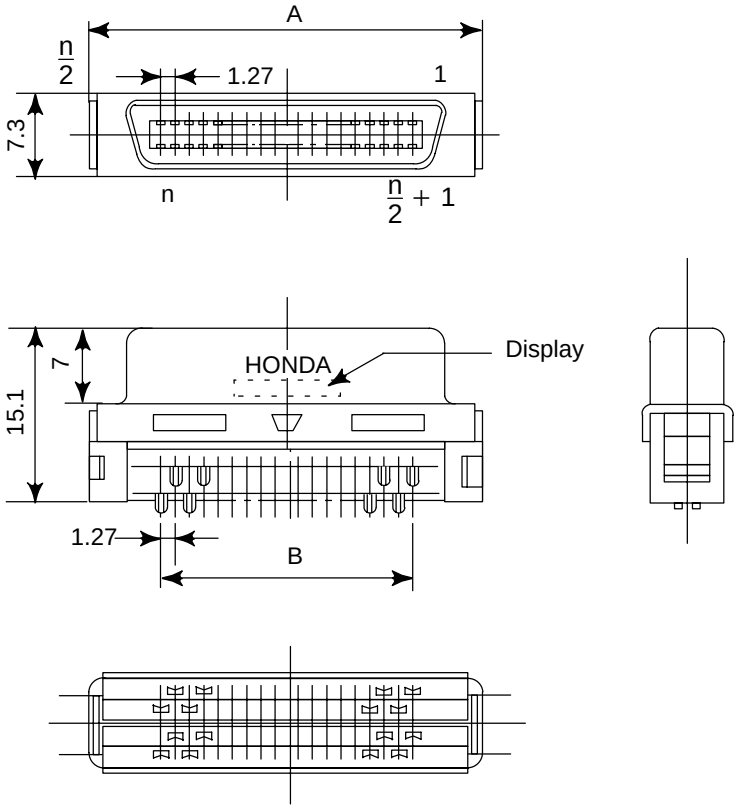

	A	B
PCR–E20FS	21.65	11.43

Fig. C1 (a) PCR connector (soldering type)

TYPE : HIROSE FI40–2015S
USAGE : PULSE CODER INTERFACE
LINEAR SCALE INTERFACE
MPG INTERFACE
MATING/HOUSING : HIROSE FI–20–CV

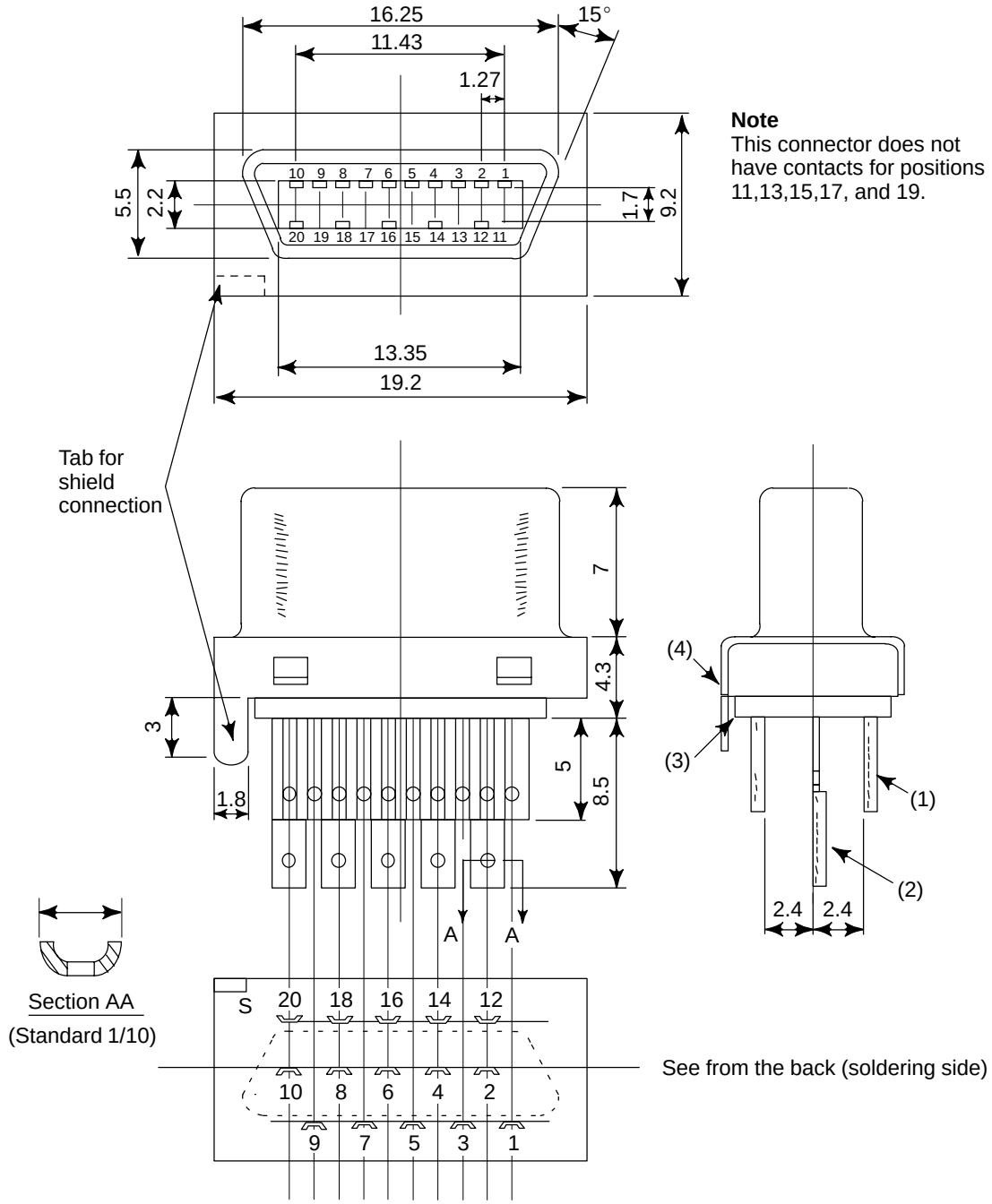

Note
This connector does not have contacts for positions 11,13,15,17, and 19.

Fig. C1 (b) FI40 connector

TYPE : HONDA PCR–V20LA (for 6 dia. cable)
USAGE : GENERAL

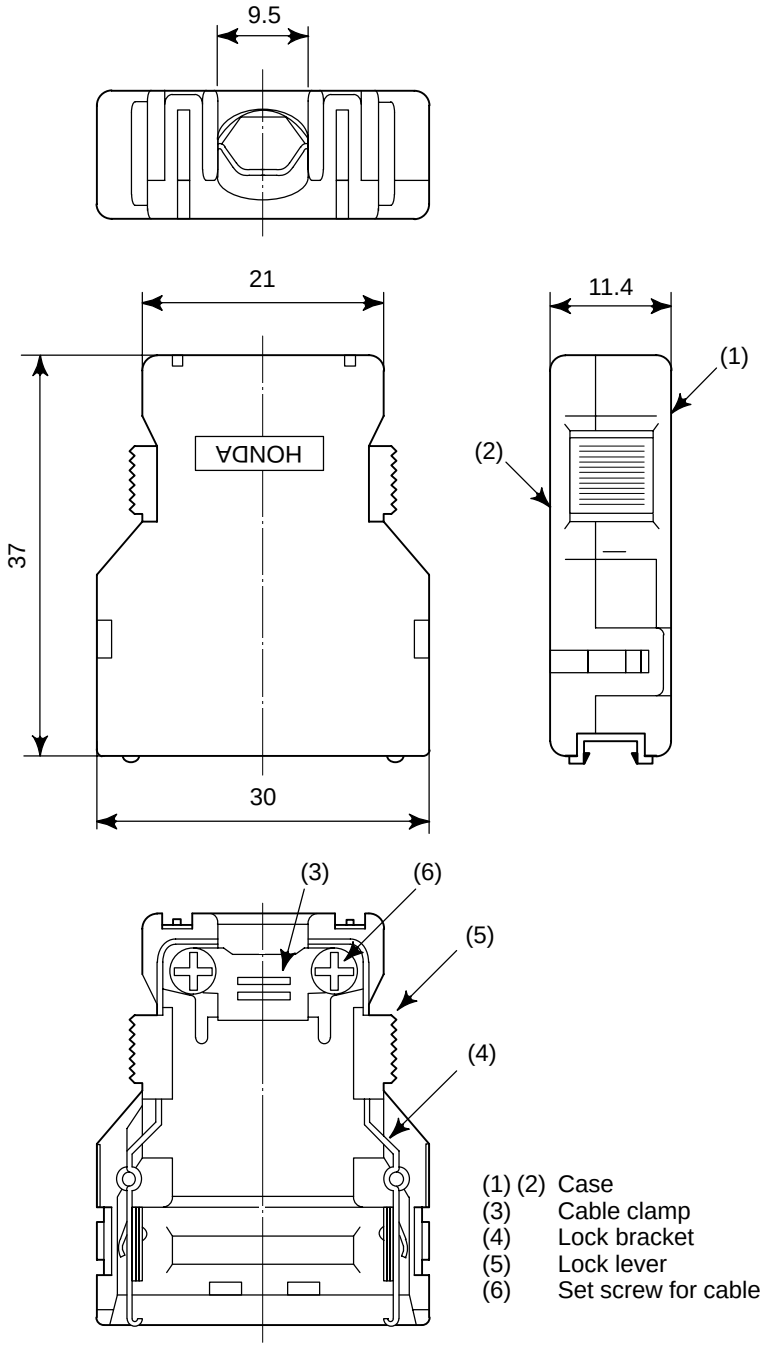

(1) (2) Case
(3) Cable clamp
(4) Lock bracket
(5) Lock lever
(6) Set screw for cable clamp

Fig. C2 (a) Connector case (HONDA PCR type)

TYPE : HIROSE FI–20–CV
USAGE : PULSE CODER INTERFACE
LINEAR SCALE INTERFACE
MANUAL PULSE GENERATOR INTERFACE

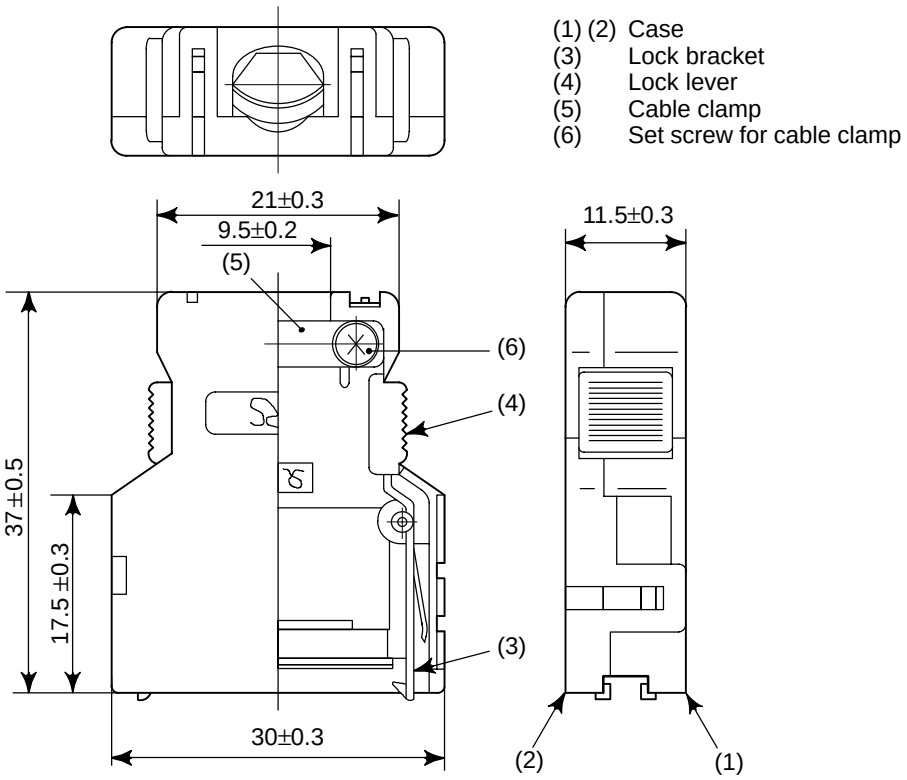

Fig. C2 (b) Connector case (HIROSE FI type)

TYPE : FUJITSU FCN–240C20–Y/S (for 5.8 dia. cable)
USAGE : GENERAL

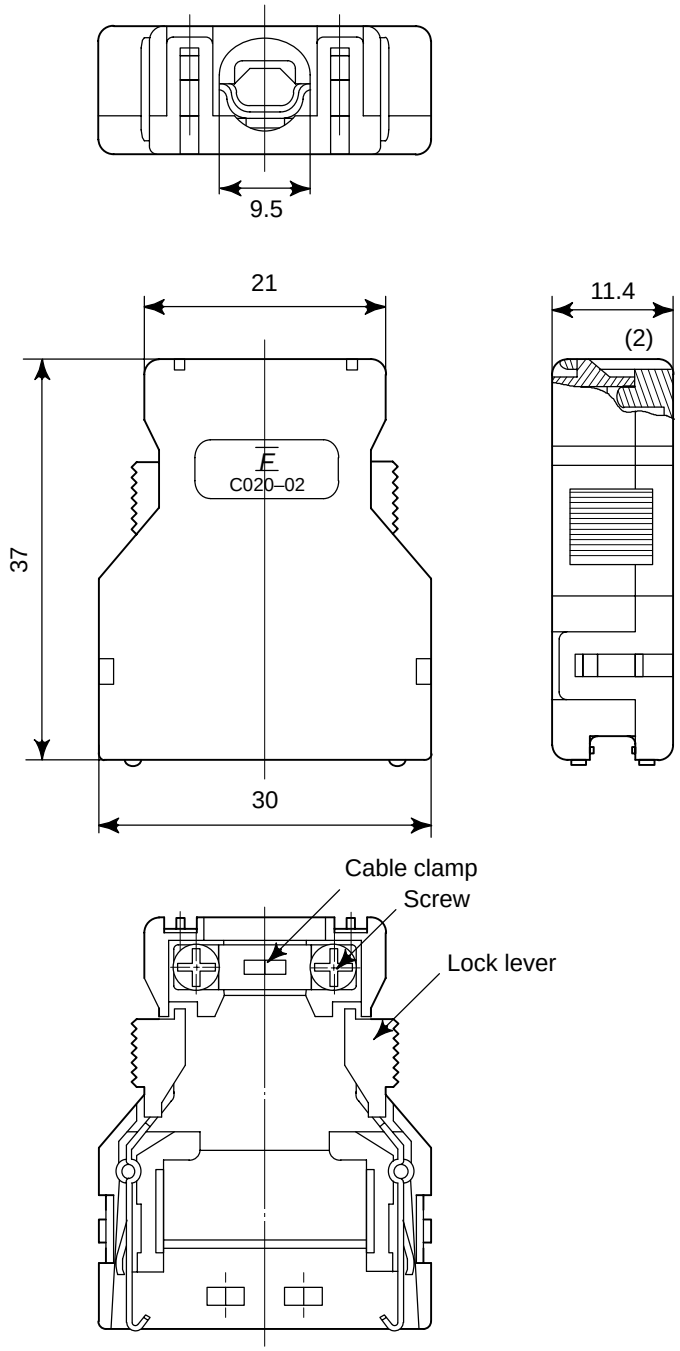

Fig. C2 (c) Connector case (FUJITSU FCN type)

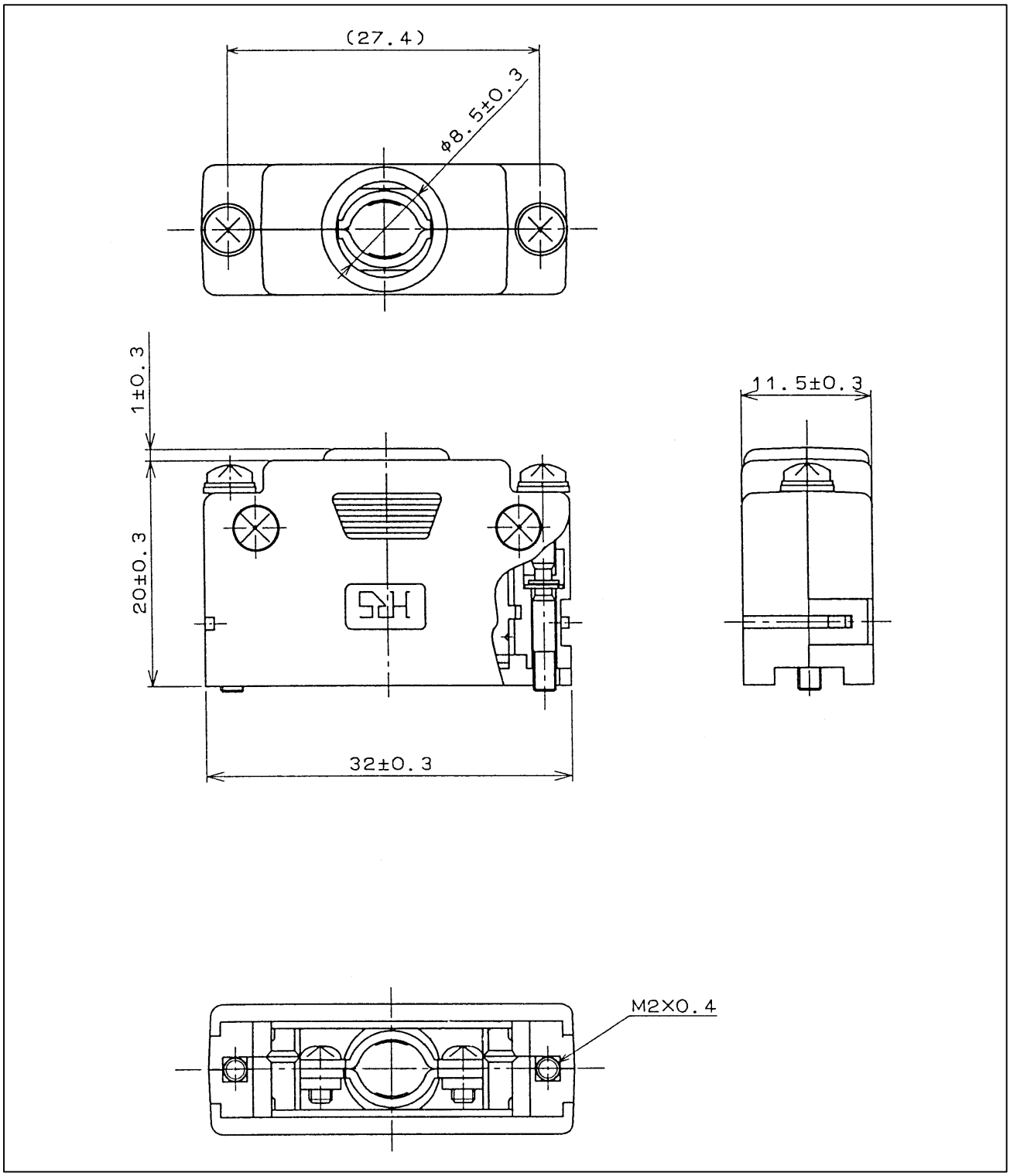

Fig. C2 (d) Connector case (PCR type (Hirose Electric))

TYPE : AMP1–178128–3

DIMENSION

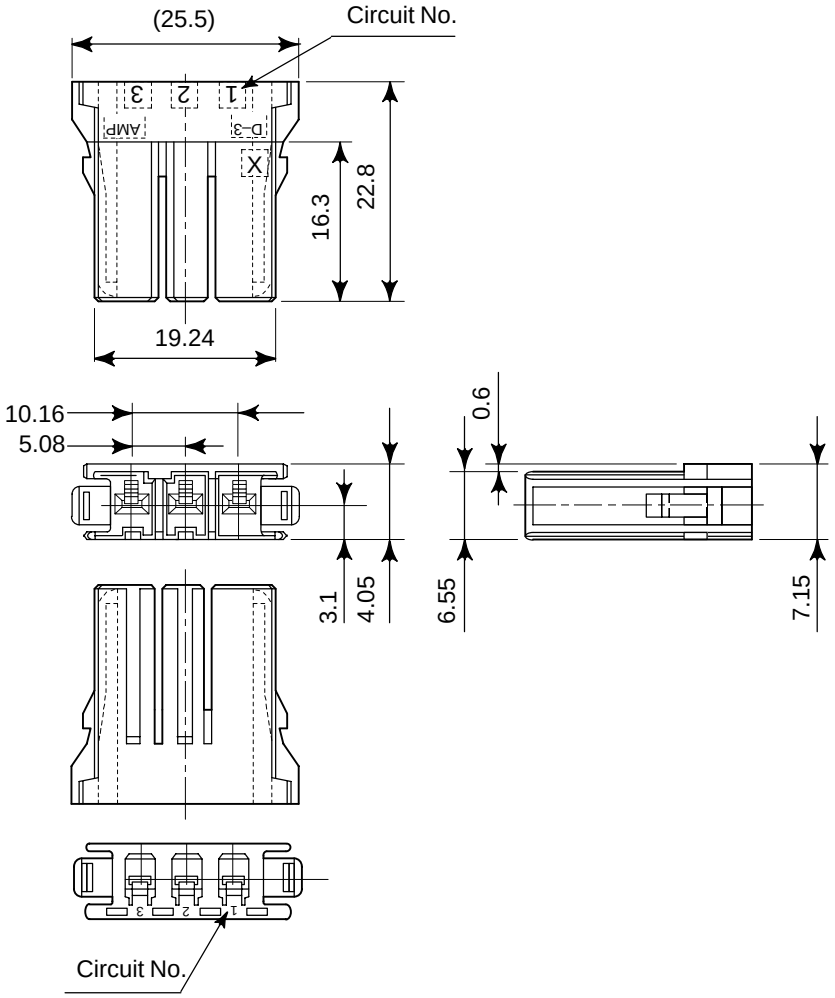

Fig. C3 (a) AMP connector (1)

TYPE : AMP2–178128–3

DIMENSION

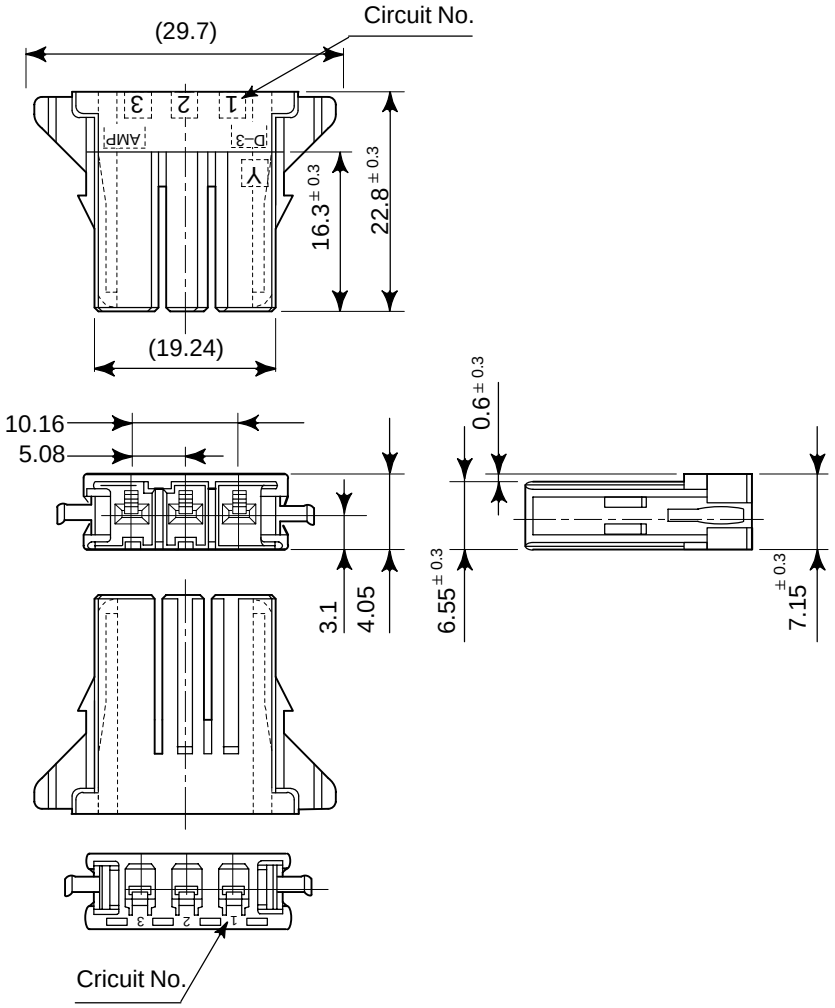

Fig. C3 (b) AMP connector (2)

TYPE : AMP1–178288–3

USAGE : POWER SUPPLY UNIT CP1A
+24V INPUT

3	
2	0V
1	+24V

DIMENSION

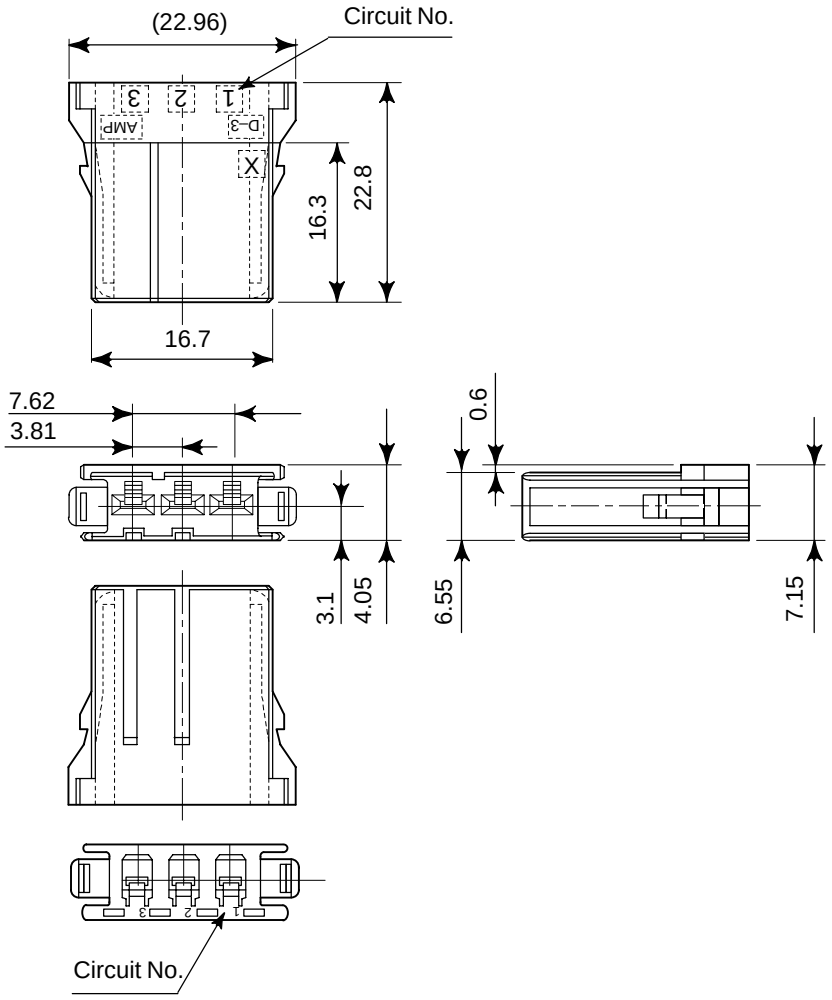

Fig. C3 (c) AMPconnector (3)

TYPE : AMP2–178288–3

USAGE : POWER CP1B
+24V OUTPUT

3	
2	0V
1	+24V

DIMENSION

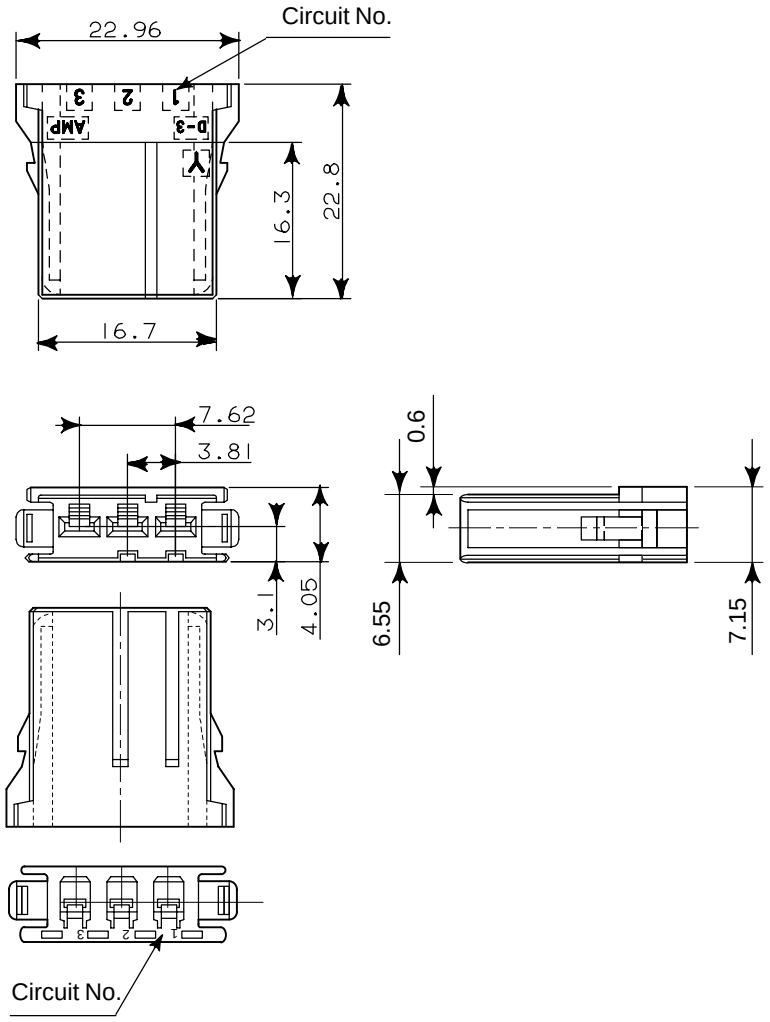

Fig. C3 (d) AMP connector (4)

SEPARATE : AMP1–175218–2(Gold coated)
AMP1–175218–5(Tin coated)

REEL : AMP1–175196–2(Gold coated)
AMP1–175196–5(Tin coated)

WIRE : AWG 16, 18, 20

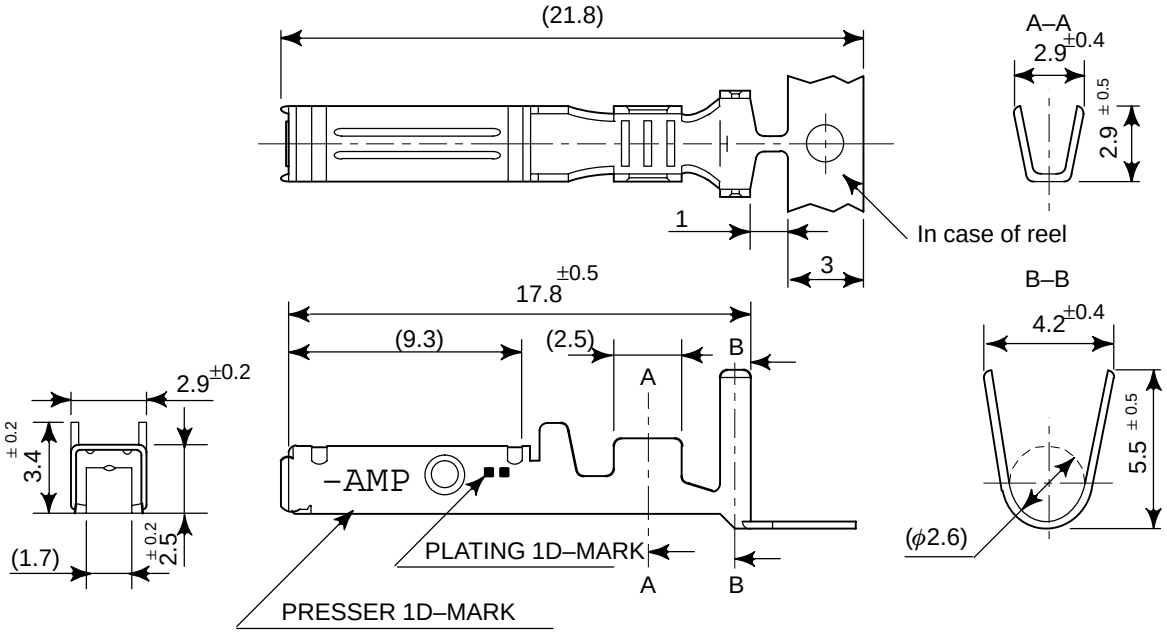

Fig. C3 (e) Contact for AMP connector

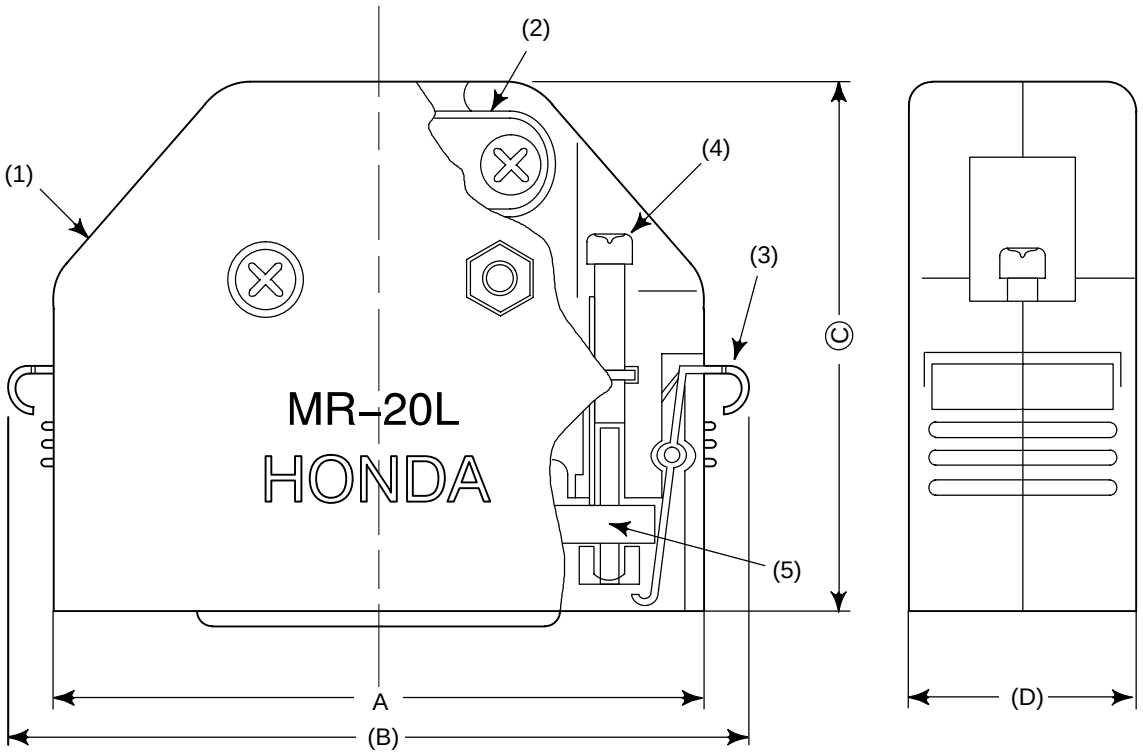

Specification \ Symbol	A	(B)	C	(D)	Number of terminals
MR–20LMH (Plug)	39.3	44.9	39.8	17	20
MR–20LFH (Jack)					
MR–50LMH (Plug)	67.9	73.5	44.8	18	50
MR–50LFH (Jack)					

Symbol	Name
1	Connector cover
2	Cable clamp
3	Stopper
4	Screw for cable clamp
5	Plug (MR–20, 50MH)
	Jack (MR–20, 50FH)

Outer diameter of the cable
MR–20L dia.10mm max
MR–50L dia.16mm max

Fig. C4 (a) HONDA connector (case)

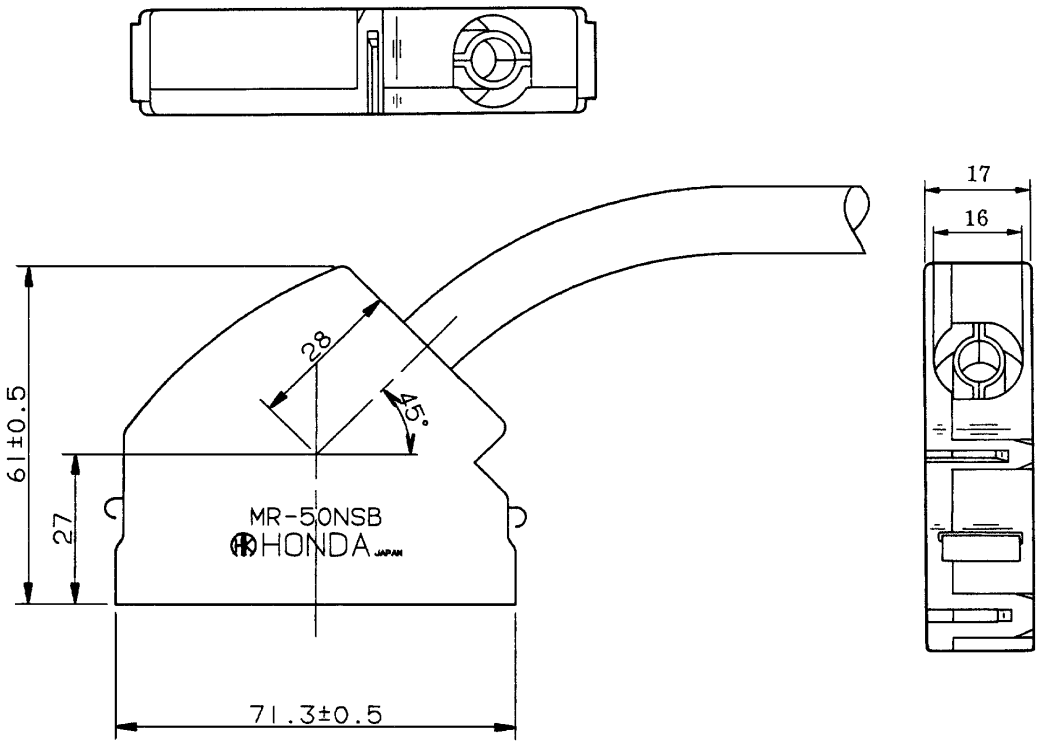

External dimensions of 50–pin connector

Fig. C4 (b) Honda connector (angled–type case)

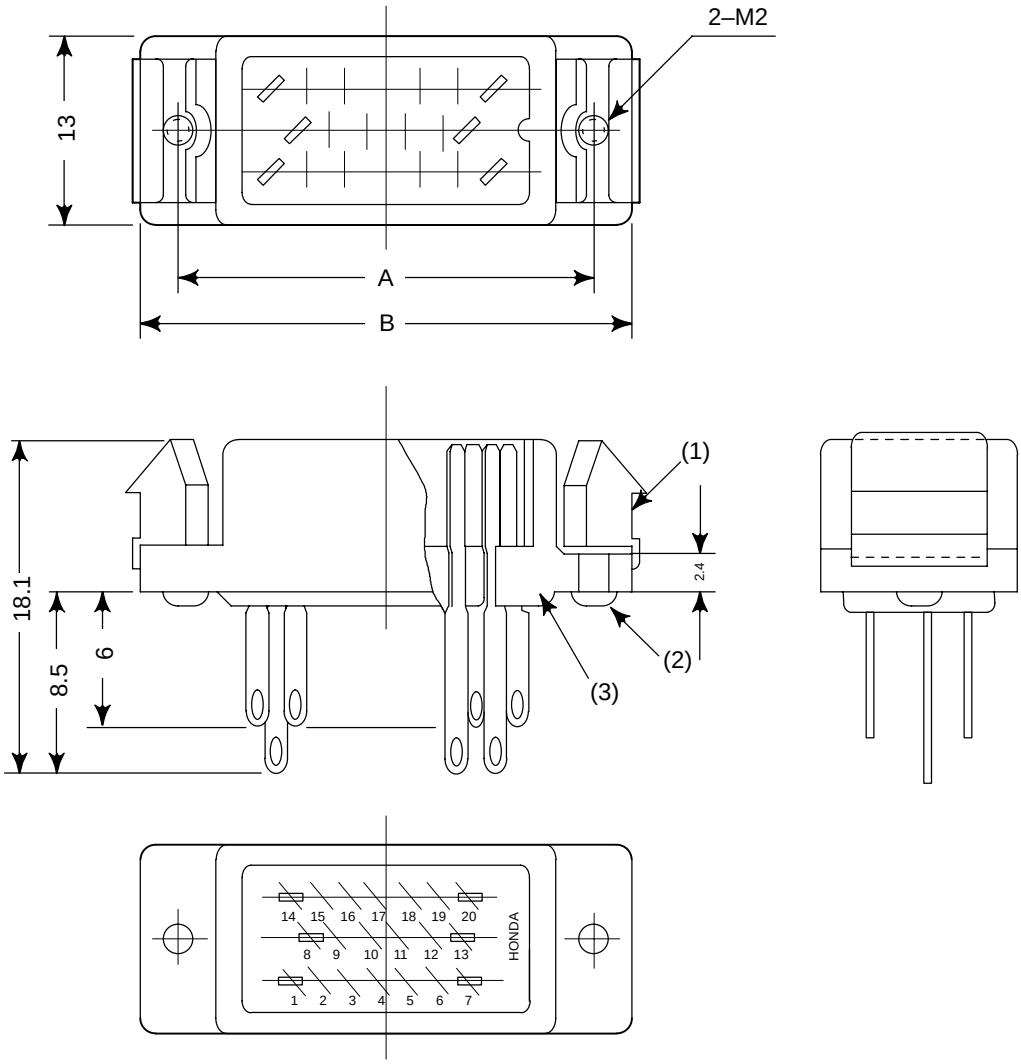

	A	B
MR–20RMH	32.8	27.8
MR–50RHF	61.4	56.4

Number of terminals
20
50

Symbol	Name
1	Cable clamp
2	Screw 2.6dia.×8
3	Connector (MR–20,–50MH)

Fig. C4 (c) HONDA connector (male)

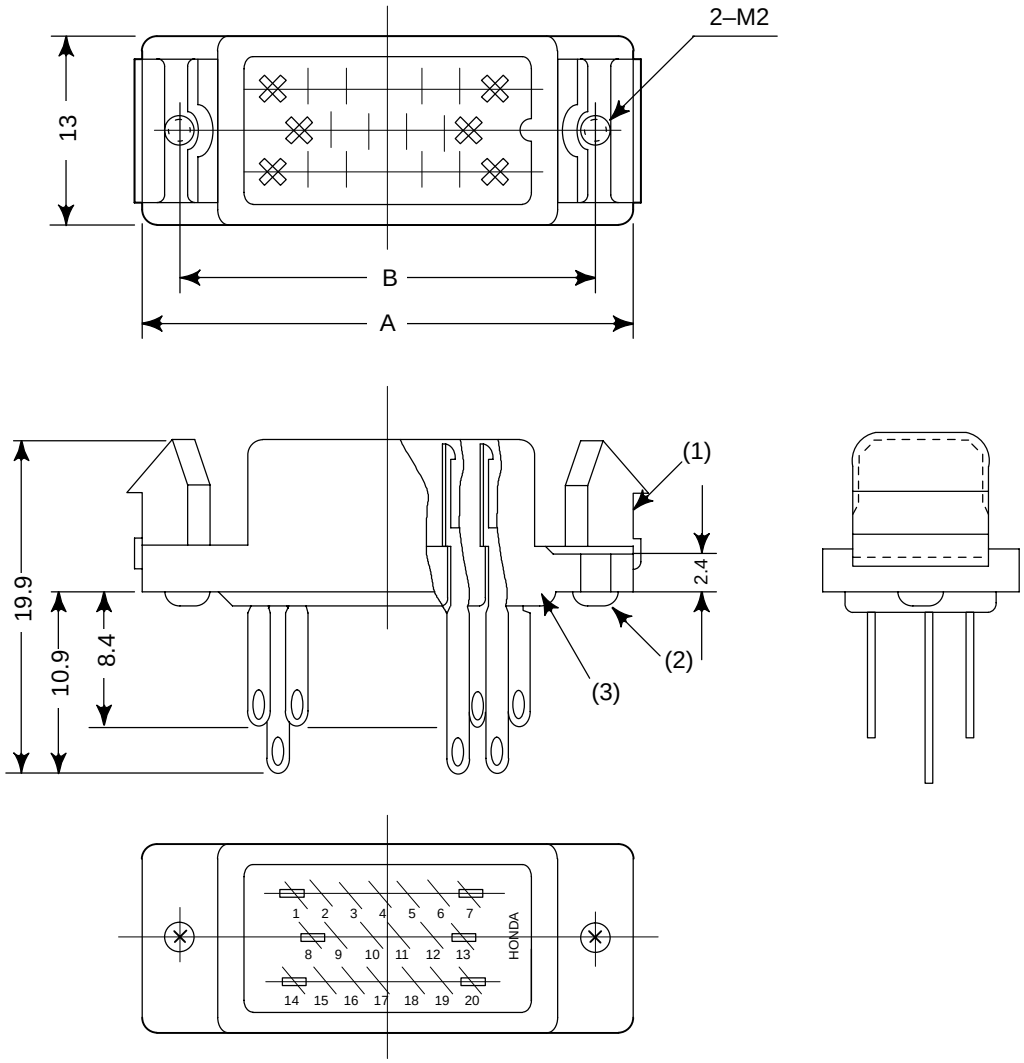

	A	B
MR–20RMH	32.8	27.8
MR–50RMH	61.4	56.4

Number of terminals
20
50

Symbol	Name
1	Cable clamp
2	Screw 2.6dia.×8
3	Connector (MR–20,– 50FH)

Fig. C4 (d) HONDA connector (female)

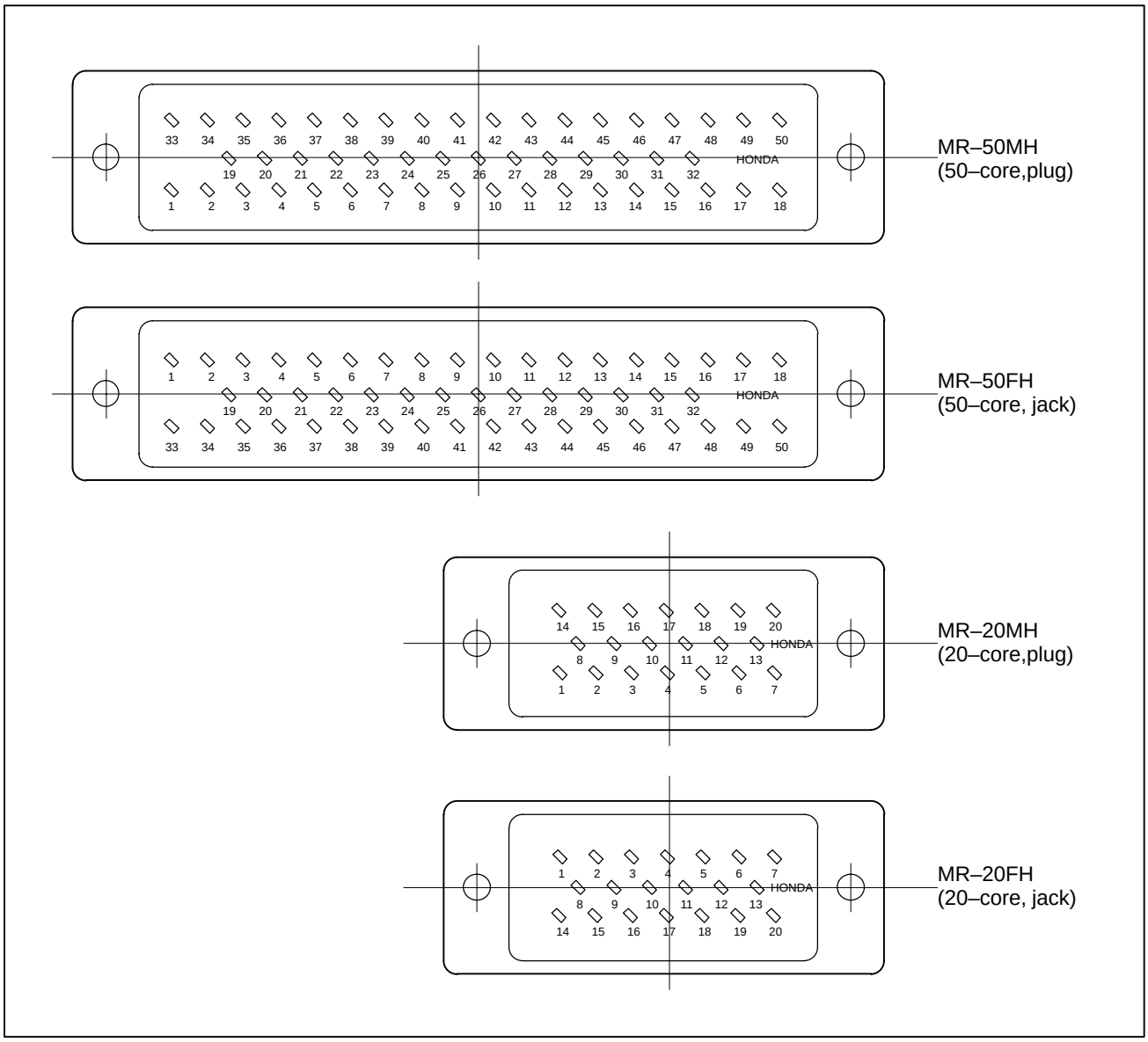

Fig. C4 (e) HONDA connector (terminal layout)

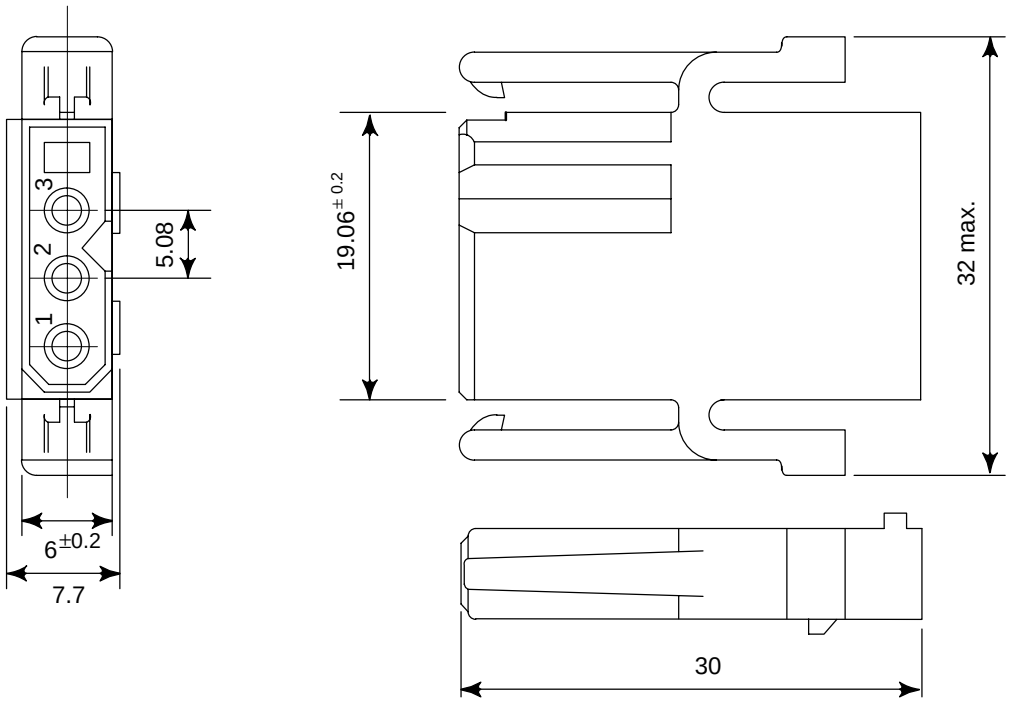

Manufacturer : FCI Japan

Name		Specification (Connector maker number)	Remarks
Connector housing for cable		SMS3PNS–5	Brown
Contact	(Crimp type)	RC16M–23T3	For details on tools required for crimp terminals,contact the manufacturer.
	(Solder type)	RC16M–SCT3	

Cables : Cross sectional area : 0.75mm^2(30/0.18)
Insulation diameter : 2.8mm max
Peeling length : 7.2mm

Fig. C5 Connector made by FCI Japan (3 pins,black)

CONNECTOR FOR FLAT CABLE (HIROSE ELEC. CO.)

Specification HIROSE ELEC. CO.

HIF3BB

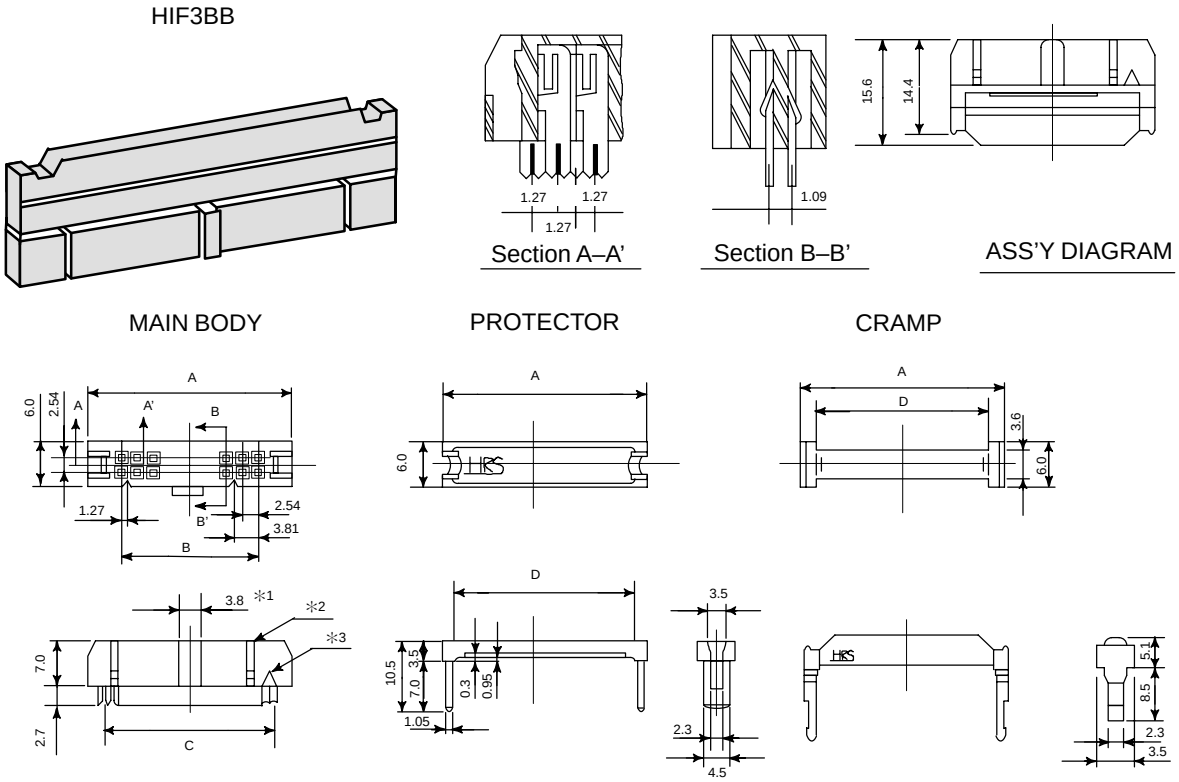

Dimensions

Description	No.of contact	A	B	C	D
HIF3BB–34D–2.54R	34	47.75	40.64	41.91	43.23
HIF3BB–50D–2.54R	50	68.07	60.96	62.23	63.6

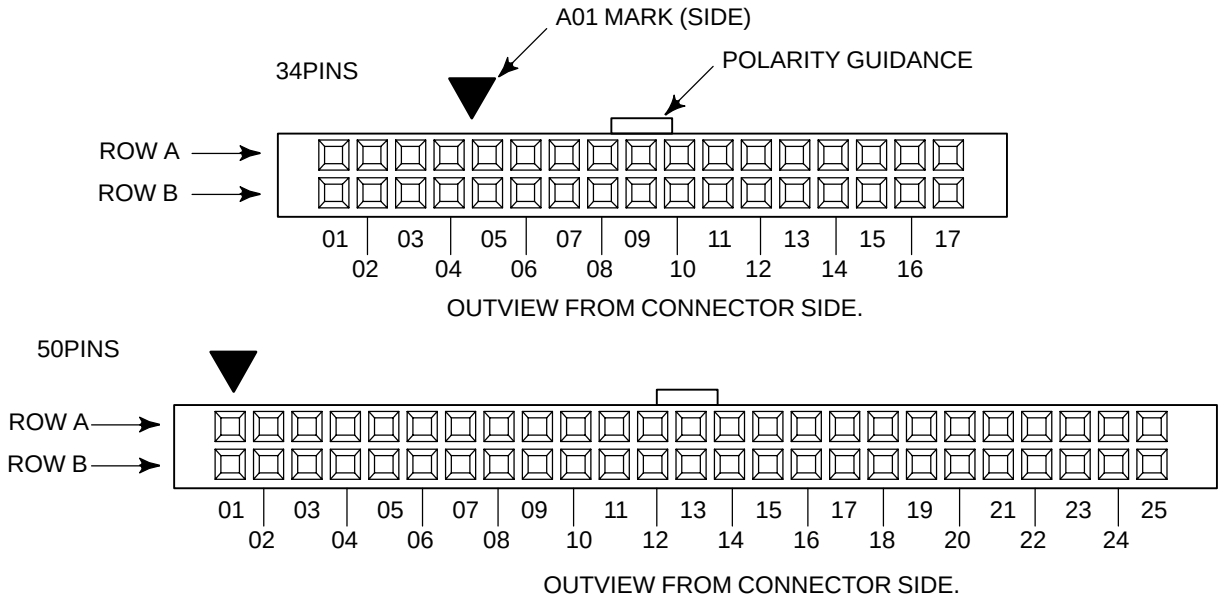

Fig. C6 Connector for HIROSE Flat cable

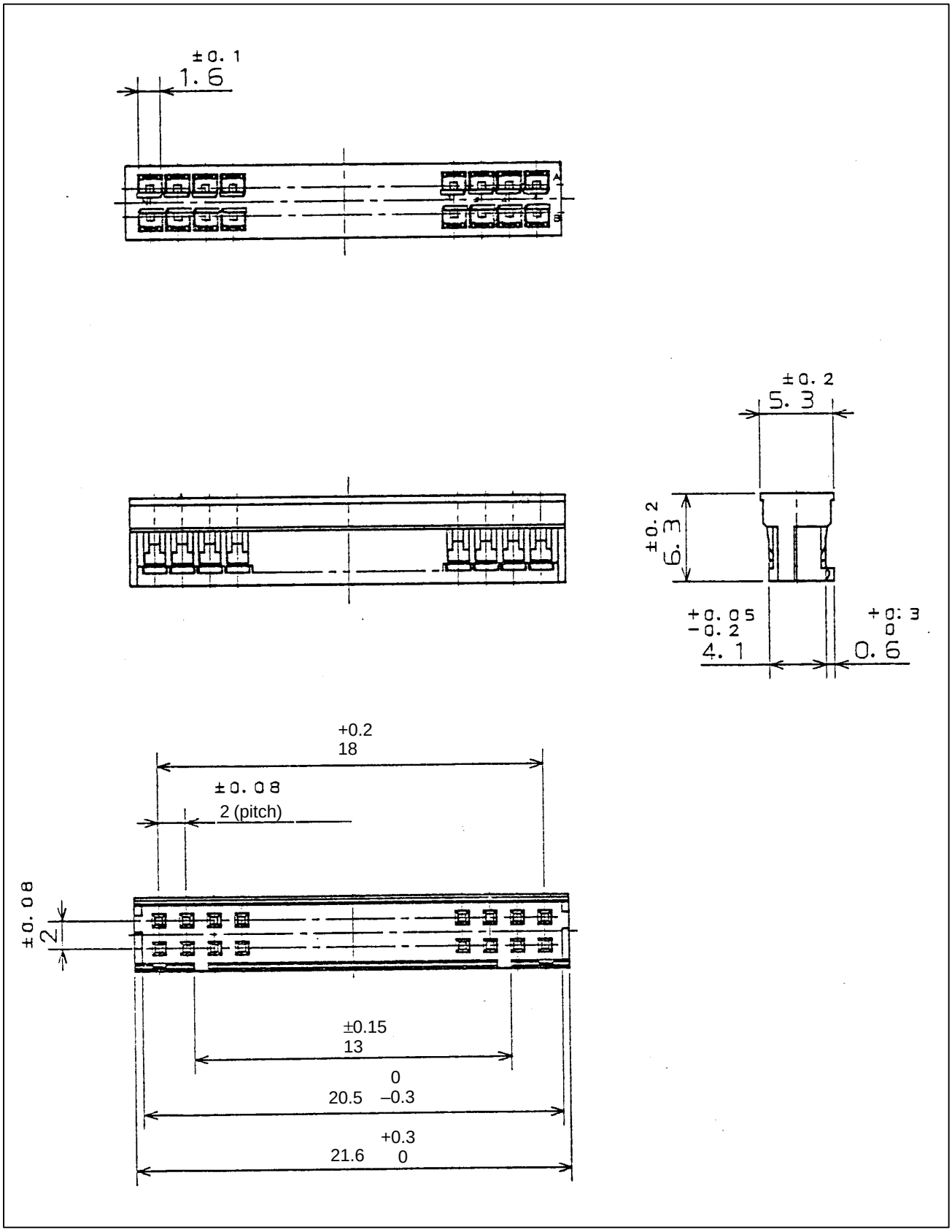

Fig. C7 (a) Connector (Japan Aviation Electronics)(for MDI)

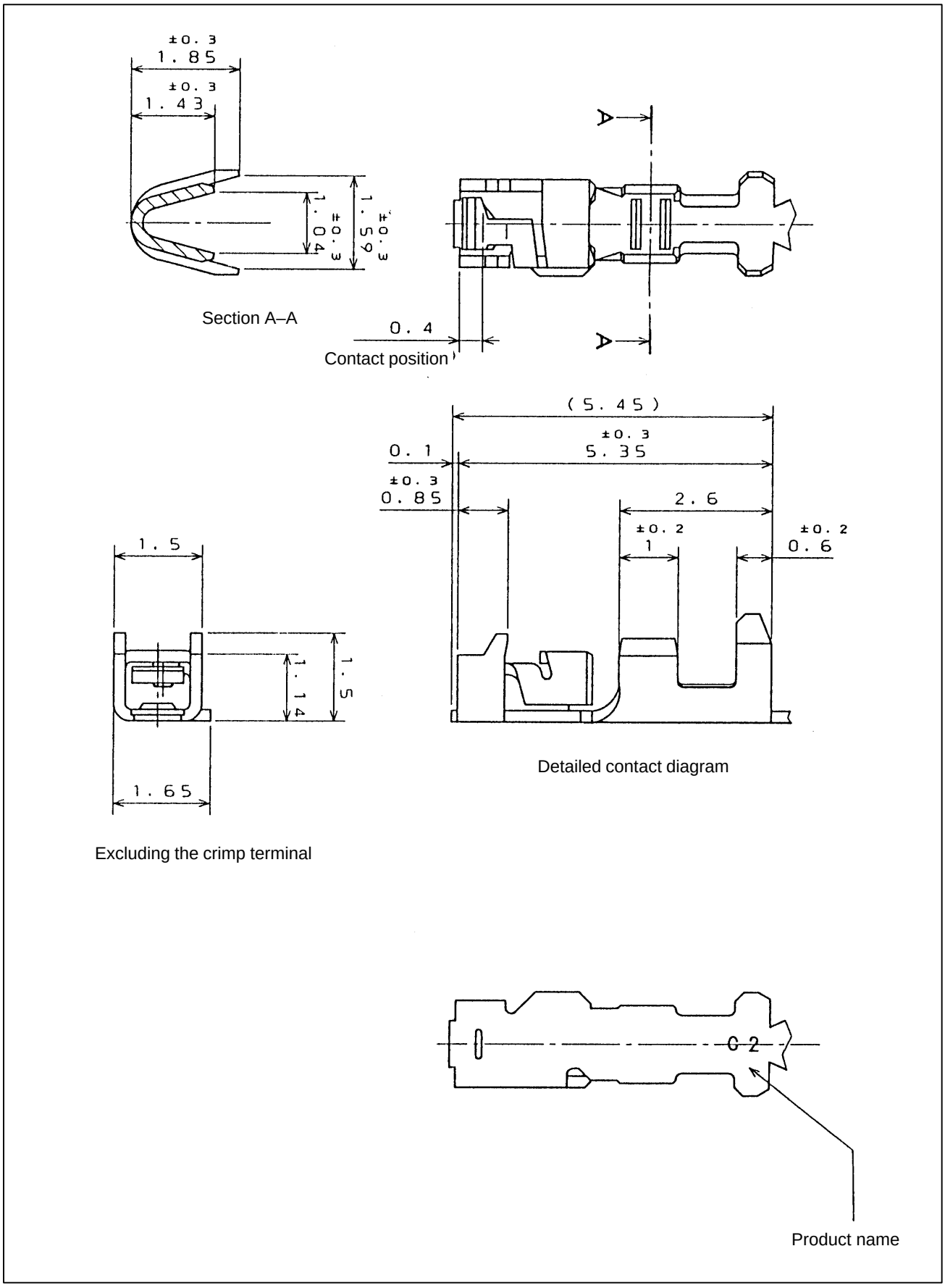

Fig. C7 (b) Contact (Japan Aviation Electronics)(for MDI)

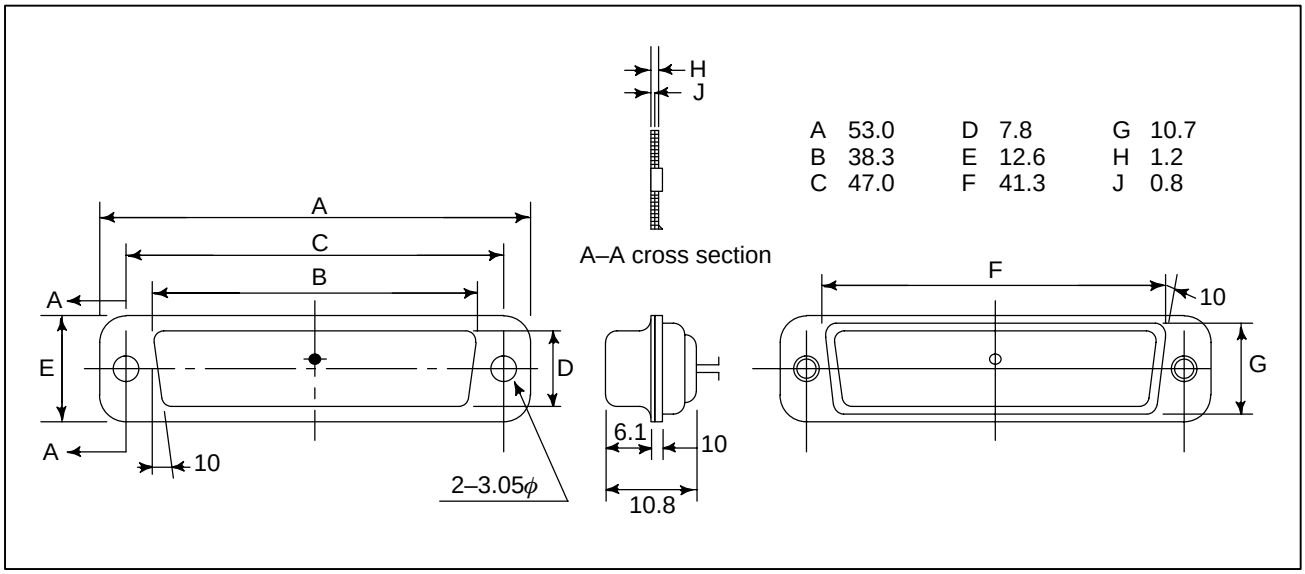

Fig. C8 (a) Punch panel connector for reader/puncher interface

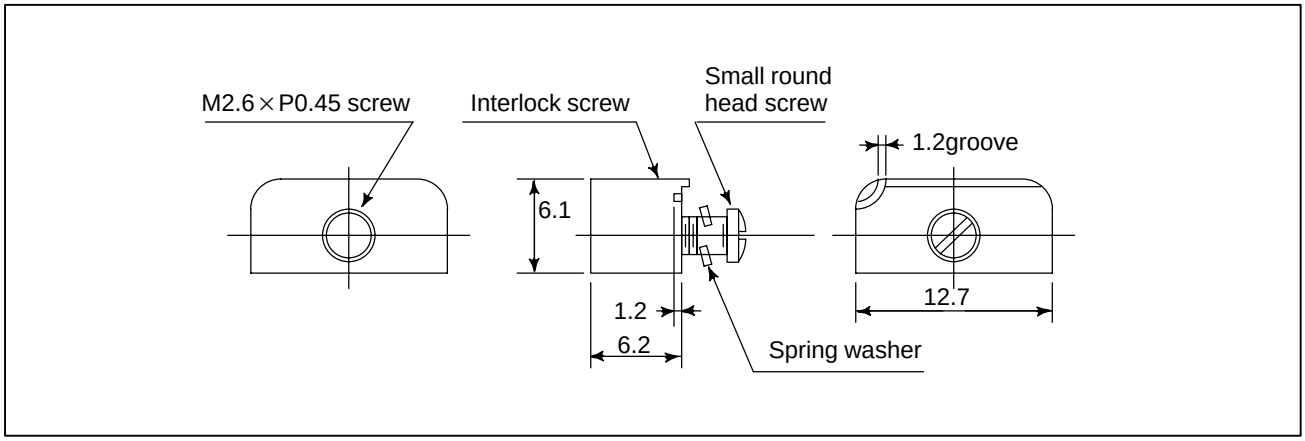

Fig. C8 (b) Locking plate plate for reader/puncher interface connector

Honda MR type, 50 pins, male, connection printed circuit board soldering type connector

Type No. Honda Tsushin Kogyo Co., Ltd.
MRH–50FD

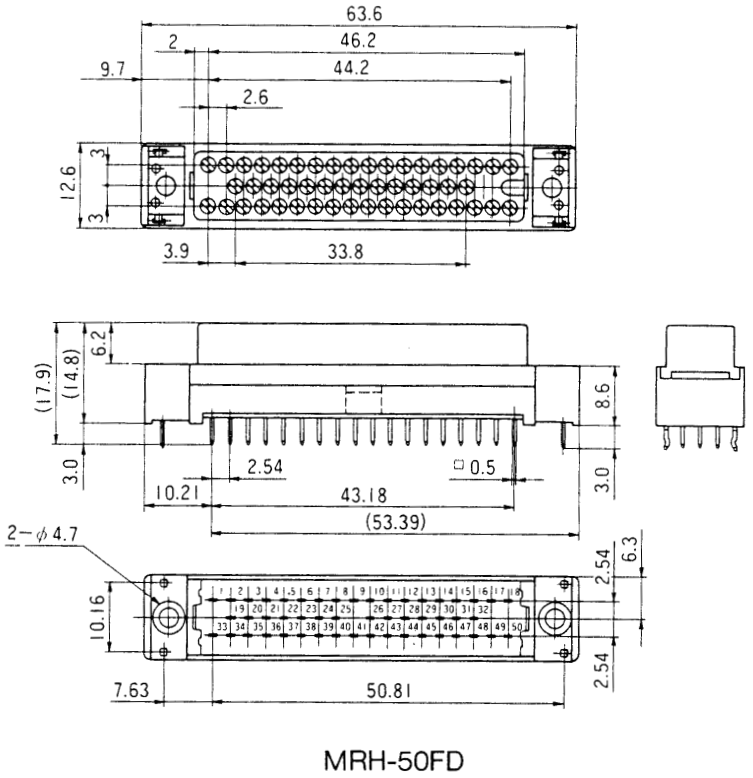

Pin configuration of Honda MR connector, 50 pins, male

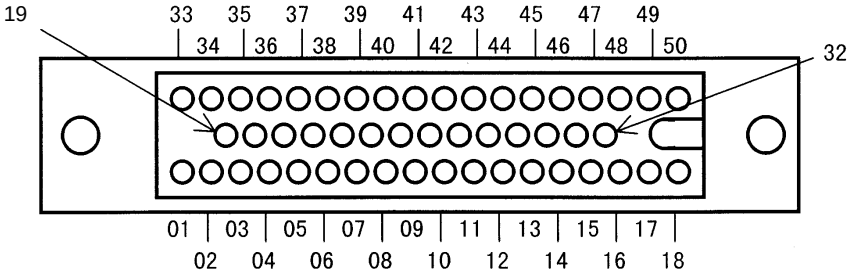

Viewed from the connector side

Fig. C9 Honda connector

B 20–PIN INTERFACE CONNECTORS AND CABLES

B.1 OVERVIEW

This section explains the recommended (FANUC–approved) connectors for the 20–pin interface, used with the following target models, and the corresponding cables.

B.2 BOARD–MOUNTED CONNECTORS

Model : PCR–EV20MDT produced by Honda Tsushin or
52618–2011 produced by Japan Molex

The board–mounted connector has been specially developed to achieve the FANUC proprietary high packing density. However, the mating mechanism of the connector is compatible with that of Honda PCR series connectors. Therefore, Honda PCR series connectors can be used as cable connectors. Because cable connectors support this specification extensively, many connector manufacturers offer custom–tailored models.

B.3 CABLE CONNECTORS

Cable connectors consist of a connector main body and housing. The models listed below are available. Those connectors not marked with an asterisk are currently being mass–produced as manufacturer's standard models. Those marked with an asterisk are produced according to custom specifications by FANUC.

	Use	Type	Manufacturer	Connector model	Housing model	Applicable cable outside diameter
Cable connector	General use (MDI, IOLINK, AMP, SPDL, etc.)	Strand wire press–mount type	Honda	PCR–E20FA	PCR–V20LA*	ϕ 6mm (ϕ5.7 to 6.5)
					PCS–E20LA	ϕ 6mm (ϕ5.7 to 6.5)
			Hirose	FI30–20S*	FI–20–CV2*	ϕ 6.2mm (ϕ5.5 to 6.5)
			Fujitsu	FCN–247J020 –G/E	FCN–240C020 –Y/S*	ϕ 5.8mm (ϕ5.5 to 6.5)
			Molex	52622–2011*	52624–2015*	ϕ 6.2mmϕ (5.9 to 6.5)
		Soldering type	Honda	PCR–E20FS	PCR–V20LA*	ϕ 6mm (ϕ5.7 to 6.5)
					PCS–E20LA	ϕ 6mm (ϕ5.7 to 6.5)
			Hirose	FI40–20S*	FI–20–CV2*	ϕ 6.2mm (ϕ5.5 to 6.5)
				FI40B–20S* (FI40A–20S*)	FI–20–CV5*	ϕ 9.2mm (ϕ8.9 to 9.5)
				FI40B–20S*	FI–20–CV6*	ϕ 10.25mm (ϕ9.5 to 11.0)
	For pulse coder, coaxial cable, linear scale, manual pulse generator, etc.	Soldering type	Hirose	FI40B–2015S* (FI40–2015S*)	FI–20–CV*	ϕ 8.5mm (ϕ8.0 to 9.0)
				FI40B–20S* (FI40A–20S*)	FI–20–CV5*	ϕ 9.2mm (ϕ8.9 to 9.5)
				FI40B–20S*	FI–20–CV6*	ϕ 10.25mm (ϕ9.5 to 11.0)
			Honda	PCR–E20FS	PCR–V20LA*	ϕ 6mm (ϕ5.7 to 6.5)
					PCS–E20LA	ϕ 6mm (ϕ5.7 to 6.5)

Fig. B.3 Cable connectors

Cable Connectors

Strand wire press–mount connector :
With this connector, #28AWG wires are press–connected to each pin at the same time. The cost of producing a cable/connector assembly with this connector model is much lower than with connectors designed for crimping or soldering.

Soldering type connector : Details of soldering type connectors and their housings are summarized below.

Table B.3 Details of soldering type connectors and housings

- **Connectors**

Connector model (manufacturer)	Supplementary description
PCR–E20FS (Honda)	Soldering type connector for general signals. This is suitable for producing cable assemblies in small quantities, as well as on–site.
FI40–20S (Hirose)	Equivalent to Honda PCR–E20FS
FI40B–20S (Hirose) (formerly, FI40A–20S)	Has the same number of pins as the FI40–20S, but features a wider soldering pitch, facilitating soldering and enabling the use of thicker wires. Its reinforced pins allow wires as thick as #17AWG to be soldered to the FI40B–20S (wires no thicker than #20AWG can be used with the FI40A–20S). Note, however, that a thick wire, such as #17AWG, should be used with a more robust housing like the FI–20–CV6.
FI40B–2015S (Hirose) (formerly, FI40–2015S)	Features a wider soldering pitch, attained by using the space provided by thinning out some pins. Also features tougher pins, compared with its predecessor, the FI40–2015S. These pins can be soldered to wires as thick as #17AWG, provided that the cable diameter does not exceed 8.5 mm.

- **Housings**

Housing model (manufacturer)	Supplementary description
FI–20–CV5 (Hirose)	Should be used with the FI40B–20S. This is a plastic housing designed for use with a cable that is 9.2 mm in diameter.
FI–20–CV6 (Hirose)	Should be used with the FI40B–20S. This housing, however, can be used with a thicker cable (such as 10.25 mm) than is possible with the FI–20–CV6. Its components are die cast.

In addition to the combinations shown in Fig. B.4, Hirose soldering–type connectors can be combined with the housings listed below. Ensure that the diameter of the cable used with each housing satisfies the requirements of that housing.

Connector model		Housing model (applicable cable diameter)
• FI40B–2015S (formerly FI40–2015S)	⟷	FI–20–CV (8.5 mm in diameter) only
• FI40–20S FI40B–20S (formerly FI40A–20S)	⟷	FI–20–CV2 (6.2mm in diameter) FI–20–CV5 (9.2mm in diameter) FI–20–CV6 (10.25mm in diameter) Those listed on the left can be used.

B.4 RECOMMENDED CONNECTORS, APPLICABLE HOUSINGS, AND CABLES

Table B.4 Recommended connectors, applicable housings, and cables

Connector name referenced in the Connection Manual	FANUC–approved connector (manufacturer)	FANUC–approved housing (manufacturer)	Compatible cable (cable diameter) FANUC development FANUC specification number	Remark
PCR–E20FA Strand press–mount type	PCR–E20FA (Honda Tsushin)	PCR–V20LA (Honda Tsushin)	A66L–0001–0284#10P (6.2 mm in diameter)	Plastic housing
	FI30–20S (Hirose Electric)	FI–20–CV2 (Hirose Electric)		Plastic housing
	FCN–247J020–G/E (Fujitsu Takamizawa)	FCN–240C020–Y/S (Fujitsu Takamizawa)		Plastic housing
	52622–2011 (Molex)	52624–2015 (Molex)		Plastic housing
PCR–E20FS Soldering type	PCR–E20FS (Honda Tsushin)	PCR–V20LA (Honda Tsushin)		Plastic housing
		PCS–E20LA (Honda Tsushin)		Metal housing
	FI40–20S (Hirose Electric)	FI–20–CV2 (Hirose Electric)		Plastic housing
FI40B–2015S (formerly FI40–2015S) 15–pin soldering type	FI40B–2015S (formerly FI40–2015S) (Hirose Electric)	FI–20–CV5 (Hirose Electric)	A66L–0001–0367 A66L–0001–0368 (9.2 mm in diameter)	Plastic housing

NOTE

*1 Cable A66L–0001–0286 has been recommended for use as a pulse coder cable. It can be up to 20 m long. Two cables, A66L–0001–0402 and A66L–0001–0403, have recently been developed. A66L–0001–0402 and A66L–0001–0403 can be as long as 30 m and 50 m, respectively. (See Fig. 4 for detailed specifications.)
Both cables have the same level of oil and bending resistance (cable, 100 mm in diameter, capable of withstanding at least 10 million bending cycles) as conventional cables, and are UL– and CSA–certified.

Press–mount type connector assembly tools and jigs

Connector model referenced in the Connection Manual	FANUC–approved connector (manufacturer)	Wire forming tool	Press–mounting tool	Remark
PCR–E20FA	PCR–E20FA (Honda Tsushin)	PCS–K2A	FHPT–918A	Low cost
		JGPS–015–1/1–20 JGPS–014	MFC–K1 PCS–K1	(Note 1)
		FHAT–918A		
	FI30–20S (Hirose Electric)	FI30–20CAT	FI30–20/ID	Low cost
		FI30–20CAT1	HHP–502 FI30–20GP	
	FCN–247J020–G/S (Fujitsu)	FCN–237T–T043/H	FCN–237T–T109/H FCN–247T–T066/H	
		FCN–237T–T044/H		
		FCN–237T–T062/H		
	52622–2011 (Molex)	57829–5000	57830–5000	Low cost
		57823–5000	57824–5000	

NOTE

1 Those tools indicated by shading are available from FANUC (specification number A02B–0120–K391).

2 The tools available from each manufacturer are specifically designed for use with the connectors manufactured by that manufacturer.

Materials for cable assemblies

Machine tool builders are required to manufacture or procure the materials for the cable assemblies to be used with their products. FANUC recommends the following materials as being suitable for interface connectors. Individual machine tool builders are encouraged to contact each cable manufacturer for themselves, as required.

Material	Use	Constitution	FANUC specification number	Manufacturer	Remark
10–pair cable	General use	0.08mm^2 10–pair	A66L–0001–0284 #10P	Hitachi Cable, Ltd. Oki Electric Cable Co., Ltd. SHINKO ELECTRIC INDUSTRIES CO., LTD.	
5–conductor coaxial cable	CRT/LCD interface (long–distance)	5–conductor coaxial	A66L–0001–0371	Hitachi Cable, Ltd.	50 m or less
12–conductor composite cable	Pulse coder, linear scale, manual pulse generator	0.5mm^2 6–conductor 0.18mm^2 3–pair	A66L–0001–0286	Hitachi Cable, Ltd. Oki Electric Cable Co., Ltd. SHINKO ELECTRIC INDUSTRIES CO., LTD.	20 m or less
		0.75mm^2 6–conductor 0.18mm^2 3–pair	A66L–0001–0402	Oki Electric Cable Co., Ltd.	30 m or less Usable on movable parts
		1.25mm^2 6–conductor 0.18mm^2 3–pair	A66L–0001–0403	Oki Electric Cable Co., Ltd.	50 m or less Usable on movable parts

10–pair cable

(a) Specifications

Item		Unit	Specifications
Product No.		–	A66L–0001–0284#10P
Manufacturer			Hitachi Cable,Ltd. Oki Electric Cable, Co.,Ltd. SHINKO ELECTRIC INDUSTRIES CO., LTD.
Rating		–	60°C 30V:UL2789 80°C 30V:UL80276
Material	Conductor	–	Stranded wire of tinned annealed copper (ASTM B–286)
	Insulator	–	Cross–linked vinyl
	Shield braid	–	Tinned annealed copper wire
	Sheath	–	Heat–resistant oilproof vinyl
Number of pairs		Pairs	10
Conductor	Size	AWG	28
	Structure	Conductors /mm	7/0.127
	Outside diameter	mm	0.38
Insulator	Thickness	mm	0.1 Thinnest portion : 0.08 (3.1mm)
	Outside diameter (approx.)	mm	0.58
	Core style (rating)	mm	UL15157(80°C, 30V)
Twisted pair	Outside diameter (approx.)	mm	1.16
	Pitch	mm	20 or less
Lay		–	Collect the required number of twisted pairs into a cable, then wrap binding tape around the cable. To make the cable round, apply a cable separator as required.
Lay diameter (approx.)		mm	3.5
Drain wire		Conductors /mm	Hitachi Cable : Not available Shinko Electric : Not available Oki Electric Cable : Available,10/0.12
Shield braid	Element wire diameter	mm	0.12
	Braid density	%	85 or more
Sheath	Color	–	Black
	Thickness	mm	1.0
	Outside diameter (approx.)	mm	6.2
Standard length		m	200
Packing method		–	Bundle
Electrical performance	Electric resistance (at 20°C)	Ω/km	233 or less
	Insulation resistance (at 20°C)	MΩ–km	10 or more
	Dielectricstrength (AC)	V/min.	300
Flame resistance		–	Shall pass flame resistance test VW–1SC of UL standards.

(b) Cable structure

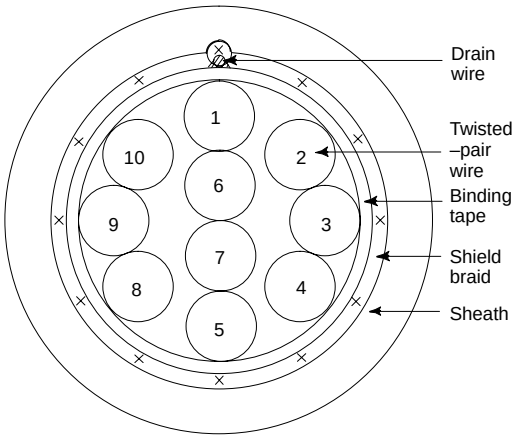

Wire identification table

Pair No.	Insulator color	Dot mark (1 pitch)	Dot mark color	
			First wire	Second wire
1	Orange	–	Red	Black
2	Gray	–	Red	Black
3	white	–	Red	Black
4	Yellow	–	Red	Black
5	Pink	–	Red	Black
6	Orange	– –	Red	Black
7	Gray	– –	Red	Black
8	White	– –	Red	Black
9	Yellow	– –	Red	Black
10	Pink	– –	Red	Black

The numbers assigned to the wires correspond to the numbers in the table at right.

Fig. B.4

Composite 12–core cable

(a) Specifications

Item		Unit	Specifications	
Product No.		–	A66L–0001–0286	
Manufacturer		–	Oki Cable, Ltd. Hitachi Electric Cable Co., Ltd. SHINKO ELECTRIC INDUSTRIES CO., LTD.	
Rating		–	80°C, 30V	
Material	Conductor,braid–shielded wire,drain wire	–	Strand wire of tinned annealed copper (JIS C3152)	
	Insulator	–	Heat–resistant flame–retardant vinyl	
	Sheath	–	Oilproof, heat–resistant, flame–retardant vinyl	
Number of wires (wire ons.)		Cores	6 (1 to 6)	6 (three pairs) (7 to 9)
Conductor	Size	mm^2	0.5	0.18
	Structure	Conductors /mm	20/0.18	7/0.18
	Outside diameter	mm	0.94	0.54
Insulator	Standard thickness (The minimum thickness is at least 80% of the standard thickness.)	mm	0.25	0.2
	Outside diameter	mm	1.50	0.94
Twisted pair	Outside diameter	mm		1.88
	Direction of lay	–		Left
	Pitch	mm		20 or less
Lay		–	Twist the wires at an appropriate pitch so the outermost layer is right–twisted, and wrap tape around the outermost layer. Apply a cable separator as required.	
Lay diameter		mm	5.7	
Drain wire	Size	mm^2	0.3	
	Structure	Wires/mm	12/0.18	
	Outside diameter	mm	0.72	
Shield braid	Element wire diameter	mm	0.12	
	Thickness	mm	0.3	
	Braid density	%	70	
	Outside diameter	mm	6.3	

Item		Unit	Specifications	
Sheath	Color	–	Black	
	Standard thickness (The minimum thickness is at least 85% of the standard thickness.)	mm	1.1	
	Outside diameter	mm	8.5Max. 9.0(1)	
Standard length		m	100	
Packing method		–	Bundle	
Electrical performance	Electric resistance (at 20°C) (wire nos.)	Ω/km	39.4(1 to 6)	113(7 to 9)
	Insulation resistance (at 20°C)	MΩ–km	15	
	Dielectric strength (AC)	V/min.	500	
Flame resistance		–	Shall pass flame resistance test VW–1SC of UL standards,	

NOTE
The maximum outside diameter applies to portions other than the drain wire.

(b) Cable structure
The cable structure is shown below.

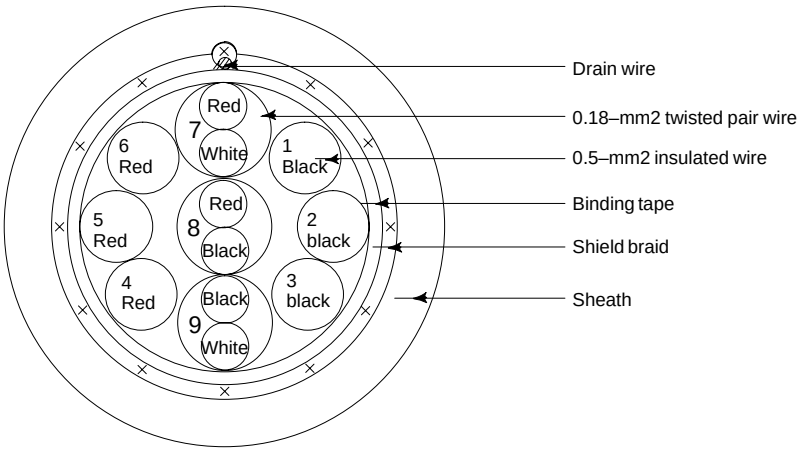

The colors in the figure indicate the colors of insulators.

(c) Specifications

Item		Specification			
FANUC specification number		**A66L–0001–0402**		**A66L–0001–0403**	
Manufacturer		**Oki Electric Cable Co., Ltd.**			
		A–conductor	**B–conductor**	**A–conductor**	**B–conductor**
Conductor	Constitution Number of conductors/mm	16/0.12 (0.18mm^2)	3/22/0.12 (0.75mm^2)	16/0.12 (0.18mm^2)	7/16/0.12 (1.25mm^2)
	Typical outside diameter (mm)	0.55	1.20	0.55	1.70
Insulation (polyester)	Color	White, red, black	Red, black	White, red, black	Red, black
	Typical thickness (mm)	0.16	0.23	0.16	0.25
	Typical outside diameter (mm)	0.87	1.66	0.87	2.20
Pair twisting	Constitution	White–red, white–black, and black–red		White–red, white–black, and black–red	
	Direction of twisting	Left Typical pitch: 20 mm		Left Typical pitch: 20 mm	
Assembling by twisting	Number of strands or conductors	3	6	3	6
	Direction of twisting	Left		Left	
	Taping	Twisting is wrapped with washi, or Japanese paper, tape.		Twisting is wrapped with washi, or Japanese paper, tape.	
	Typical outside diameter (mm)	5.7		6.9	
Braided shielding	Typical strand diameter (mm)	0.14			
	Typical density (mm)	80			
	Drain	A 12/0.18 mm wire is roughly wrapped under braided shielding.			
	Typical outside diameter (mm)	6.4		7.6	
Sheath (polyurethane)	Color	Black (matted)			
	Typical thickness (mm)	1.05		1.1	
	Vertical taping	Vertically taped with washi under sheathing.			
	Outside diameter (mm)	8.5 ± 0.3		9.8 ± 0.3	
Finished assembly	Typical length (m)	100			
	Short size	Basically not approved.			

Item		Specification			
FANUC specification number		A66L–0001–0402		A66L–0001–0403	
Manufacturer		Oki Electric Cable Co., Ltd.			
		A–conductor	B–conductor	A–conductor	B–conductor
Finished assembly performance	Rating	80°C 30V			
	Standard	Shall comply with UL STYLE 20236 and CSA LL43109 AWM I/II A 80°C 30V FT–1.			
	Flame resistance	Shall comply with VW–1 and FT–1.			
Electrical performance	Conductor resistance Ω/km (20°C)	103 or lower	25.5 or lower	103 or lower	15.0 or lower
	Insulation resistance MΩ/km (20°C)	1 or higher			
	Dielectric strength V–min	A. C 500			
Insulation performance	Tensile strength N/mm^2	9.8 or higher			
	Elongation %	100 or higher			
	Tensile strength after aging %	At least 70% of that before aging			
	Elongation after aging %	At least 65% of that before aging			
	Aging condition	For 168 hours at 113°C			
Sheathing performance	Tensile strength N/mm^2	9.8 or higher			
	Elongation %	100 or higher			
	Tensile strength after aging %	At least 70% of that before aging			
	Elongation after aging %	At least 65% of that before aging			
	Aging condition	For 168 hours at 113°C			
Cable cross section	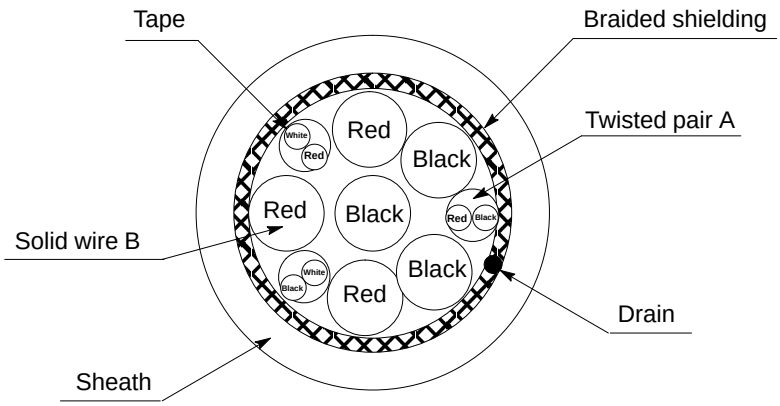				

5–core coaxial cable

(a) List of specifications

Item		Unit	Description
Specification		–	A66L–0001–0371
Manufacture		–	Hitachi Densen
Number of Conductors		–	5
Inside Conductor	Size	mm^2	0.14
	Components	Conduc-tors(PCS)/mm	7/0.16
	Material	–	Tin–coated Soft Copper Wire
	Diamter	mm	0.48
Insulator	Material (Color)	–	Polyethylene (White) Heat–resistant 80°C
	Thickness	mm	0.71
	Diamter	mm	1.90
Outside Conductor	Material	–	Tin–coated Soft Copper Wire (Rolled)
	Diamter of Component–Wire	mm	0.08
	Density	%	95 or more
	Thickness	mm	0.2
Jacket	Material	–	Vinyl Heart–resistant 80°C
	Color	–	Black, White, Red, Green, Blue
	Thickness	mm	0.15
	Diamter	mm	2.6
Twisted Assembly Diameter		mm	7.1
Thickness of Paper Tape		mm	0.05
Shield braiding	Element wire diameter (material)	mm	0.12 (tinned soft copper wire)
	Density	%	80 or more (typ. 82%)
	Thickness	mm	0.3
	Diameter	mm	7.8
Sheath	Material, Color	–	Oil Tight Vinyl (A) Black Heat–resistant 80°C
	Thickness	mm	0.7 (Min. : 0.56)
Finish Diameter		mm	9.2 ± 0.3
Conductor Resistance (20°C)		Ω/km	143 or less
Withstand Voltage (A.C.)		–	1000VAC
Insulation Resistance (20°C)		MΩ–km	1000 or more

Item	Unit	Description
Impedanse (10MHz)	Ω	75±5
Standard Capacitance (1MHz)	nF/km	56
Standard Attenation (10MHz)	dB/km	53
Estimated weight	kg/km	105
Standard Length	m	200
Package form	–	Bundle

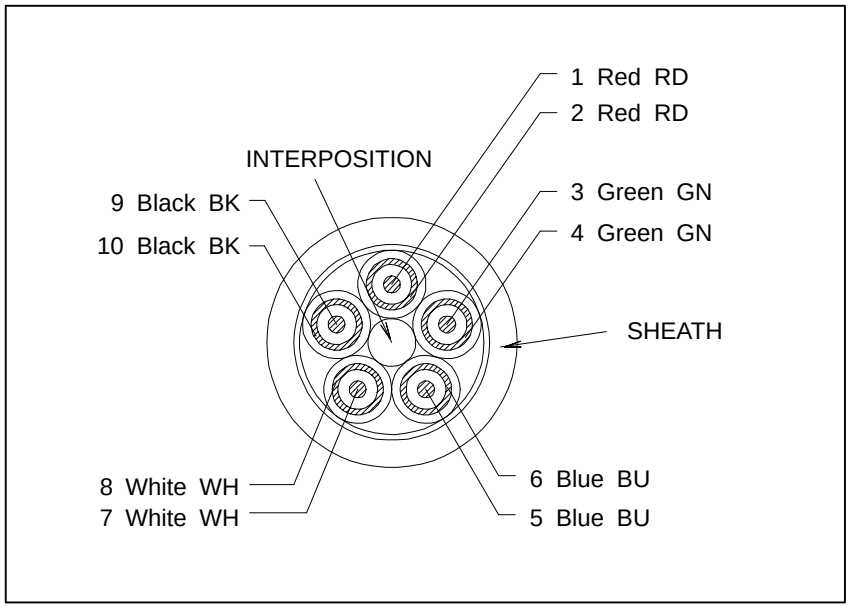

An example of circuit testing 20–pin interface cable

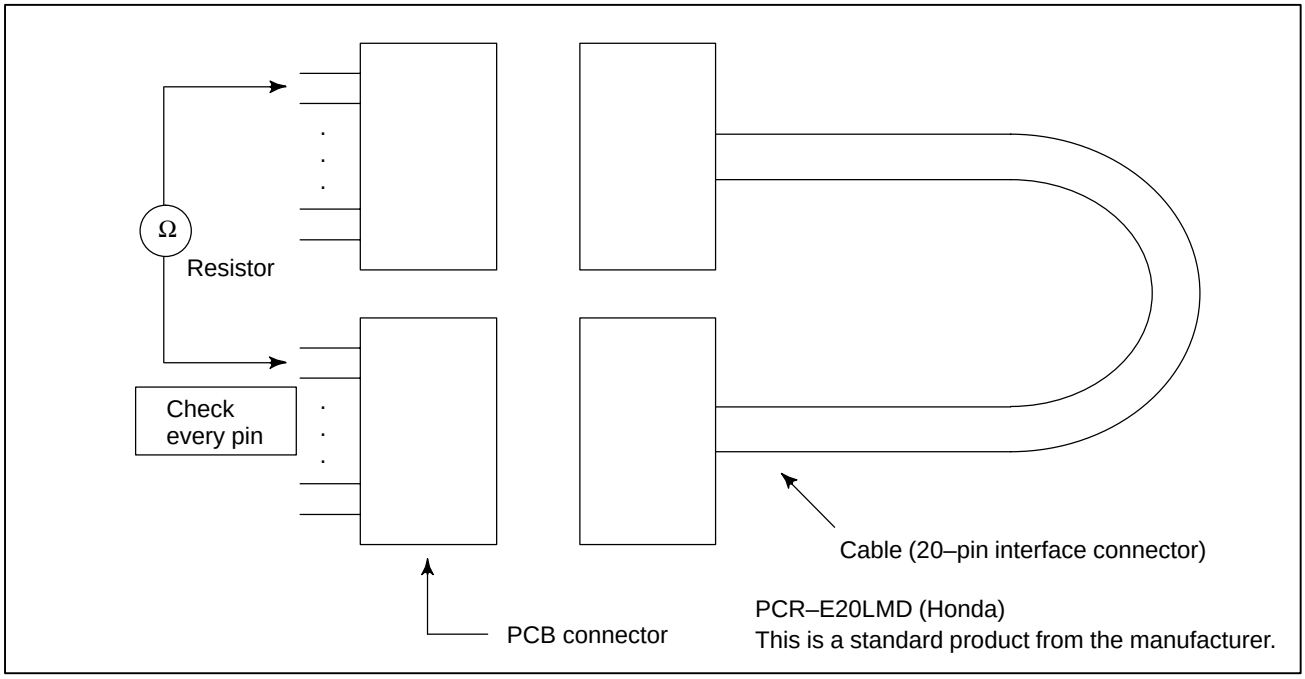

C CONNECTION CABLE (SUPPLIED FROM US)

Maximum allowable cable length between units

Cable type	Use and condition	Maximum cable length (m)
MDI cable	Control unit–to–MDI unit	0.5 m
I/O Link cable	Electrical cable	10 m Note 2
	Electrical–to–optical conversion adapter	2 m
	Optical cable	200 m
Serial spindle cable	Electrical cable (control unit–to–spindle servo unit)	20 m
	Electrical–to–optical conversion adapter	2 m
	Optical cable	200 m
Position coder cable	Control unit position coder	50 m
MPG cable	For manual pulse generator	50 m
FSSB cable	See APPENDIX D.	
HSSB cable	See APPENDIX D.	
RS–232C communication cable	4800 baud or less	100 m
	9600 baud or less	50 m
RS–422 communication cable	9600 baud or less	800 m
	19.2 kbaud	50 m

NOTE

1 The maximum cable lengths listed above apply only when the respective recommended cables stated in the text are used. If a non–recommended cable is used, the maximum cable length may not be guaranteed. Cables other than those listed above are used between units in the CNC. See the respective descriptions in this manual for details of these cables.

2 This cable can be extended to up to 15 m if it is used within the cabinet.

Purpose	Description	Specification	Length
Spindle signal cable Electrical–to–electrical	PCR–E20FA FI–20–CV7	A02B–0236–K845	5 m
Spindle signal cable When an electrical-to-optical conversion adapter is used	PCR–E20FA FI–20–CV7	A02B–0236–K847	1 m
Power supply cable for I/O unit–A Control unit (CP1B) ⇕ I/O Unit–A (CP31)	AMP2–178288–3 SMS3PNS–5	A02B–0236–K843	5 m
MDI signal cable Control unit ⇕ MDI unit (CK1)	FI–20–CV7 LY10–DC20	A02B–0236–K812	25 m
		A02B–0236–K813	45 m
Power supply cable for stand–alone type LCD unit stand–alone type MDI (CPD2) ⇕ Stand–alone type LCD (CP5)	AMP2–178288–3 AMP1–178288–3	A02B–0166–K880	55 m
Manual pulse generator cable (for one unit) Control unit (JA3) ⇕ Manual pulse generator terminal board	FI40–2015S M3 crimp style terminal 1V 1G 1A 1B	A02B–0120–K847	7 m

Purpose	Description	Specification	Length
Manual pulse generator cable (for two units) Control unit (JA3) ⇕ Manual pulse generator terminal board	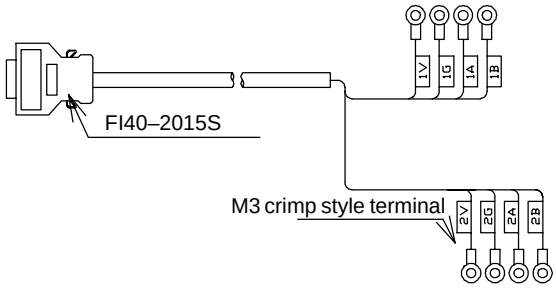	A02B–0120–K848	7 m
Manual pulse generator cable (for three units) Control unit (JA3) ⇕ Manual pulse generator terminal board	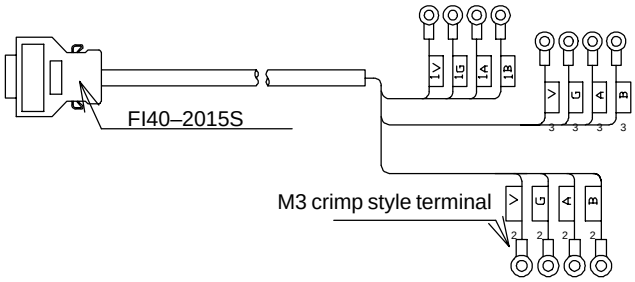	A02B–0120–K841	7 m
I/O Link cable Control unit (JD1A) ⇕ I/O unit (JD1B)	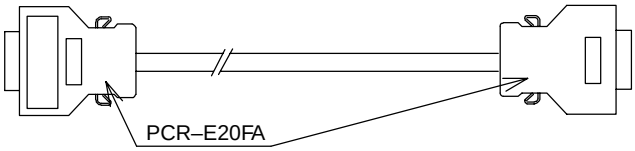	A02B–0120–K842	5 m
Control unit power supply cable Stabilized power supply (24 VDC) ⇕ Control unit (CP1A)	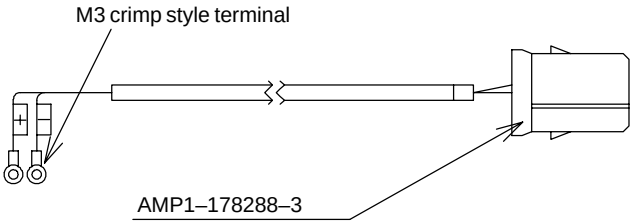	A02B–0124–K830	5 m

D OPTICAL FIBER CABLE

The Series 0*i*/0*i* Mate uses optical fiber cables for the following interfaces. This table lists the usable combinations.

Interface	Recommended optical cable	Maximum allowable transmission distance	Applicable junction adapter	Remark
Serial spindle interface	A66L–6001–0026#L~	100 m	None	
Serial spindle interface	A66L–6001–0029#L~	55 m	A63L–0020–0004	For junction only
I/O Link interface	A66L–6001–0026#L~	200 m	A63L–0020–0002	
High–speed serial bus (HSSB) interface (Note)	A66L–6001–0026#L~	100 m	None	
	A66L–6001–0029#L~	55 m	A63L–0020–0004	For junction only
Serial servo bus (FSSB) interface	A66L–6001–0023#L~	10 m	None	
	A66L–6001–0026#L~	100 m	None	

NOTE

For printed–circuit boards with the following former ordering information, the maximum allowable transmission distance with –0026#L~ is lowered to 50 m, and connection with A63L–0020–0004 is impossible.

·A20B–8001–0580 ·A20B–8001–0581
·A20B–8001–0640 ·A20B–8100–0100

Notes on the specifications of optical fiber cable C

(1) Supported optical fiber cables

(a) Internal cord type cable: A66L–6001–0023#L□R□□□
Cable length: 0.15 to 10 m
Code diameter: 2.2 mm × 2 cords
Tensile strength:
Optical fiber cord 7 kg per cord
Between optical fiber cord and connector 2 kg
Minimum bending radius of optical fiber cord: 25 mm
Operating temperature: –20 to 70°C

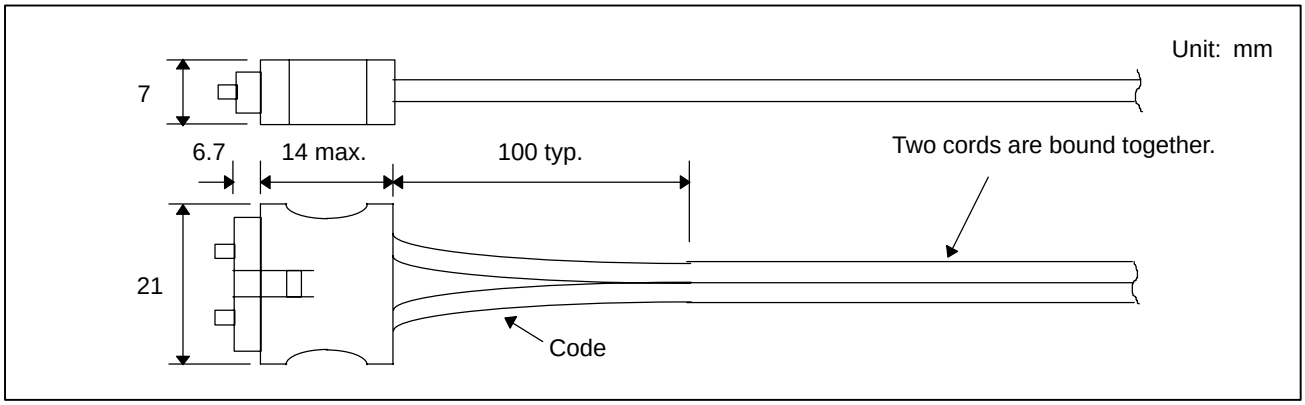

Fig. D (a) External dimensions of internal cord type cable

(b) External type cable: A66L–6001–0026#L□R□□□
A66L–6001–0029#L□R□□□
Cable length: 1 to 200 m
Optical fiber cord diameter: 2.2 mm × 2 cords
Diameter of cable with reinforced cover: 7.6 mm
Tensile strength: Cable with reinforced cover: 75 kg
Optical fiber cord 7 kg per cord
Between optical fiber cord and connector 2 kg
Minimum bending radius of optical fiber cord: 25 mm
Minimum bending radius of cable with reinforced cover: 50 mm
Bending resistance (cable with reinforced cover): 10 million bending cycles at room temperature (when the bending radius is 100 mm)

Flame resistance: Equivalent to UL VW–1
Operating temperature: –20 to 70°C

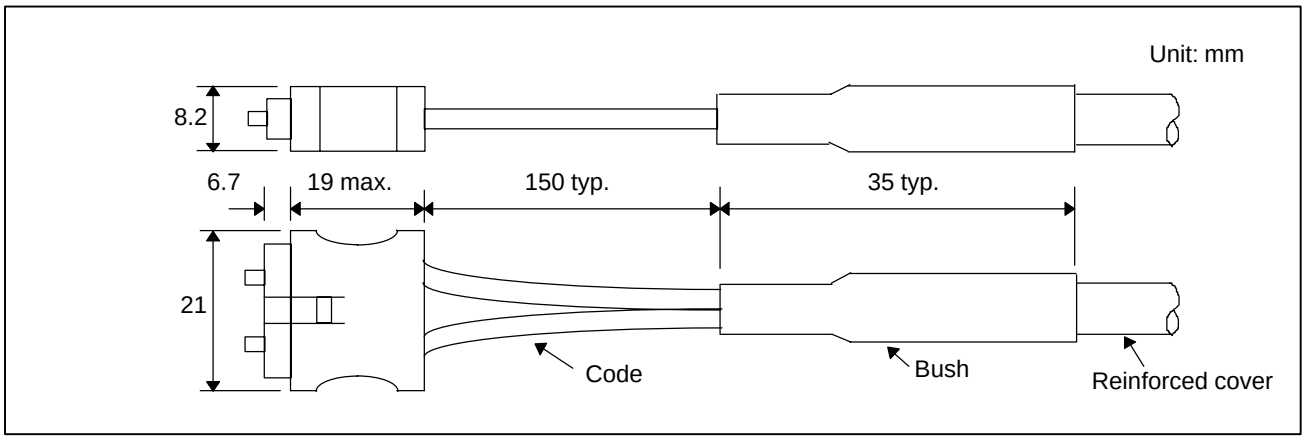

Fig. D (b) External dimensions of external cable

Table D (a) Standard cable length

Internal cord type cable		External cable	
A66L–6001–0023#		A66L–6001–0026#	
Specification	Length	Specification	Length
L150R0	0.15 m	L1R003	1.0 m
L300R0	0.3 m	L2R003	2.0 m
L500R0	0.5 m	L3R003	3.0 m
L1R003	1.0 m	L5R003	5.0 m
L2R003	2.0 m	L7R003	7.0 m
L3R003	3.0 m	L10R03	10.0 m
L5R003	5.0 m	L15R03	15.0 m
L7R003	7.0 m	L20R03	20.0 m
L10R03	10.0 m	L30R03	30.0 m
		L50R03	50.0 m
		L100R03	100.0 m
		L200R03	200.0 m

2. Cable selection
   - Always use an external cable (A66L–6001–0026#～) when the cable is to be laid outside the power magnetics cabinet or main unit cabinet, where it may be pulled, rubbed, or stepped on.
   - Use an external cable when part of the cabling is to be subject to movement. For example, when connecting a portable operation pendant box to the power magnetics cabinet, the use of an external cable is desirable because the cable is likely to be bent, pulled, or twisted repeatedly even though frequent system operation is not expected. However, the force likely to be applied when the cable is installed or moved for maintenance purposes does not need to be taken into consideration.
   - Use an external cable in locations where sparks or flame are a danger. Although the internal cord type cable (A66L–6001–0023#～) is covered by nonflammable resin, the cover, if exposed to frame for a long time, may melt, allowing the fiber cable inside to burn.
   - Use an external cable when the cable is expected to be pulled with considerable force during installation (the force applied to the cable must be within the specified tensile strength limit at all times). For example, even though installing a cable in a cable duct can be regarded as internal cabling, a cable of the appropriate type must be selected according to the tensile force to be applied to the cable during installation.
   - Both the internal cord type and external cables have the same oil and heat resistance properties.

3. Procuring the cable
   All the optical fiber cables mentioned above are special cable products with optical connectors, which are designed, produced, and tested to ensure the required system performance and reliability. It is technically impossible for users to produce these cables or process (cut and reconnect) them after purchase. Users are requested to purchase cables of the necessary length from an appropriate supplier. Cables are available from either FANUC or any of the FANUC–approved manufacturers listed in Table D (b).

Table D (b) FANUC–approved cable manufacturers and cable model numbers (retail)

(1) Internal cord type cable A66L–6001–0023#L□R□□□

Manufacturer	Model number	Remarks
Japan AMP, Co., Ltd.	∗–353373–∗	
Japan Aviation Electronics Industry, Ltd.	PF–2HB209–∗∗M–F–1	∗∗ indicates the cable length (m).
Hirose Electric Co., Ltd.	H07–P22–F2VCFA–∗∗	∗∗ indicates the cable length (m).

(2) External Cable A66L–6001–0026#L□R□□□

Manufacturer	Model number	Remarks
Japan AMP, Co., Ltd.	∗–353199–∗	
Japan Aviation Electronics Industry, Ltd.	CF–2HB208–∗∗M–F–1	∗∗ indicates the cable length (m).
Hirose Electric Co., Ltd.	H07–P22–F2NCFA–∗∗	∗∗ indicates the cable length (m).
Oki Electric Cable Co., Ltd.	OPC201HPXF–∗∗MB	∗∗ indicates the cable length (m).

4. Handling precautions
   (1) Protection during storage
   When the electrical/optical conversion module mounted on the printed circuit board and the optical fiber cable are not in use, their mating surfaces must be protected with the lid and caps with which they are supplied. If left uncovered, the mating surfaces are likely to become dirty, possibly resulting in a poor cable connection.

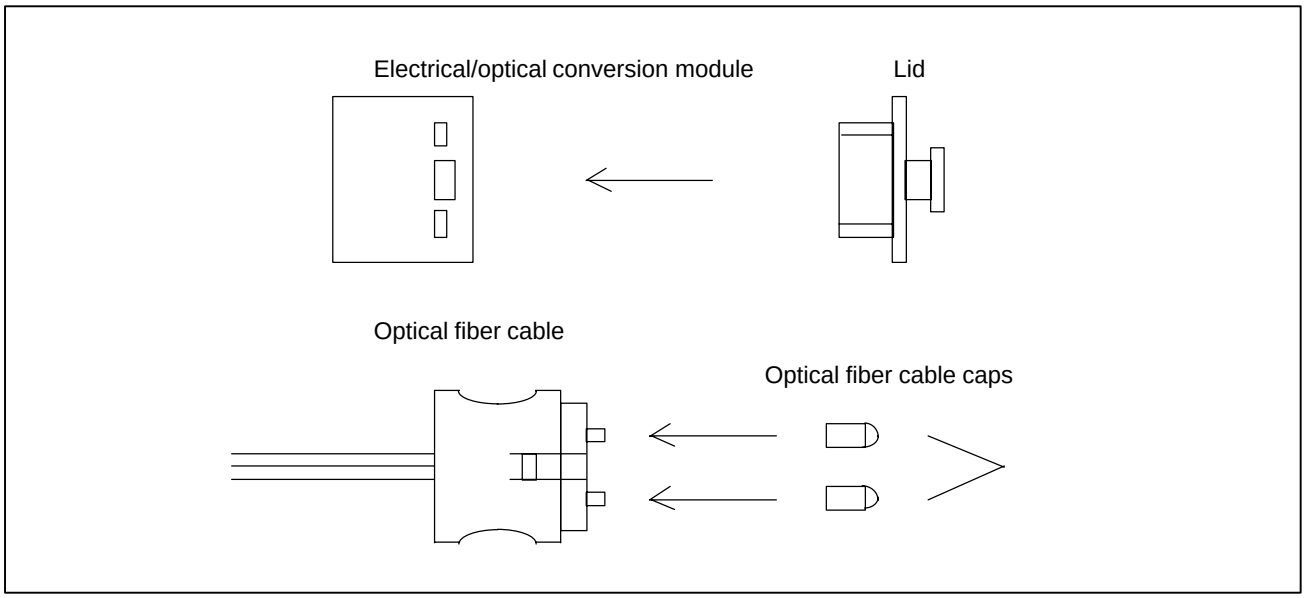

Fig. D (c) Protection of electrical/optical conversion module and optical fiber cable (when not in use)

(2) Optical fiber cable

- Make sure that the bending radius and tensile strength of the cable are always within their ranges described in the specifications (see the first item), regardless of whether the cable is stored or routed and whether operation is in progress or not.
- Although the reinforcing cover of the external cable has sufficient mechanical strength, be careful not to drop heavy objects on the cable.
- Grasp the optical connector firmly when connecting or disconnecting the cable. Do not pull on the optical fiber cord itself. (The maximum tensile strength between the fiber cord and connector is 2 kg. Applying greater force to the cord is likely to cause the connector to come off, making the cable unusable.)
- Once connected, the optical connector is automatically locked by the lock levers on its top. To remove the connector, release the lock levers and pull the connector.
- Although optical connectors cannot be connected in other than the correct orientation, always take note of the connector's orientation before making the connection.
- Before installing an external cable, fix either a wire with a hook or a tension member to the reinforcing cover of the optical connector and pull the wire or tension member, as shown in Fig. D (d). This is done to prevent a tensile force from being applied between the fiber cord and connector. If no tensile force is applied between the fiber cord and connector when installing the cable, you can hold the reinforcing cover of the connector directly and pull it. In the case of an internal cord, which does not have a reinforcing cover, apply the same protective measures, as instructed in Fig. D (d), for that portion of the cable where the two cords are bound together, in order to prevent a tensile force from being applied between the fiber cord and connector. In the same way as for an external cable, if no tensile force is applied between the fiber cord and connector during installation, you can hold the shielded part of the cable directly and

pull it. Because the combined tensile strength of the two cords is only 14 kg, however, avoid applying too great a force to the cable during installation, regardless of whether you have taken the protective measures.

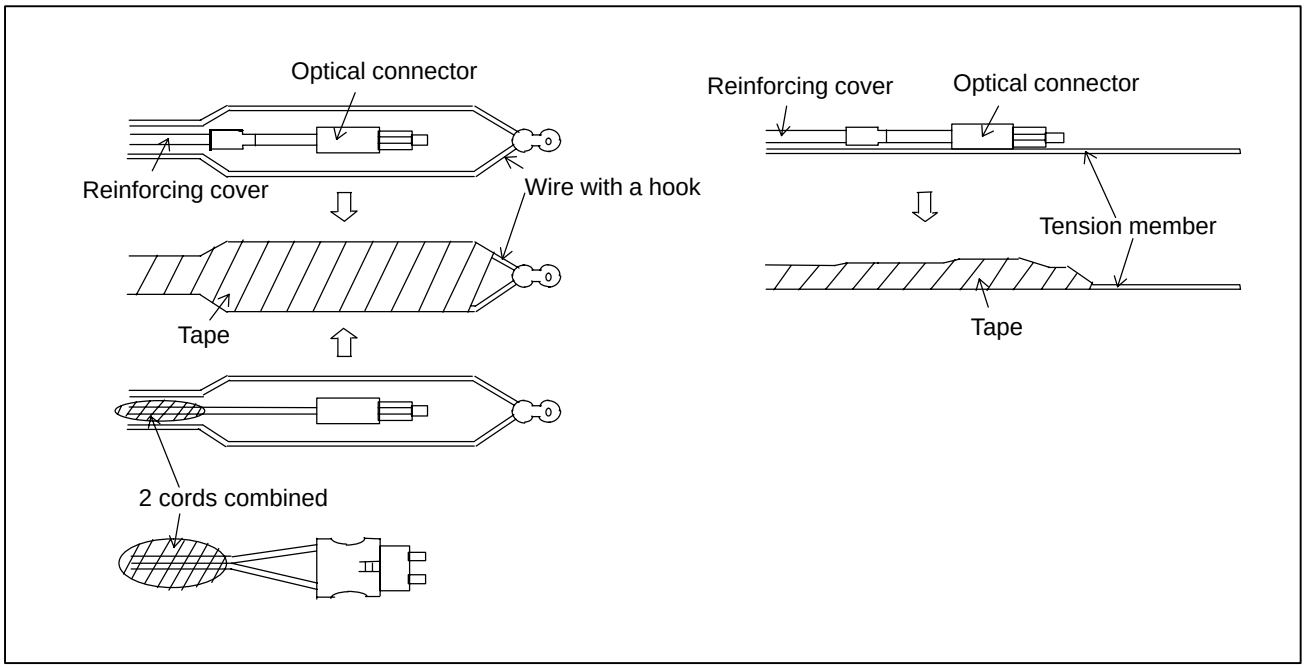

Fig. D (d) Prior to installing a cable

- Take care to keep both parts of the optical connector (cable side and PCB side) clean. If they become dirty, wipe them with tissue paper or absorbent cotton to remove dirt. The tissue paper or absorbent cotton may be moistened with ethyl alcohol. Do not use any organic solvent other than ethyl alcohol.
- Fix the reinforcing cover of the external cable or the cord binding portion of the internal cord type cable by using a cable clamp, as shown in Fig. D (e), to prevent the weight of the optical fiber cable from being applied directly to the connecting part of the optical connector.

  (Recommended cable clamp):

  Recommended cable clamps are listed below. Use a clamp that grasps the optical cable lightly; the clamp should not apply excessive pressure to the cable.

  For an external cable:

  CKN–13SP (with sponge)(Kitagawa Industry Co., Ltd.)

  For an internal cord type cable:

  MN–1 (Kitagawa Industry Co., Ltd.)

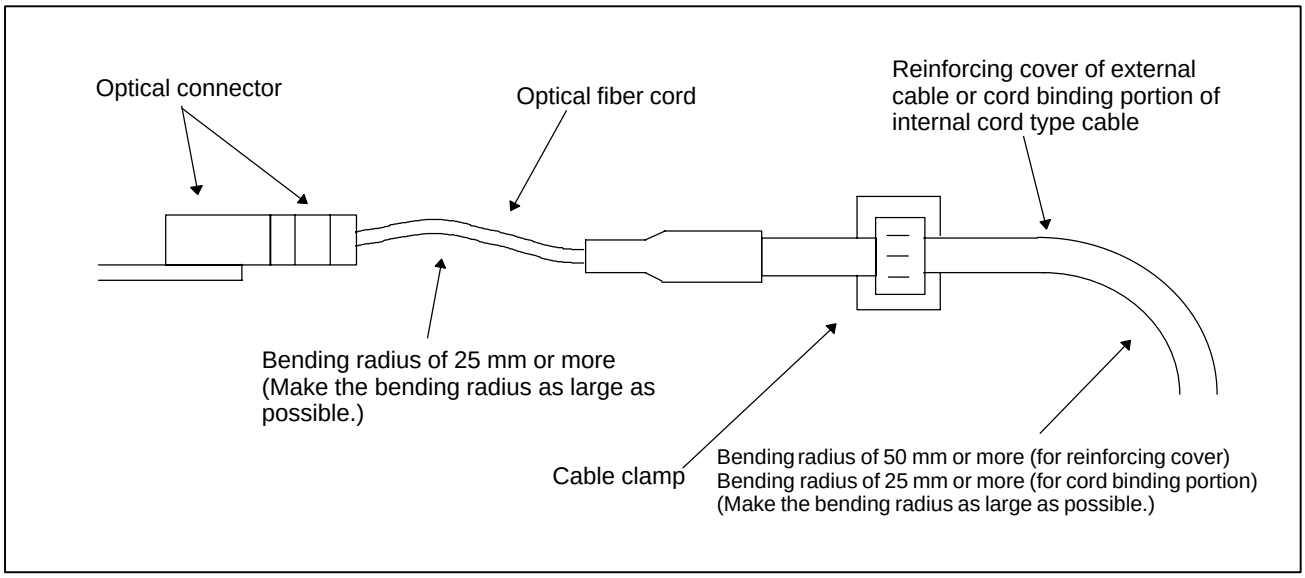

Fig. D (e) Fixing the cable with a clamp

- Any superfluous portion of the cable may be wound into a loops. Should this prove necessary, make sure the diameter of each loop is at least 150 mm (for an external cable) or at least 100 mm (for an internal cord type cable). Winding the cable into smaller loops may produce sharp curves that exceed the specified bending radius limit without the user being aware. Such bending can result in a greater transmission loss, ultimately leading to a communication failure.
- When using a nylon band (cable tie) as a cable clamp, follow the instructions given below. Also, take care not to apply a bending force to one particular part of the cable when fixing it with a clamp. Failing to clamp the cable correctly may cut or damage it.

  External cable:
  Do not clamp the uncovered portion of the cable with a nylon band. When clamping the cable by the reinforcing cover, the clamping force is not an important factor to consider. However, ensure that the clamping force is as small as possible to ensure that the reinforcing cover is not deformed by the clamping. If possible, the clamping force should be 5 kg or less.
  Internal cord type cable:
  Lightly clamp the optical cable with a nylon band so that the cable shield is not deformed. If possible, the clamping force should be 1 or 2 kg (make sure that no force is applied to the cable). Due care is required when clamping the internal cord type cable because its cable shield is weaker than the reinforcing cover of the external cable.

5. Optical fiber cable relay
   When used for the FANUC I/O Link application, optical fiber cables can be connected by using an optical fiber adapter, as follows.

(a) External view of an optical fiber adapter

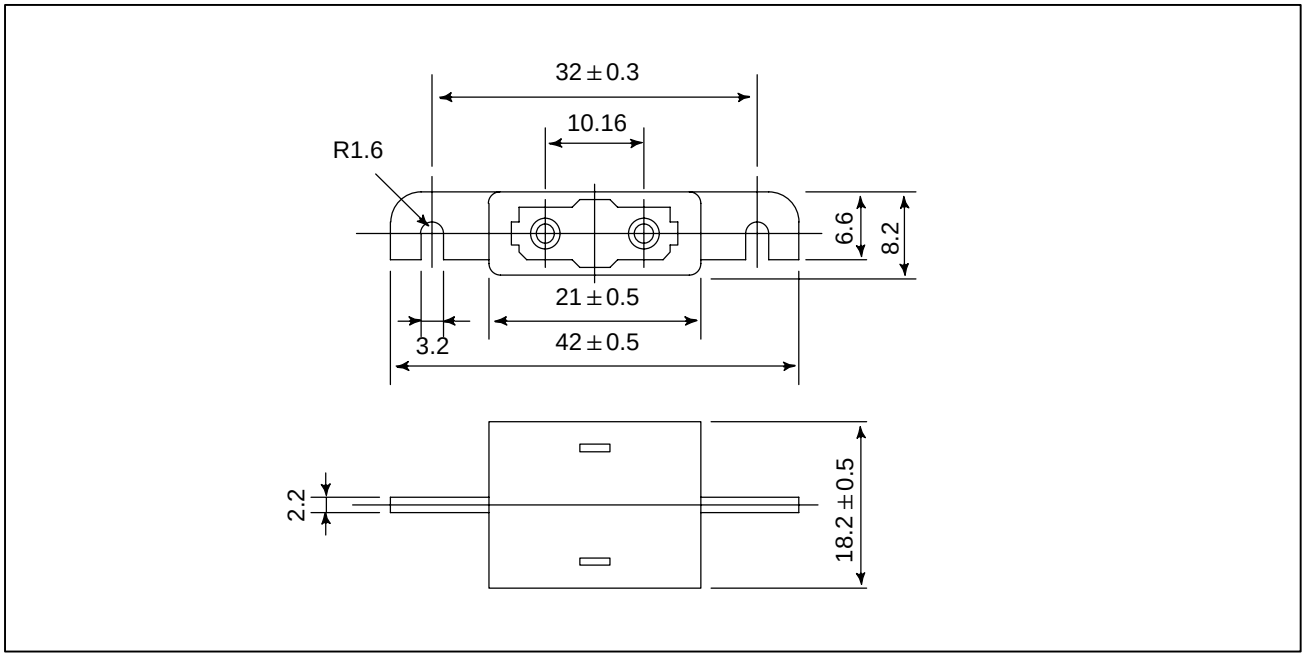

(b) Example of the use of an optical fiber adapter

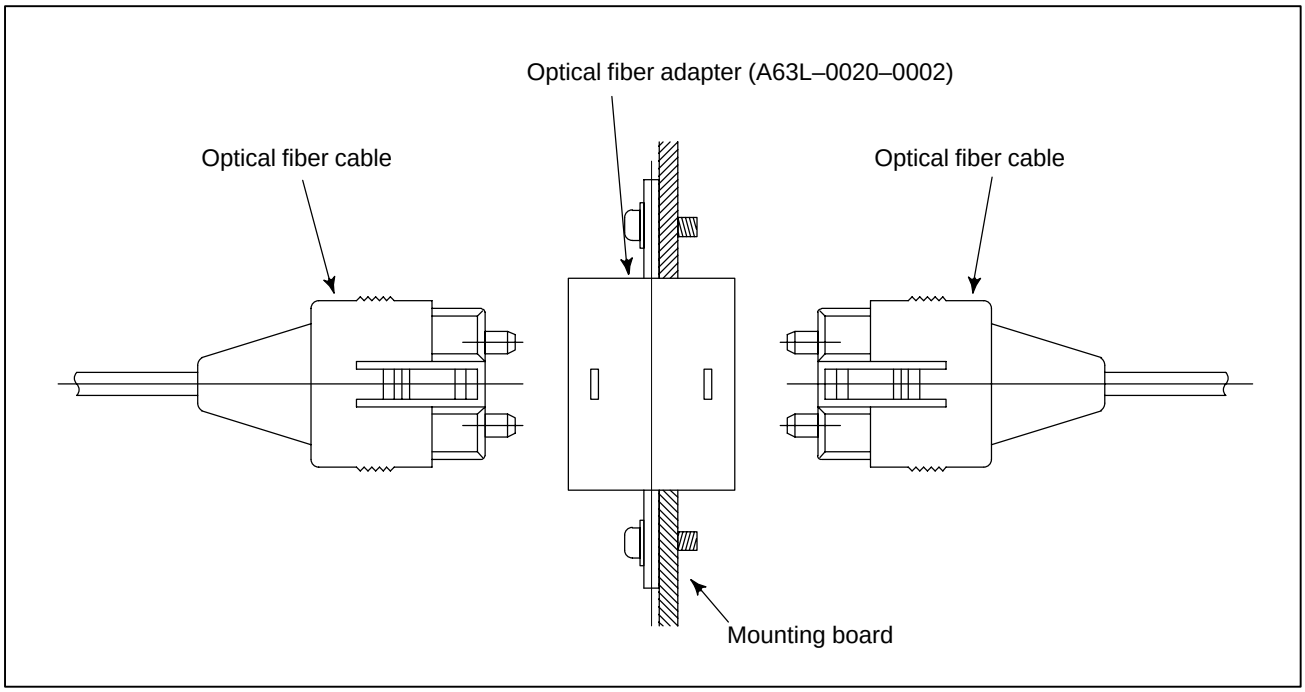

NOTE
Up to one relay points are permitte.

6. Optical fiber cable relay of FANUC high–speed serial bus
   With the FANUC high–speed serial bus, special low–loss optical cables can be connected by using a special low–loss optical relay adapter as an optical fiber relay adapter.

(a) External view of the low–loss optical relay adapter

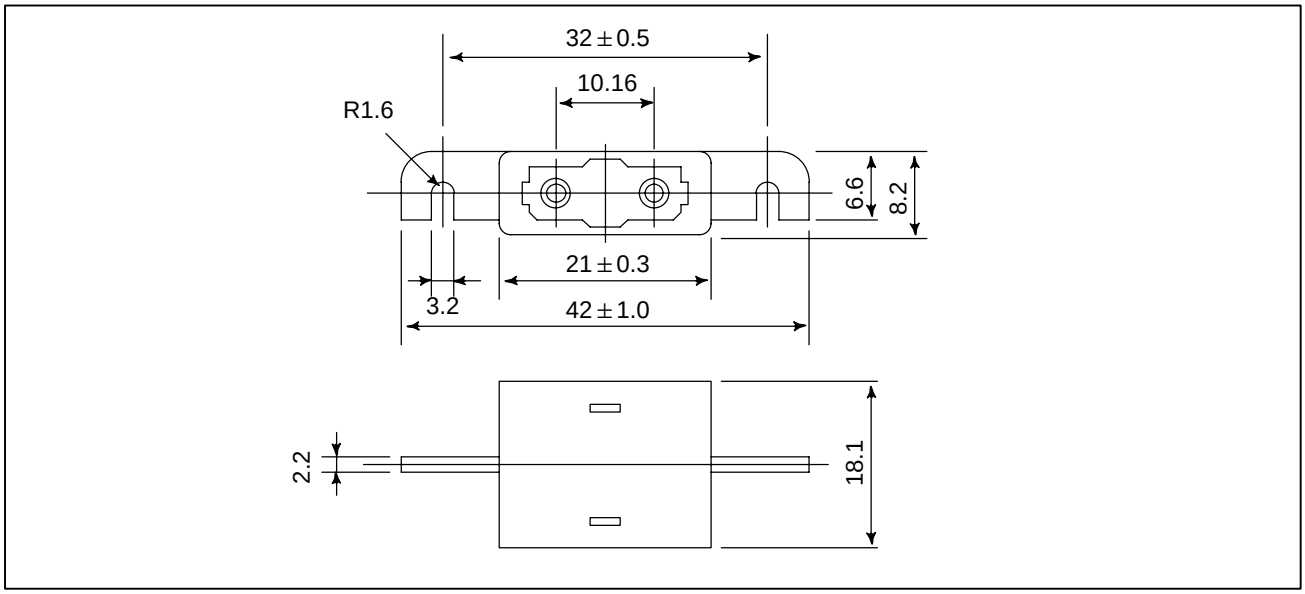

(b) Example of use of the optical fiber relay adapter

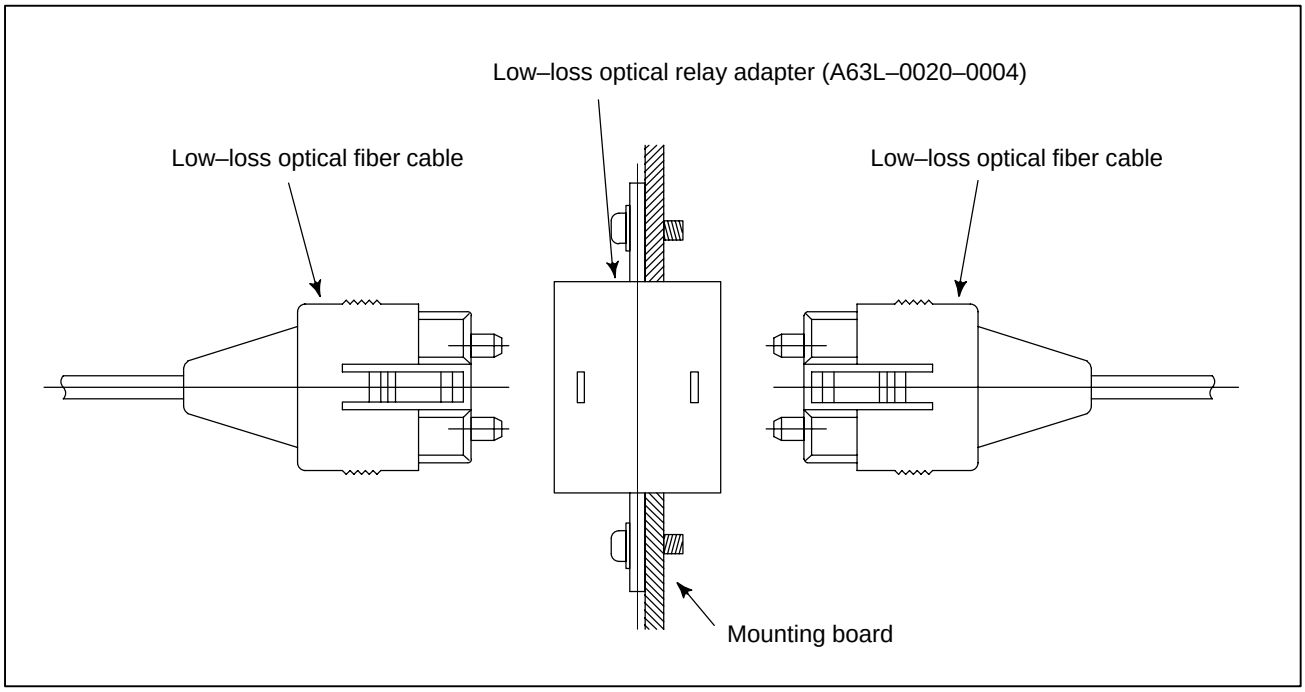

NOTE
Only one relay point is permitted.

7. Precautions for connection with low–loss optical junction adapter

- Features of and handling precautions for low–loss optical junction adapter (A63L–0020–0004)
  When optical connectors for a conventional optical junction adapter (A63L–0020–0002) are jointed, the facing ferrules(Note 1) are located about 60 um from each other. This is because the optical fiber of conventional PCF (plastic clad silica fiber) cables (A66L–6001–0008, –0009, –0026) may protrude from the tip of the ferrules (by up to about several um), resulting in the fiber protrusion being damaged when the ferrules are butted against each other.
  In the low–loss optical junction adapter, the ferrules are butted against each other, thus greatly reducing the reduction in repeater loss. Therefore, the two optical cables used with the low–loss optical junction adapters must be dedicated to the adapters.
  If a conventional PCF (plastic clad silica fiber) cable (A66L–6001–0008, –0009, –0026) is used as even one of the two optical fiber cables for joining the low–loss optical junction adapter, both cables may be damaged, resulting in deteriorated characteristics.

NOTE
Ferrule: Movable metal at the tip of an optical connector; the fiber is bonded to the ferrule.

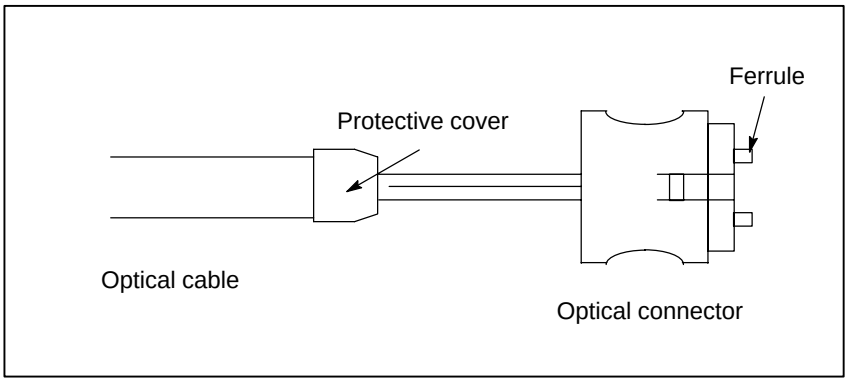

- Features of low–loss optical cable (A66L–6001–0029～)
  A low–loss optical cable is selected from conventional PCF optical cables (A66L–6601–0026). The selected cable offers low loss, and its connector section is given special treatment; the fiber ends are provided with a depression so that the ferrules can be butted against each other. The two optical cables used with the low-loss optical junction adapter must be of low–loss type.
- Appearance of the low–loss optical junction adapter and cable (how to distinguish them from conventional types)
  The body of the conventional optical junction adapter is black, but that of the low–loss optical junction adapter is blue. In addition, the protective cover(Note 1) of the conventional PCF optical cable is black, but that of the low–loss optical cable is blue.

8. Installing the optical fiber junction adapter
   The optical fiber junction adapter should be installed within a cabinet, as a rule. If it is impossible to avoid installing it within a cabinet, protect the adapter and the optical cable portions (such as connectors and cords) not covered with reinforcement coating from the outside air by, for example, covering them with packing.

9. Environmental resistance of the optical fiber junction adapter
   - The optical fiber junction adapter is not waterproof. Even when optical cables are attached to both ends of the adapter, there are very small gaps in the linked portions, so water resistance can not be expected.
   - When optical cables are attached to both ends of the junction adapter installed in a normal environment (such as within a cabinet), it is unlikely that dust will penetrate between the adapter and optical fiber to the degree that it may hamper normal optical linkage. If one or both ends of the adapter are left open, dust and dirt may accumulate even when the adapter is in a normal environment (such as within a cabinet). The dust and dirt on the adapter ends is likely to hamper normal optical linkage when the optical cables are attached. In such a case, clean the junction adapter and the optical connector using the optical fiber junction adapter cleaning method described below.
   - Do not allow cutting fluid to splash over the adapter or those optical cable portions (such as connectors and cords) that are not covered with reinforcement coating. If the inside of the adapter and fiber end surfaces are contaminated with cutting fluid, a malfunction may occur.

10. Cleaning
    If the optical fiber junction adapter, optical–to–electrical conversion module, or optical cable are soiled, clean them according to the following procedures.
    - Cleaning the optical fiber junction adapter and optical-to-electrical conversion module
      First, clean the entire housing by wiping it with a cloth moistened with, or by washing it in, ethyl alcohol or HCFC141B (alternative CFC; High Shower spray can DS–2168, manufactured by Sun Hayato). Similarly, wash the two sleeves in the adapter or wipe them with a cotton swab or the like.

- Cleaning optical cables
  For the optical cables, it is important to clean the connectors at their ends. Any soiling on the optical fiber end surfaces will hamper optical transmission, resulting in a malfunction. Wipe the optical fiber end surfaces (that is, the ferrule end surfaces) thoroughly with a soft, clean cloth (like gauze) moistened with ethyl alcohol or HCFC141B, in the same way as described above. The use of cotton swabs may prove convenient. The fiber end surfaces of low–loss optical cables are lower than the ferrules. To remove any soiling from the fiber end surfaces completely, push the cotton swab or gauze into the depressions all the way through while rotating the ferrule. If the ferrules and optical connectors are contaminated with oily substances, and they may extend over a cleaned fiber end surface when it is attached to the optical-to-electrical conversion module, it is a good idea to wash them before wiping the optical fiber end surfaces, using the procedure stated above.

E LIQUID CRYSTAL DISPLAY (LCD)

Brightness of the monochrome LCD

When the ambient temperature is low, the brightness of the LCD decreases. (The LCD screen is dark particularly immediately after the power is turned on.) This phenomenon is not a failure but is a property specific to the LCD. When the ambient temperature increases, the LCD screen becomes brighter. The monochrome LCD has a brightness control function. For the method of adjustment, see Section 1.17.

F MEMORY CARD INTERFACE

Overview

Data I/O internal to the CNC can be performed for maintenance through the memory card interface in the control unit. This appendix F describes the memory card interface for data input/output.

ATA CARD

1. Overview

   The flash ATA card incorporates a storage device and controller, it enables data input/output for a personal computer equipped with a PCMCIA interface without using any special PC card writer.

2. Flash ATA card specification

   The Flash ATA card must comply with the following standards and must be of one of the following types. However, it is not guaranteed that all ATA cards that comply with these standards will operate normally in the CNC. See Table F for those ATA cards whose normal operation has been confirmed by FANUC.

   2–1 Card standards

   The ATA card to be used in the CNC must comply with PCMCIA (Personal Computer Memory Card International Association) PC Card standard Release 2.1 and PCMCIA PC Card ATA Release 1.02.

   2–2 Card Shapes

   PCMCIA Type I and Type II

   2–3 Card Operation Mode

   PC–ATA specification

   2–4 Card Operating Voltage

   ATA cards that can operate on 5 V (single voltage power source) and 5 V/3.3 V (automatic switching) can be used in the CNC.

3. Flash ATA cards whose normal operation has been confirmed

   The following table shows that the ATA Flash cards which are confirmed to be worked on the Series 0*i*/0*i* Mate(note 1) by FANUC. (for June, 2003)
   The marks on the table mean bellow.

   Available: The card confirmed to be worked by FANUC

   NG: FANUC does not recommend to use it because it might need much time to write data to the card.

   —: No planning to test

   (Blank): This will be evaluated in the future.

   FANUC does not guarantee that any other cards except for the list work well.

NOTE
The PSMCIA interface on the CNC display unit for with PC functions is not included.

Table F (a) ATA flash card list

Vendor	Specification	Capacity	Purpose		Remarks
			For Data Input/Output	For Data Server	
HITACHI	HB28D096A8H	96MB	○	○	
	HB28D160A8H	160MB	○	○	
	HB28B192A8H	192MB	○	○	
	HB28B320A8H	320MB	○	○	
	HB28B640A8H	640MB	○	○	
	HB28B1000A8H	1GB	○	○	

NOTE
1 If a card other than the above is used, the operation is not guaranteed.
2 The cards for 3.3 V cannot be used.
3 The cards for 5 and 3.3 V (automatic switching) can be used.

In the future, we will recommended compact flash cards because of their availability.
For those that we do not plan to evaluate, use the compact flash cards on the compact flash card list instead.

Table F (b) Compact flash card list

Vendor	Specification	Capacity	Purpose		Remarks
			For Data Input/Output	For Data Server	
SanDisk	SDCFB–64–801	64MB	○	—	
	SDCFB–128–801	128MB	○	○	Note 2
	SDCFB–256–801	256MB	○	○	
	SDCFB–384–801	384MB	○	○	
	SDCFB–512–801	512MB	○	○	
	SDCFB–32–101	32MB	○	—	
	SDCFB–64–101	64MB	○	—	
HITACHI	HB288032C6	32MB	○	—	No production
	HB288064C6	64MB	○	—	No production
	HB28D032C8H	32MB	○	—	
	HH28B064C8H	64MB	○	—	
I·O data	PCCF–32MS	32MB	○	—	No production
	PCCF–48MS	48MB	○	—	No production
	PCCF–64MS	64MB	○	—	No production
	PCCF–H32MS	32MB	○	—	No production
	PCCF–H48MS	48MB	○	—	No production
	PCCF–H64MS	64MB	○	—	No production

NOTE

1 The compact flash card adapters used for operation confirmation are as follows:
Adapter made by SanDisk: SDCF–31
Adapter made by I–O DATA: PCCF–ADP

2 The compact flash card adapter used for operation confirmation is as follows:
Adapter made by SanDisk: SDCF–31–03

4. Miscellaneous

- The flash ATA card uses a quick format.
  If your flash ATA card has not been formatted, do so using a personal computer.
- It is impossible to use ATA cards with the memory card access function of a C executor application.

G PROCEDURE FOR FIXING THE MEMORY CARD

Follow the procedure below to fix the memory card.

1. Inserting the memory card into the fixing bracket

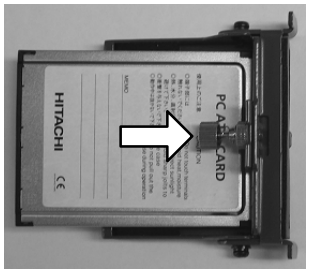

Insert the memory card into the fixing bracket in the direction indicated by the arrow.

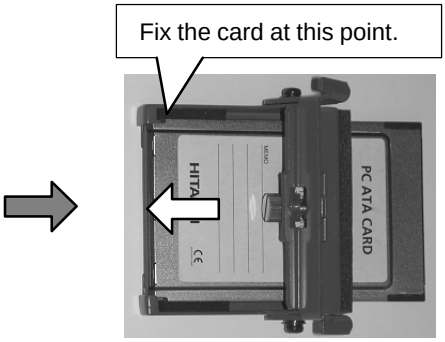

Fix the memory card to the fixing bracket.

2. Inserting the card into the PCMCIA port.

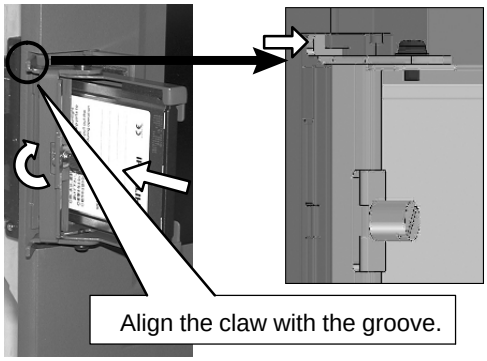

Loosen the screw of the fixing bracket and insert the memory card into the PCMCIA port with the claw of the fixing bracket raised.

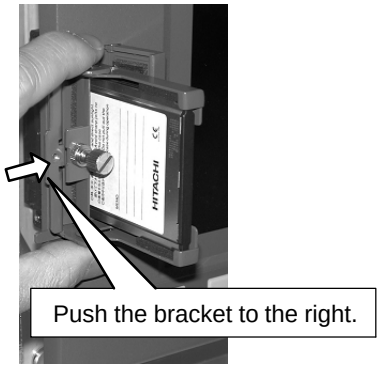

Align the claw of the fixing bracket with the groove of the PCMCIA port and then push the bracket in the direction indicated by the arrow.

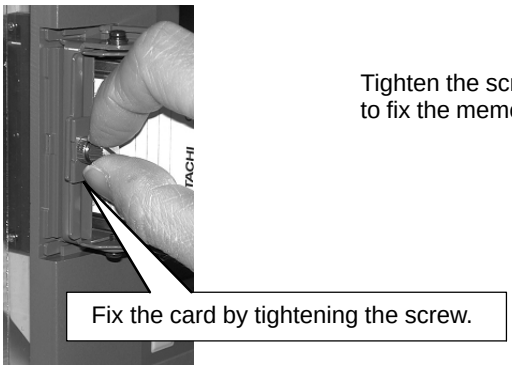

Tighten the screw of the bracket to fix the memory card.

Index

[Numbers]

20–pin Interface Connectors and Cables, 311
2A DO (Output Signal) Connection, 184
2A Output Connector Pin Allocation, 183
2A Output DO Signal Specifications, 185

[A]

Action Against Noise, 22
Address Assignment by Ladder, 253
Analog Input Connector Pin Allocation, 186
Analog Input Signal Connections, 187
Analog Input Signal Specifications, 189
Analog Input Specifications, 190
Analog Spindle Interface, 76

[B]

Batteries, 46
Battery for Absolute Pulse Coder Built into the Motor (6VDC), 51
Battery for Memory Backup (3VDC), 46
Battery for Separate Absolute Pulse Coders (6VDC), 50
Board–mounted Connectors, 312

[C]

Cable Clamp and Shield Processing, 27
Cable Connectors, 313
Cable for Power Supply to Control Unit, 45, 108
Cable Length for Manual Pulse Generator, 193
Cabling Diagram, 35
Configuration, 1, 173
Configurations of Control Units, 2
Connecting DI/DO, 111
Connecting I/O Devices, 57
Connecting the FANUC Servo Unit β Series with I/O Link, 251
Connecting the Ground Terminal of the Control Unit, 25
Connecting the High–speed Skip (HDI), 70
Connecting the Manual Pulse Generator, 125
Connection, 99, 252
Connection Cable (Supplied from Us), 326
Connection Diagram, 174, 259
Connection of Basic and Expansion Modules, 194
Connection of Battery for Separate Absolute Detector, 91
Connection of Connector Panel I/O Module, 173
Connection of Each Section, 155
Connection of FANUC I/O Link by Electric Cable, 104
Connection of I/O Link Slave Devices, 105
Connection of I/O Units for 0*i*, 106
Connection of MDI Unit, 53
Connection of One to Two Serial Spindles, 74
Connection of Operator’s Panel I/O Module (for Matrix Input), 206
Connection of Operator’s Panel I/O Module and Power Magnetics Cabinet I/O Module, 224
Connection of Power Supply, 83
Connection of Source Output Type Connection Unit, 241
Connection to CNC Peripherals, 52
Connection to FANUC I/O Link, 97
Connection to Machine Operator’s Panel, 129
Connection to other Networks, 269
Connection to the High–speed Skip (HDI), 71
Connection to the Servo Amplifiers, 79
Connection to the Small Machine Operator’s Panel, 154
Connection with Input/Output Devices, 56
Connections, 131
Connector (on the cable side) specifications, 141
Connector Layout of the Small Machine Operator’s Panel, 167
Connector Locations, 93
Connector Locations of Main Panel B, 144
Connector Pin Arrangement, 110
Connector Pin Layout for Source Output Type Connection Unit, 247
Control Unit, 32
Control Unit Configuration and Component Names, 2
Cooling by Heat Exchanger, 18
Customization of the key sheet, 171

[D]

Design and Installation Conditions of the Machine Tool Magnetic Cabinet, 16
Detachable key top, 150
DI (General–purpose Input Signal) Connection, 209, 228

DI (Input Signal) Connection, 178
DI (Matrix Input Signal) Connection, 211
DI Signal Connection (Rotary Switch Connection), 160
DI/DO Connector Pin Arrangement, 208, 227
DI/DO Connector Pin Assignment, 177
DI/DO Signal Specifications, 181
Dimensions of Source Output Type Connection Unit, 250
Distribution I/O Setting, 203
DNC2 Interface (RS–232–C), 268
DO (Output Signal) Connection, 180, 212, 232
Dustproof Measures for Cabinets and Pendant Boxes, 35

[E]

Emergency Stop Signal, 254
Emergency stop signal connection, 135
Emergency stop switch, 156
Environment for Installation, 14
Environmental requirement, 145, 168
Environmental Requirements Outside the Control Unit, 14
External 24 VDC Power Supply and Circuit Configurations, 39
External Dimensions, 163
External Dimensions of Each Unit, 273
External View, 216, 234

[F]

FANUC DNC2 Interface, 266
FANUC Handy File Connection, 69

[G]

General–purpose DI connection, 136
General–purpose DI signal definition, 147
General–purpose DO signal, 138
General–purpose DO signal definition, 147
Ground, 24

[H]

Handling Precautions, 264
Hardware Overview, 7
Heat Output of Each Unit, 19
High–speed Serial Bus (HSSB), 257

[I]

I/O Address, 142, 161
I/O Address Allocation, 163
I/O Link connection, 156
I/O link connection, 134
I/O Mapping, 144
I/O Signal Requirements and External Power Supply for DO, 121
Input Signal Requirements (Parallel Interface), 89
Input Signal Rules for the High–speed Skip (HDI), 72
Input Signal Specifications for Source Output Type Connection Unit, 242
Installation, 13, 94
Installation Environment, 261
Installation of the Control Unit, 32
Interface to the Servo Amplifiers, 80

[K]

Key Layout of Separate–type MDI, 53
Key Symbol Indication on Machine Operator’s Panel, 148, 169
Keyboard of main panel, 142
Keyboard of the operator’s panel, 161

[L]

Layout of the key sheet, 165
Linear Scale Interface (Parallel Interface), 84
Liquid Crystal Display (LCD), 341

[M]

Main panel B, B1 specification, 146
Maintenance Parts, 172
Manual Pulse Generator Connection, 192, 215, 234
Manual pulse generator connection, 139, 157
Maximum Number of Units that can be Connected, 253

Meaning of key symbols, 148, 169
Measures Against Surges due to Lightning, 30
Memory Card Interface, 342
Module Installation, 195
Module Specifications, 175

[N]

Noise Suppressor, 26
Notes on Installing a Separate Detector Interface Unit, 95

[O]

Operator's panel specification, 168
Optical Fiber Cable, 329
Order specification, 145, 168
Outline drawing and panel–cut drawing of the small machine operator's panel, 164
Output Signal Specifications for Source Output Type Connection Unit, 243
Overall Connection Diagram, 154, 206, 224
Override signals, 143, 162

[P]

Personal Computer Specification, 260
Pin assignment, 131
Position Coder Interface, 77
Power Connection, 207, 226
Power connection, 155
Power ON/OFF control signal connection, 135
Power Supply Capacities of CNC–related Units, 15
Power Supply Capacity, 15
Power Supply Connection, 36
Power supply connection, 133
Power Supply for the Control Unit, 38
Power Supply Precautions, 104
Power supply specification, 146, 169
Procedure for Fixing the Memory Card, 345
Procedure for Installing Personal Computer Interface Boards, 262
Procedure for Turning Off the Power, 44
Procedure for turning on the power, 43

[R]

Recommended Cables, 265
Recommended Connectors, Applicable Housings, and Cables, 315
RS–232–C Interface Specification, 60
RS–232–C Serial Port, 58

[S]

Separate Detector Interface, 81
Separate Detector Interface Unit Specification, 83
Separate Type Pulse Coder Interface (Parallel Interface), 85
Separating Signal Lines, 22
Serial Spindle, 74
Servo Interface, 78
Specification of Personal Computer in Case that the Interface Board of ISA Type are Used, 260
Specification of Personal Computer in Case that the Interface Board of PCI Type are Used, 260
Specifications, 145, 168, 217, 235
Spindle Connection, 73
Sub panel A, B1 specification, 146

[T]

Temperature Rise within the Cabinet, 18
Thermal Design of Operator's Panel, 20
Thermal Design of the Cabinet, 18
Total Connection Diagram, 130
Total Connection Diagrams, 9
Turning On and Off the Power to the Control Unit, 38

[W]

When a pendant–type manual pulse generator, 140

Revision Record

FANUC Series 0*i*–MODEL C FANUC Series 0*i* Mate–MODEL CONNECTION MANUAL (HARDWARE) (B–64113EN)

01	May, 2004				
Edition	Date	Contents	Edition	Date	Contents