0i TF PLUS | System LED

7-Segment LED Indication (TURNED ON)

LED Display	Meaning
	Power Not Turned on (Power-off state)
	Initialization completed and ready for operation
	CPU started up (BOOT System)
	Initialization of G/A (BOOT System)
	Initialization of various functions
	Task Initialization
	System Configuration parameter check Additional board waiting 2
	Installation of various drivers all files cleared
	Title display System ROM test
	State where the CPU is not started after the power is turned on (BOOT System)
	BOOT system ended, NC system started (BOOT system)
	FROM initialization
	Loading of embedded software
	Loading of software for optional boards
	IPL monitoring in progress
	DRAM test error (BOOT system, NC system)

	BOOT system error (BOOT system)
	File Cleared Optional board waiting 1
	Loading of basic system software (BOOT system)
	FAN motor Check under way (BOOT system)
	Optional board waiting 3, Optional board waiting 4 I/O link waiting (I/O link beta I, Power Mate, etc) Infinite loop of ladder program
	Final system operation check
	Fan motor faulty (BOOT system)
	Indicator initialization (BOOT system)
	FROM initialization (BOOT system) BOOT(NCBOOT 32) of CNC with personal computer being executed
	BOOT monitoring in Progress (BOOT system)

Faulty Regions and Check Items if Processing Stops during Start-up

LED Display	Meaning
	The power supply(24V), backpanel (with power supply)(if the CNC is a LCD-mounted type Control unit),or Power Supply unit (if the CNC is a stand-alone type control unit) may be defective
	Check that the HSSB cable is attached correctly (if the CNC is a stand-alone type control unit)
	The main Board may be Faulty
	Check the alarm LED “CCPUALM” (if the CNC is LCD-Mounted type control unit), the alarm LED “ALM4” (if the CNC is a stand-alone type control unit) on the main board. If the LED noted above is lit: The CPU card May be Faulty
	The main Board may be Faulty
	The CPU card or main board (CPU) may be Faulty
	The FROM /SRAM module or the main board may be faulty

	The CPU card or the FROM/SRAM module may be faulty.
	The main board may be faulty
	The CPU card or Main board (CPU) may be Faulty.
	The Fan motor in the CNC control section may be faulty

7-Segment LED indication (Blinking)

LED Display	# Meaning @ Action
	# ROM parity error @ The FROM/SRAM module may be faulty
	# An FROM file for program memory cannot be created. @ The state of the file for program memory on the FROM is checked with the BOOT system. Rearrange the FROM Check the FROM size
	# Software-detected system alarm @if it is generated during start up: Use BOOT to check the state of the built-in Software in FROM, and Check the size of DRAM In other cases: check the error on the alarm screen and take corrective action
	# The DRAM/SRAM/FROM ID is invalid. (BOOT system, NC system) @ The Main board (CPU) or the FROM /SRAM module may be faulty
	# A servo CPU time out occurred. @ Check the state of servo software on the FROM with the BOOT system.
	# An error occurred when embedded software is incorporated. @ Check the state of embedded software on the FROM with the BOOT system.
	# Hardware-detect system alarm @ check the error on the alarm screen and take corrective action
	# Software for optional boards could not be loaded. @ Check the state of software for optional boards could not be loaded.
	# An error occurred in waiting for an optional board. @the option board or the PMC module may be faulty.
	# The BOOT FROM was updated. (BOOT system) @ Turn on the power again.
	# DRAM test error @ the main board (CPU) may be faulty
	#The ID of the indicator is invalid. @ Check the indicator.
	# The ID of the BASIC system software dose not math that of the hardware. @ Check the Combination of the BASIC system Software and the Hardware

Lay out of the 7-Segment LED and Switches.

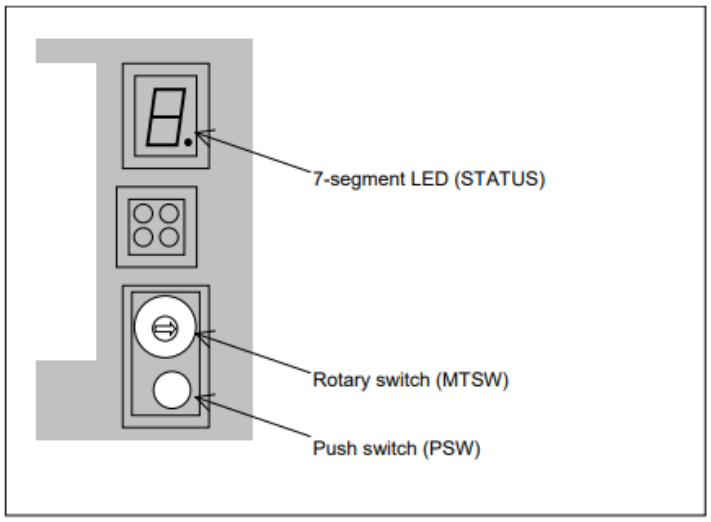

Operations

Function number	Explanation
0	Normal state.
1	Set a display unit number in the Ethernet Display function.
2	Set a node number in the Ethernet Display function.
3	Reserved
4	Checks settings in the Ethernet Display function.
5	Clears all data in memory.
6	Reserved
7	Reserved
8	Saves battery backed-up main board data in a memory card at a time.
9	Reserved
A	Restores battery backed-up main board data from a memory card at a time.
B	Reserved
C	Reserved
D	Reserved
E	Does not wait for the display unit.
F	Performs maintenance work.

Function number 1

This function sets a display unit number in the Ethernet Display function.

(1) Check that number 1 blinks on the LED, and press the push switch.

(2) If the push switch is pressed, the 16 numbers from 0 to F are displayed on the LED in sequence at one second intervals. When the display unit number to be set is displayed on the LED, press the push switch.

0 : Not used.
1 : The HSSB connection display unit or CNC-specific display unit is set.
2 to 4 : Not used.
5 : The Ethernet connection display unit is set.
6 to F : Not used.

(3) The selected display unit number blinks on the LED. Press the push switch again.

(4) The selected display unit number is displayed on the LED and saved in the CNC.

Function number 2

This function sets a node number in the Ethernet Display function.

(1) Check that number 2 blinks on the LED, and press the push switch.
(2) If the push switch is pressed, the 16 numbers from 0 to F are displayed on the LED in sequence at one second intervals. When the node number to be set is displayed on the LED, press the push switch.
The node number ranges from 0 to 7.
(3) The selected node number blinks on the LED. Press the push switch again.
(4) The node number is displayed on the LED and the display unit number is saved in the CNC.

Function number 4

This function checks settings in the Ethernet Display function.

(1) Check that number 4 blinks on the LED, and press the push switch.
(2) When the push switch is pressed, 0 and 1 are displayed on the LED alternately at one second intervals. When 0 is displayed, press the push switch.
(3) The selected number 0 blinks on the LED. Press the push switch to stop blinking.
(4) The three numbers from 0 to 2 are displayed in sequence at one second intervals again. When the number to be checked is displayed on the LED, press the push switch.
0 : Not used.
1 : A display unit number is checked.
2 : A node number is checked.
(5) The selected number blinks. Press the push switch to stop blinking.

Function number 5

This function clears all the battery backed-up SRAM data.
The settings of the Ethernet Display function are also cleared and the display unit number and node number are set to 1 and 0, respectively.

(1) Check that number 5 blinks on the LED, and press the push switch.
(2) Number 5 is displayed on the LED. Press the push switch.
(3) Display of the LED changes in the order: "-", "F", and "0".
(4) After all-clear operation terminates normally, the LED display stops changing at number 0.
(5) Turn off the power, return the rotary switch to the original position, and turn on the power again.

⚠ WARNING

1 This operation enables the CNC system to start up solely (initial state). Accordingly, to recover various functional operations, the cleared data needs to be set again.
2 This operation can be performed by those personnel who received the training of maintenance and safety.

Function number 8

This function saves battery backed-up main board data in a memory card at a time. The data saved using this function can be restored at a time by performing the operation for function number A or by using the SRAM DATA UTILITY function of the boot function.

(1) Inset a memory card with enough free space into the memory card slot (MEMORY CARD CNM1B) of the main body.
(2) Check that number 8 blinks on the LED, and press the push switch.
(3) Number 8 is displayed on the LED. Press the push switch.
(4) While data is saved in the memory card, display of the LED is rotating clockwise.
(5) If the data cannot fit in one memory card, number 3 blinks. Replace the memory card with another one, and press the push switch.
(6) If the data cannot be written to the memory card, number 2 blinks on the LED. Replace the memory card with another one and press the push switch.

(7) When the data has been saved normally, number 0 is displayed on the LED. If the data cannot be saved normally, number 1 is displayed on the LED.
(8) If the data cannot be backed up because it is illegal, number 1 blinks on the LED. In this case, it is impossible to save the data at a time. Back up individual data items one by one, then perform all-clear operation.

Function number A

This function restores battery backed-up main board data from a memory card at a time.

(1) Insert the memory card in the memory card slot (MEMORY CARD CNM1B) of the control unit.
(2) Check that A blinks on the LED, and press the push switch.
(3) When letter A is displayed on the LED, press the push switch.
(4) While data is being restored from the memory card, the LED indication turns counterclockwise.
(5) If the entire data cannot be restored from the single memory card, number 3 blinks. Replace the memory card with the next memory card, and press the push switch.
(6) If the memory card cannot be recognized correctly, number 2 blinks on the LED. Check the memory card status, and press the push switch.
(7) When the data has been restored normally, number 0 is displayed on the LED. If the data cannot be restored normally, number 1 is displayed on the LED.

Function number E

This setting does not wait for the display unit. Use this setting for a configuration without a display unit.

Stand Alone Type LED details

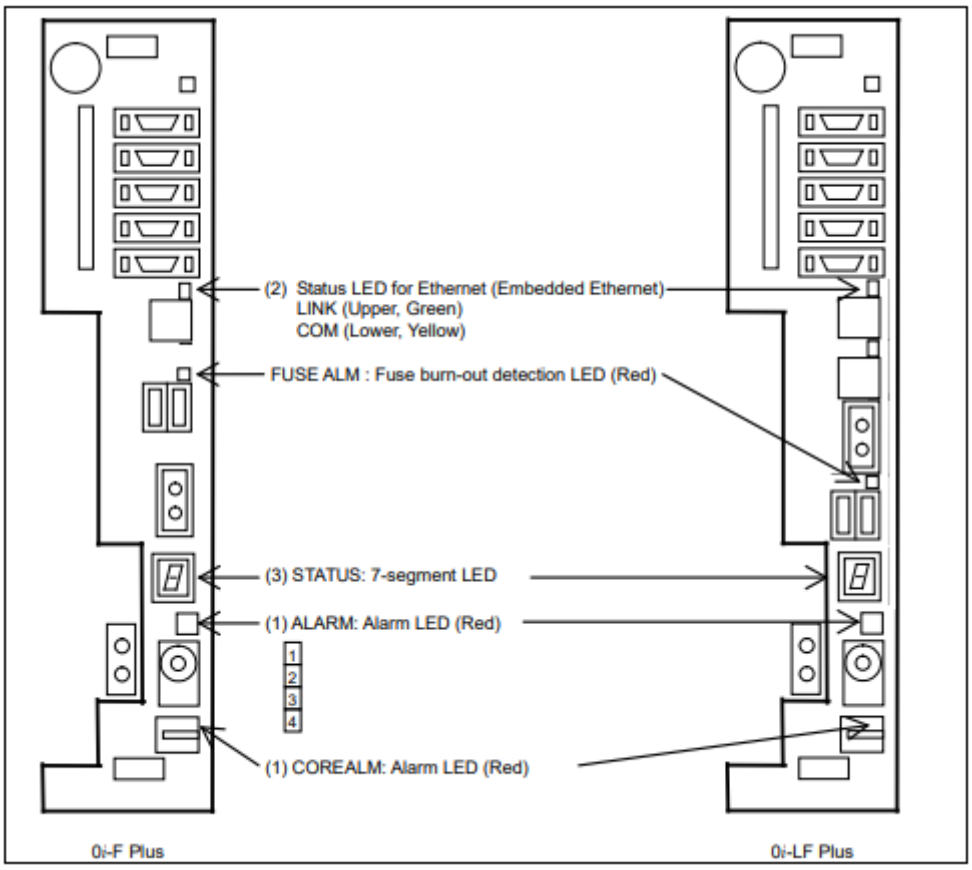

(1) Alarm LED (Red)

ALM 1	ALM 2	ALM 3	ALM 4	CORE ALM	Meaning
□	■	□	◇	◇	Low battery voltage. The battery may be is running out.
■	■	□	◇	◇	Software detected an error and stopped the system.
□	□	■	◇	◇	Hardware detected a failure in the system.
■	□	■	◇	◇	An alarm was issued with the servo card on the main board.
□	■	■	◇	◇	An error was detected in the data of the SRAM on the FROM/SRAM module. The FROM/SRAM module may be faulty, the battery voltage may have dropped, or the main board may be faulty.
■	■	■	◇	◇	Abnormal power supply operation. The cause may be noise or the power supply unit failure.
◇	◇	◇	■	◇	The CPU card may be faulty.
◇	◇	◇	◇	■	Lights if there is an abnormal condition in the power supply on the main board.

■: On □: Off ◇: Don't care

(2) Status LED for Ethernet (Embedded Ethernet)

LED	Meaning
LINK (Green)	Turned on when a connection is made with the hub correctly.
COM (Yellow)	Turned on when data is transferred.

(3) 7-segment LED

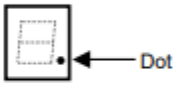

LED	Meaning
Dot	Turned on when the display unit is not connected to connector COP21A. If this LED is turned on when the display unit is connected, it is probable that the optical fiber cable is broken, the display unit is not powered on, or the display unit is faulty.

See Appendix "LED Display" for others.

LCD Mount Type 1, 3, 5 LED Details

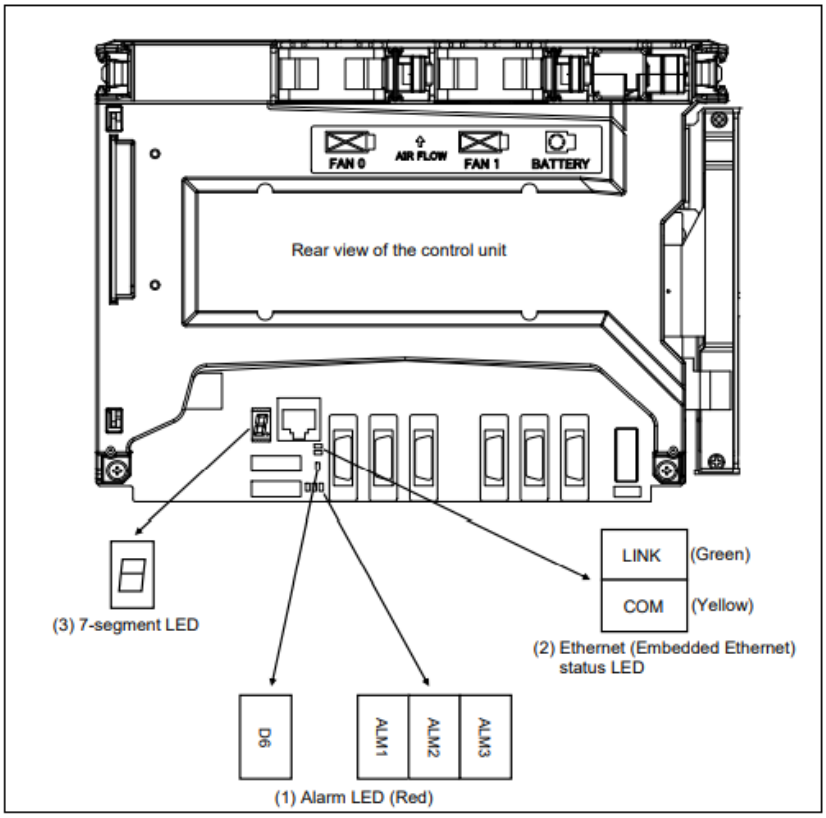

(1) Alarm LED (Red)

CORE ALM	ALM 1	ALM 2	ALM 3	CCPU ALM	Meaning
◇	□	■	□	◇	Low battery voltage. The battery may be is running out.
◇	■	■	□	◇	Software detected an error and stopped the system.
◇	□	□	■	◇	Hardware detected a failure in the system.
◇	■	□	■	◇	An alarm was issued with the servo card on the main board.
◇	□	■	■	◇	An error was detected in the data of the SRAM on the FROM/SRAM module. The FROM/SRAM module may be faulty, the battery voltage may have dropped, or the main board may be faulty.
◇	■	■	■	◇	Abnormal power supply operation. The cause may be noise or the back panel (with power supply) failure.
◇	◇	◇	◇	■	The CPU card may be faulty.
■	◇	◇	◇	◇	Lights if there is an abnormal condition in the power supply on the main board.

■: On □: Off ◇: Don't care

(2) Ethernet (Embedded Ethernet) status LED

LED	Meaning
LINK (Green)	Turned on when a connection is made with the hub correctly.
COM (Yellow)	Turned on when data is transferred.

(3) 7-segment LED
See Appendix "LED Display".

LCD Mount type 0 LED Details

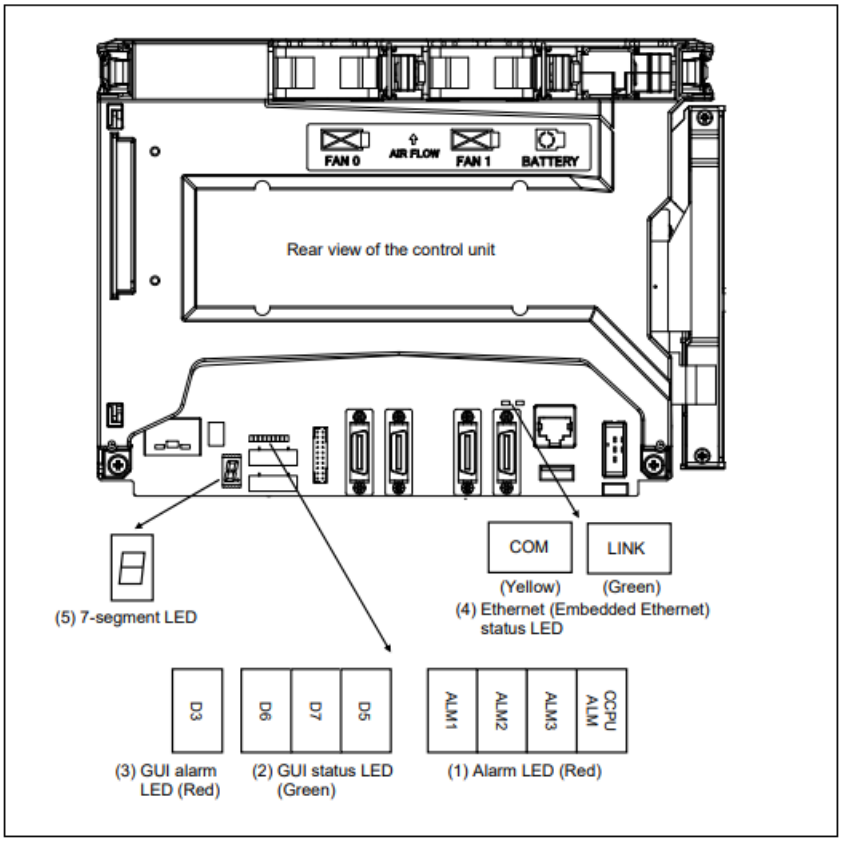

(1) Alarm LED (Red)

ALM 1	ALM 2	ALM 3	CCPU ALM	Meaning
□	■	□	◇	Low battery voltage. The battery may be is running out.
■	■	□	◇	Software detected an error and stopped the system.
□	□	■	◇	Hardware detected a failure in the system.
■	□	■	◇	An alarm was issued with the servo circuit on the main board.
□	■	■	◇	An error was detected in the data of the SRAM on the FROM/SRAM module. The FROM/SRAM module may be faulty, the battery voltage may have dropped, or the main board may be faulty.
■	■	■	◇	Abnormal power supply operation. The cause may be noise or the back panel (with power supply) failure.
◇	◇	◇	■	The Main board may be faulty.
◇	◇	◇	◇	Lights if there is an abnormal condition in the power supply on the main board.

■: On □: Off ◇: Don't care

(2) GUI status LED (Green)

LED			Meaning
D6	D7	D5	
□	□	□	State where the power is not tuned on, or state where the system was started up successfully and is running normally.
■	■	■	State immediately after the power is turned on. If the state remains unchanged: If "CCPUALM" is on: It is likely that the CPU card may be defective. If "CCPUALM" is off: It is likely that the main board or GUI card may be defective.
■	■	□	The NCBoot32 screen is active.
□	■	□	IPL processing is under way.

■: On □: Off

(3) GUI alarm LED (Red)

LED	Meaning
D3	Common RAM error. The main board may be faulty.

(4) Ethernet (Embedded Ethernet) status LED

LED	Meaning
LINK (Green)	Turned on when a connection is made with the hub correctly.
COM (Yellow)	Turned on when data is transferred.

- LED display (GUI Card)

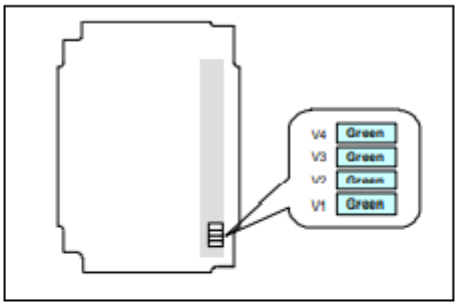

LED				Status	Meaning when LED stops
V4	V3	V2	V1		
□	□	□	□	Power-on	The cause may be GUI card or the main board failure.
■	■	■	□	FROM check	The cause may be the GUI card failure.
■	■	□	□	DRAM check	
■	□	■	□	Display beginning	The cause may be the GUI card or the main board failure.
■	□	□	□	DRAM check	The cause may be the GUI card failure.
□	■	■	□	GUI system loading beginning	The cause may be the GUI card, the compact flash card or the main board failure.
□	■	□	□	GUI system start	

LED				Status	Meaning when LED stops
V4	V3	V2	V1		
□	□	■	□	GUI system operation beginning	The cause may be the GUI card failure.
■	■	■	■	NAND flash driver start	The cause may be the GUI card failure.
■	■	□	■	HSSB driver start	The cause may be the CPU card, the servo card or the main board failure.
■	□	■	■	PCMCIA driver start	The cause may be the main board failure.
■	□	□	■	ETHERNET, SERIAL driver start	The cause may be the GUI card or the main board failure.
□	■	■	■	USB driver start	
□	■	□	■	DISPLAY driver start	
□	□	■	■	Backlight-on	

□	□	□	■	MDI, TOUCH PANEL driver start	The cause may be the GUI card or the main board failure.
□	□	□	☆	FROM error	The cause may be the GUI card or the main board failure.
□	□	☆	☆	DRAM error	
□	☆	□	☆	NAND flash error	The cause may be the GUI card failure.
□	☆	☆	☆	Filesystem error	The cause may be the GUI card failure.
☆	□	□	☆	CNC error	The cause may be the CPU card, the servo card or the main board failure.
☆	☆	☆	□	Normal status	

□: Off, ■: On, ☆: Blinking