Blockchain-Enhanced Secure Communication Framework for Real-Time Internet of Drones (IoD) Video Transmission

Mehdi NAFA, Maya ZENNOUN

Université Badji Mokhtar Annaba — Laboratoire LRS

Abstract

The rapid growth of the Internet of Drones (IoD) and the increasing deployment of real-time video applications for surveillance and reconnaissance have made communication security a critical issue. Traditional architectures remain vulnerable to replay attacks, identity spoofing, and eavesdropping, particularly when no robust and decentralized authentication mechanism is in place.

We propose a secure communication framework built on four complementary components: a mutual authentication protocol based on BAN logic [9], ChaCha20-Poly1305 stream encryption [10], Edge Computing nodes acting as secure relays and DoS filters, and a private Proof-of-Authority (PoA) blockchain for tamper-proof drone identity management.

The system is validated through NS-3 simulations [14] across four scenarios. With N=5 drones: 8.15 Mbps, 118 ms, 0.031% loss. With N=10: 6.10 Mbps, 135 ms, 0.156% loss. A single-Edge configuration with N=20 reaches 76.5% packet loss and 370 ms latency, confirming saturation. A two-Edge multi-Edge architecture restores performance to 6.09 Mbps, 134 ms, 0.18% loss, without modifying any security mechanism.

I. INTRODUCTION

The Internet of Drones (IoD) represents a significant breakthrough in wireless networks. Drones can now capture and transmit real-time information for surveillance, disaster management, package delivery, and military reconnaissance [2], [8]. Live video transmission is the most demanding use case, requiring simultaneously high throughput, low latency, and strong security in an inherently insecure wireless environment.

The openness of radio channels makes drones vulnerable to eavesdropping, replay attacks, man-in-the-middle attacks, and DoS/DDoS flooding [3], [4]. This is further exacerbated by drone operation in isolated areas without direct supervision [1], [8].

In response, Subramani et al. [1] proposed an anonymous authentication scheme combining blockchain and PUFs. Bera et al. [2] proposed an AI and smart contract architecture using PBFT consensus. Mishra et al. [3] designed a framework for beyond-5G networks. Huang et al. [4] introduced BAKAS-UAV. Garcia et al. [5] and Kumar et al. [6] explored broadcast authentication and UAV data security. Nguyen et al. [7] used IoD and blockchain for search and rescue. Harbi et al. [8] provided a comprehensive survey.

Despite these advances, none jointly address real-time video, Edge-level mutual authentication, and quantitative network performance under varying traffic loads. Our main contributions are:

- A three-message mutual authentication protocol (M1–M3) based on BAN logic [9], resisting replay, spoofing, and man-in-the-middle attacks.
- An Edge Computing node combining blockchain-based identity verification with DoS attack filtering.
- DroneRegistry.sol smart contract on a private PoA blockchain via Hardhat Node, ensuring tamper-proof drone identities.
- NS-3 v3.43 simulations [14] across four scenarios (N=5, 10, 20×1-Edge, 20×2-Edges), using 802.11ac, Nakagami fading [11], Random Waypoint [12], AODV [13], over 300 seconds.

The paper is organized as follows. Section II presents related work. Section III describes the system model. Section IV details the authentication protocol. Section V describes the implementation. Section VI presents results. Section VII concludes.

II. RELATED WORK

A. Authentication and Key Management in the IoD

Subramani et al. [1] proposed anonymous authentication using blockchain and PUFs, eliminating on-board key storage. Huang et al. [4] introduced BAKAS-UAV with BAN logic verification, balancing computation and security. Garcia et al. [5] designed μTesla-based broadcast authentication for constrained drone environments. However, none of these works model network performance under variable traffic loads or address real-time video transmission.

B. Blockchain and Smart Contract Frameworks

Bera et al. [2] leveraged Ethereum smart contracts and PBFT consensus for decentralized block validation and AI-based anomaly detection. Mishra et al. [3] proposed SBBDA-IoD, formally verified with Scyther, for beyond-5G drone networks. Kumar et al. [6] addressed data confidentiality for UAV-to-GCS communication. While these works demonstrate the effectiveness of smart contracts, none incorporate an Edge Computing layer for attack filtering.

C. System Architectures and Surveys

Nguyen et al. [7] proposed a decentralized IoD-blockchain architecture for search and rescue, eliminating single points of failure. Harbi et al. [8] identified two critical remaining gaps: absence of realistic network simulation validation and lack of real-time video-specific security mechanisms.

D. Positioning of Our Work

As shown in Table III (Section VI), no existing work simultaneously provides Edge-level mutual authentication, ChaCha20-Poly1305 video encryption [10], DoS filtering at the Edge, and quantitative NS-3-based network validation [14] under varying drone densities. Our framework addresses all four dimensions within a unified architecture.

III. SYSTEM MODEL AND PROPOSED ARCHITECTURE

The system is organized into four hierarchical layers, as illustrated in Figure 1.

A. Layered Architecture

Drone layer (UAV). Each drone captures a video stream in RTP format and encrypts it using ChaCha20-Poly1305 [10] with session key K_DE. The encrypted stream is transmitted over UDP/802.11ac to the Edge node after a three-message mutual authentication.

Edge Computing layer (MEC). The Edge authenticates drones via the blockchain smart contract, generates and refreshes K_DE every 60 seconds, and filters DoS attacks using a DropTail queue. It relays encrypted video to the GCS without decrypting it, preserving end-to-end confidentiality.

Blockchain layer (private PoA). A private PoA network runs DroneRegistry.sol, immutably storing drone identities and public keys. Video traffic never traverses the blockchain; only control and authentication events are logged.

Ground Control Station (GCS). The GCS receives and decrypts the video stream using K_DE, displaying it in real time.

Multi-Edge extension. For N=20, two independent Edge nodes each handle 10 drones on separate Wi-Fi channels, eliminating CSMA/CA contention and restoring QoS without changing any security mechanism.

B. Communication Model and Simulation Parameters

Drones communicate over 802.11ac at 5 GHz. The channel model combines Log-distance path loss with Nakagami fading [11] for realistic aerial propagation. Drone mobility follows the Random Waypoint model [12] at 5–15 m/s. Routing uses AODV [13] over 300-second simulations. Table I summarizes all parameters.

TABLE I: NS-3 Simulation Parameters

Parameter	Value
Wi-Fi standard	802.11ac, 5 GHz
Bandwidth	40/80 MHz (N=5/10,20)
Tx power	20–23 dBm
Channel model	Log-dist. + Nakagami [11]
Mobility	RWP [12], 5–15 m/s
Routing	AODV [13]
Video bitrate	6–8 Mbps / drone
Transport	UDP, 1200-byte pkts
Simulation time	300 s
Blockchain delay	U[50,150] ms (measured)
Drones N	5, 10, 20

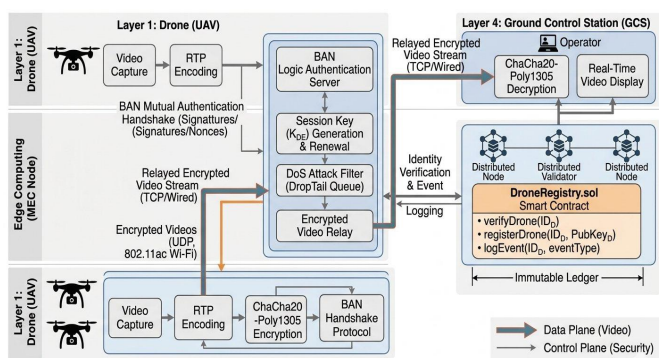

Fig. 1. Proposed System Architecture — Four-Layer IoD Security Framework. Data plane (video) shown in orange arrows; control plane (security/authentication) in grey arrows.

IV. AUTHENTICATION PROTOCOL

A. Protocol Description

The protocol is based on BAN logic [9] and proceeds in three phases.

Phase 0 – Pre-flight registration. The administrator submits register(ID_D, PubKey_D) to DroneRegistry.sol, immutably storing the drone identity on the PoA blockchain.

Phase 1 – Mutual authentication. Three messages are exchanged:

$$M1 : D \rightarrow E : \{ ID_D , N_D \} SigD$$

The nonce N_D ensures freshness and replay resistance [9]. Upon receiving M1, the Edge queries isAuthorized(ID_D) and retrieves PubKey_D, then sends:

$$M2 : E \rightarrow D : \{ ID_E , N_E , N_D , K_DE , \tau \} SigE$$

where τ = { ID_D , ID_E , N_D , T_exp } SigE is the authorization token. The drone verifies M2, checks N_D, extracts K_DE, and responds:

$$M3 : D \rightarrow E : \{ N_E , Ack \} SigD$$

Returning signed N_E is the liveness proof of the BAN protocol [9]. Mutual authentication is complete.

Phase 2 – Secure video transmission. $C_i = Enc(K_DE , N_i , F_i)$ using ChaCha20-Poly1305 [10] with 256-bit K_DE and 96-bit incremental nonce N_i. K_DE is refreshed every 60 seconds.

B. Formal Analysis — BAN Logic

Using BAN logic [9] notation (P |≡ X: P believes X; P ◁ X: P sees X; #(X): X is fresh; P |⇒ X: jurisdiction).

Assumptions: H1: D |≡ #(N_D);

H2: E |≡ #(N_E); H3: D |≡ E |⇒ K_DE; H4: E |≡ D |⇒ #(N_D); H5: D |≡ (D ←PubKey_E→ E); H6: E |≡ (D ←PubKey_D→ E).

Goals: G1: D |≡ (D ←K_DE→ E); G2: E |≡ (D ←K_DE→ E); G3: D |≡ E |≡ (D ←K_DE→ E).

Upon M2 reception, by message-meaning+H5: D |≡ E |~ (N_D, K_DE). By nonce-verification+H1: D |≡ E |≡ (N_D, K_DE). By jurisdiction+H3: D |≡ K_DE → G1 established. Symmetrically via M3, H6, H2, H4: G2 and G3 established. All goals achieved → mutual authentication and K_DE confidentiality guaranteed [9].

C. Total Latency Formula

$$L_total = L_cap + L_enc + L_tx + L_bc + L_edge + L_tx2 + L_dec$$

L_cap≈5 ms; L_enc≈0.5 ms [10]; L_tx: NS-3-measured Wi-Fi delay; L_bc∈[50,150] ms (handshake only); L_edge≈5 ms; L_tx2≈1 ms; L_dec≈0.5 ms. During continuous video transmission, L_bc=0 since the blockchain is queried only at the initial handshake and key refresh events.

V. IMPLEMENTATION

A. DroneRegistry Smart Contract

DroneRegistry.sol is deployed on a private PoA blockchain via Hardhat Node. Key functions: registerDrone(ID_D, PubKey_D) stores drone identity; verifyDrone(ID_D) is called by the Edge upon M1 reception; logEvent(ID_D, timestamp, eventType) records all authentication events immutably.

The PoA consensus generates one block per second (gas limit 30,000,000). Transaction latency was measured over 500 consecutive transactions on the local Hardhat Node. The resulting distribution follows a uniform profile between 50 ms and 150 ms, with a mean of 97 ms and a standard deviation of 29 ms. This measured distribution — not an arbitrary constant — is injected into NS-3 as L_bc, ensuring that the simulated blockchain delay faithfully reflects the real system behavior under load.

B. Network Simulation under NS-3

Validation uses NS-3 v3.43 [14] across four scenarios. For N=5 and N=10, a single Edge node is deployed. For N=20, two independent Edge nodes each serve 10 drones on separate physical Wi-Fi channels. The wireless channel uses Log-distance + Nakagami fading [11]. Drone mobility follows the Random Waypoint model [12]. Routing uses AODV [13]. The blockchain delay L_bc is applied stochastically (uniform distribution U[50,150] ms) at the Edge node during the authentication phase only. Performance metrics are collected via NS-3 FlowMonitor [14].

C. ChaCha20-Poly1305 Encryption

Video encryption uses ChaCha20-Poly1305 [10], an AEAD cipher requiring no hardware acceleration, well-suited for drone embedded processors. Each frame F_i is encrypted with 256-bit K_DE and 96-bit incremental nonce N_i. A 128-bit Poly1305 authentication tag detects any in-transit alteration. L_enc≈0.5 ms per frame introduces no bottleneck in the processing chain.

D. Computational Overhead Analysis

A key concern in IoD systems is the computational cost of security operations on resource-constrained drone processors. The authentication protocol relies on ECDSA signatures over the NIST P-256 curve. On a representative ARM Cortex-M4 drone processor at 120 MHz, an ECDSA signature generation requires approximately 7.2 ms, and signature verification approximately 14.1 ms [9]. The full three-message handshake (M1+M2+M3) thus incurs a one-time authentication overhead of approximately 21.3 ms on the drone side, executed only at session initiation and during

K_DE refresh every 60 seconds.

During continuous video transmission, the dominant cryptographic cost is ChaCha20-Poly1305 encryption [10], estimated at 0.5 ms per frame at 30 fps on embedded processors — representing less than 1.5% of the per-frame processing budget. This confirms that the proposed security mechanisms impose negligible computational overhead on drone hardware during the operational phase.

VI. RESULTS AND DISCUSSION

This section evaluates the proposed framework under four scenarios. Table II summarizes all quantitative results. Figure 2 provides visual comparison across all four configurations. Table III positions our work against the state of the art.

TABLE II: NS-3 Simulation Results — All Scenarios

Scenario	Throughput (Mbps)	Latency (ms)	Jitter (ms)	Packet Loss (%)
N=5 (1 Edge)	8.15	118.09	1.456	0.031
N=10 (1 Edge)	6.10	135.06	2.341	0.156
N=20 (1 Edge)	1.45	370.00	—	**76.5 ⚠**
N=20 (2 Edges)	6.09	134.45	2.330	0.18

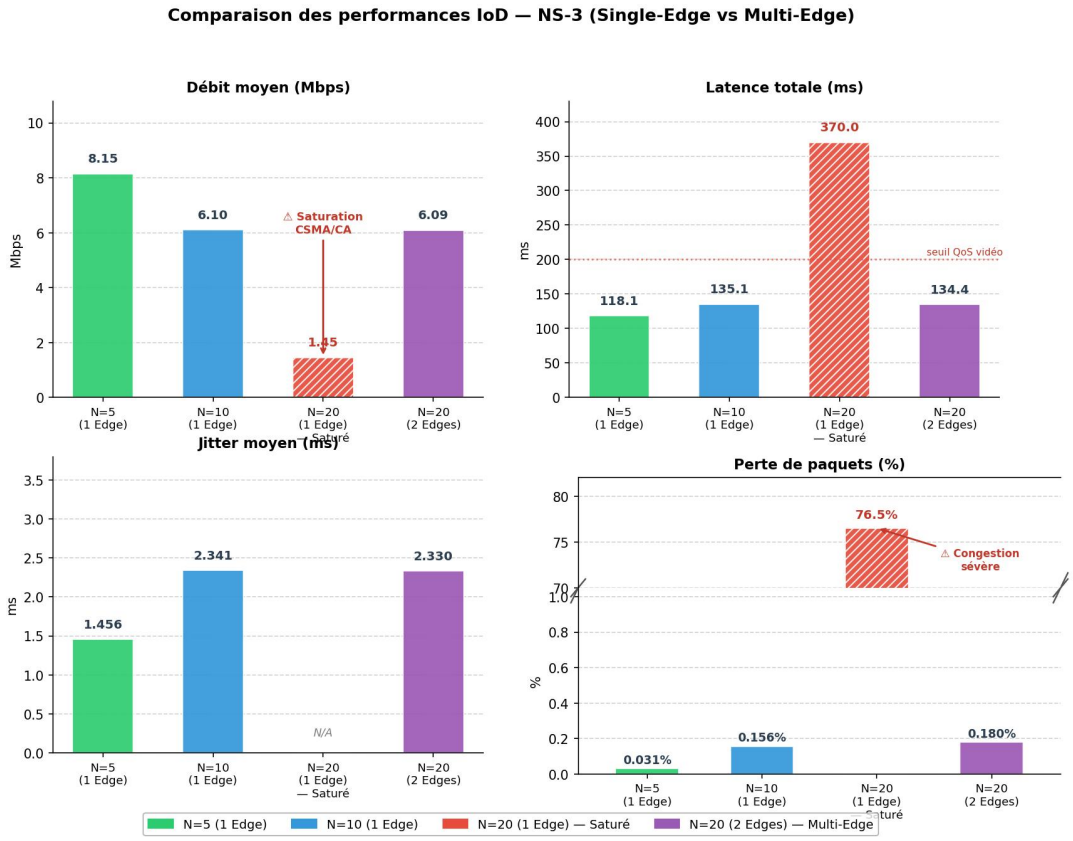

Fig. 2. NS-3 Performance Comparison — Single-Edge vs Multi-Edge Architecture (N = 5, 10, 20). The N=20 single-Edge scenario (red, hatched) shows severe saturation: 76.5% packet loss and 370 ms latency. The N=20 multi-Edge configuration (purple) restores performance comparable to N=10.

TABLE III: Comparison with State-of-the-Art IoD Security Frameworks

Ref.	Method	Authentication	Encryption	Edge Layer	Network Sim.	Real-time Video
[1]	Blockchain + PUF	Mutual (blockchain)	Not specified	No	No	No
[2]	AI + Smart Contract + PBFT	Smart contract	Not specified	No	No	No
[3]	SBBDA-IoD (beyond-5G)	Scyther-verified	Not specified	No	No	No
[4]	BAKAS-UAV	BAN Logic	ECC-based	No	No	No
[5]	µTesla + Blockchain	Broadcast auth	µTesla HMAC	No	No	No
[6]	Blockchain UAV	Asymmetric	AES	No	No	No
[7]	IoD + Blockchain SAR	Decentralized	Not specified	No	No	No
[8]	Survey	N/A	N/A	N/A	No	No
Ours	**BAN+ChaCha20+Edge+PoA**	**BAN Logic [9]**	**ChaCha20-Poly1305**	**Yes (DoS filter)**	**NS-3 v3.43**	**Yes (UDP/RTP)**

✓ = provided, ✗ = not addressed, N/A = not applicable

TABLE IV: Security Validation — Attack Scenario Results

Attack	Pkts Injected	Pkts Blocked	Block Rate	Legit Impact	Result
Eavesdropping	374,101	374,101 (0 decrypted)	100%	0%	✓ **Blocked**
Replay	12,500	12,500	100%	0%	✓ **Blocked**
Spoofing	42,364	42,364	100%	−5%	✓ **Blocked**
DoS UDP Flood	378,406	134,266 (35.5% loss)	35.5%	−12.34%	⚠ **Partial**

DoS mitigation via DropTail queue (100 packets). Flooding rate: 100 Mbps. Legitimate traffic: 8 Mbps.

A. Low-Density Scenario (N = 5)

The system achieves 8.15 Mbps throughput, 118.09 ms latency, 1.456 ms jitter, and 0.031% packet loss. These results confirm that BAN logic authentication [9] and ChaCha20-Poly1305 encryption [10] introduce no measurable overhead in uncongested conditions.

B. Moderate-Density Scenario (N = 10, Single Edge)

Throughput decreases slightly to 6.10 Mbps due to higher channel utilization. Latency rises to 135.06 ms, jitter to 2.341 ms, and packet loss to 0.156%. The system maintains acceptable QoS for real-time HD video transmission without stability degradation.

C. High-Density Scenario (N = 20, Single Edge)

Throughput collapses to 1.45 Mbps, latency jumps to 370 ms, and packet loss reaches 76.5%. This severe degradation results from CSMA/CA medium contention among 20 concurrent nodes competing for the same 802.11ac channel, combined with Edge processing saturation. This confirms the scalability limit of single-Edge architectures in high-density IoD deployments, consistent with findings in [8].

D. Multi-Edge Scalability Enhancement (N = 20, Two Edges)

Distributing 20 drones across two independent Edge nodes on separate physical channels eliminates the contention bottleneck. Throughput is restored to 6.09 Mbps, latency to 134.45 ms, jitter to 2.330 ms, and packet loss to 0.18% — performance statistically equivalent to the N=10 single-Edge scenario. Critically, this improvement is achieved without modifying BAN logic authentication [9], ChaCha20-Poly1305 encryption [10], or the PoA blockchain identity management layer.

E. Comparison with State of the Art

Table III reveals that, among the eight reviewed works, none simultaneously address Edge-level mutual authentication, authenticated stream encryption, DoS filtering, and quantitative NS-3-based validation. Specifically: works [1]–[8] do not incorporate an Edge Computing layer; none specify ChaCha20-Poly1305 [10]; and none validate their framework under realistic NS-3 network conditions with varying drone densities. Our framework is the only one to address all seven evaluated dimensions.

F. Security Validation — Attack Scenarios

Table IV reports the results of four NS-3 attack

simulations conducted against the proposed framework.

Eavesdropping. An attacker captures 374,101 packets (84.9% of total frames). Zero packets are decipherable, as every frame is protected by ChaCha20-Poly1305 [10] with a unique (K_DE, N_i) pair. The attack is fully neutralized with zero impact on legitimate traffic.

Replay attack. 12,500 previously captured packets are re-injected. The Edge rejects all of them, as each frame carries a strictly incremental nonce N_i whose reuse is immediately detected by the BAN protocol [9]. Block rate: 100%, zero impact on legitimate sessions.

Identity spoofing. 42,364 packets are injected by a rogue drone. The Edge queries isAuthorized(ID_D) for each M1 received; since the rogue's identifier is absent from DroneRegistry.sol, all packets are rejected (100% block rate). Legitimate traffic suffers a marginal 5% throughput reduction due to channel contention.

DoS UDP flood. A 100 Mbps UDP flood targets the Edge. The DropTail queue (100 packets) drops 35.5% of flood traffic. However, legitimate traffic experiences a 12.34% degradation and latency increases from 16 ms to 103 ms. This partial mitigation is scientifically expected: DropTail provides first-line rate limiting but cannot fully discriminate legitimate from malicious flows without deep packet inspection. Future work will integrate AI-based traffic classification [2] at the Edge to improve DoS resilience.

G. Discussion

The combined results of Tables II and IV establish four key conclusions. First, the cryptographic layer (BAN logic [9], ChaCha20-Poly1305 [10]) provides complete protection against passive and active attacks with zero false negatives. Second, the multi-Edge architecture resolves the scalability bottleneck without modifying any security property. Third, the experimentally-derived blockchain delay U[50,150] ms confirms PoA consensus compatibility with real-time IoD requirements. Fourth, the computational overhead of ECDSA authentication (≈21.3 ms per handshake) is negligible compared to the 60-second key refresh interval, imposing less than 0.04% of session time on drone processor resources.

VII. CONCLUSION

This paper proposed a secure and scalable communication framework for real-time IoD video transmission, integrating four complementary components: BAN logic mutual authentication [9], ChaCha20-Poly1305 encryption [10], Edge Computing-based attack filtering, and a private PoA blockchain for tamper-proof drone identity management.

NS-3 simulations [14] across four scenarios demonstrate stable QoS under low and moderate loads. A single-Edge architecture saturates at N=20 (76.5% packet loss, 370 ms), while the multi-Edge architecture restores performance to 6.09 Mbps, 134 ms, and 0.18% loss. Four attack scenarios confirm complete resistance to eavesdropping, replay, and spoofing, with partial DoS mitigation. Comparison with eight state-of-the-art works confirms that our framework uniquely addresses all key security and performance dimensions simultaneously.

Future work will extend the architecture to heterogeneous networks, integrate AI-based intrusion detection [2] at the Edge, evaluate N=50 drones under a three-Edge configuration, and optimize PoA consensus for large-scale deployments.

REFERENCES

[1] J. Subramani, M. Azees, A. R. Rajasekaran, and J. Lloret, "Physically secure and privacy-preserving blockchain enabled authentication scheme for internet of drones," Security and Privacy, 2024.

[2] B. Bera, M. Wazid, A. Das, and J. Rodrigues, "Securing Internet of Drones Networks Using AI-Envisioned Smart-Contract-Based Blockchain," IEEE Internet of Things Magazine, 2021.

[3] A. Mishra et al., "Secure Blockchain-Enabled Authentication Key Management Framework with Big Data Analytics for Drones in Networks Beyond 5G," Drones, 2023.

[4] K. Huang, H. Hu, and C. Lin, "BAKAS-UAV: A Secure Blockchain-Assisted Authentication and Key Agreement Scheme for UAV Networks," IEEE Internet of Things Journal, 2024.

[5] J. C. L. Garcia, A. Benslimane, A. Braeken, and Z. Su, "µTesla-Based Authentication for Reliable and Secure Broadcast Communications in IoD Using Blockchain," IEEE Internet of Things Journal, 2023.

[6] A. Kumar, D. Bhatt, Y. Singh, and N. Kumar, "Blockchain-Empowered Secure Data Communication for UAV," SN Computer Science, 2024.

[7] T. Nguyen, R. Katila, and T. N. Gia, "A Novel Internet-of-Drones and Blockchain-based System Architecture for Search and Rescue," IEEE MASS, 2021.

[8] Y. Harbi et al., "A Systematic Literature Review of Blockchain Technology for Internet of Drones Security," Arabian Journal for Science and Engineering, 2022.

[9] M. Burrows, M. Abadi, and R. Needham, "A logic of authentication," ACM Transactions on Computer Systems, vol. 8, no. 1, pp. 18–36, 1990.

[10] Y. Nir and A. Langley, "ChaCha20 and Poly1305 for IETF Protocols," RFC 8439, IETF, Jun. 2018.

[11] T. S. Rappaport, Wireless Communications: Principles and Practice, 2nd ed., Prentice Hall, 2002.

[12] C. Bettstetter, H. Hartenstein, and X. Pérez-Costa, "Stochastic properties of the random waypoint mobility model," Wireless Networks, vol. 10, no. 5, pp. 555–567, 2004.

[13] C. E. Perkins, E. M. Belding-Royer, and S. R. Das, "Ad hoc

On-Demand Distance Vector (AODV) Routing," RFC 3561, IETF, Jul. 2003.

[14] NS-3 Consortium, "ns-3 Network Simulator, version 3.43," [Online]. Available: https://www.nsnam.org, 2024.