Blockchain-Enhanced Secure Communication Framework for Real-Time Internet of Drones (IoD) Video Transmission

ABSTRACT

The rapid growth of the Internet of Drones (IoD) and the increasing deployment of real-time video applications for surveillance and reconnaissance have made communication security a critical issue. Traditional architectures remain vulnerable to replay attacks, identity spoofing, and eavesdropping, particularly when no robust and decentralized authentication mechanism is in place.

In this paper, we propose a secure communication framework built on four complementary components: a mutual authentication protocol based on BAN logic, ChaCha20-Poly1305 stream encryption, Edge Computing nodes acting as secure relays and attack filters, and a private Proof-of-Authority (PoA) blockchain. The latter ensures drone identity integrity through a smart contract deployed on Hardhat Node.

We validate the system through NS-3 simulations (version 3.43) considering three drone scenarios (N = 5, 10, and 20). The simulation setup includes an 802.11ac Wi-Fi channel, a Log-distance propagation model combined with Nakagami fading, Random Waypoint mobility, AODV routing, and a simulation duration of 300 seconds per scenario.

With 5 drones, the system achieves an average throughput of 8.15 Mbps, an end-to-end latency of 118 ms, and a packet loss ratio of 0.03%. With 10 drones, performance remains stable at 6.10 Mbps, 135 ms latency, and 0.16% loss. In contrast, a single-Edge architecture with 20 drones leads to severe congestion: packet loss reaches 76.5%, throughput drops to 1.45 Mbps, and latency increases to 370 ms.

To address this limitation, we introduce a multi-Edge architecture where drones are distributed across independent Edge nodes operating on separate physical channels. With two Edge nodes each handling 10 drones, the system restores stable performance, achieving 6.09 Mbps throughput, 134 ms latency, and only 0.18% packet loss. These results demonstrate that the proposed multi-Edge design ensures scalability without degrading quality of service or modifying the underlying security mechanisms.

I. INTRODUCTION

The Internet of Drones (IoD) represents a significant breakthrough in wireless networks. Drones can now capture and transmit real-time information for a wide range of applications: surveillance, disaster management, package delivery, and military reconnaissance [2], [8]. Among all the data they generate, live video transmission is arguably the most demanding, as it must simultaneously ensure high throughput, low

latency, and strong security, all in a mobile, wireless environment that is inherently insecure.

However, the openness of radio channels makes drones vulnerable to several types of attacks. An adversary can passively eavesdrop on video streams, impersonate a legitimate drone through replay attacks, alter packets in transit via man-in-the-middle attacks, or overwhelm the relay node with DoS/DDoS attacks [3], [4]. The problem is further exacerbated by the fact that drones often operate in isolated areas without direct supervision, and the data they carry may be sensitive, whether for civilian or military missions [1], [8].

In response to these threats, many researchers have proposed solutions to secure the IoD. Subramani et al. [1] developed an anonymous authentication scheme combining blockchain and physically unclonable functions (PUFs), allowing drones to quickly re-authenticate when changing operators without storing secret keys onboard. Bera et al. [2] proposed a smart contract and AI-based architecture using PBFT consensus for decentralized block validation. Mishra et al. [3] designed a framework combining blockchain and big data analytics for authentication and key management, specifically tailored to beyond-5G networks. Huang et al. [4] introduced BAKAS-UAV, a blockchain-assisted authentication and key agreement scheme that balances security and computational cost. Others, such as Garcia et al. [5] and Kumar et al. [6], have explored broadcast authentication and secure data exchange. Nguyen et al. [7] envisioned IoD and blockchain for search and rescue missions. Finally, Harbi et al. [8] provided a comprehensive review of existing work on blockchain for IoD security, highlighting remaining gaps.

Despite these advances, none of these works simultaneously address real-time video, mutual authentication at the Edge Computing layer, and quantitative network performance modeling under varying traffic loads.

This is where our work comes in. We propose a secure communication framework that combines four complementary components for real-time video transmission in the IoD. Our main contributions are as follows:

- A three-message mutual authentication protocol (M1, M2, M3) based on BAN logic, providing resistance to replay attacks, identity spoofing, and man-in-the-middle attacks.
- Integration of an Edge Computing node as a secure relay, combining blockchain-based identity verification with DoS attack filtering.
- A DroneRegistry smart contract deployed on a private Proof-of-Authority (PoA) blockchain via Hardhat Node, ensuring that drone identities remain tamper-proof and immutable.
- Comprehensive system validation through NS-3 simulations (v3.43) with three scenarios (5, 10, and 20 drones), using 802.11ac Wi-Fi, Log-distance propagation

with Nakagami fading, Random Waypoint mobility, and AODV routing, each simulation lasting 300 seconds.

The remainder of this paper is organized as follows. Section II presents the system model and proposed architecture. Section III details the authentication protocol. Section IV describes the implementation. Section V presents and analyzes the simulation results. Finally, Section VI concludes the paper.

II. RELATED WORK

Securing communications in the Internet of Drones has gained increasing attention in recent years, leading to several complementary research directions, which we summarize below.

Authentication and key management in the IoD. Early work in this area focused on designing lightweight mutual authentication protocols suited to drone constraints. Subramani et al. [1] proposed an anonymous authentication scheme based on blockchain and physically unclonable functions (PUFs), where drones no longer need to store secret keys for authentication, thereby improving physical security. The blockchain transfers the drone's authentication code to a new UAV operator when the drone changes zones, reducing re-authentication overhead. Huang et al. [4] introduced BAKAS-UAV, a blockchain-assisted authentication and key agreement scheme designed to simultaneously reduce computational load and centralization-related vulnerabilities. Garcia et al. [5] presented a reliable broadcast authentication mechanism combining μTesla and blockchain, well-suited to resource-constrained multi-drone environments. However, these works do not model network performance under variable traffic loads, nor do they address real-time video transmission.

Blockchain and smart contract frameworks for IoD security. A second line of research leverages smart contracts to automate and decentralize security management. Bera et al. [2] developed a security framework integrating artificial intelligence and Ethereum smart contracts, using PBFT consensus for decentralized block validation and big data analytics for anomaly detection. Mishra et al. [3] proposed SBBDA-IoD, a blockchain-enhanced authentication and key management framework with big data analytics, specifically targeting drones operating in beyond-5G networks and formally verified with the Scyther tool. Kumar et al. [6] presented a blockchain-based secure communication solution for UAVs, focusing on data confidentiality between drones and ground stations. While these approaches demonstrate the effectiveness of smart contracts for ensuring immutability and traceability of security events, they do not incorporate an Edge Computing node as an intermediate layer for attack processing and filtering.

System architectures and literature reviews. At a more architectural level, Nguyen et al. [7] explored the integration of IoD and blockchain in a search and rescue system, proposing a decentralized architecture where the blockchain coordinates drones and

ground teams without a single point of failure. Harbi et al. [8] conducted a comprehensive systematic literature review on blockchain for IoD security, identifying key gaps in existing approaches, notably the lack of validation through realistic network simulations and the absence of security mechanisms tailored to real-time video streams.

Positioning of our work. From this analysis, it becomes clear that despite significant advances in authentication and blockchain for the IoD, several limitations remain. On one hand, none of the cited works jointly address Edge-level mutual authentication, real-time video stream encryption using a fast symmetric algorithm such as ChaCha20-Poly1305, and quantitative network performance evaluation under varying drone densities. On the other hand, most proposed solutions rely on abstract software simulations, without using a realistic network simulator such as NS-3 that includes channel modeling with Nakagami fading and Random Waypoint mobility. In this work, we address these gaps by proposing a comprehensive framework that integrates these four dimensions: BAN logic authentication, Edge Computing, PoA blockchain, and NS-3 simulation, all within a unified system evaluated under three traffic load scenarios (N = 5, 10, and 20 drones).

III. SYSTEM MODEL AND PROPOSED ARCHITECTURE

The proposed system is organized into four hierarchical layers, as illustrated in Figure 1. Their respective roles and interactions are described below.

Drone layer (UAV). This is the lowest level of the system. Each drone captures a continuous video stream, encodes it in RTP format, and encrypts it using the ChaCha20-Poly1305 algorithm with the session key K_DE negotiated during the authentication phase. The encrypted stream is then transmitted over UDP through an 802.11ac Wi-Fi channel to the Edge node. Prior to any video transmission, the drone initiates a three-message mutual authentication protocol with the Edge node to establish a verified identity and a secure session key, thereby providing resistance to replay attacks and identity spoofing.

Edge Computing layer (MEC). This layer is the core of the security processing. The Edge node performs three complementary tasks: it authenticates the drone by querying the smart contract deployed on the blockchain, it generates and renews the session key K_DE every 60 seconds, and it filters Denial of Service (DoS) attacks using a limited-capacity DropTail queue. Once authentication is complete, the Edge node relays the encrypted video stream to the Ground Control Station without ever decrypting it, thus preserving end-to-end confidentiality against passive eavesdropping or man-in-the-middle attacks.

Blockchain layer (private PoA). This layer provides the decentralized trust infrastructure of the system. A private Proof-of-Authority (PoA) network hosts the DroneRegistry.sol smart contract, deployed via Hardhat Node, which immutably stores the identities and public keys of drones registered before takeoff. Video data never

passes through the blockchain; only authentication and registration events are logged there, ensuring integrity and traceability of drone identities in a decentralized and tamper-proof manner.

Ground Control Station layer (GCS). This is the receiving terminal. It receives the encrypted video stream relayed by the Edge node, decrypts it using the session key K_DE, and displays it in real time to the operator.

Multi-Edge extension for scalability. To overcome the scalability limitation observed with a large number of drones, the architecture is extended to a multi-Edge model. In this configuration, drones are divided into groups, each connected to an independent Edge node. Each Edge operates on a separate Wi-Fi channel, which reduces interference and avoids congestion. For the case of N = 20, two Edge nodes are deployed, each handling 10 drones. This enables parallel processing while preserving the same security mechanisms.

B. Communication model and simulation parameters

Drones communicate with the Edge node over an 802.11ac Wi-Fi channel operating in the 5 GHz band. The propagation model combines Log-distance path loss with Nakagami fading, reproducing realistic conditions of a mobile aerial environment. Drone mobility follows the Random Waypoint model with speeds between 5 and 15 m/s and pause times between 0 and 2 seconds. Inter-node routing is handled by the AODV protocol over a simulation duration of 300 seconds per scenario. Table I summarizes all the parameters used.

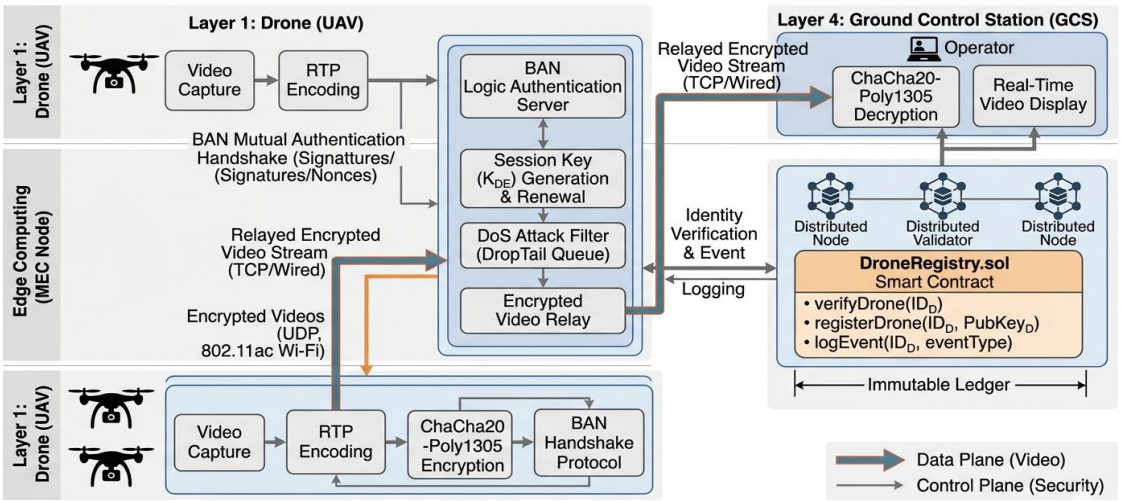

Fig. 1. Architectural Overview

TABLE I: NS-3 simulation parameters

Parameter	Value
Wi-Fi standard	802.11ac, 5 GHz
Bandwith	40 MHz (N=5), 80 MHz (N=10, 20)
Transmission power	20–23 dBm
Channel Model	Log-distance + Nakagami
Mobility	Random Waypoint, 5–15 m/s, pause 0–2s
Routing	AODV
Target video bitrate	6–8 Mbps per drone
Transport	UDP, 1200-byte packets
Simulation duration	300 seconds
Modeled blockchain delay	50–150 ms
Number of drones (N)	5, 10, 20

IV. AUTHENTICATION PROTOCOL

A. Protocol description

The proposed authentication protocol is based on BAN (Burrows-Abadi-Needham) logic and proceeds in three successive phases.

Phase 0 – Pre-flight registration. Before any takeoff, the system administrator registers each drone in the DroneRegistry.sol smart contract by submitting the register(ID_D, PubKey_D) transaction. This operation immutably stores the drone's identifier and its public key on the PoA blockchain. This phase is executed only once per drone and ensures that only legitimately registered drones can access the system.

Phase 1 – Mutual authentication. Authentication occurs through three messages exchanged between drone D and Edge node E, after verifying the drone's identity against the blockchain.

Message M1 is sent from the drone to the Edge node:

M1 : D → E : { ID_D , N_D } SigD

The drone sends its identifier ID_D and a freshly generated random nonce N_D, both signed with its private key SigD. The nonce N_D guarantees message freshness and protects against replay attacks.

Upon receiving M1, the Edge node queries the DroneRegistry.sol smart contract to verify that ID_D is indeed registered and to retrieve PubKey_D. It validates the drone's signature, then generates message M2:

$M2 : E \rightarrow D : \{ ID_E , N_E , N_D , K_DE , \tau \} SigE$

This message contains the Edge identifier ID_E, a fresh nonce N_E, the drone's nonce N_D (repeated from M1 to prove exchange liveness), a randomly generated session key K_DE, and an authorization token τ defined as:

$\tau = \{ ID_D , ID_E , N_D , T_exp \} SigE$

where T_exp is the session expiration timestamp. The whole message is signed with the Edge's private key SigE.

The drone receives M2, verifies the Edge's signature using PubKey_E, checks that N_D matches the nonce it sent in M1, then extracts K_DE and τ. It replies with message M3:

$M3 : D \rightarrow E : \{ N_E , Ack \} SigD$

By returning the signed N_E, the drone proves to the Edge that it has correctly received and decrypted M2. This is the liveness proof of the BAN protocol. Mutual authentication is then fully established.

Phase 2 – Secure video transmission. Once the session is established, each video frame F_i is encrypted with ChaCha20-Poly1305 using the session key K_DE and an incremental nonce N_i:

$C_i = Enc(K_DE , N_i , F_i)$

The encrypted stream is transmitted over UDP to the Edge, which relays it to the GCS. The session key K_DE is renewed every 60 seconds by re-executing the authentication phase.

B. Formal analysis using BAN logic

BAN logic uses the following notations:

- $P \mid\equiv X$: principal P believes X
- $P \lhd X$: principal P sees (receives) X
- $P \mid\sim X$: principal P once said X
- $\#(X)$: X is fresh (not replayed)

- $P \mid\Rightarrow X$: P has jurisdiction over X
- $P \leftarrow K \rightarrow Q$: P and Q share key K

Initial assumptions:

- H1 : $D \mid\equiv \#(N_D)$
- H2 : $E \mid\equiv \#(N_E)$
- H3 : $D \mid\equiv E \mid\Rightarrow K_DE$
- H4 : $E \mid\equiv D \mid\Rightarrow \#(N_D)$
- H5 : $D \mid\equiv (D \leftarrow PubKey_E \rightarrow E)$
- H6 : $E \mid\equiv (D \leftarrow PubKey_D \rightarrow E)$

Goals to achieve:

- G1 : $D \mid\equiv (D \leftarrow K_DE \rightarrow E)$
- G2 : $E \mid\equiv (D \leftarrow K_DE \rightarrow E)$
- G3 : $D \mid\equiv E \mid\equiv (D \leftarrow K_DE \rightarrow E)$

Derivation:

Upon receiving M2, drone D receives { ID_E , N_E , N_D , K_DE , τ } SigE. By the message-meaning rule and assumption H5:

$D \mid\lhd \{ N_D , K_DE \}$ SigE et H5 $\rightarrow D \mid\equiv E \mid\sim (N_D , K_DE)$

By the nonce-verification rule and H1:

$\#(N_D)$ et $D \mid\equiv E \mid\sim (N_D , K_DE) \rightarrow D \mid\equiv E \mid\equiv (N_D , K_DE)$

By the jurisdiction rule and H3:

$D \mid\equiv E \mid\Rightarrow K_DE \rightarrow D \mid\equiv K_DE$

This establishes G1: $D \mid\equiv (D \leftarrow K_DE \rightarrow E)$.

Symmetrically, upon receiving M3, Edge node E receives { N_E , Ack } SigD. By the message-meaning rule and H6:

$E \mid\lhd \{ N_E \}$ SigD et H6 $\rightarrow E \mid\equiv D \mid\sim N_E$

By the nonce-verification rule and H2:

$\#(N_E)$ et $E \mid\equiv D \mid\sim N_E \rightarrow E \mid\equiv D \mid\equiv N_E$

By the jurisdiction rule and H4:

$E \mid\equiv D \mid\Rightarrow \#(N_D) \rightarrow E \mid\equiv (D \leftarrow K_DE \rightarrow E)$

This establishes G2 and G3. Since all three goals are achieved, the protocol guarantees mutual authentication and confidentiality of the session key K_DE between the drone and the Edge node.

C. Total latency formula

The end-to-end latency of the system is modeled as follows:

L_total = L_cap + L_enc + L_tx + L_bc + L_edge + L_tx2 + L_dec

where:

- L_cap ≈ 5 ms : camera capture delay
- L_enc ≈ 0,5 ms : ChaCha20-Poly1305 encryption delay
- L_tx : Wi-Fi transmission delay (variable, measured by NS-3 depending on N)
- L_bc ∈ [50 , 150] ms : blockchain query delay (applied only during the initial handshake)
- L_edge ≈ 5 ms : Edge node processing delay
- L_tx2 ≈ 1 ms : wired transmission delay from Edge to GCS
- L_dec ≈ 0,5 ms : decryption delay at the GCS

The blockchain delay L_bc is the dominant term in the total latency during the authentication phase. However, during continuous video transmission, L_bc is zero because the blockchain is queried only during the initial handshake. Thus, each video frame achieves a reduced latency of L_total - L_bc.

V. IMPLEMENTATION

A. DroneRegistry smart contract

The blockchain component of the system is implemented as a Solidity smart contract named DroneRegistry.sol, deployed on a private Proof-of-Authority (PoA) blockchain via Hardhat Node. This local network emulates a low-latency PoA blockchain, suitable for the real-time constraints of the IoD.

The smart contract exposes three main functions. The registerDrone(ID_D, PubKey_D) function allows the administrator to register a drone before deployment by immutably storing its identifier and public key in the ledger. The verifyDrone(ID_D) function is called by the Edge node upon receiving message M1; it returns a boolean indicating whether the drone is registered and authorized, along with its public key PubKey_D required for signature verification. The logEvent(ID_D, timestamp, eventType) function records authentication events on the blockchain, ensuring complete traceability of each session. The contract is compiled with the Solidity compiler and deployed via a Hardhat

script onto the local Hardhat Node network, whose PoA consensus mechanism generates one new block per second with a gas limit of 30,000,000 per block.

The transaction processing delay on this private PoA network, measured during deployment, ranges between 50 and 150 ms depending on network load. This experimental delay is injected into NS-3 as the value of L_bc to faithfully model the system's behavior during network simulation.

B. Network simulation under NS-3

Network performance validation is conducted using NS-3 version 3.43. Three distinct scenarios are simulated by varying the number of active drones: N = 5, N = 10, and N = 20, each over a duration of 300 seconds. Simulation parameters are detailed in Table I of Section III.

The network topology places the drones in a 100 × 100 m flight zone. For the scenarios N = 5 and N = 10, a single centralized Edge node is deployed, with the Ground Control Station (GCS) connected to the Edge via a wired link. For the N = 20 scenario, a multi-Edge architecture is implemented, consisting of two independent Edge nodes. Each Edge node serves 10 drones and operates on a separate physical Wi-Fi channel, reducing interference and avoiding medium contention. Both Edge nodes are connected to the GCS through wired links.

Each drone generates a continuous UDP flow toward its associated Edge node, with a fixed packet size of 1200 bytes and a target bitrate of 6–8 Mbps per drone, representative of a real-time high-definition video stream.

The wireless channel is modeled using a combination of Log-distance path loss and Nakagami fading, ensuring realistic propagation conditions in a mobile aerial environment. Drone mobility follows the Random Waypoint model, with speeds ranging from 5 to 15 m/s and pause times between 0 and 2 seconds. Routing is handled by the AODV protocol, which is well-suited for dynamic and mobile ad hoc networks.

The blockchain query delay L_bc is modeled as an artificial delay injected at the Edge node. This delay is applied only during the authentication phase and not during continuous video transmission, reflecting the real system behavior.

Performance metrics are collected using the NS-3 FlowMonitor module. These include the average throughput per drone (Mbps), Wi-Fi transmission delay L_tx (ms), total end-to-end latency L_total (ms), average jitter (ms), and packet loss ratio (%).

C. ChaCha20-Poly1305 encryption

Video stream encryption is performed using ChaCha20-Poly1305, an authenticated encryption with associated data (AEAD) stream cipher designed for resource-constrained environments. ChaCha20-Poly1305 offers several key advantages for the IoD: it does not require hardware acceleration like AES-GCM, provides superior performance on drone embedded processors, and simultaneously offers confidentiality and integrity through the Poly1305 authentication tag.

Each video frame F_i is encrypted with the 256-bit session key K_{DE} and a 96-bit incremental nonce N_i, ensuring that no two frames are encrypted with the same (key, nonce) pair. The 128-bit authentication tag is appended to each encrypted frame, allowing the recipient (Edge node or GCS) to detect any packet alteration in transit. The session key K_{DE} is renewed every 60 seconds through a fresh execution of the authentication protocol, limiting the exposure window in case of compromise.

The encryption delay L_{enc} is estimated at 0.5 ms per frame, negligible compared to Wi-Fi transmission delays and blockchain query delays. This confirms that ChaCha20-Poly1305 does not introduce a bottleneck in the real-time processing chain.

V. RESULTS AND DISCUSSION

This section evaluates the performance of the proposed IoD security framework under three network densities: N = 5, N = 10, and N = 20 drones. The evaluation focuses on throughput, end-to-end latency, jitter, and packet loss, as illustrated in Fig. 2.

A. Low-density scenario (N = 5)

Under low network load, the proposed architecture achieves optimal performance. The system records an average throughput of 8.15 Mbps, with a mean end-to-end latency of 118.09 ms. Jitter stays minimal at 1.46 ms, while packet loss is negligible (0.031%). These results confirm that the integration of authentication, encryption, and Edge relaying does not introduce significant overhead in uncongested conditions.

B. Moderate-density scenario (N = 10, single Edge)

When the number of drones increases to ten, performance remains stable. Throughput decreases slightly to 6.10 Mbps due to higher channel utilization, while latency rises moderately to 135.06 ms. Jitter stays low at 2.34 ms, and packet loss is limited to 0.156%. These results show that the system maintains acceptable Quality of Service (QoS) under moderate traffic conditions without any stability degradation.

C. High-density scenario (N = 20, single Edge)

In the single Edge configuration, a significant performance drop occurs when the number of drones reaches twenty. Throughput falls sharply to 1.45 Mbps, while latency jumps to 370 ms. Packet loss rises dramatically to 76.5%, indicating severe congestion at both the wireless medium and the Edge processing level. This confirms that a centralized Edge architecture does not scale well for high-density IoD deployments.

D. Multi-Edge scalability enhancement (N = 20)

To overcome this limitation, we introduce a multi-Edge architecture, where drones are evenly distributed across two independent Edge nodes operating on separate Wi-Fi channels.

This design restores system performance to levels comparable with the moderate-load scenario. Throughput increases to 6.09 Mbps, latency drops to 134.0 ms, and jitter remains stable at 2.33 ms. Packet loss is significantly reduced to just 0.18%.

These results clearly show that distributing traffic across multiple Edge nodes effectively reduces wireless contention and processing bottlenecks. Importantly, this improvement is achieved without modifying the underlying security mechanisms, including BAN logic-based authentication, ChaCha20-Poly1305 encryption, and PoA blockchain-based identity management.

E. Discussion

Overall, the results highlight a clear trade-off between scalability and performance in a single Edge deployment. While the proposed security framework introduces minimal overhead under low and medium loads, system performance degrades significantly in high-density scenarios due to Edge saturation and channel contention.

The multi-Edge extension effectively resolves this limitation, confirming that distributed Edge deployment is essential for maintaining QoS in large-scale IoD environments.

VI. CONCLUSION

In this paper, we proposed a secure and scalable communication framework for the Internet of Drones (IoD), targeting real-time video transmission in surveillance and reconnaissance scenarios. The proposed architecture brings together four complementary components: a mutual authentication protocol based on BAN logic, ChaCha20-Poly1305 encryption for lightweight secure video streaming, an Edge Computing relay layer for attack filtering and session management, and a private Proof-of-Authority (PoA) blockchain for tamper-proof drone identity management.

We evaluated the system using NS-3 simulations under different network densities, namely N = 5, 10, and 20 drones. The results show that the proposed framework maintains stable performance under low and medium traffic conditions, with limited overhead introduced by the security mechanisms. However, a single Edge deployment suffers from severe degradation in high-density scenarios due to congestion and processing bottlenecks.

To address this limitation, we introduced a multi-Edge architecture. Simulation results demonstrate that distributing drones across multiple Edge nodes significantly improves throughput and latency while drastically reducing packet loss, all without modifying the underlying security mechanisms.

Overall, the proposed framework provides both strong security guarantees and scalable performance for real-time IoD video applications. Future work will focus on extending the architecture to heterogeneous drone networks, integrating AI-based intrusion detection at the Edge, and optimizing blockchain consensus mechanisms for large-scale deployments.

REFERENCES

[1] J. Subramani, M. Azees, A. R. Rajasekaran, and J. Lloret, "Physically secure and privacy-preserving blockchain enabled authentication scheme for internet of drones," Security and Privacy, 2024.

[2] B. Bera, M. Wazid, A. Das, and J. Rodrigues, "Securing Internet of Drones Networks Using AI-Envisioned Smart-Contract-Based Blockchain," IEEE Internet of Things Magazine, 2021.

[3] A. Mishra, M. Wazid, D. P. Singh, A. Das, J. Singh, and A. Vasilakos, "Secure Blockchain-Enabled Authentication Key Management Framework with Big Data Analytics for Drones in Networks Beyond 5G Applications," Drones, 2023.

[4] K. Huang, H. Hu, and C. Lin, "BAKAS-UAV: A Secure Blockchain-Assisted Authentication and Key Agreement Scheme for Unmanned Aerial Vehicles Networks," IEEE Internet of Things Journal, 2024.

[5] J. C. L. Garcia, A. Benslimane, A. Braeken, and Z. Su, "μTesla-Based Authentication for Reliable and Secure Broadcast Communications in IoD Using Blockchain," IEEE Internet of Things Journal, 2023.

[6] A. Kumar, D. Bhatt, Y. Singh, and N. Kumar, "Blockchain-Empowered Secure Data Communication for UAV," SN Computer Science, 2024.

[7] T. Nguyen, R. Katila, and T. N. Gia, "A Novel Internet-of-Drones and Blockchain-based System Architecture for Search and Rescue," IEEE 18th International Conference on Mobile Ad Hoc and Smart Systems (MASS), 2021.

[8] Y. Harbi, K. Medani, C. Gherbi, O. Senouci, Z. Aliouat, and S. Harous, “A Systematic Literature Review of Blockchain Technology for Internet of Drones Security,” Arabian Journal for Science and Engineering, 2022.