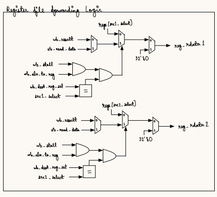
Register file forwarding logic
reg_rdata1
reg_rdata2
32'h0

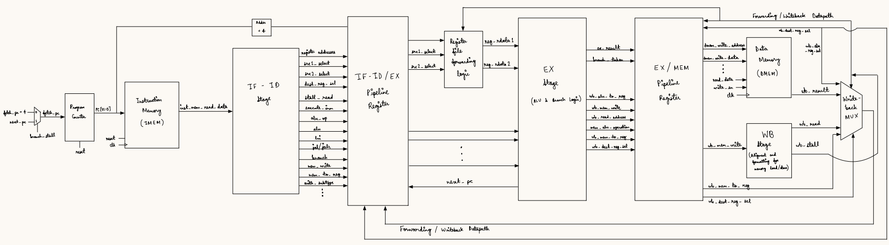
Forwarding / Writeback Datapath
Program Counter
Instruction Memory (IMEM)
IF - ID Stage
IF - ID / EX Pipeline Register
Register file forwarding logic
EX Stage
(ALU & branch logic)
EX / MEM Pipeline Register
Data Memory (DMEM)
WB Stage
(Aligned read handling for memory load/data)
Write back MUX
Forwarding / Writeback Datapath

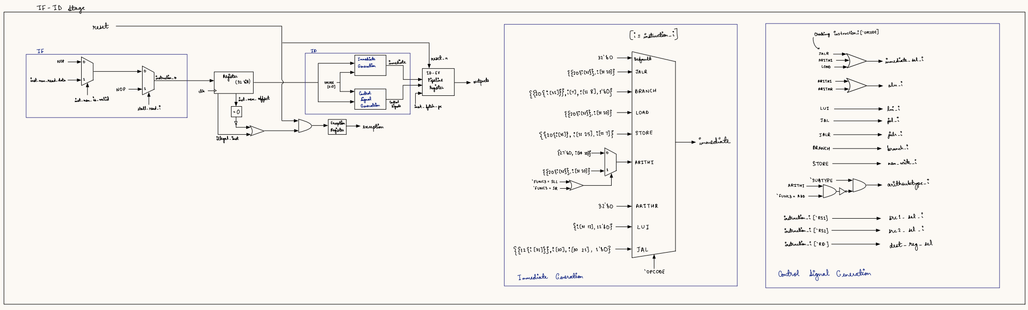
IF - ID Stage
IF
ID
Instruction Decoder
Immediate Generator
Control Signal Generator
Register file (32x32)
IF-ID Pipeline Register
Immediate Generator
Immediate Generation
Control Signal Generation

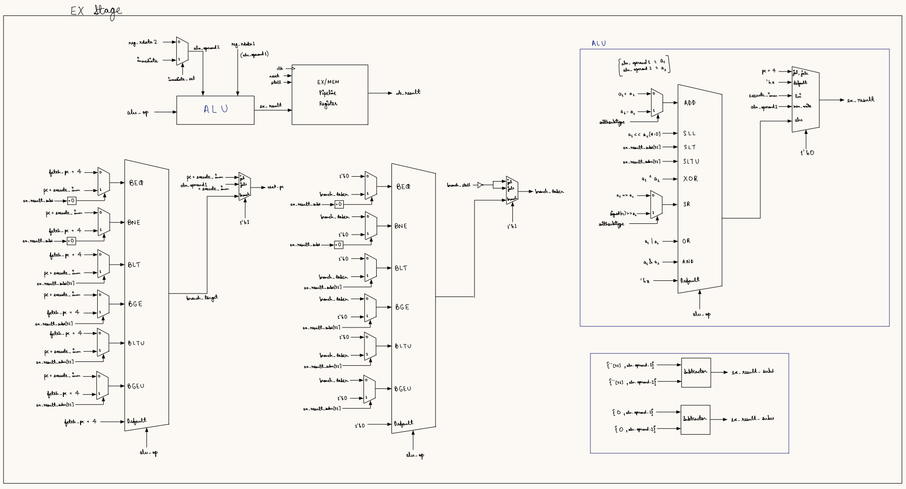
EX Stage
ALU
EX/MEM Pipeline Register
BEQ
BNE
BLT
BGE
BLTU
BGEU
ADD
SLL
SLT
SLTU
XOR
SR
OR
AND
LUI
JAL
ARITHR
ARITHI
STORE
LOAD
BRANCH
Immediate Generation
Control Signal Generation

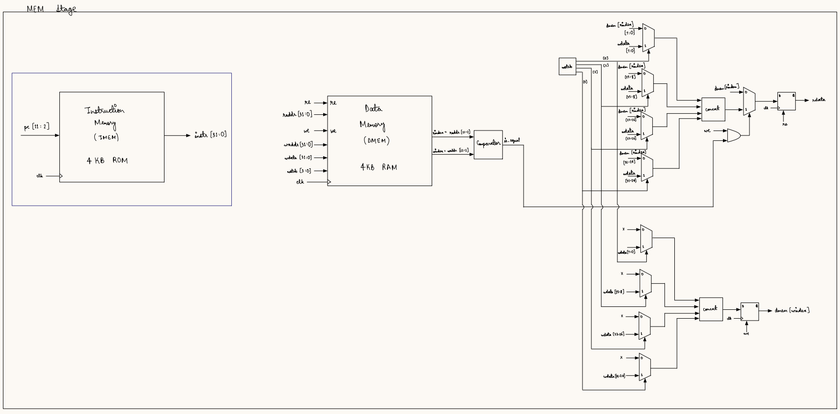
MEM Stage
Instruction Memory (IMEM)
4 KB ROM
Data Memory (DMEM)
4 KB RAM
sign extender
concat

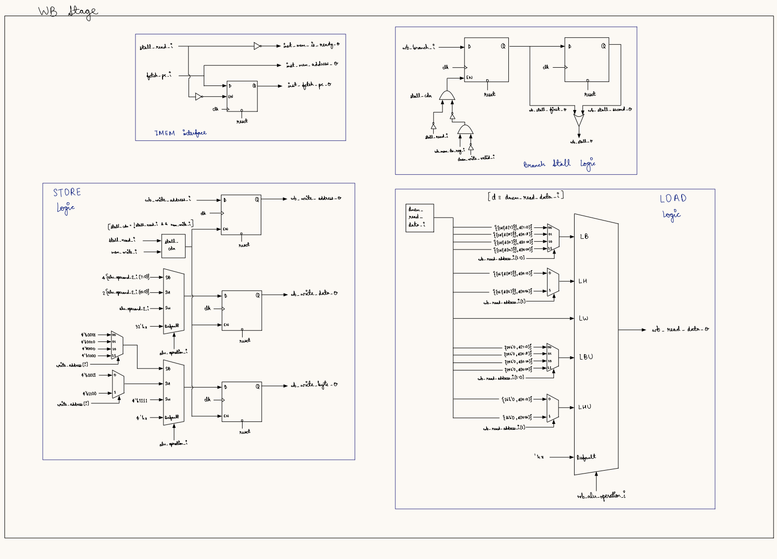
WB Stage
IMEM Interface
Branch Stall logic
STORE logic
LOAD logic