Instruction Pipelining: Hazard Resolution, Timing Constraints

Daniel Sanchez
Computer Science and Artificial Intelligence Laboratory
M.I.T.

Reminder: Pipelined RISC-V Datapath

without jumps

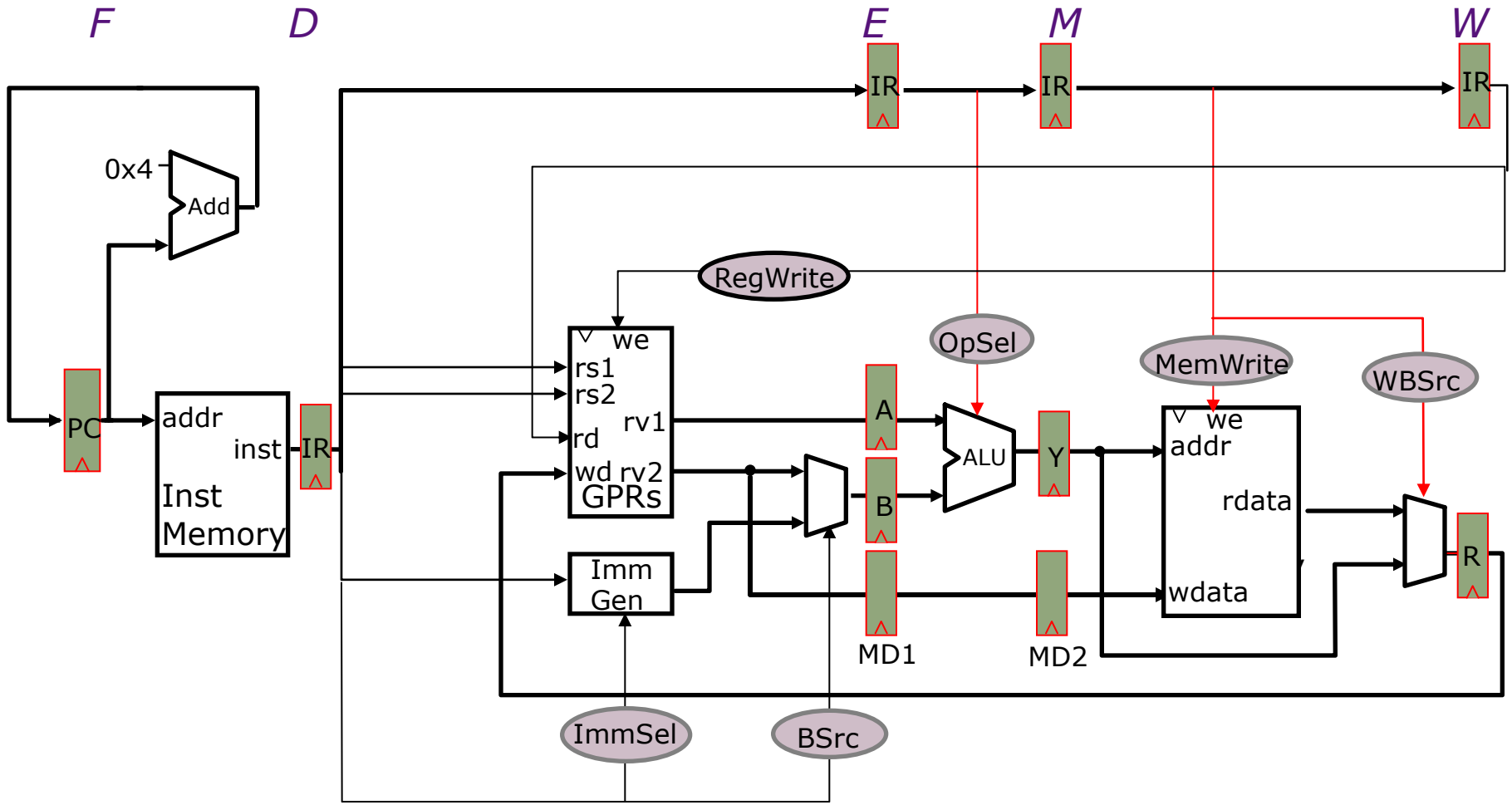

Pipeline Diagram – Ideal Pipelining

time	t0	t1	t2	t3	t4	t5	t6	t7	. . . .
(I_1) a1 ← a0 + 10	IF_1	ID_1	EX_1	MA_1	WB_1				
(I_2) a3 ← a2 + 12		IF_2	ID_2	EX_2	MA_2	WB_2			
(I_3) a5 ← a4 + 14			IF_3	ID_3	EX_3	MA_3	WB_3		
(I_4) a7 ← a6 + 16				IF_4	ID_4	EX_4	MA_4	WB_4	
(I_5) s1 ← s0 + 18					IF_5	ID_5	EX_5	MA_5	WB_5

In steady state, what are the …

Throughput (T)

CPI? 1

IPC? 1

Latency (L)

Cycles to exec each instr? 5

Num instrs in flight? $\bar{T} = \frac{\bar{N}}{\bar{L}}$ → N=5

Pipelining increases clock frequency,
but instruction dependences may increase CPI

How instructions can interact with each other in a pipeline

- An instruction in the pipeline may need a resource being used by another instruction in the pipeline → *structural hazard*

- An instruction may <u>depend</u> on a value produced by an earlier instruction
  - Dependence may be for a data calculation
    → data hazard
  - Dependence may be for calculating the next PC
    → control hazard (branches, interrupts)

Data Hazards

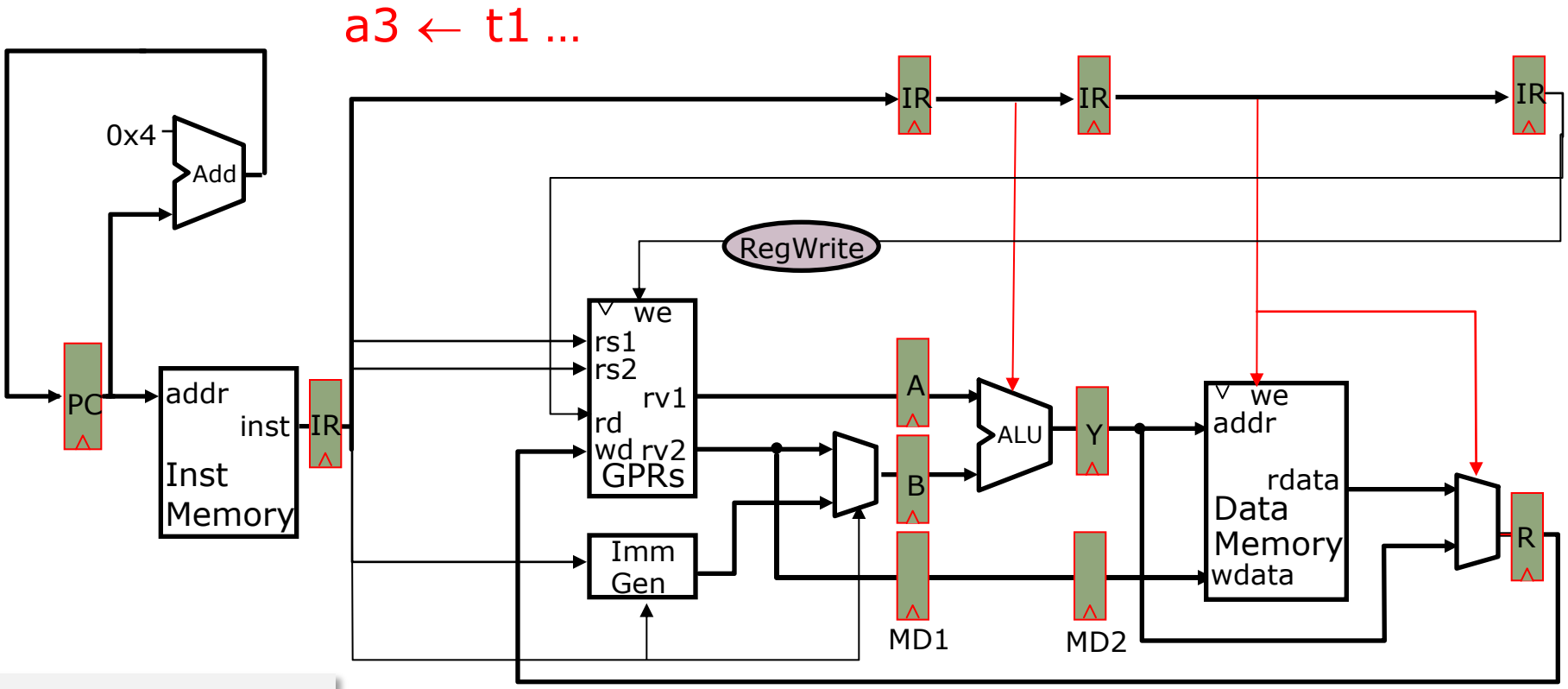


```
...
a1 ← a0 + 10
a3 ← a1 + 12
...
```

Cycle N+1

a1 is stale. Oops!

Pipeline Diagram – Hazard

time	t0	t1	t2	t3	t4	t5	t6	t7	. . . .
(I_1) a1 ← a0 + 10	IF_1	ID_1	EX_1	MA_1	WB_1				
(I_2) a3 ← a1 + 12		IF_2	ID_2	EX_2	MA_2	WB_2			

a1 is stale. Oops!

Resolving Data Hazards

Strategy 1: *Wait for the result to be available by freezing earlier pipeline stages* → *stall*

Strategy 2: *Route data as soon as possible after it is calculated to the earlier pipeline stage* → *bypass*

Strategy 3: *Speculate on the dependence*
Two cases:
Guessed correctly → no special action required
Guessed incorrectly → kill and restart

Resolving Data Hazards

Strategy 1: *Wait for the result to be available by freezing earlier pipeline stages* → *stall*

time	t0	t1	t2	t3	t4	t5	t6	t7	. . . .
(I_1) a1 ← a0 + 10	IF_1	ID_1	EX_1	MA_1	WB_1				
(I_2) a3 ← a1 + 12		IF_2	ID_2	ID_2	ID_2	ID_2	EX_2	MA_2	WB_2

Stall DEC & IF when instruction in DEC reads a register that is written by any earlier in-flight instruction (in EXE, MEM, or WB)

Reminder: Stall Control Logic

ignoring jumps & branches

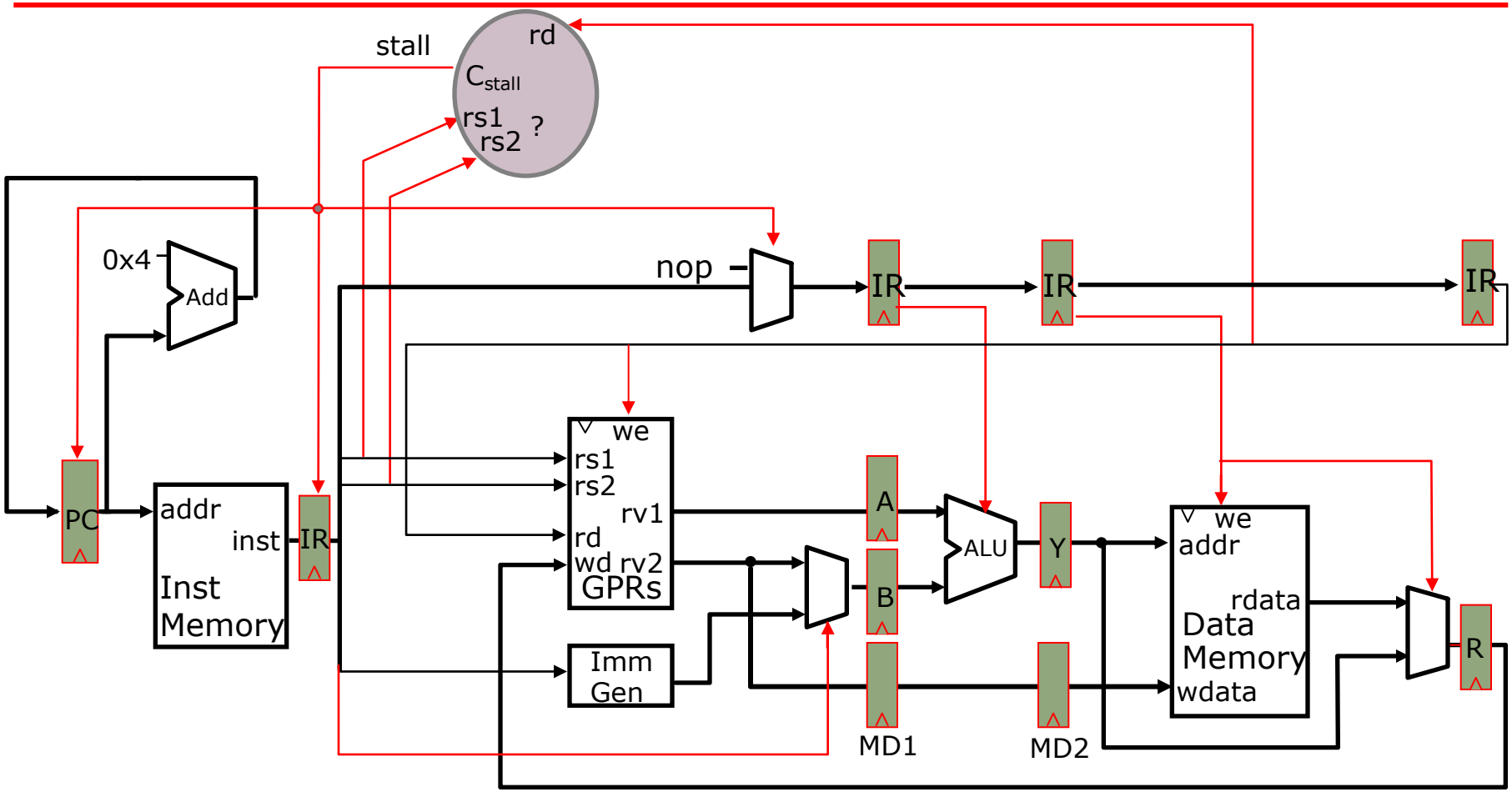

Compare the *source registers* of the instruction in the decode stage with the *destination register* of the *uncommitted in*structions.

Reminder: Stall Control Logic

ignoring jumps & branches

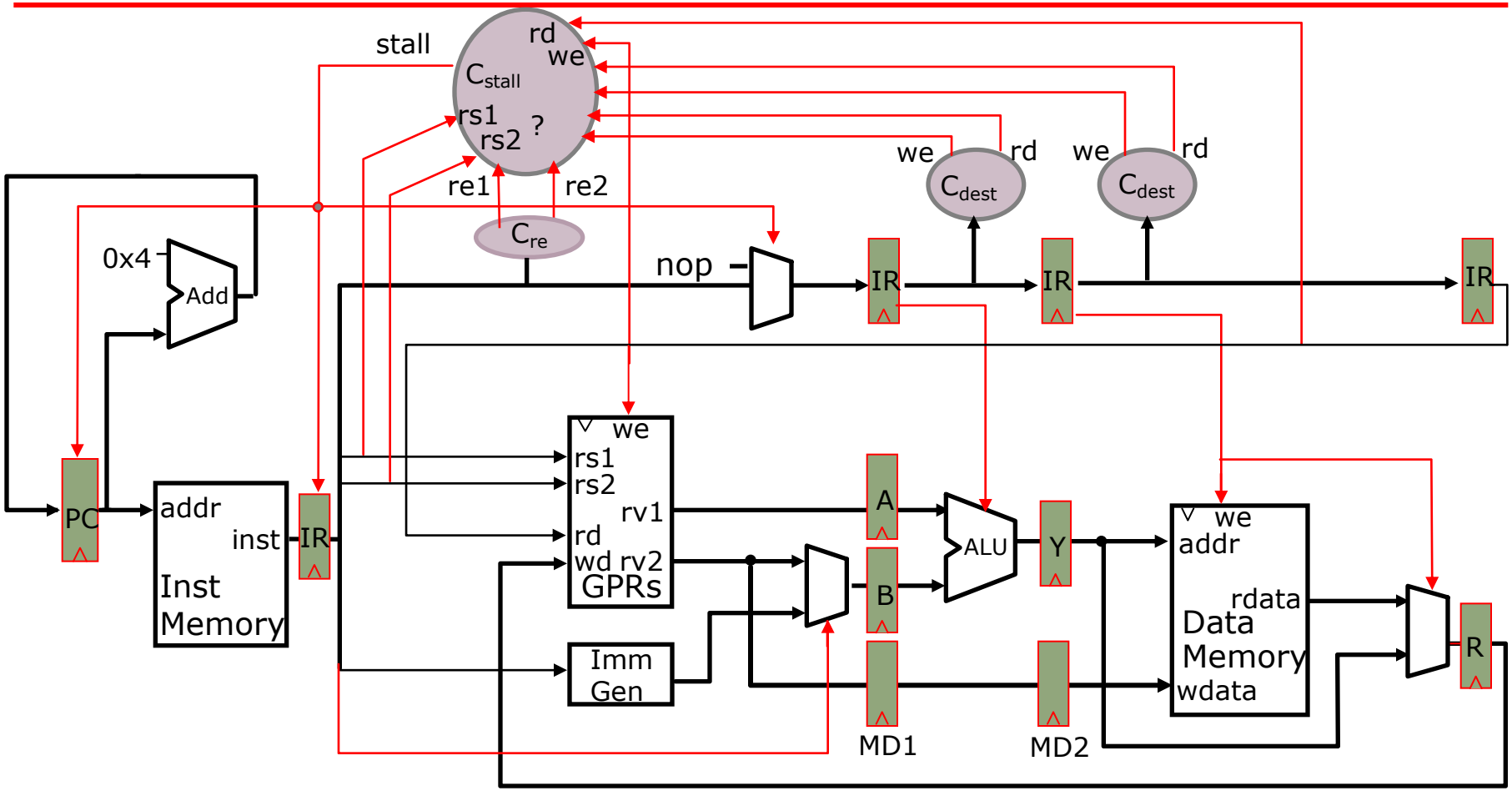

Should we always stall if the rs field(s) matches some rd?

not every instruction writes a register ⇒ we (write enable)

not every instruction reads a register ⇒ re (read enable)

Source & Destination Registers

R-type:

funct7	rs2	rs1	funct3	rd	opcode

I-type:

imm[11:0]		rs1	funct3	rd	opcode
imm[11:5]	rs2	rs1	func3	imm[4:0]	opcode

		source(s)	*dest*
ALU	rd ← (rs1) func (rs2)	rs1, rs2	rd
ALUi	rd ← (rs1) func imm	rs1	rd
LW	rd ← M [(rs1) + imm]	rs1	rd
SW	M [(rs1) + imm] ← (rs2)	rs1, rs2	
BRANCH	*cond* (rs1) func (rs2)		
	true: PC ← (PC) + imm	rs1, rs2	
	false: PC ← (PC) + 4	rs1, rs2	
JAL	rd ← (PC+4), PC ← (PC) + imm		rd
JALR	rd ← (PC+4), PC ← (rs1) + imm*	rs1	rd

**More precisely: pc ← {(reg[rs1] + imm)[31:1], 1'b0}*

Deriving the Stall Signal

C_{dest}

we = *Case* opcode

ALU, ALUi, LW, JAL, JALR $\Rightarrow (rd \neq 0)$

... $\Rightarrow$ off

C_{re}

re1 = *Case* opcode

ALU, ALUi, LW, SW, BRANCH, JR, JALR $\Rightarrow$ on

re2 = *Case* opcode

ALU, SW, BRANCH $\Rightarrow$ on

... $\Rightarrow$ off

C_{stall}

$$\begin{aligned} stall = {} & ((rs1_D == rd_E)\cdot we_E + \\ & (rs1_D == rd_M)\cdot we_M + \\ & (rs1_D == rd_W)\cdot we_W) \cdot re1_D \\ & + \\ & ((rs2_D == rd_E)\cdot we_E + \\ & (rs2_D == rd_M)\cdot we_M + \\ & (rs2_D == rd_W)\cdot we_W) \cdot re2_D \end{aligned}$$

This is not the full story !

Hazards due to Loads & Stores

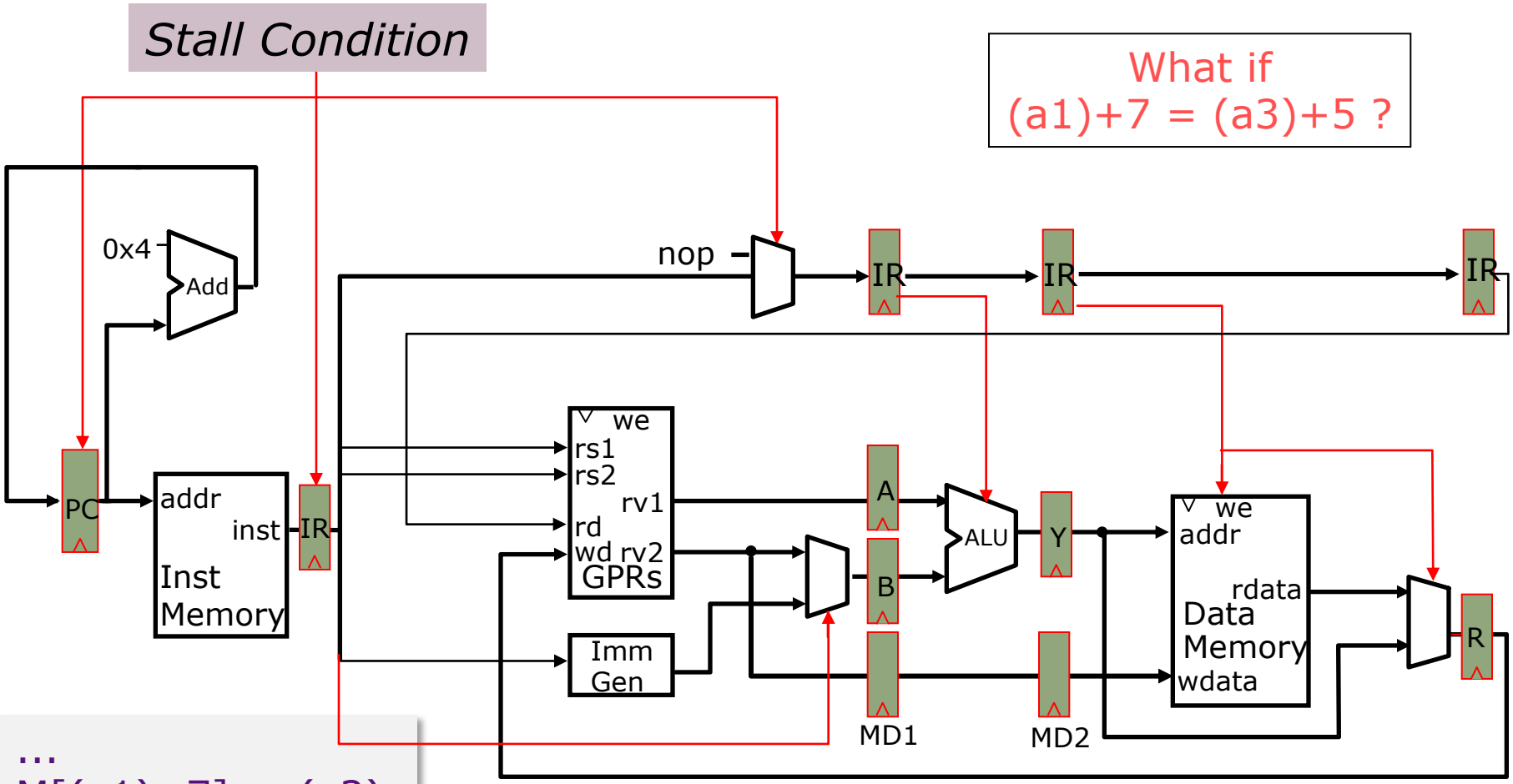

...
M[(a1)+7] ← (a2)
a4 ← M[(a3)+5]
...

Is there any possible data hazard in this instruction sequence?

Load & Store Hazards

```
...
M[(a1)+7] ← (a2)
a4 ← M[(a3)+5]
...
```

(a1)+7 = (a3)+5 ⇒ *data hazard*

However, the hazard is avoided because *our memory system completes writes in one cycle!*

Load/Store hazards are sometimes resolved in the pipeline and sometimes in the memory system itself.

More on this later in the course.

Resolving Data Hazards (2)

Strategy 2:

Route data as soon as possible after it is calculated to the earlier pipeline stage → *bypass*

Bypassing

time	t0	t1	t2	t3	t4	t5	t6	t7	. . . .
(I_1) a1 ← a0 + 10	IF_1	ID_1	EX_1	MA_1	WB_1				
(I_2) a4 ← a1 + 17		IF_2	ID_2	ID_2	ID_2	ID_2	EX_2	MA_2	WB_2
(I_3)			IF_3	IF_3	IF_3	IF_3	ID_3	EX_3	MA_3
(I_4)			*stalled stages*				IF_4	ID_4	EX_4

Each *stall* introduces a bubble ⇒ *CPI* > *1*

When is data actually available? At Execute

time	t0	t1	t2	t3	t4	t5	t6	t7	. . . .
(I_1) a1 ← a0 + 10		IF_1	ID_1	EX_1	MA_1	WB_1			
(I_2) a4 ← a1 + 17			IF_2	ID_2	EX_2	MA_2	WB_2		
(I_3)				IF_3	ID_3	EX_3	MA_3	WB_3	
(I_4)					IF_4	ID_4	EX_4	MA_4	WB_4

A new datapath, i.e., *a bypass*, can get the data from the output of the ALU to its input

Adding a Bypass

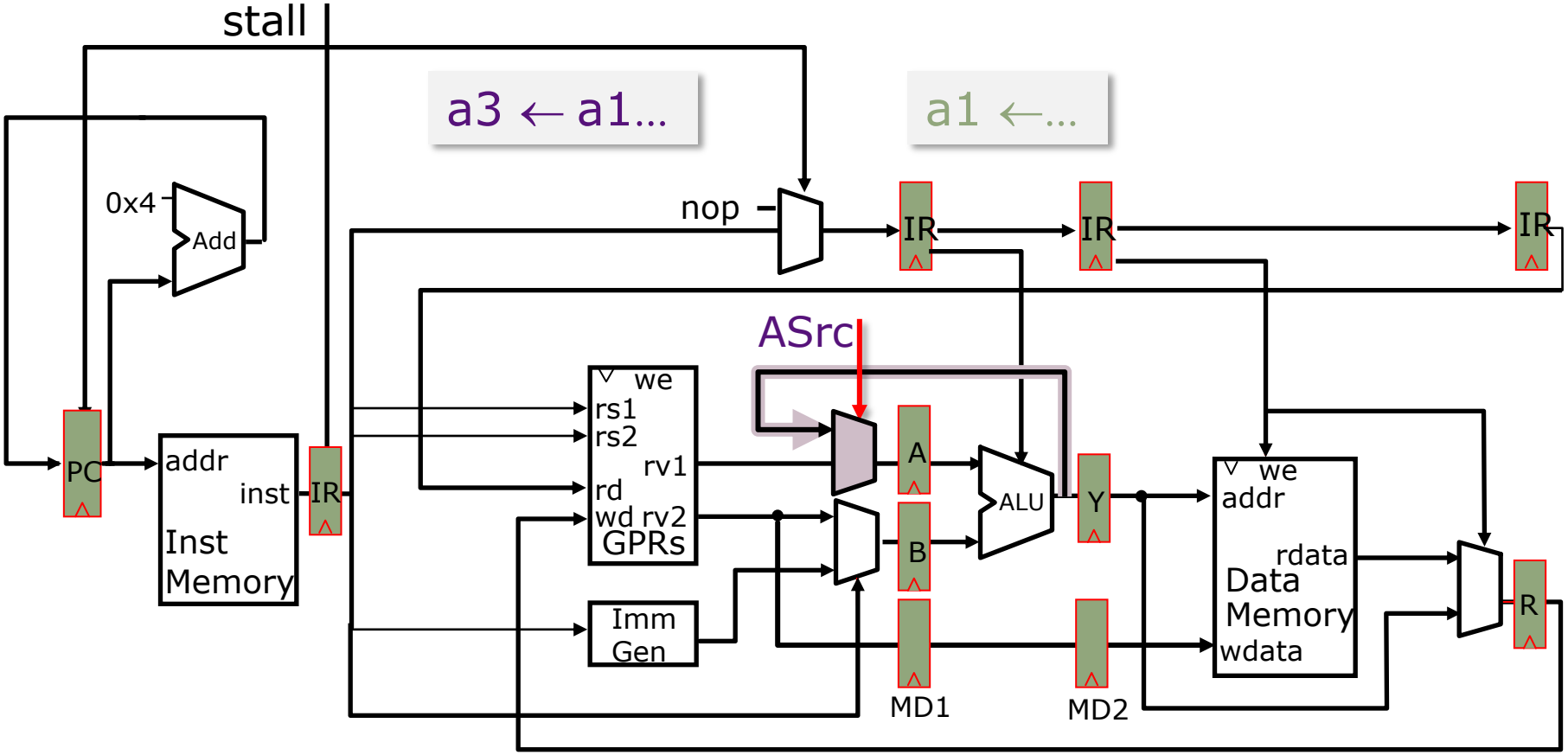

When does <u>this</u> bypass help?

(I_1) a1 ← a0 + 10 (I_2) a3 ← a1 + 12	*yes*	a1 ← M[a0 + 10] a3 ← a1 + 12	*no*	JAL ra 500 t3 ← ra + 12	*no*

The Bypass Signal

Deriving it from the Stall Signal

$$\text{stall} = \cancel{((rs1_D == rd_E)\ we_E} + (rs1_D == rd_M)\cdot we_M + (rs1_D == rd_W)\cdot we_W)\cdot re1_D$$
$$+((rs2_D == rd_E)\cdot we_E + (rs2_D == rd_M)\cdot we_M + (rs2_D == rd_W)\cdot we_W)\cdot re2_D$$

we = *Case* opcode
ALU, ALUi, LW, JAL, JALR $\Rightarrow (rd \neq 0)$
... $\Rightarrow$ off

$$ASrc = (rs1_D == rd_E)\cdot we_E \cdot re1_D$$

Is this correct?

No, only ALU and ALUi instructions can benefit from this bypass. Memory and JAL* instructions cannot.

How might we address this?

Split we_E into two components: we-bypass, we-stall

Bypass and Stall Signals

Split we_E into two components: we-bypass, we-stall

$$\text{we-bypass}_E = \textit{Case}\ \text{opcode}_E$$
$$\text{ALU, ALUi} \Rightarrow (rd \neq 0)$$
$$\ldots \Rightarrow \text{off}$$

$$\text{we-stall}_E = \textit{Case}\ \text{opcode}_E$$
$$\text{LW, JAL, JALR} \Rightarrow (rd \neq 0)$$
$$\ldots \Rightarrow \text{off}$$

$$\text{ASrc} = (rs1_D == rd_E) \cdot re1_D \cdot \text{we-bypass}_E$$

$$\text{stall} = ((rs1_D == rd_E) \cdot \text{we-stall}_E + (rs1_D == rd_M) \cdot we_M + (rs1_D == rd_W) \cdot we_W) \cdot re1_D + ((rs2_D == rd_E) \cdot we_E + (rs2_D == rd_M) \cdot we_M + (rs2_D == rd_W) \cdot we_W) \cdot re2_D$$

Fully Bypassed Datapath

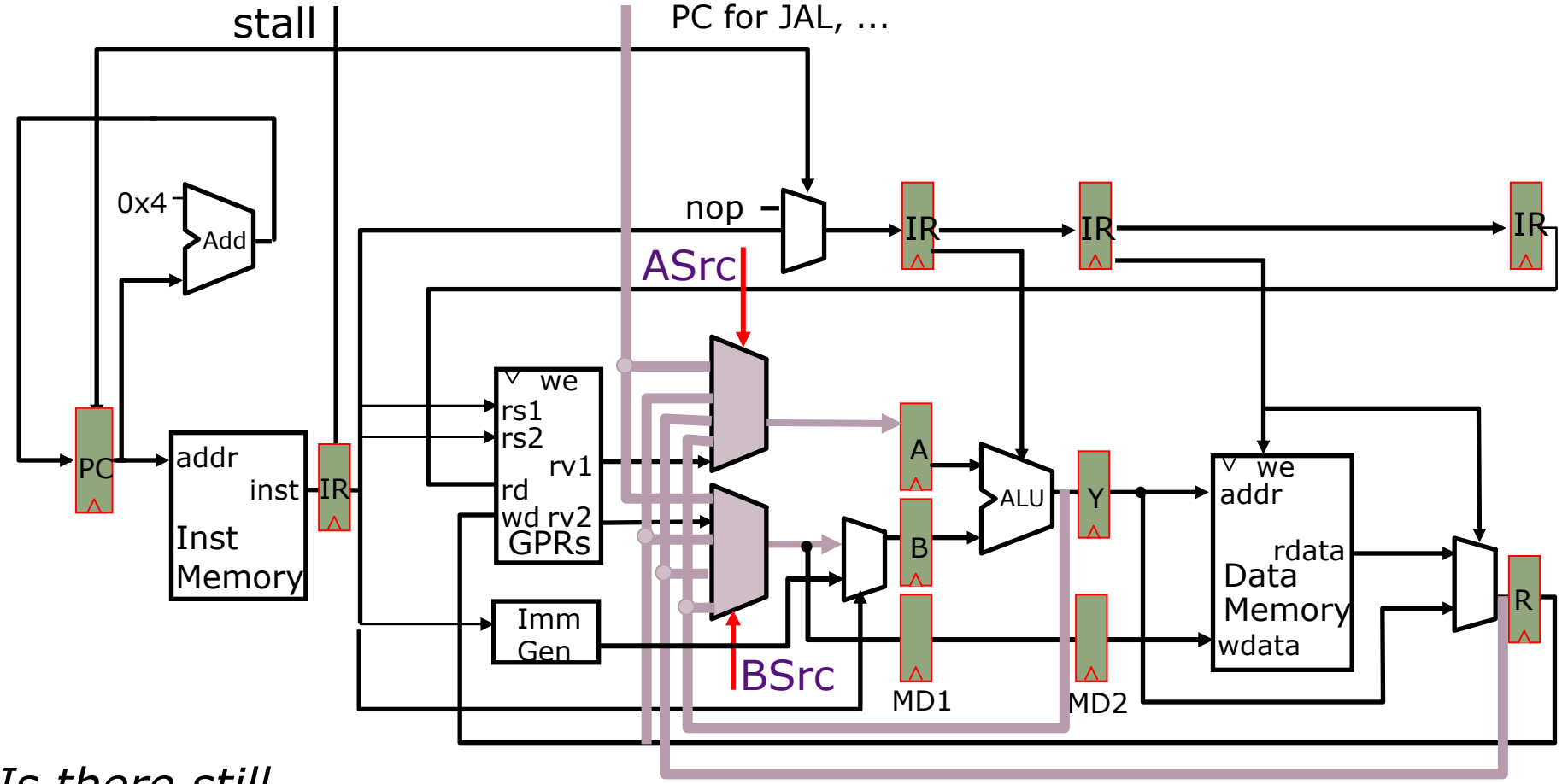

Is there still a need for the stall signal?

$$\text{stall} = (rs1_D == rd_E)\cdot(opcode_E == LW_E)\cdot(rd_E \neq 0)\cdot re1_D + (rs2_D == rd_E)\cdot(opcode_E == LW_E)\cdot(rd_E \neq 0)\cdot re2_D$$

Resolving Data Hazards (3)

Strategy 3:

Speculate on the dependence. Two cases:

Guessed correctly → no special action required

Guessed incorrectly → kill and restart

Instruction to Instruction Dependence

- What do we need to calculate next PC?
  - For Jumps (JAL)
    - Opcode, offset, and PC
  - For Jump Register (JALR)
    - Opcode, offset, register value
  - For Conditional Branches (e.g., BEQ)
    - Opcode, offset, PC, and register (for condition)
  - For all others (e.g., arithmetic insts)
    - Opcode and PC
- In what stage do we know these?
  - PC → Fetch
  - Opcode, offset → Decode (or Fetch?)
  - Register value → Decode
  - Branch condition ((rs1)== (rs2)) → Execute (or Decode?)

NextPC Calculation Bubbles

	time t0	t1	t2	t3	t4	t5	t6	t7	. . . .		
(I_1) a1 ← (a0) + 10	IF_1	ID_1	EX_1	MA_1	WB_1						
(I_2) a3 ← (a2) + 17		IF_2	IF_2	ID_2	EX_2	MA_2	WB_2				
(I_3)				IF_3	IF_3	ID_3	EX_3	MA_3	WB_3		
(I_4)						IF_4	IF_4	ID_4	EX_4	MA_4	WB_4

Resource Usage Diagram

	time t0	t1	t2	t3	t4	t5	t6	t7	. . . .		
IF	I_1	nop	I_2	nop	I_3	nop	I_4				
ID		I_1	nop	I_2	nop	I_3	nop	I_4			
EX			I_1	nop	I_2	nop	I_3	nop	I_4		
MA				I_1	nop	I_2	nop	I_3	nop	I_4	
WB					I_1	nop	I_2	nop	I_3	nop	I_4

nop ⇒ pipeline bubble

What's a good guess for next PC? PC+4

Speculate NextPC is PC+4

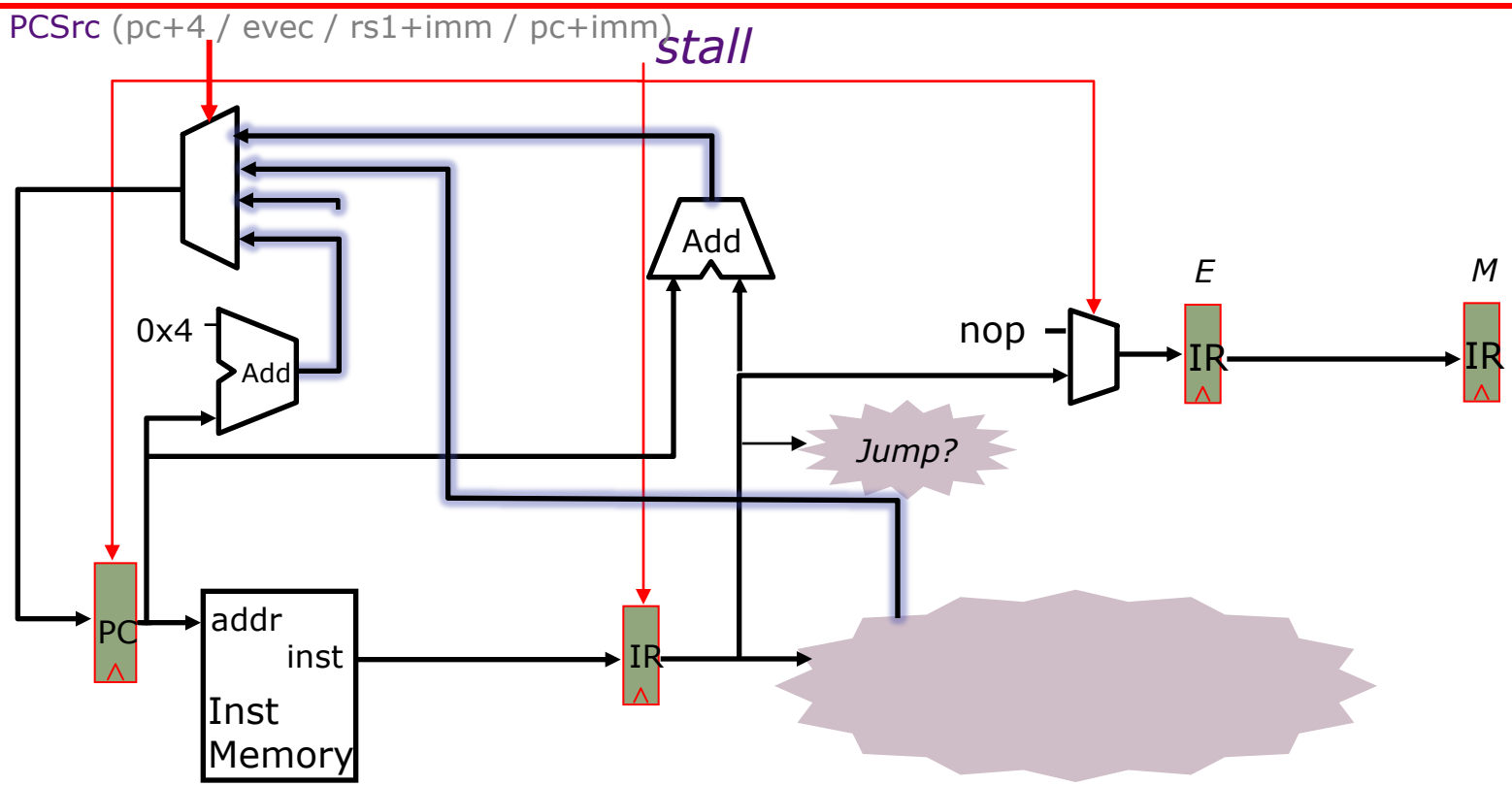

Speculate NextPC is PC+4

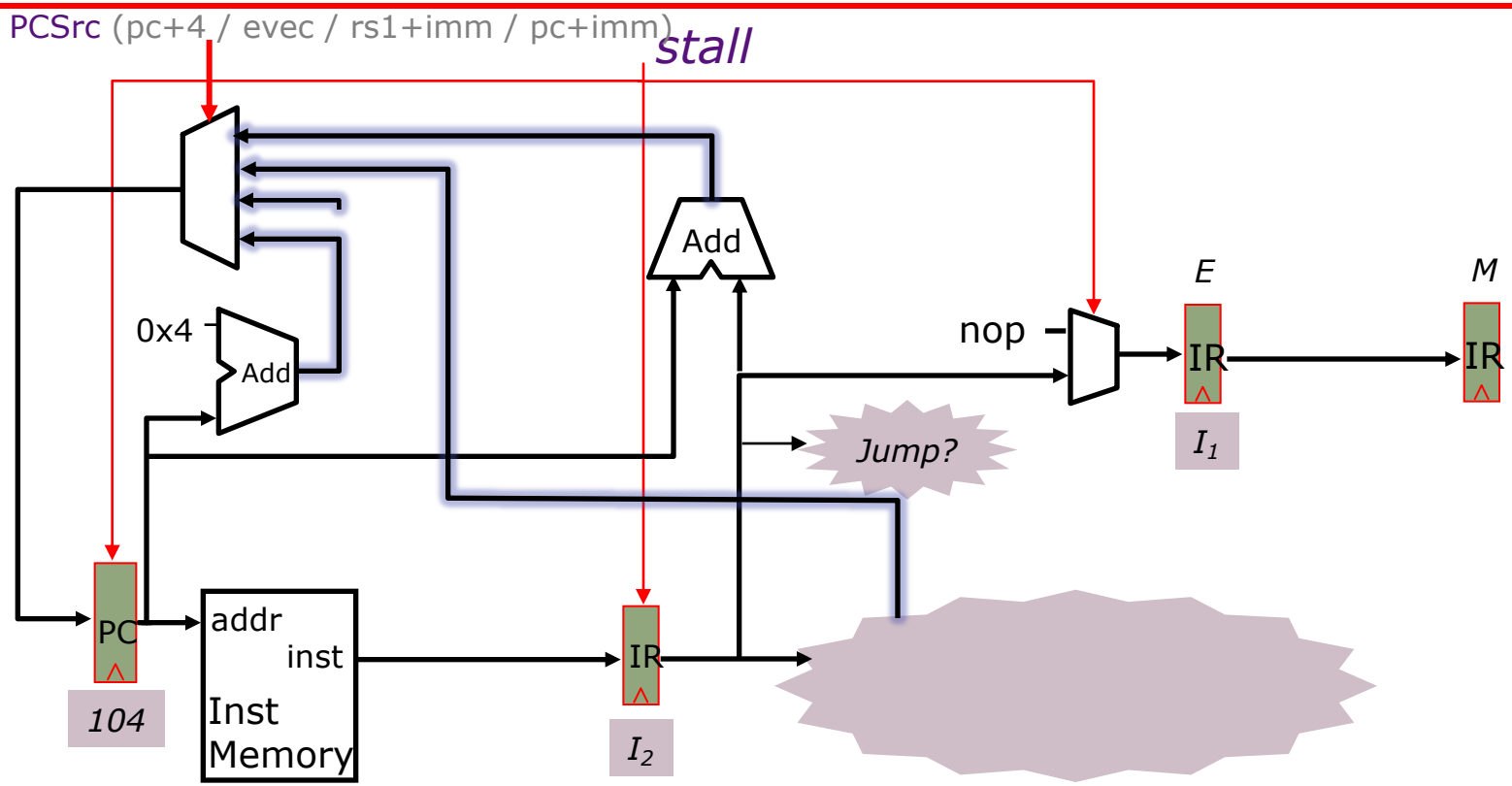

I_1	096	ADD
I_2	100	JAL ra 200
I_3	~~104~~	~~ADD~~ *kill*
I_4	304	ADD

What happens on mis-speculation, i.e., when next instruction is not PC+4?

How?

Pipelining Jumps

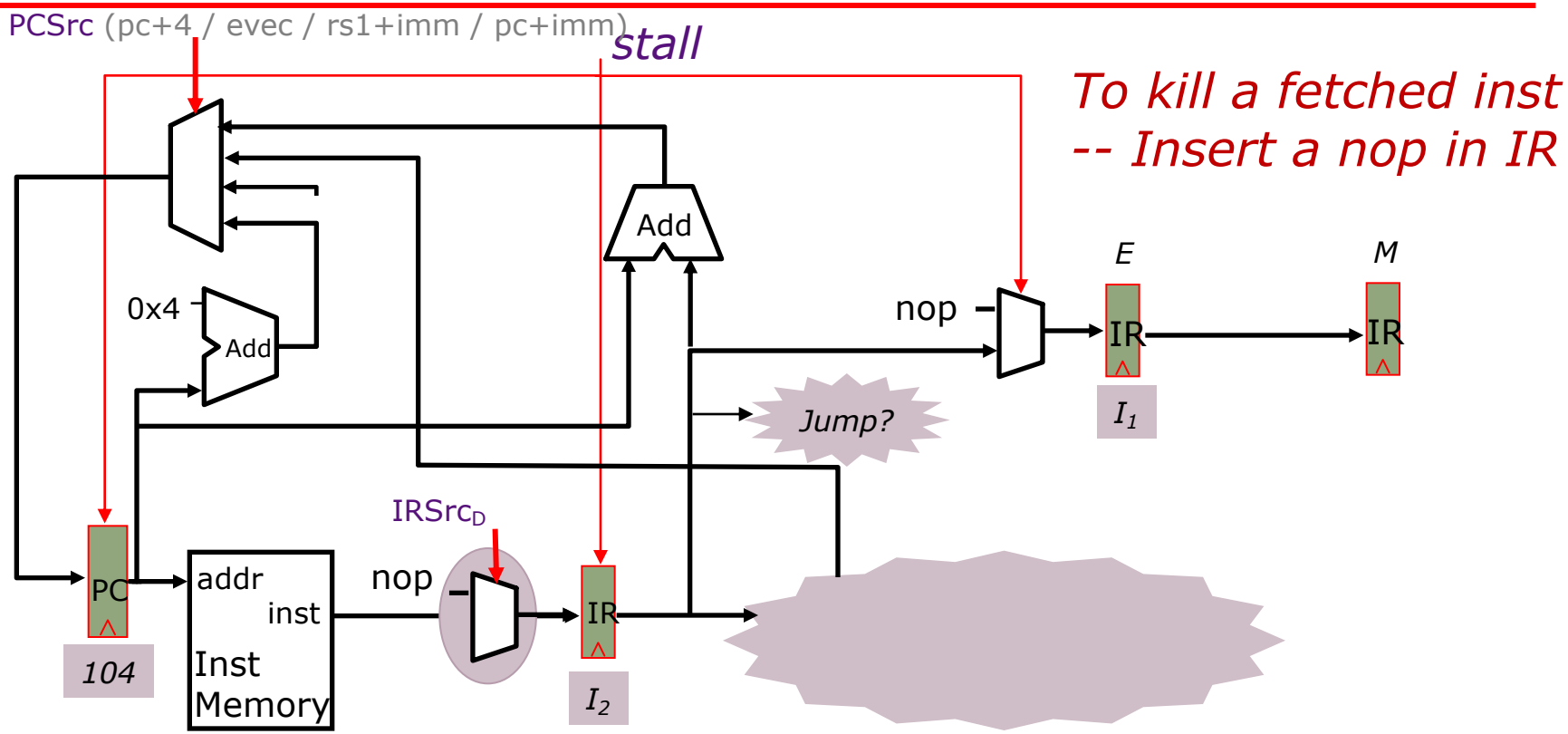

I_1	096	ADD
I_2	100	JAL ra 200
I_3	~~104~~	~~ADD~~ *kill*
I_4	304	ADD

IRSrc$_D$ = *Case* opcode$_D$
JAL, JALR $\Rightarrow$ nop
... $\Rightarrow$ IM

Pipelining Jumps

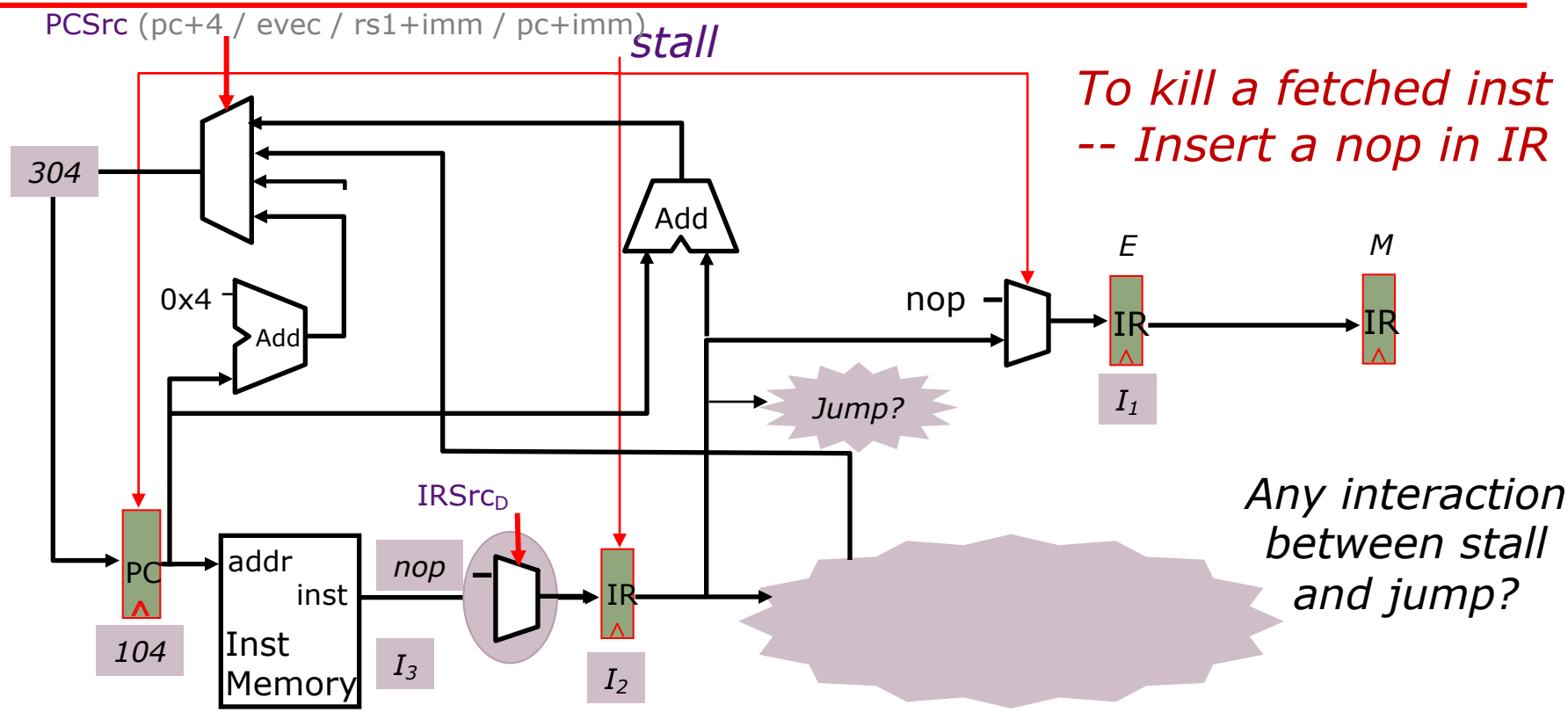

I_1	096	ADD
I_2	100	JAL ra 200
I_3	~~104~~	~~ADD~~ *kill*
I_4	304	ADD

$IRSrc_D$ = *Case* $opcode_D$
JAL, JALR $\Rightarrow$ nop
... $\Rightarrow$ IM

Jump Pipeline Diagrams

	time t0	t1	t2	t3	t4	t5	t6	t7	. . . .
(I_1) 096: ADD	IF_1	ID_1	EX_1	MA_1	WB_1				
(I_2) 100: JAL ra 200		IF_2	ID_2	EX_2	MA_2	WB_2			
(I_3) 104: ADD			IF_3	nop	nop	nop	nop		
(I_4) 304: ADD				IF_4	ID_4	EX_4	MA_4	WB_4	

Resource Usage Diagram

	time t0	t1	t2	t3	t4	t5	t6	t7	. . . .
IF	I_1	I_2	I_3	I_4	I_5				
ID		I_1	I_2	nop	I_4	I_5			
EX			I_1	I_2	nop	I_4	I_5		
MA				I_1	I_2	nop	I_4	I_5	
WB					I_1	I_2	nop	I_4	I_5

nop $\Rightarrow$ *pipeline bubble*

Pipelining Conditional Branches

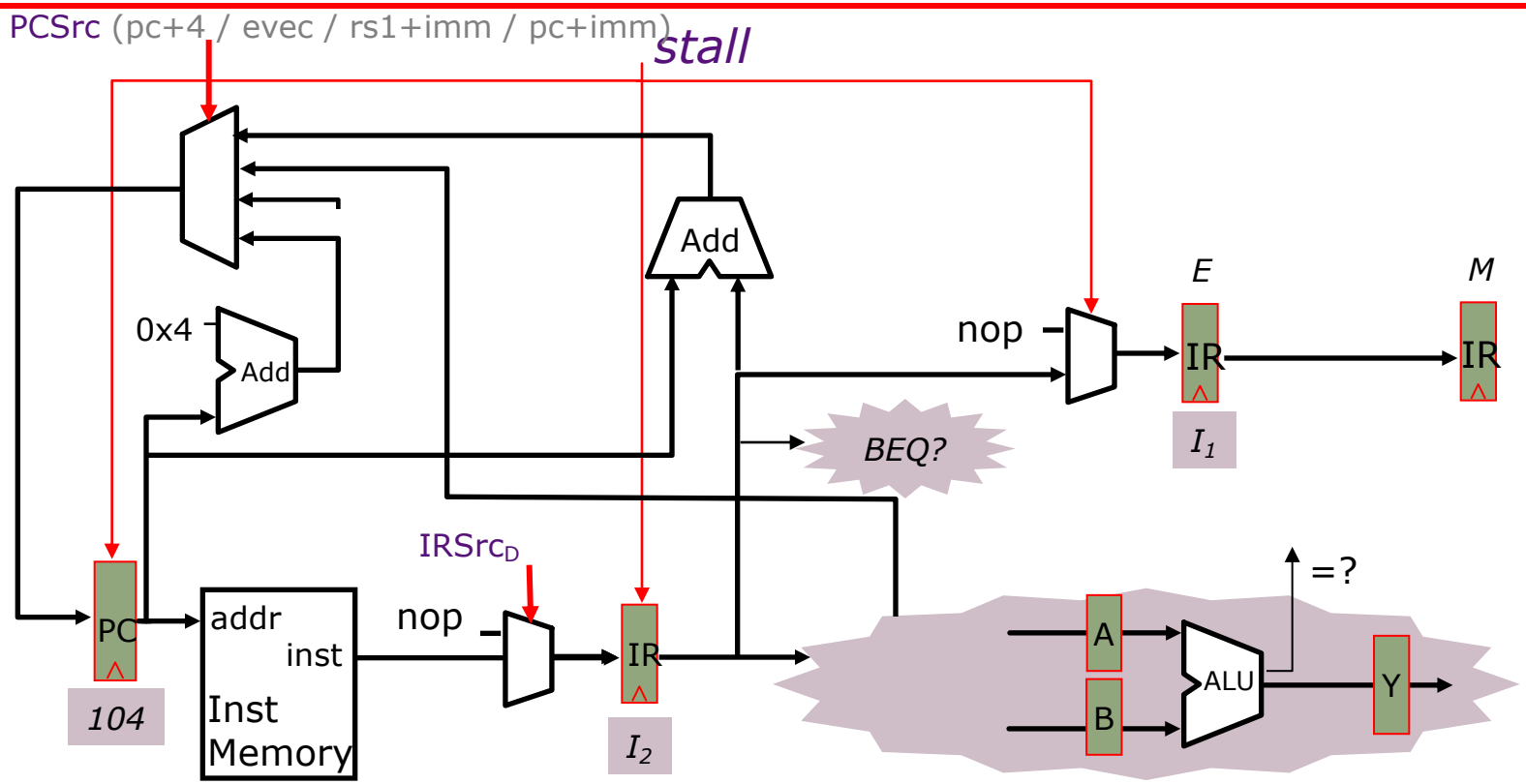

I_1	096	ADD
I_2	100	BEQ a1 a2 200
I_3	104	ADD
I_4	304	ADD

Branch condition is not known until the execute stage. *What action should be taken in the decode stage?*

Continue speculating. Decode I_3 and fetch I_4

Pipelining Conditional Branches

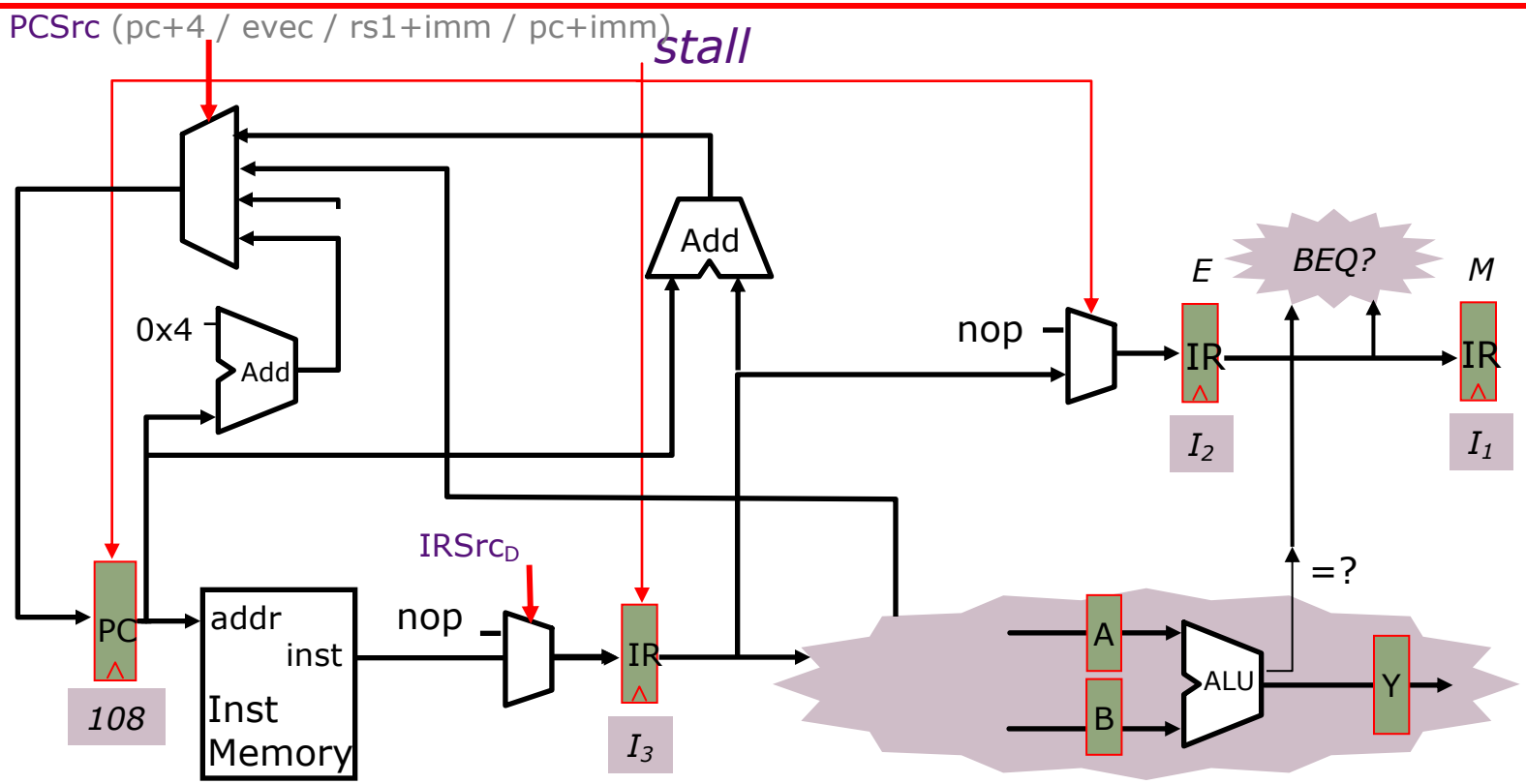

I_1	096	ADD
I_2	100	BEQ a1 a2 200
I_3	104	ADD
I_4	304	ADD

If the branch is taken
- kill the two following instructions
- the instruction at the decode stage is not valid

⇒ *stall signal is not valid*

Pipelining Conditional Branches

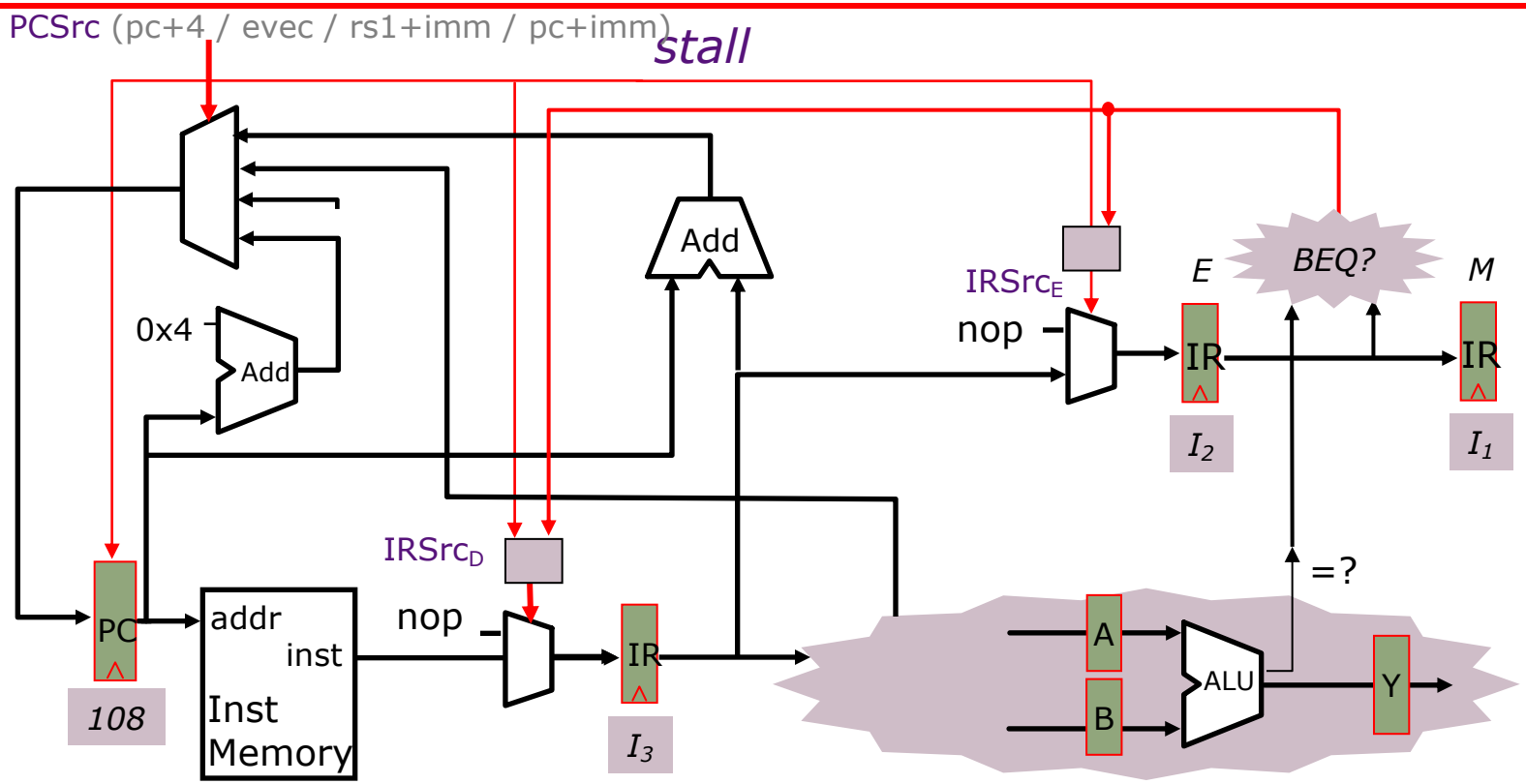

I_1	096	ADD
I_2	100	BEQ a1 a2 200
I_3	104	ADD
I_4	304	ADD

Don't stall if the branch is taken. Why?

Instruction at the decode stage is invalid

Control Equations for PC and IR Muxes

$IRSrc_D$ = *Case* $opcode_E$
  Taken branch ⇒ nop
  Case $opcode_D$
    JAL, JALR ⇒ nop
    ... ⇒ IM

Give priority to the older instruction, i.e., execute stage instruction over decode stage instruction

$IRSrc_E$ = *Case* $opcode_E$
  Taken branch ⇒ nop
  ... ⇒ stall·nop + !stall·IR_D

PCSrc = *Case* $opcode_E$
  Taken branch ⇒ pc + imm (from E)
  Case $opcode_D$
    JAL ⇒ pc + imm (from D)
    JALR ⇒ rs1 + imm (from D)
    ... ⇒ pc+4

pc+4 is a speculative guess

nop ⇒ Kill
pc+imm /rs1+imm⇒ Restart
pc+4 ⇒ Speculate

Branch Pipeline Diagrams
(resolved in execute stage)

	time t0	t1	t2	t3	t4	t5	t6	t7	. . . .
(I_1) 096: ADD	IF_1	ID_1	EX_1	MA_1	WB_1				
(I_2) 100: BEQ a1 a2 200		IF_2	ID_2	EX_2	MA_2	WB_2			
(I_3) 104: ADD			IF_3	ID_3	nop	nop	nop		
(I_4) 108:				IF_4	nop	nop	nop	nop	
(I_5) 304: ADD					IF_5	ID_5	EX_5	MA_5	WB_5

Resource Usage Diagram

	time t0	t1	t2	t3	t4	t5	t6	t7	. . . .
IF	I_1	I_2	I_3	I_4	I_5				
ID		I_1	I_2	I_3	nop	I_5			
EX			I_1	I_2	nop	nop	I_5		
MA				I_1	I_2	nop	nop	I_5	
WB					I_1	I_2	nop	nop	I_5

nop $\Rightarrow$ *pipeline bubble*

Reducing Branch Penalty (resolve in decode stage)

- One pipeline bubble can be removed if an extra comparator is used in the Decode stage

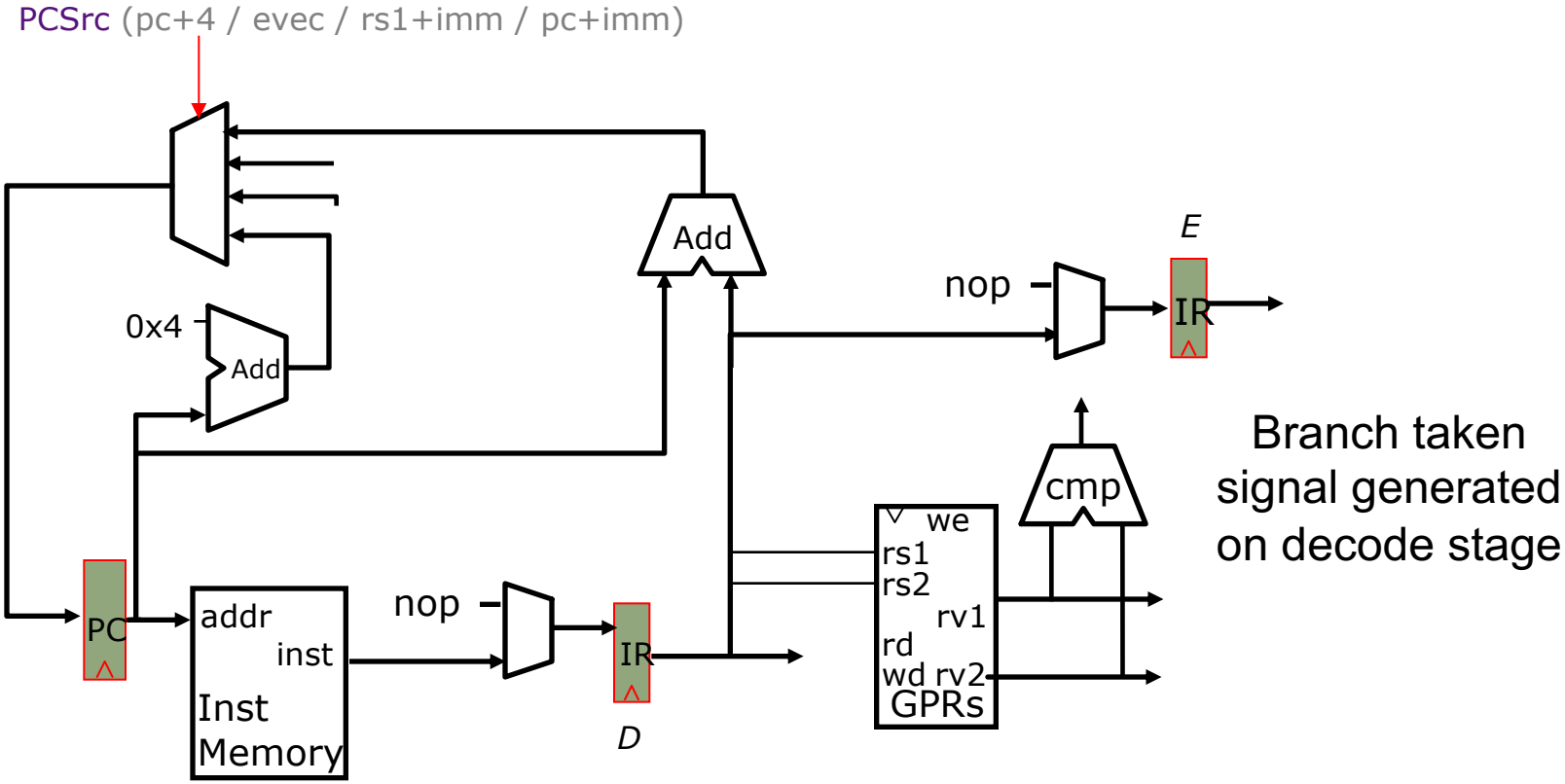

Pipeline diagram now same as for jumps

Branch Delay Slots
(expose control hazard to software)

- Change the ISA semantics so that the instruction that follows a jump or branch is always executed
  - gives compiler the flexibility to put in a useful instruction where normally a pipeline bubble would have resulted.

I_1	096	ADD
I_2	100	BEQ a1 a2 200
I_3	104	ADD ←
I_4	304	ADD

Delay slot instruction executed regardless of branch outcome

- Other techniques include branch prediction, which can dramatically reduce the branch penalty... *to come later*

Handling Control Hazards due to Exceptions

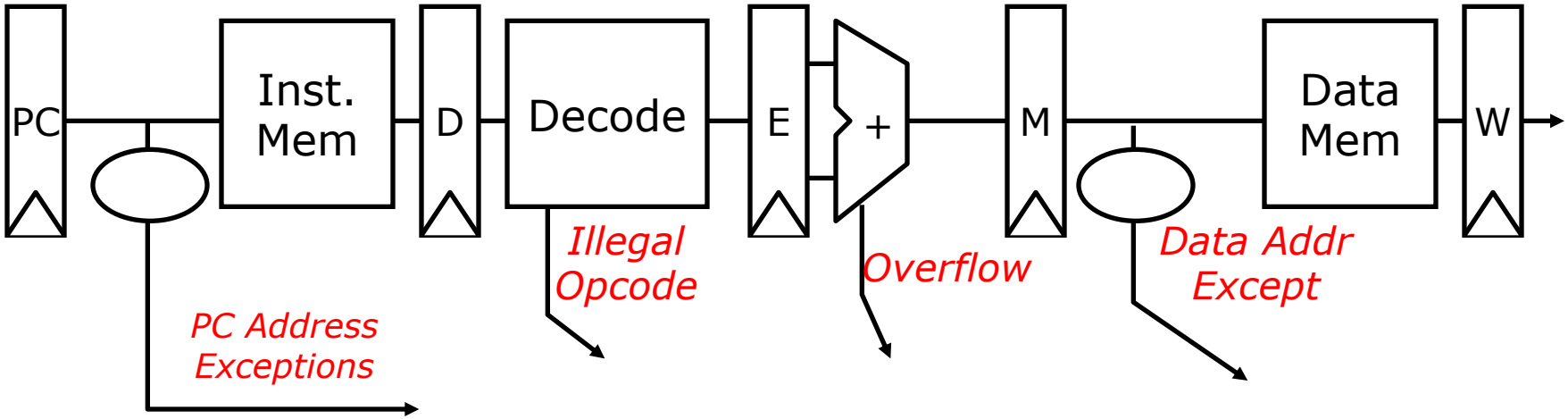

- Instructions may suffer exceptions in different pipeline stages
- Must prioritize exceptions from earlier instructions

Handling Control Hazards due to Exceptions

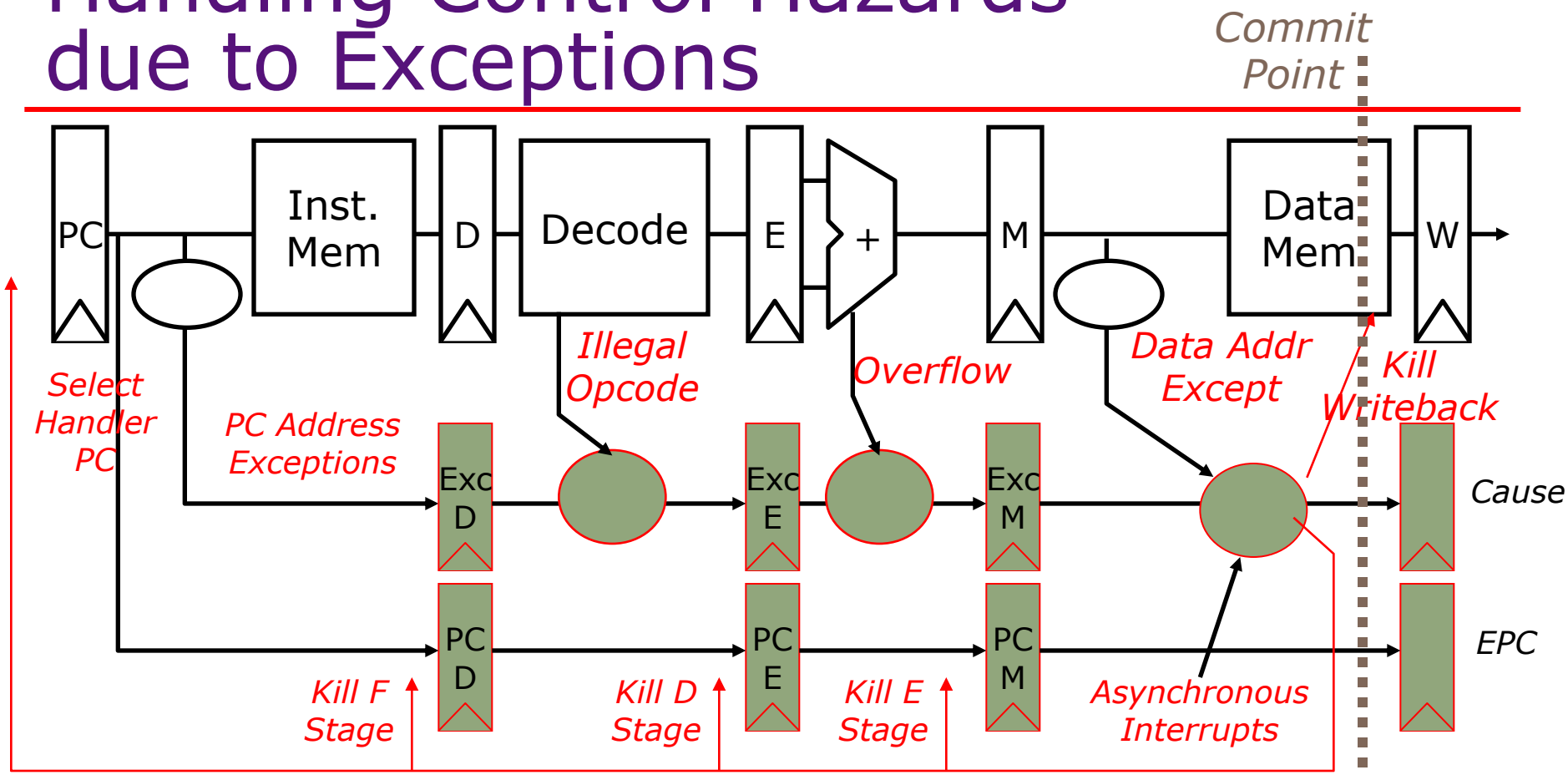

- Typical strategy: Record exceptions, process the first one to reach commit point (i.e., the point where architectural state is modified)
  - *Pros/cons vs handling exceptions eagerly, like branches?*

Why an instruction may not be dispatched every cycle (CPI>1)

- Full bypassing may be too expensive to implement
  - Typically, all frequently used paths are provided
  - Some infrequently used bypass paths may increase cycle time and counteract the benefit of reducing CPI
- Loads have two-cycle latency
  - Instruction after load cannot use load result
  - MIPS-I ISA defined *load delay slots*, a software-visible pipeline hazard (compiler schedules independent instruction or inserts NOP to avoid hazard). Removed in MIPS-II.
- Conditional branches, jumps, and exceptions may cause bubbles
  - Kill instruction(s) following branch (if no delay slots, as in MIPS)

Machines with software-visible delay slots may execute significant number of NOP instructions inserted by the compiler

Next lecture: Superscalar & Scoreboarded Pipelines