Branch Prediction

Joel Emer
Computer Science and Artificial Intelligence Laboratory
M.I.T.

Reminder: Phases of Instruction Execution

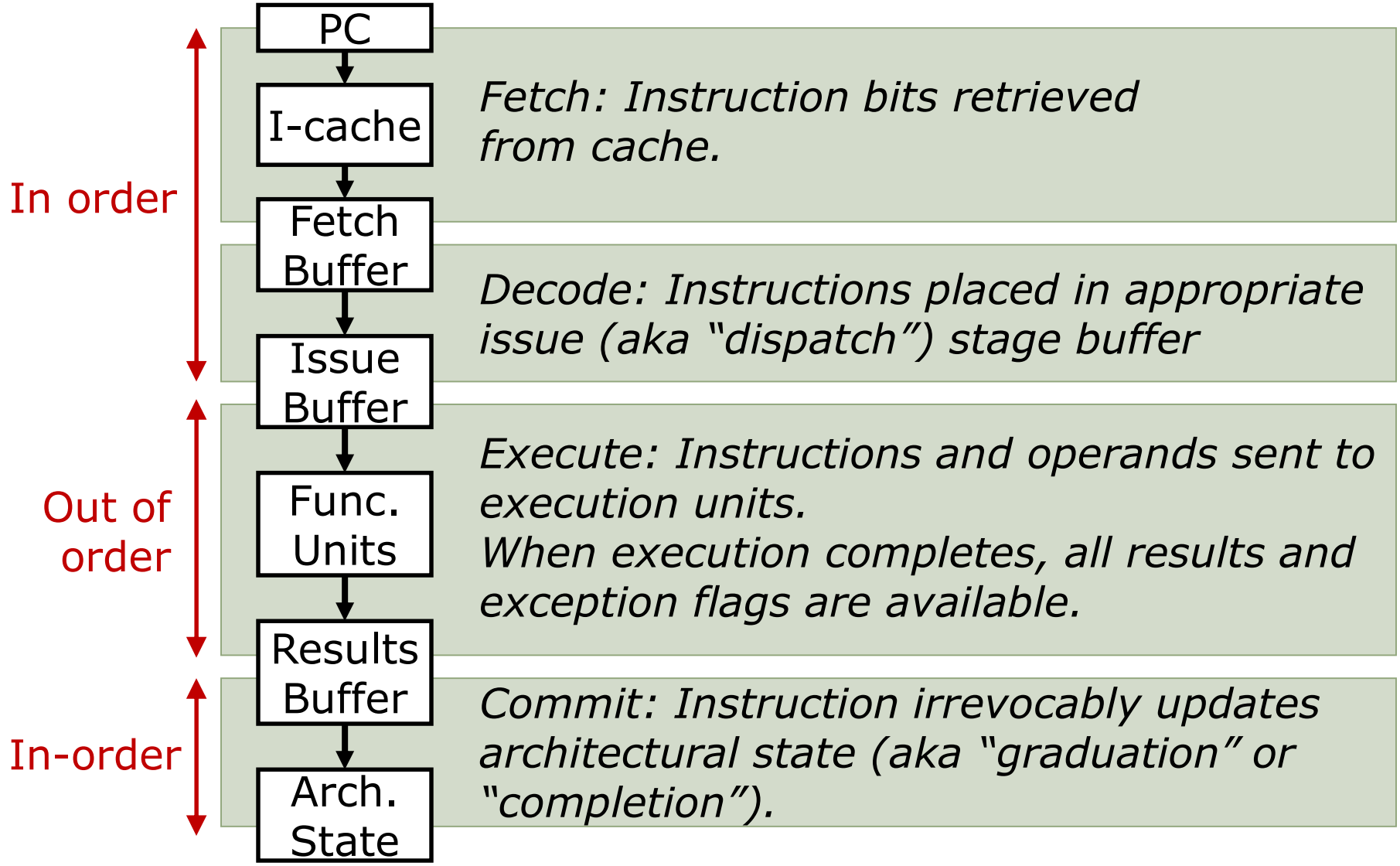

Control Flow Penalty

Modern processors may have > 10 pipeline stages between next PC calculation and branch resolution!

How much work is lost if pipeline doesn't follow correct instruction flow?

~ Loop length x pipeline width

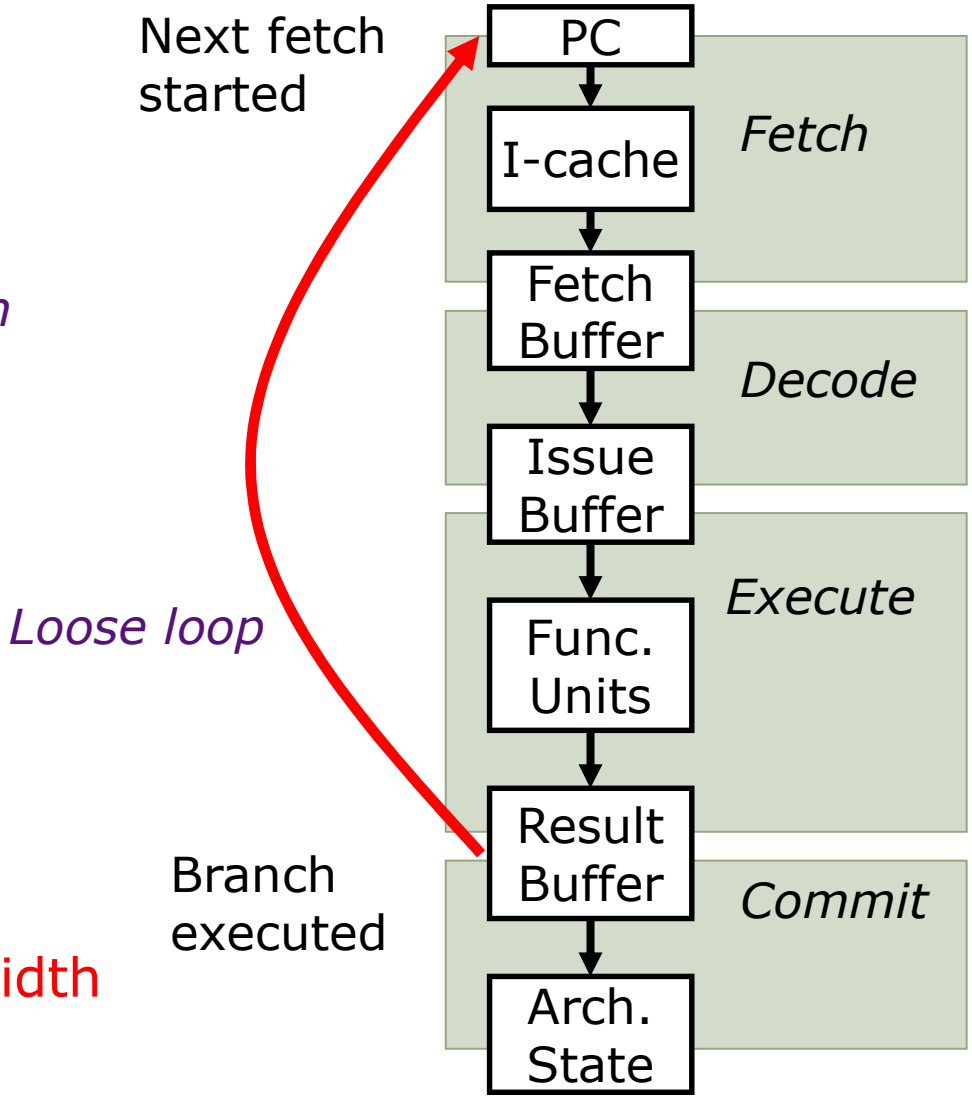

Average Run-Length between Branches

Average dynamic instruction mix of SPEC CPU 2017 [Limaye and Adegbiya, ISPASS'18]:

	SPECint	SPECfp
Branches	19 %	11 %
Loads	24 %	26 %
Stores	10 %	7 %
Other	47 %	56 %

SPECint17: *perlbench, gcc, mcf, omnetpp, xalancbmk, x264, deepsjeng, leela, exchange2, xz*
SPECfp17: *bwaves, cactus, lbm, wrf, pop2, imagick, nab, fotonik3d, roms*

What is the average run length *between branches?*

Roughly 5-10 instructions

RISC-V Branches and Jumps

Each instruction fetch depends on one or two pieces of information from the preceding instruction:

1) Is the preceding instruction a taken branch?

2) If so, what is the target address?

Instruction	*Taken known?*	*Target known?*
JAL	After Inst. Decode	After Inst. Decode
JALR	After Inst. Decode	After Reg. Fetch
BRANCH (e.g., BLT)	After Inst. Execute	After Inst. Decode

Example Branch Penalties

UltraSPARC-III instruction fetch pipeline stages
(in-order issue, 4-way superscalar, 750MHz, 2000)

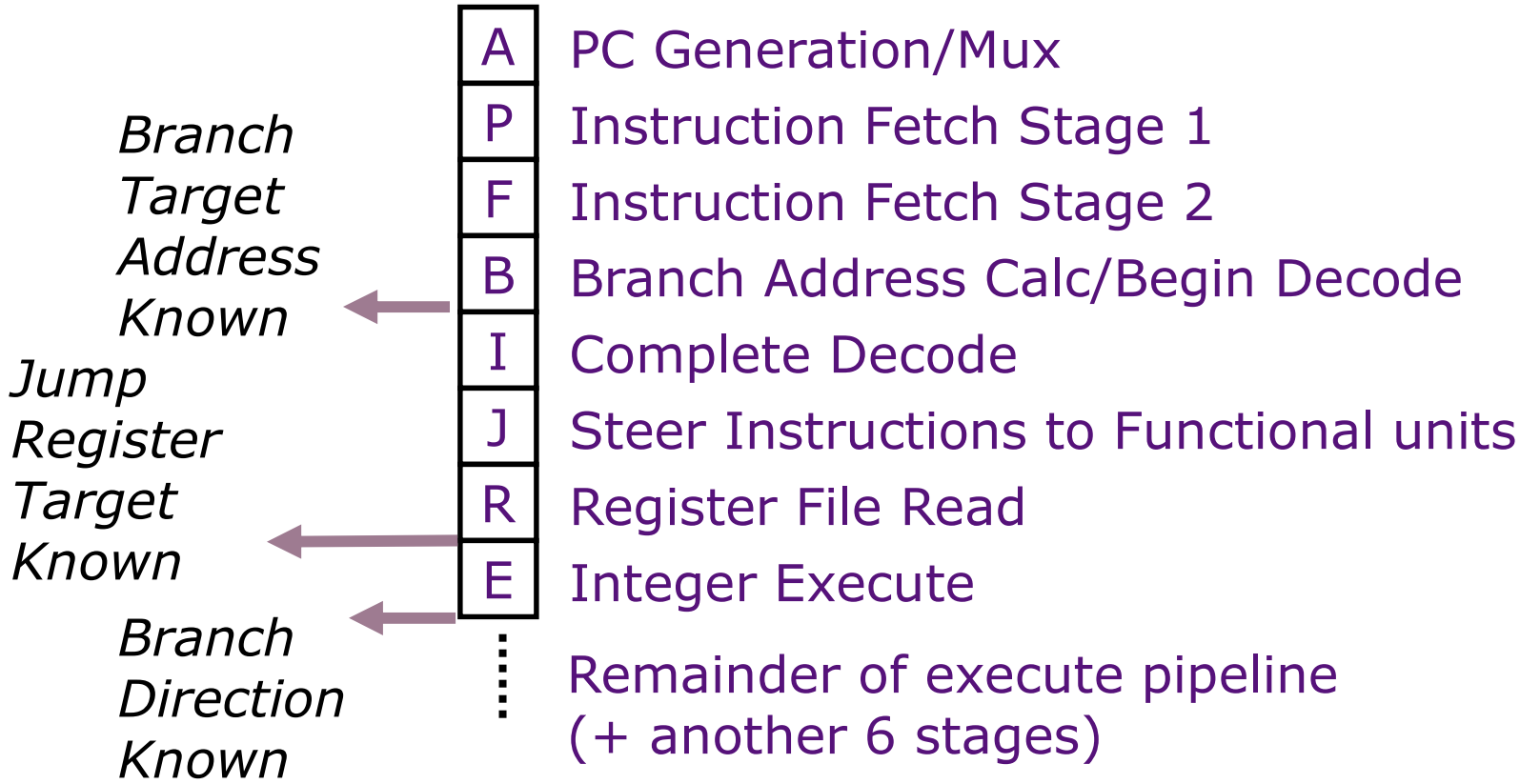

Reducing Control Flow Penalty

- Software solutions
  - *Eliminate branches – loop unrolling*

    Increases run length between branches
  - *Reduce resolution time – instruction scheduling*

    Compute the branch condition as early as possible (of limited value)

Reducing Control Flow Penalty

- Software solutions

"Then don't do that."

Source: New Yorker

Reducing Control Flow Penalty

- Software solutions
  - *Eliminate branches – loop unrolling*

    Increases run length between branches
  - *Reduce resolution time – instruction scheduling*

    Compute the branch condition as early as possible (of limited value)

- Hardware solutions
  - Bypass – usually results are used immediately
  - Change architecture – find something else to do

    Delay slots – replace pipeline bubbles with useful work (requires software cooperation)
  - *Speculate (accurately) – branch prediction*

    Speculative execution of instructions beyond the branch

Branch Prediction

Motivation:

Branch penalties limit performance of deeply pipelined processors

Modern branch predictors have high accuracy (>95%) and can reduce branch penalties significantly

Required hardware support:

Prediction structures:

- Branch history tables, branch target buffers, etc.

Mispredict recovery mechanisms:

- *Keep result computation separate from commit*
- Kill instructions following branch in pipeline
- Restore state to state following branch

Static Branch Prediction

Overall probability a branch is taken is ~60-70% but:

backward 90%

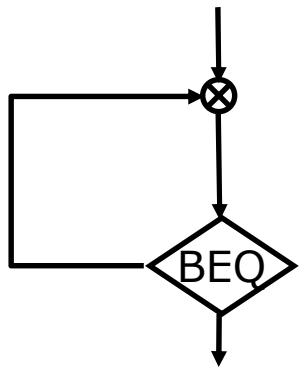

forward 50%

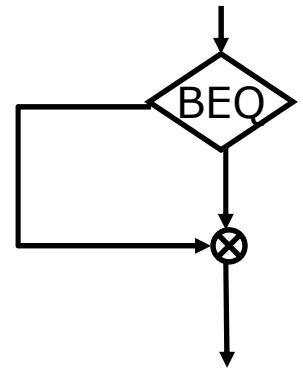

ISA can attach preferred direction semantics to branches, e.g., Motorola MC88110

bne0 *(preferred taken)* beq0 *(not taken)*

ISA can allow arbitrary choice of statically predicted direction, e.g., HP PA-RISC, Intel IA-64

typically reported as ~80% accurate

Dynamic Prediction

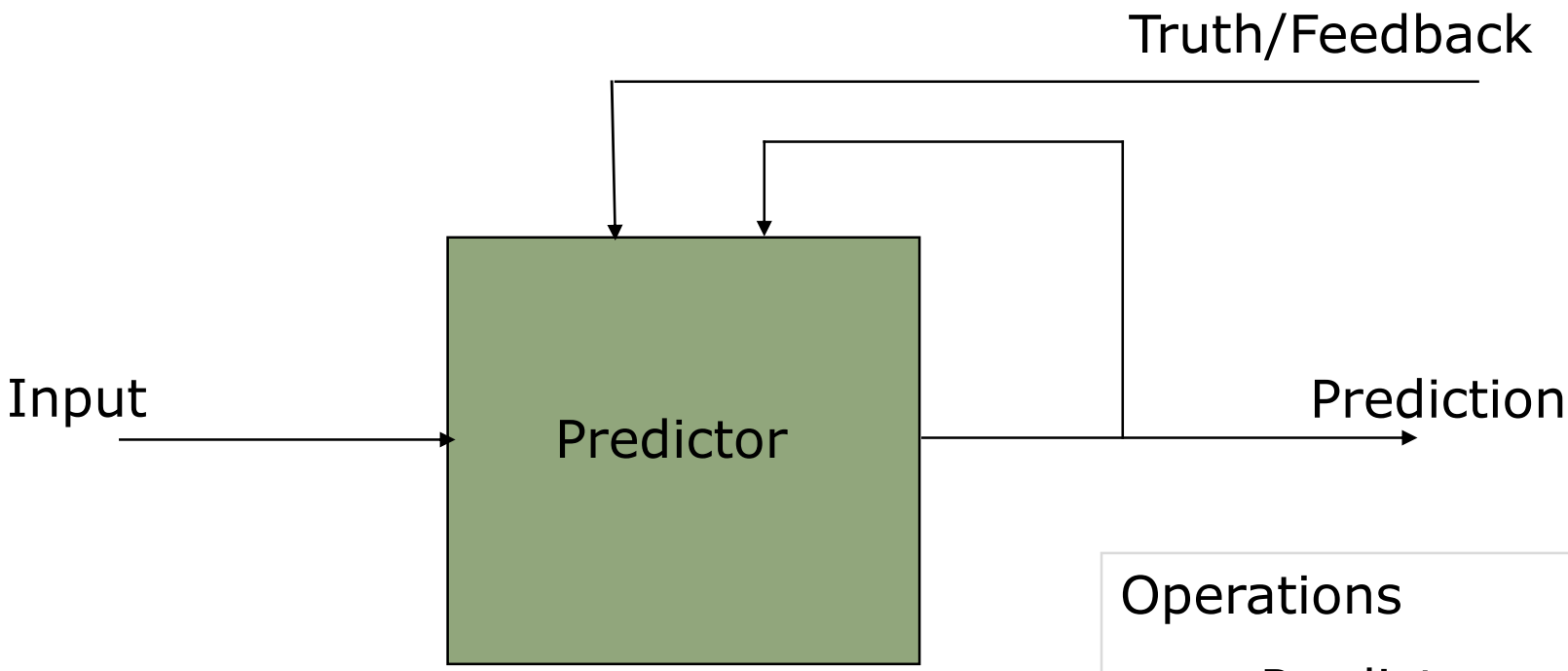

Operations

- Predict
- Update

Prediction as a feedback control process

Dynamic Branch Prediction

Learning based on past behavior

Temporal correlation

The way a branch resolves may be a good predictor of the way it will resolve at the next execution

Spatial correlation

Several branches may resolve in a highly correlated manner *(a preferred path of execution)*

Predictor Primitive
Emer & Gloy, 1997

- Indexed table holding values
- Operations
  - Predict
  - Update

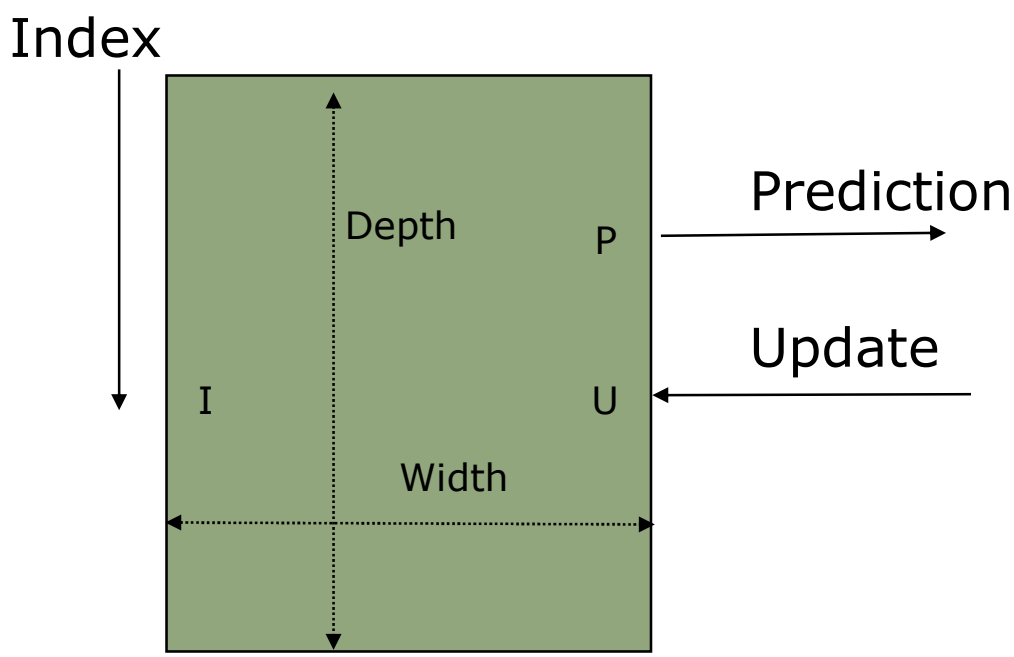

- Algebraic notation

Prediction = P[Width, Depth](Index; Update)

One-bit Predictor
aka Branch History Table (BHT)

Simple temporal prediction

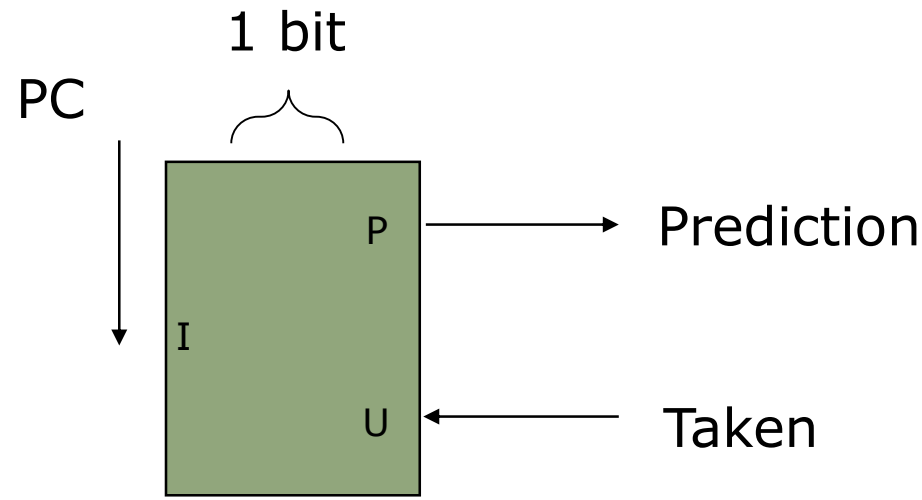

A21064(PC; T) = P[1, 2K](PC; T)

What happens on loop branches?

At best, mispredicts twice for every use of loop

Why not use tags to identify the branch?

Uses a lot of space

Two-bit Predictor
Smith, 1981

- Use two bits per entry instead of one bit
- Manage them as a saturating counter:

On not-taken ↓	↑ On taken	1	1	Strongly taken
		1	0	Weakly taken
		0	1	Weakly not-taken
		0	0	Strongly not-taken

  – Direction prediction changes only after two wrong predictions

How do we tell if we should predict taken or not? MSB

How many mispredictions per loop? 1

2-Bit Counter

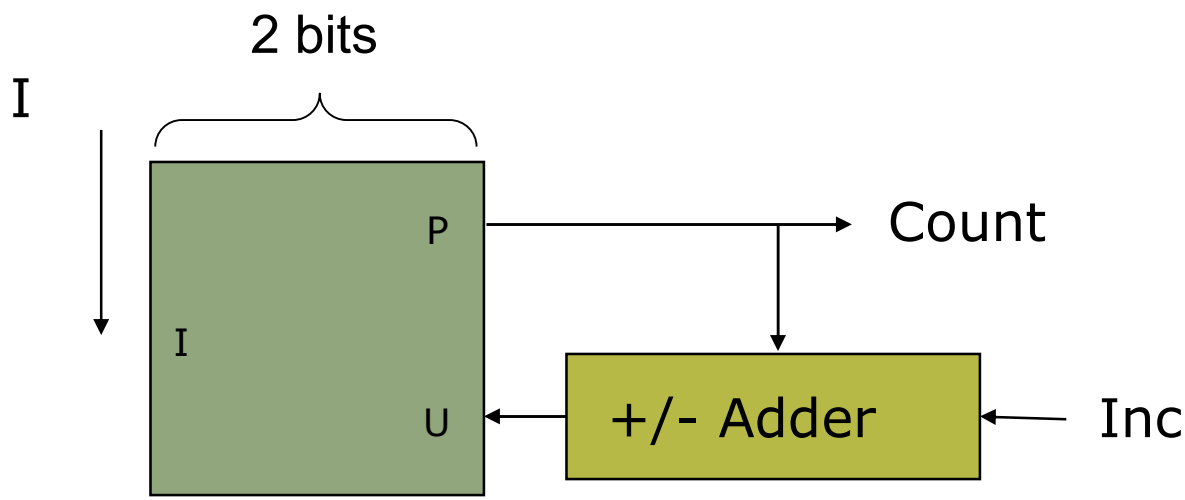

Counter[W,D](I; INC) = P[W, D](I; if INC then P+1 else P-1)

Two-bit Predictor
Smith, 1981

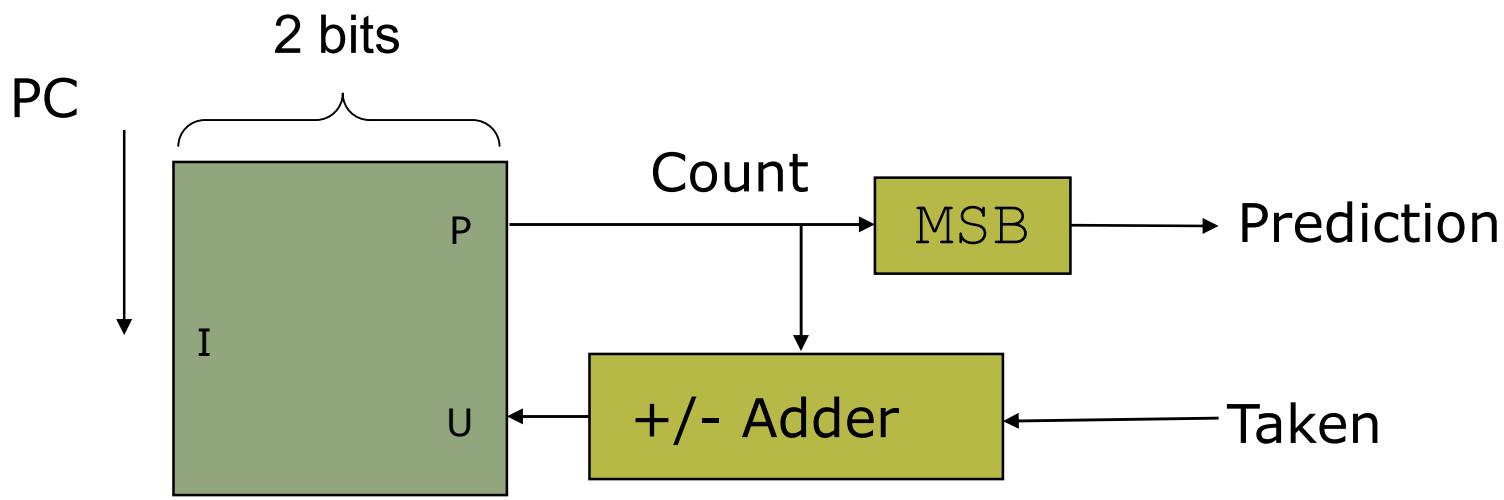

Counter[W,D](I; INC) = P[W, D](I; if INC then P+1 else P-1)

A21164(PC; T) = MSB(Counter[2, 2K](PC; T))

AKA: "Bimodal predictor" or "Branch History Table (BHT)"

Branch History Table

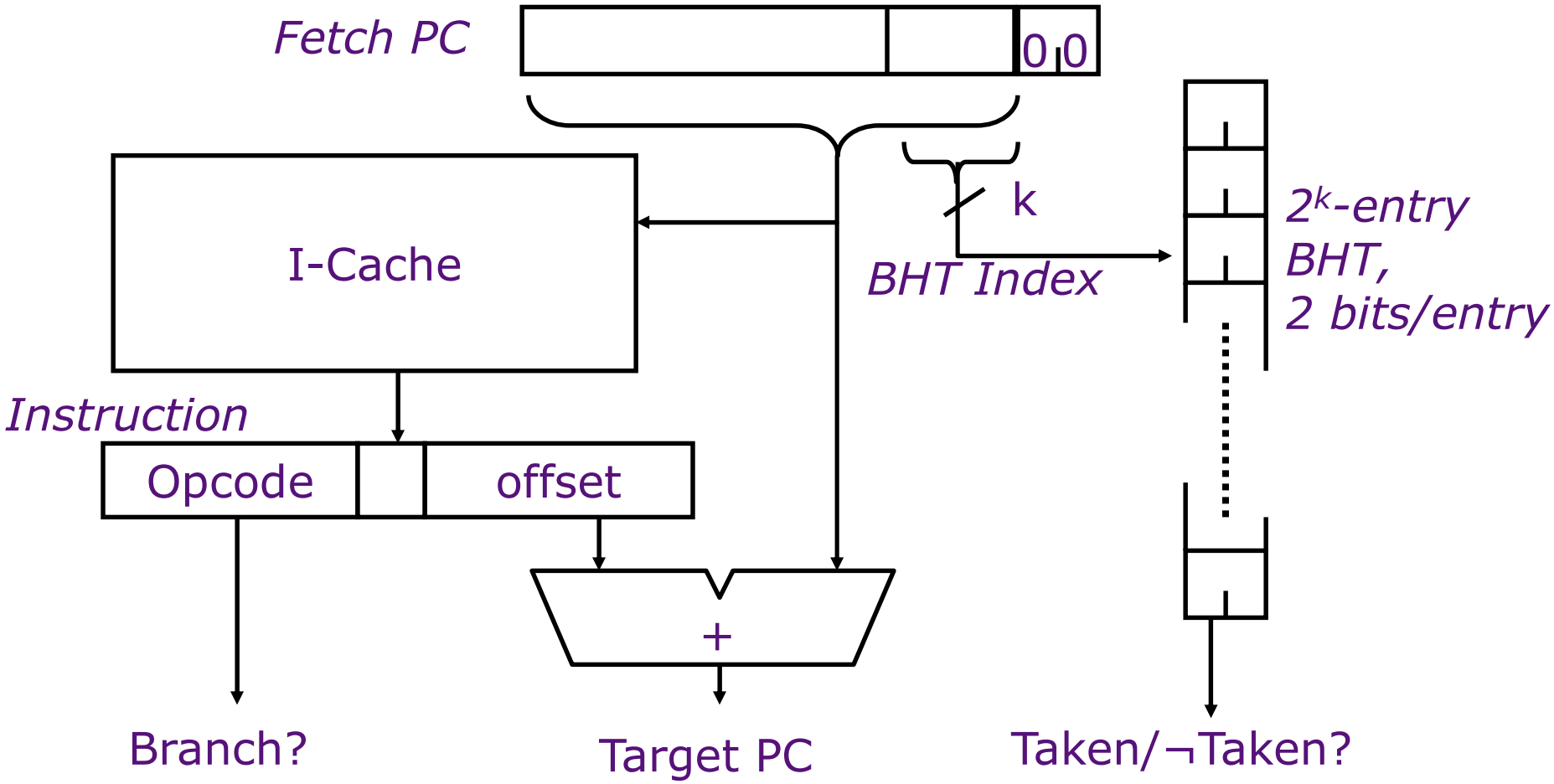

4K-entry BHT, 2 bits/entry, ~80-90% correct predictions

Exploiting Spatial Correlation

Yeh and Patt, 1992

```
if (x[i] < 7) then
      y += 1;
if (x[i] < 5) then
      c -= 4;
```

If first condition false, second condition also false

History register records the direction of the last N branches executed by the processor

History Registers
aka Pattern History Table (PHT)

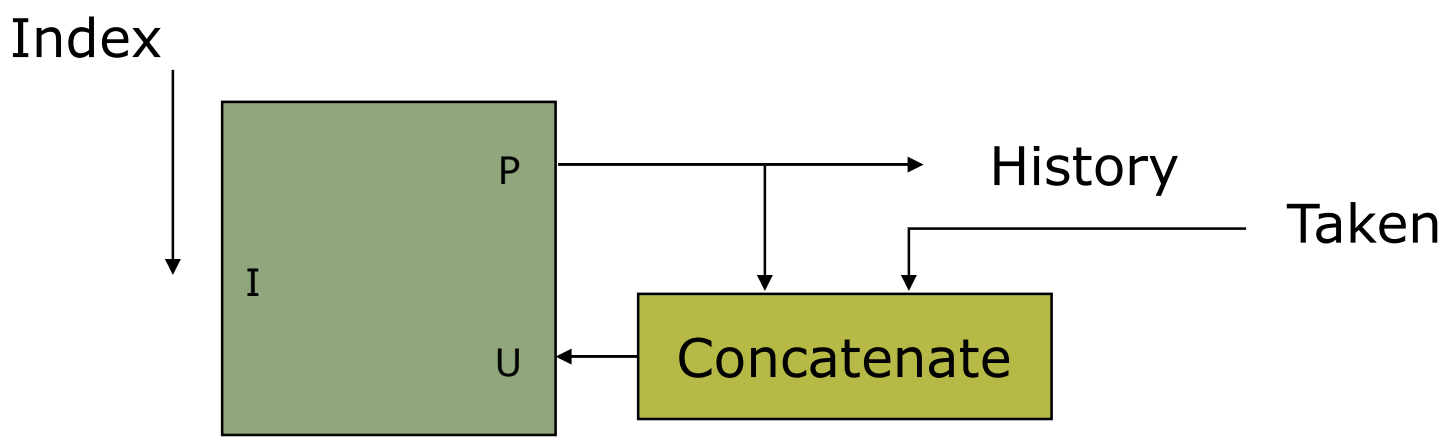

History(Index; T) = P(Index; P || T)

What is predicted history for sequence "01010101"?

"10101010"

What is taken prediction for that predicted history?

rightmost bit

Global-History Predictor

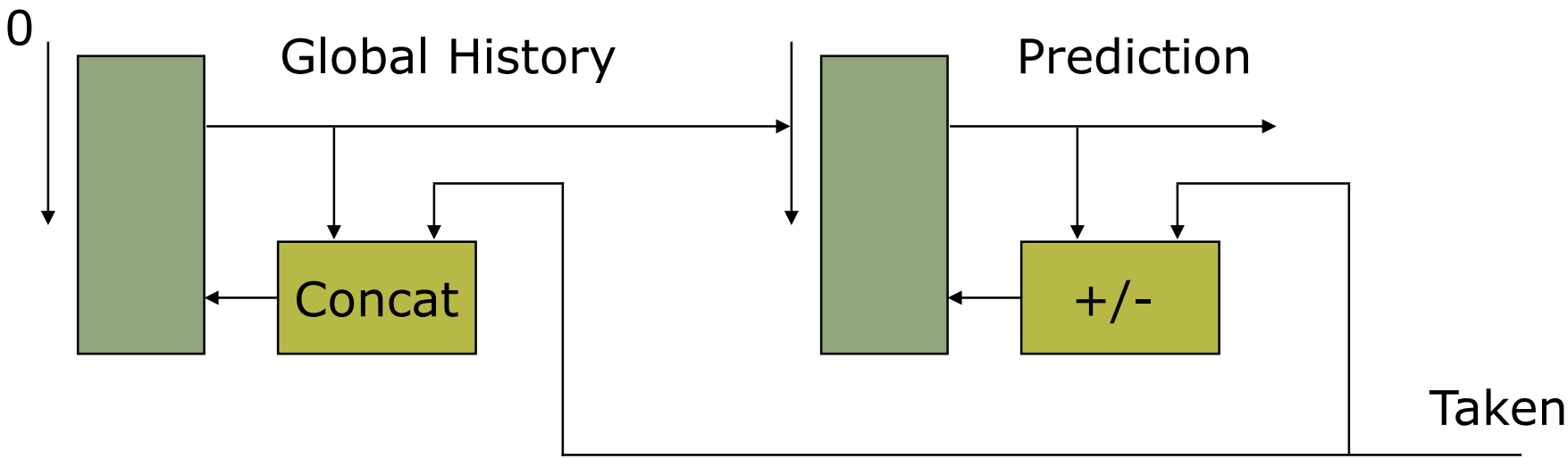

GHist(;T) = MSB(Counter(History(0, T); T))

Can we take advantage of a pattern at a particular PC?

Local-History Predictor

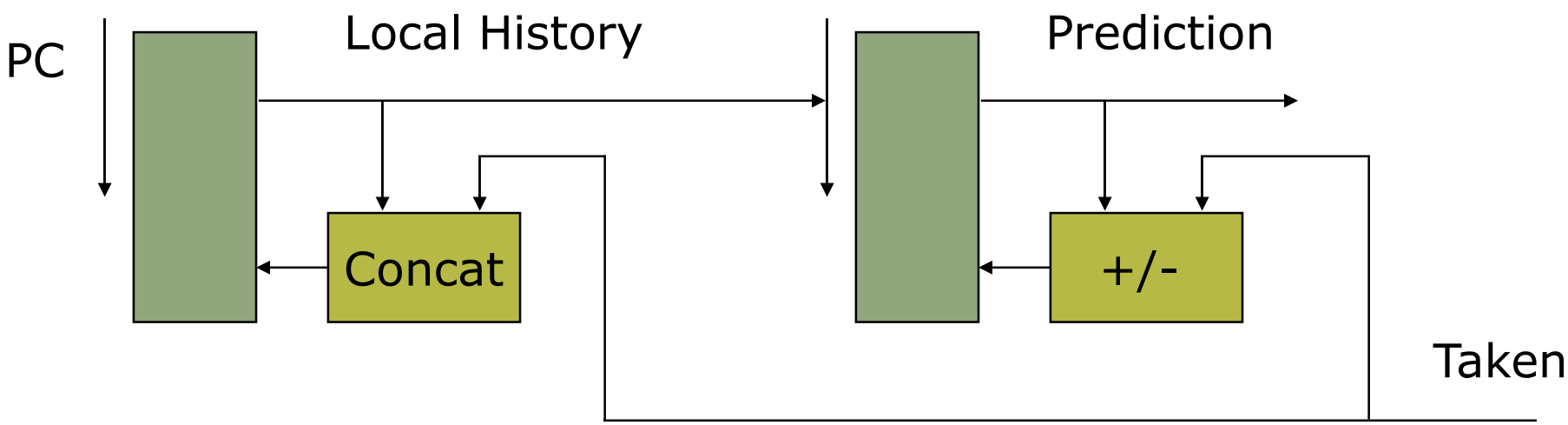

LHist(PC; T) = MSB(Counter(History(PC; T); T))

Can we take advantage of the global pattern at a particular PC?

Global-History Predictor with Per-PC Counters

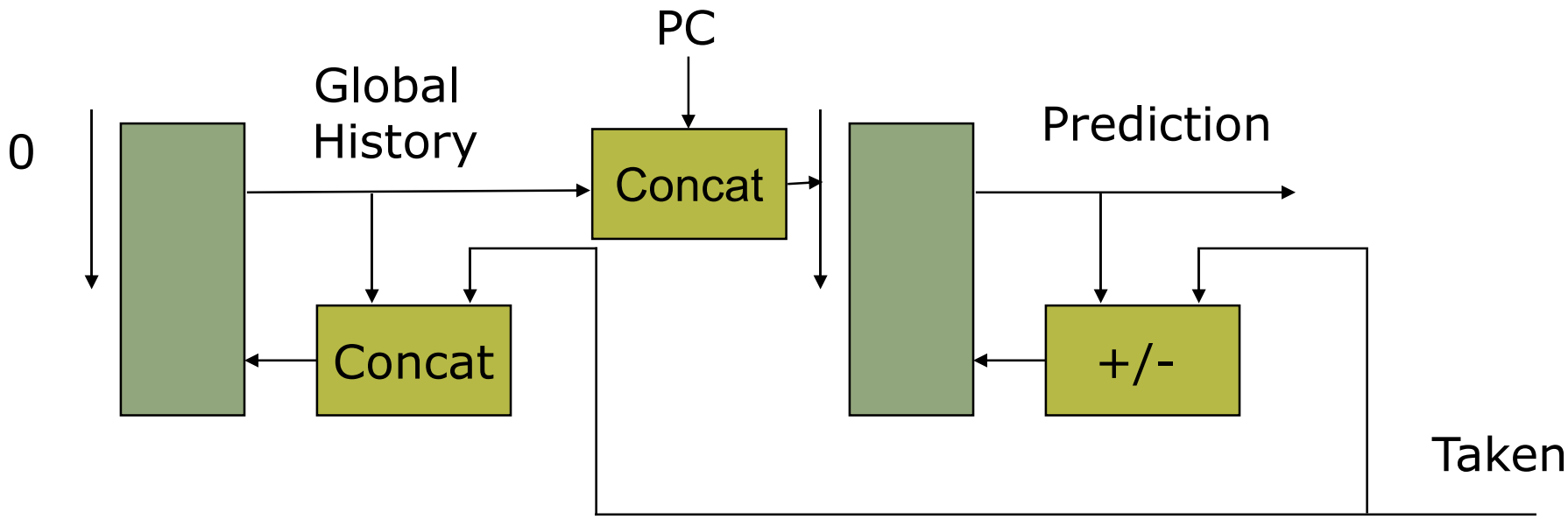

GHistPA(PC; T) = MSB(Counter(History(0; T)||PC; T))

GShare(PC; T) = MSB(Counter(History(0; T) ^ PC; T))

Two-Level Branch Predictor
(Pentium Pro, 1995)

Pentium Pro uses the result from the last two branches to select one of the four sets of BHT bits (~95% correct)

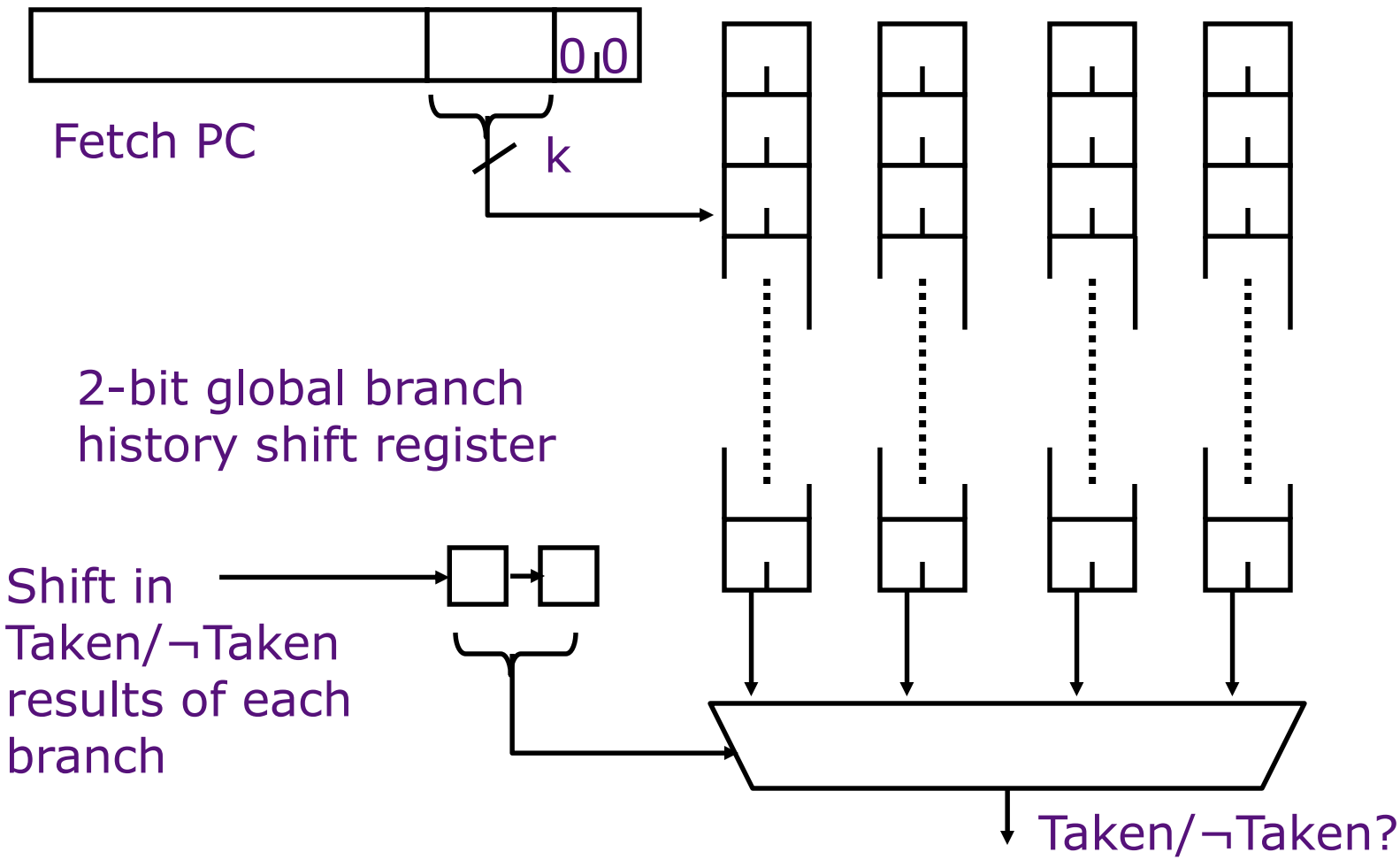

Choosing Predictors

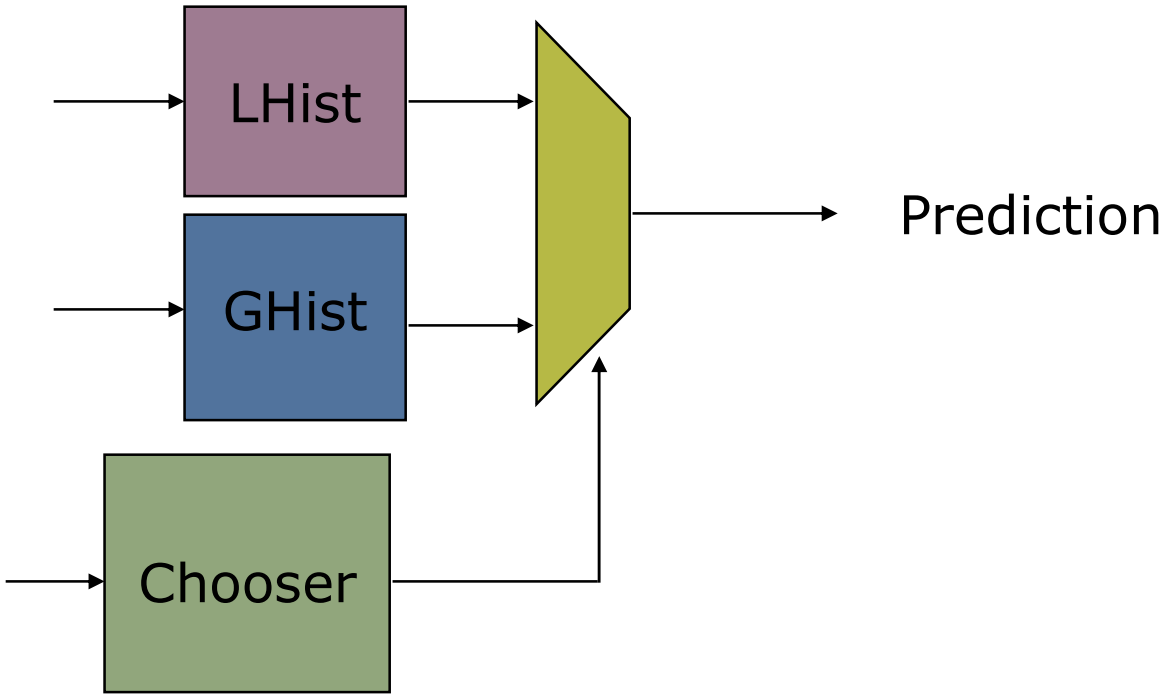

Chooser = MSB(P(PC; P + (A==T) - (B==T))

or

Chooser = MSB(P(GHist(PC; T); P + (A==T) - (B==T))

Tournament Branch Predictor
(Alpha 21264, 1996)

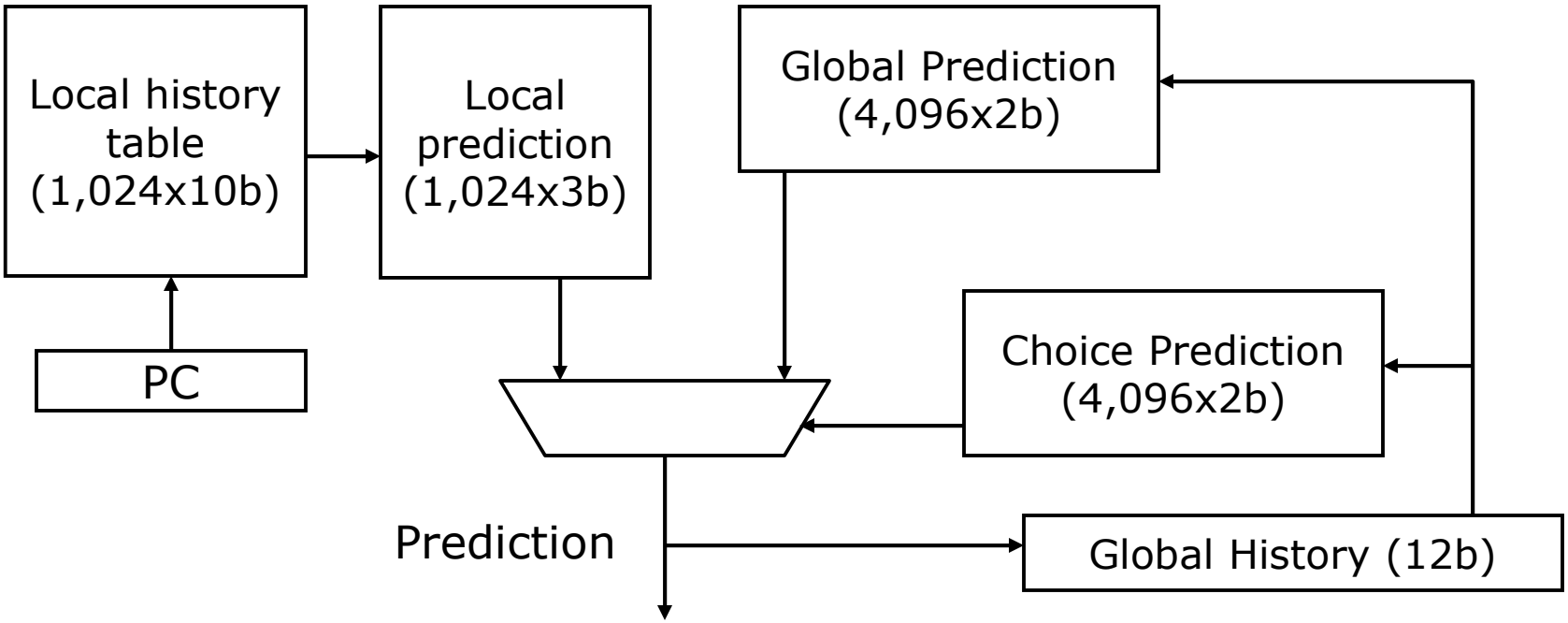

- Choice predictor learns whether best to use local or global branch history in predicting next branch
- Global history is speculatively updated but restored on mispredict
- Claim 90-100% success on range of applications

TAGE predictor
Seznec & Michaud, 2006

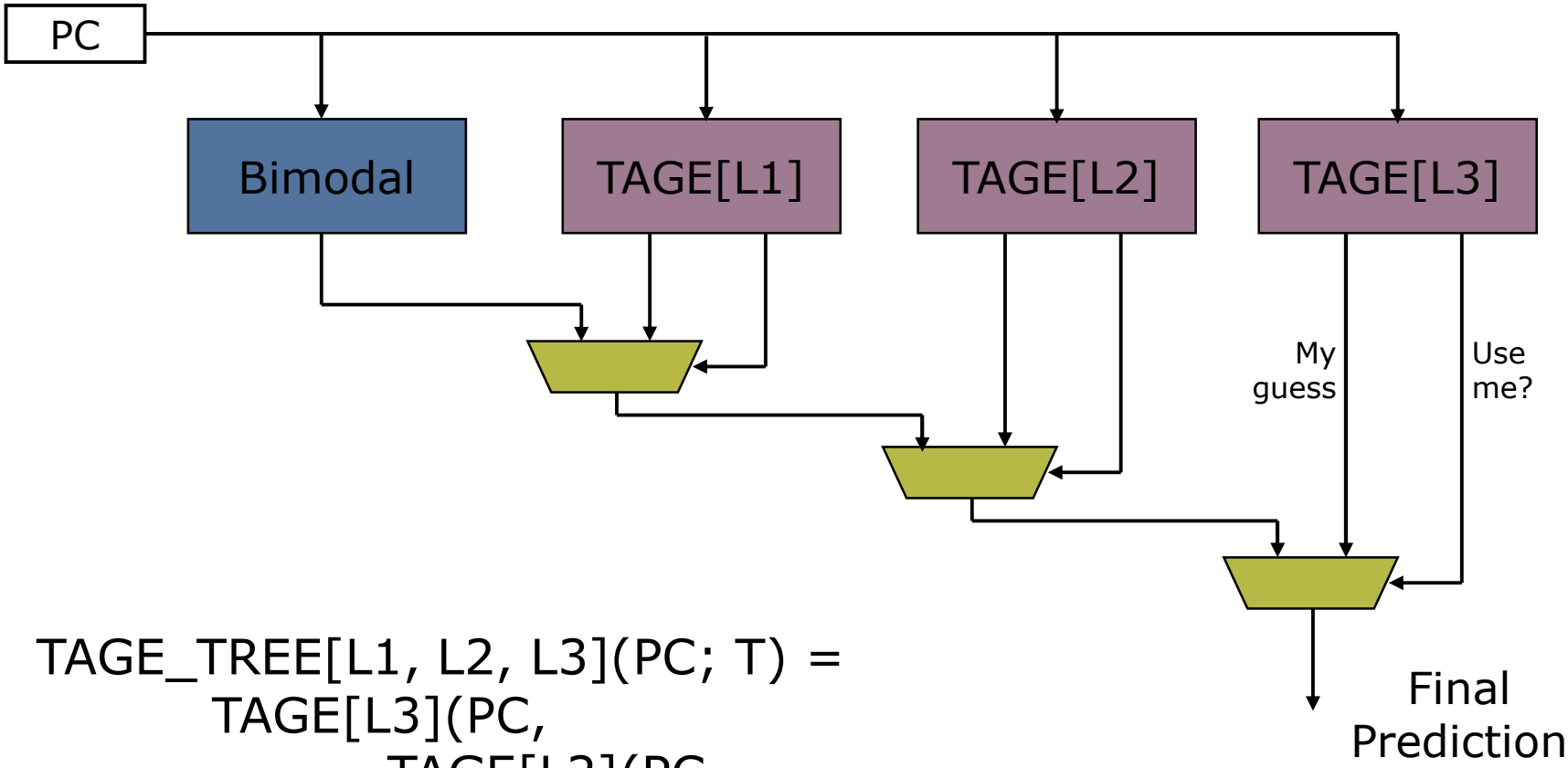


```
TAGE_TREE[L1, L2, L3](PC; T) =
        TAGE[L3](PC,
                TAGE[L2](PC,
                        TAGE[L1](PC, Bimodal(PC;T)
        ;T)     ;T      ;T)
```

TAGE component

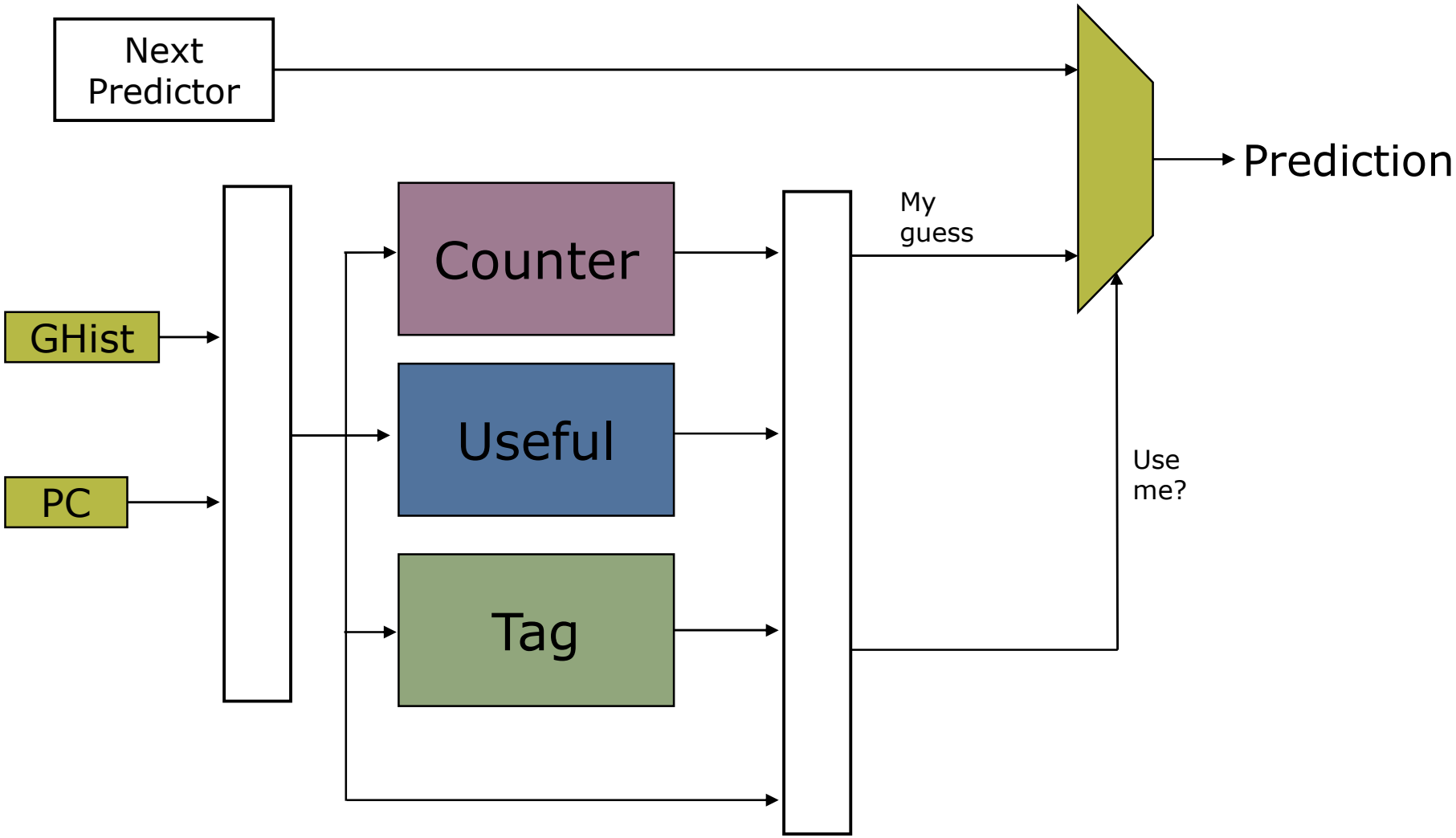

TAGE predictor component

```
TAGE[L](PC, NEXT; T) =

    idx = hash(PC, GHIST[L](;T))
    tag = hash'(PC, GHIST[L](;T))

    TAGE.U = SA(idx, tag; ((TAGE == T) && (NEXT != T))?1:SA)
    TAGE.Counter = SA(idx, tag; T?SA+1:SA-1)

    use_me = TAGE.U && isStrong(TAGE.Counter)
    TAGE = use_me?MSB(TAGE.Counter):NEXT
```

Notes:

- SA is a set-associative structure
- SA allocation occurs on mispredict (not shown)
- TAGE.U cleared on global counter saturation

Limitations of branch predictors

Only predicts branch direction. Therefore, cannot redirect fetch stream until after branch target is determined.

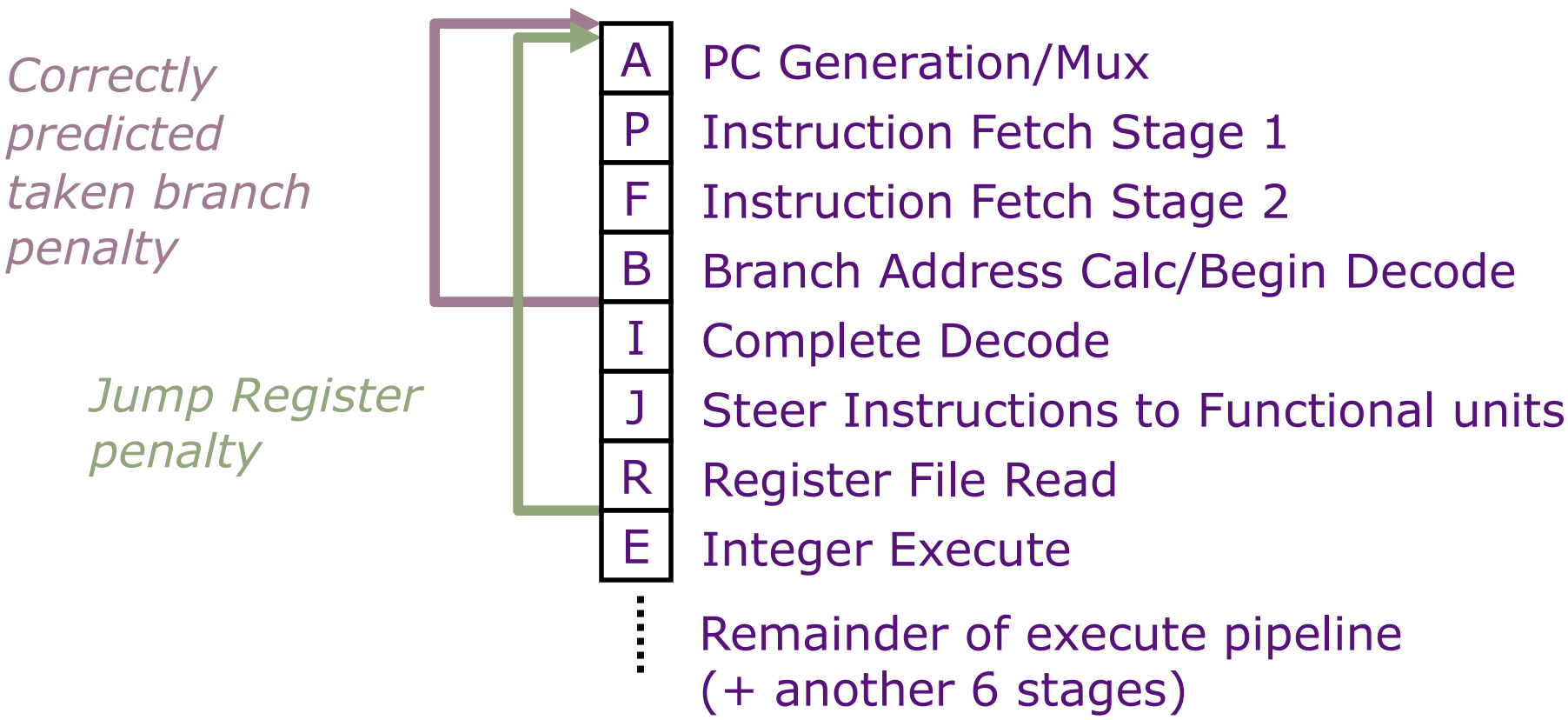

UltraSPARC-III fetch pipeline

Branch Target Buffer (untagged)

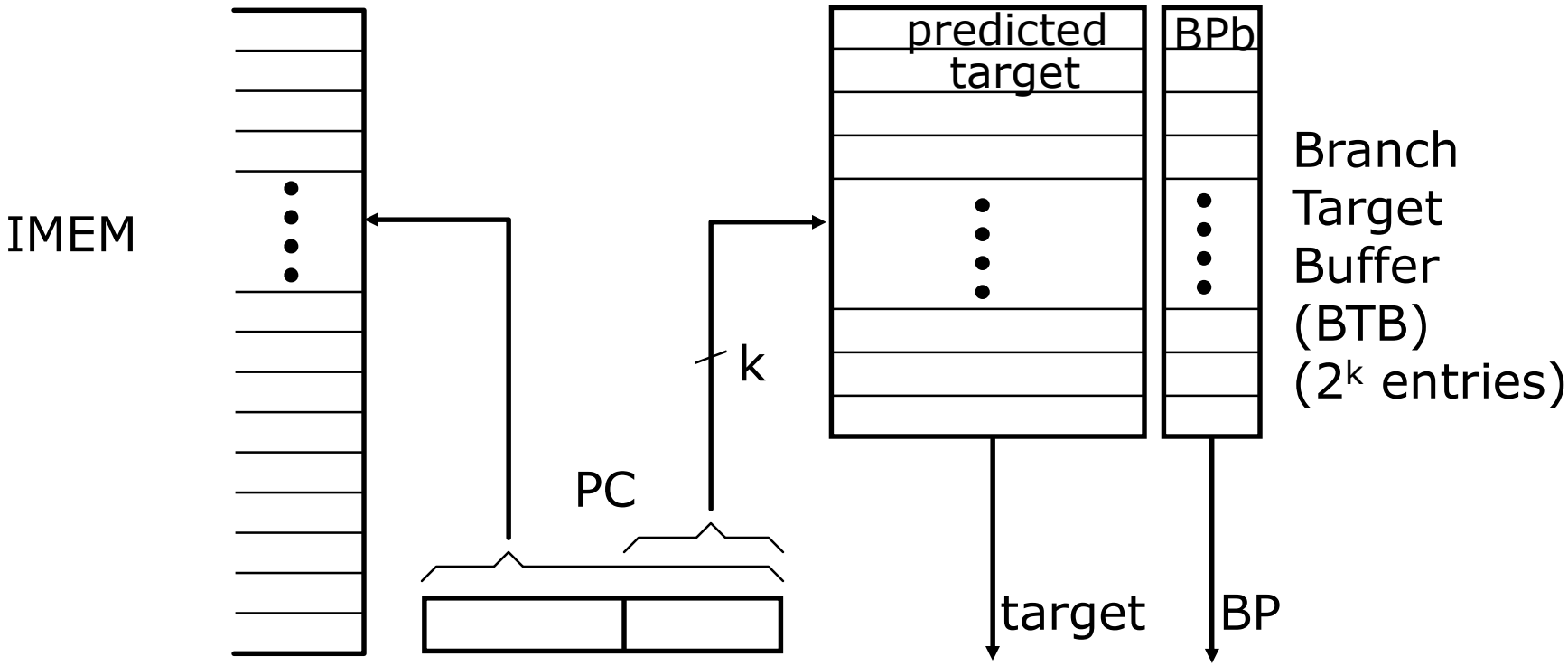

BP bits are stored with the predicted target address.

IF stage: *If (BP=taken) then nPC=target else nPC=PC+4*
later: *check prediction, if wrong then kill the instruction and update BTB & BPb, else update BPb*

Address Collisions

Assume a 128-entry BTB

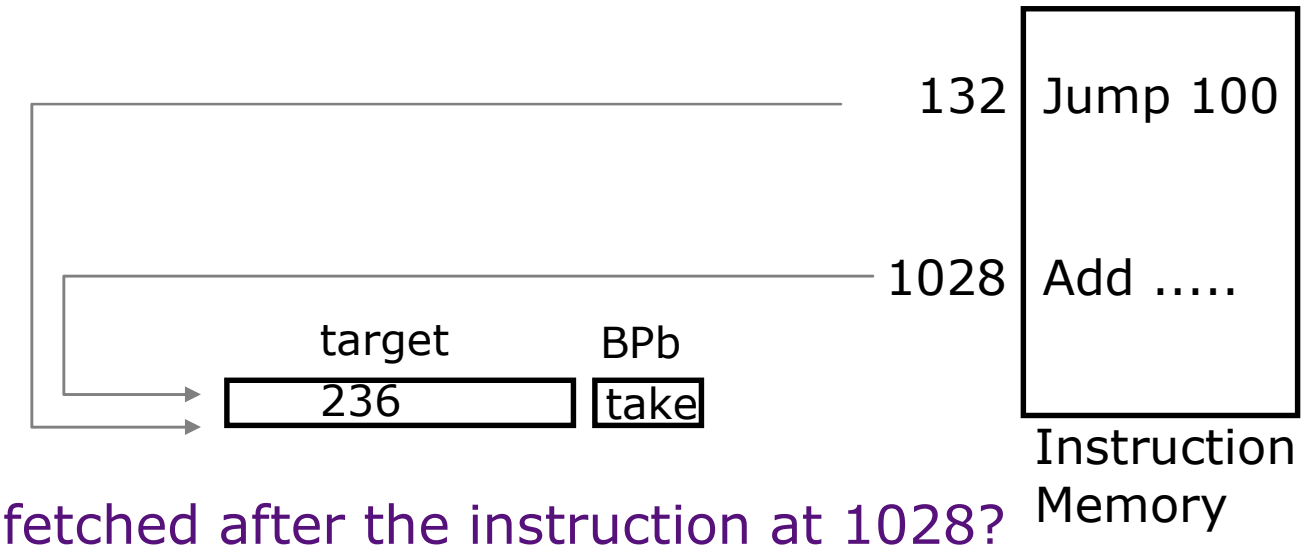

What will be fetched after the instruction at 1028?

BTB prediction = 236

Correct target = 1032

⇒ *kill* PC=236 and *fetch* PC=1032

Is this a common occurrence? Yes

Can we avoid these mispredictions? Yes

BTB is only for Control Instructions

BTB contains useful information for branch and jump instructions only

$\Rightarrow$ Do not update it for other instructions

For all other instructions the next PC is (PC)+4 !

How to achieve this effect without decoding the instruction?

Tag the entries in the table

Branch Target Buffer (tagged)

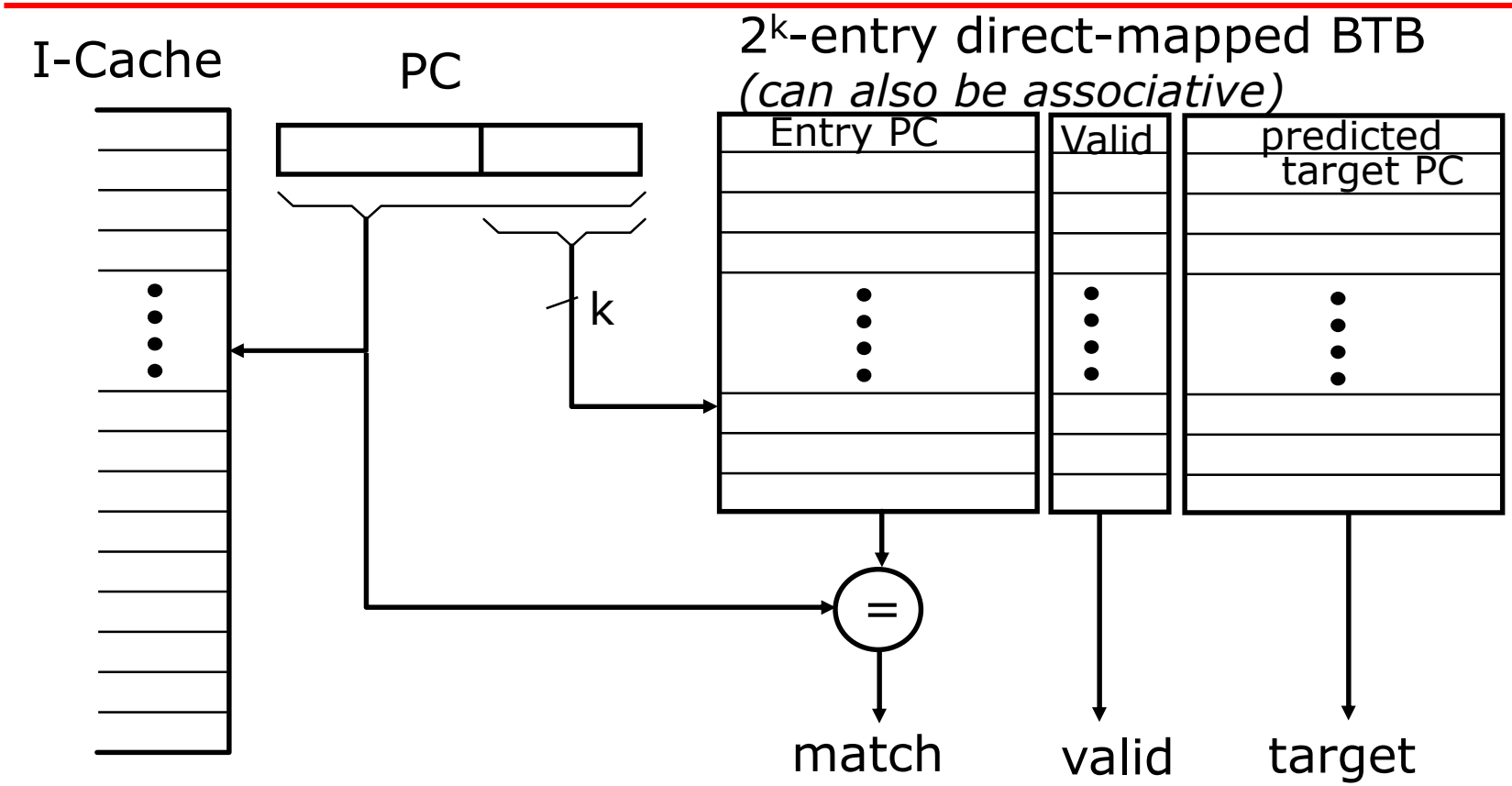

- Keep both the branch PC and target PC in the BTB
- PC+4 is fetched if match fails
- Only *taken* branches and jumps held in BTB
- Next PC determined *before* branch fetched and decoded

Consulting BTB Before Decoding

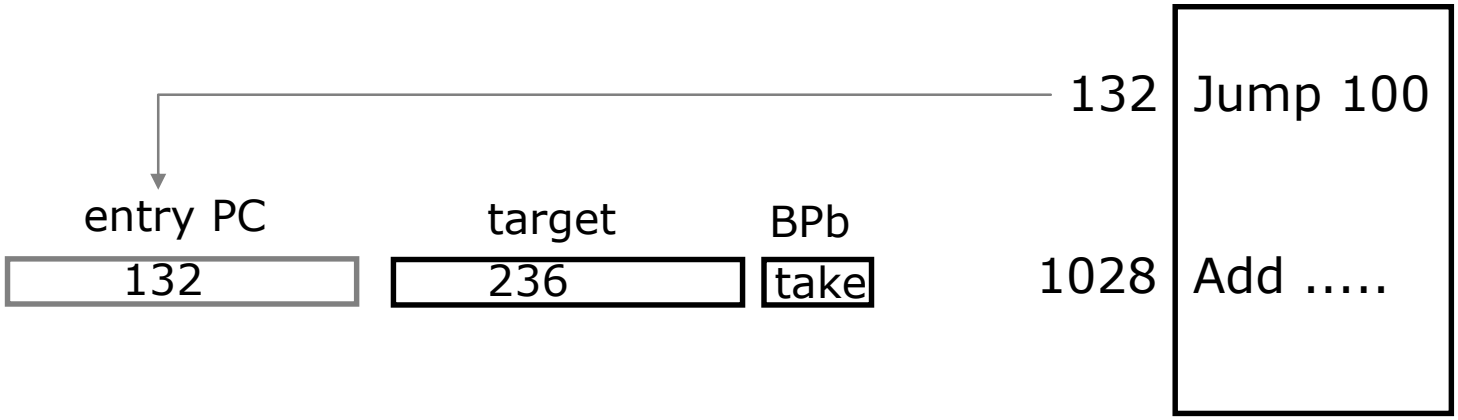

- The match for PC=1028 fails and 1028+4 is fetched
  $\Rightarrow$ *eliminates false predictions after ALU instructions*

- BTB contains entries only for control transfer instructions
  $\Rightarrow$ *more room to store branch targets*

Combining BTB and BHT

- BTB entries are considerably more expensive than BHT, but can redirect fetches at earlier stage in pipeline and can accelerate indirect branches (JALR)
- BHT can hold many more entries and is more accurate

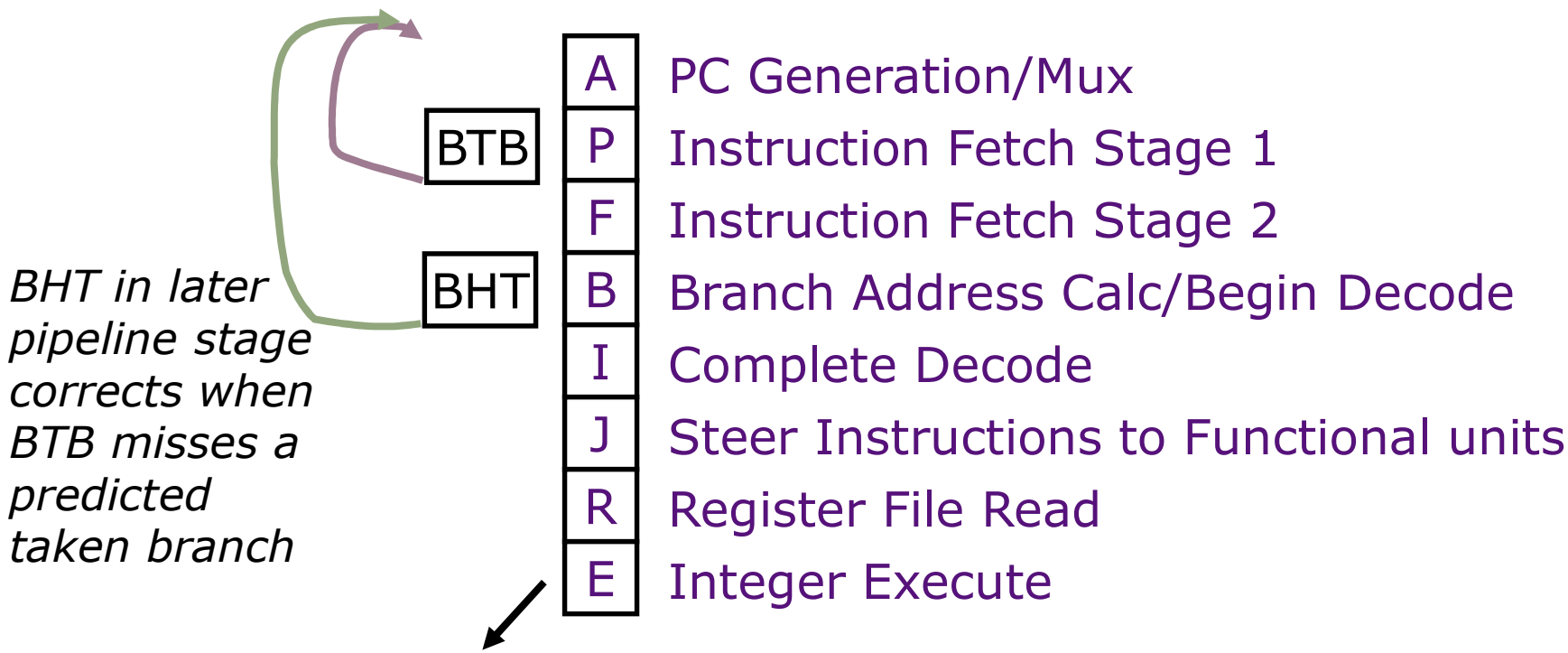

BTB/BHT only updated after branch resolves in E stage

Uses of Jump Register (JALR)

- Switch statements (jump to address of matching case)

  BTB works well if same case used repeatedly

- Dynamic function call (jump to run-time function address)

  BTB works well if same function usually called, (e.g., in C++ programs, when objects have same type in virtual function call)

- Subroutine returns (jump to return address)

  BTB works well if usually return to the same place

  ⇒ *Often one function called from many distinct call sites!*

How well does BTB work for each of these cases?

Subroutine Return Stack

Small structure to accelerate JR for subroutine returns, typically much more accurate than BTBs.

```
fa() { fb(); }

fb() { fc(); }

fc() { fd(); }
```

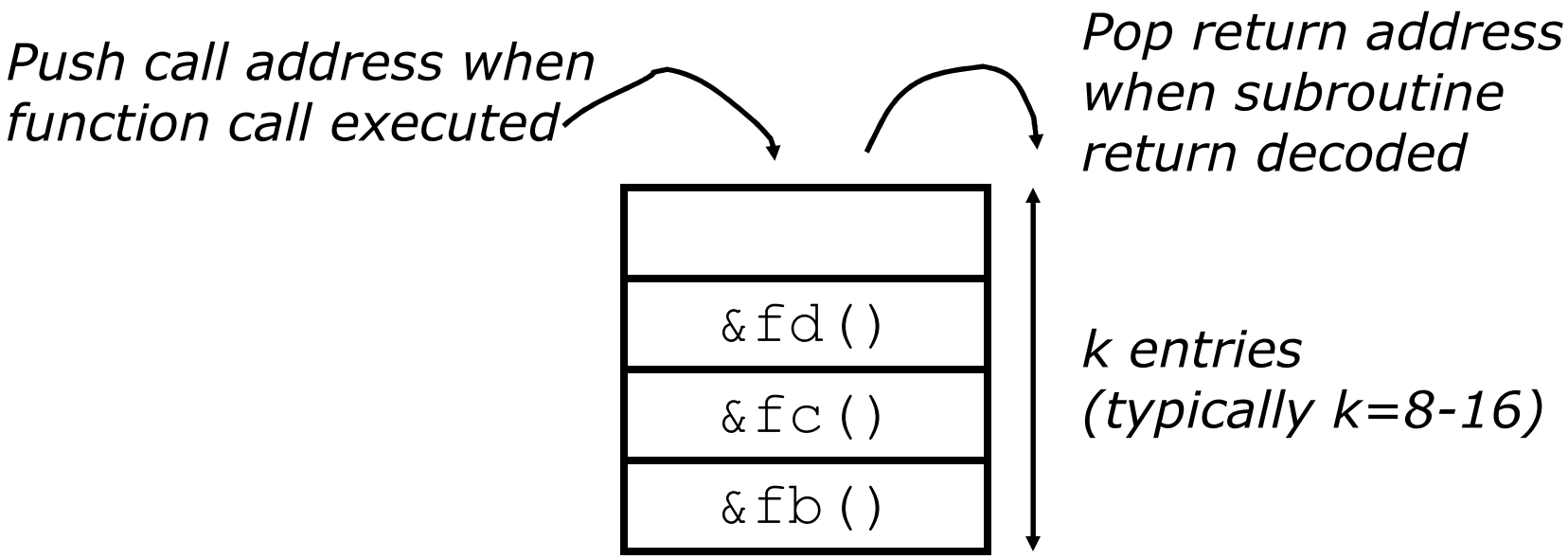

Line Prediction
(*Alpha 21[234]64*)

- For superscalar, useful to predict next cache line(s) to fetch

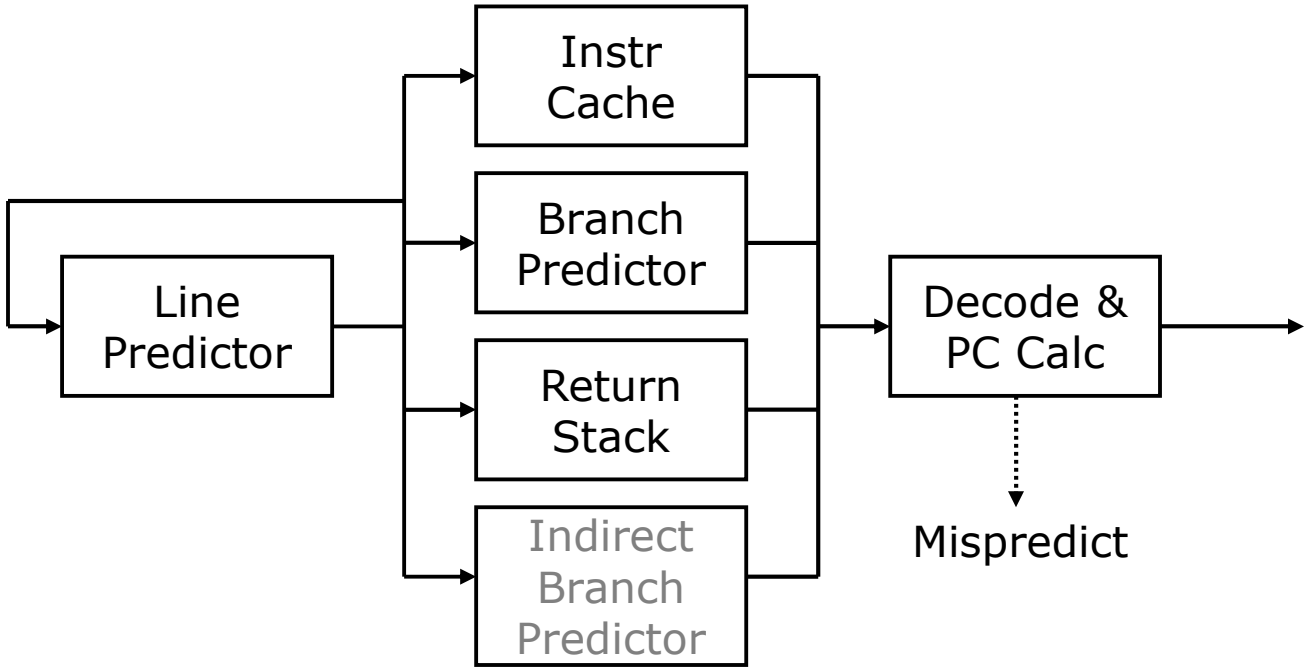

- Line Predictor predicts line to fetch each cycle (tight loop)
  - Untagged BTB structure – Why?
  - 21464 was to predict 2 lines per cycle
- Icache fetches block, and predictors improve target prediction
- PC Calc checks accuracy of line prediction(s)

Overview of Branch Prediction

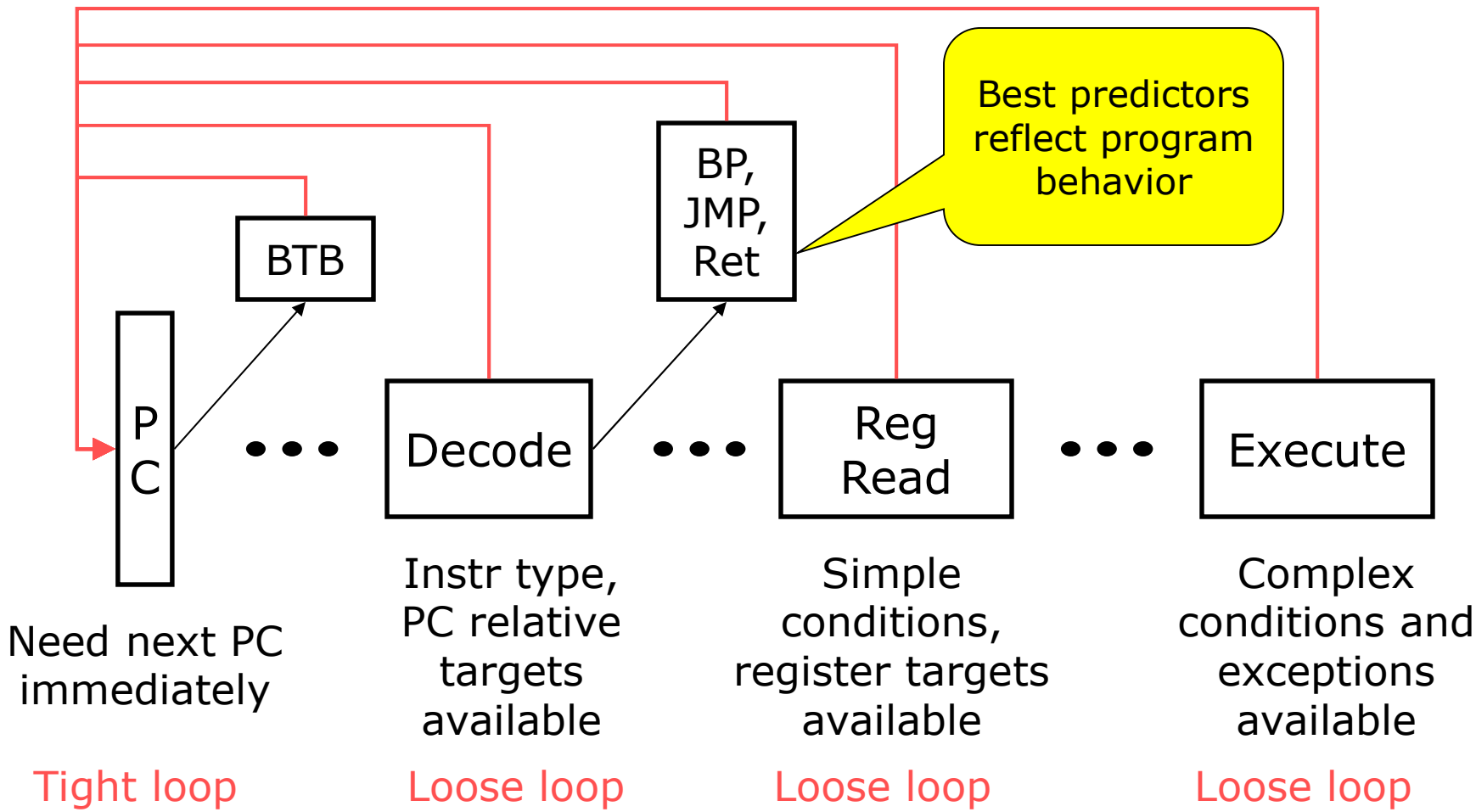

Must speculation check always be correct? No…

Next Lecture: Speculative Execution & Value Management