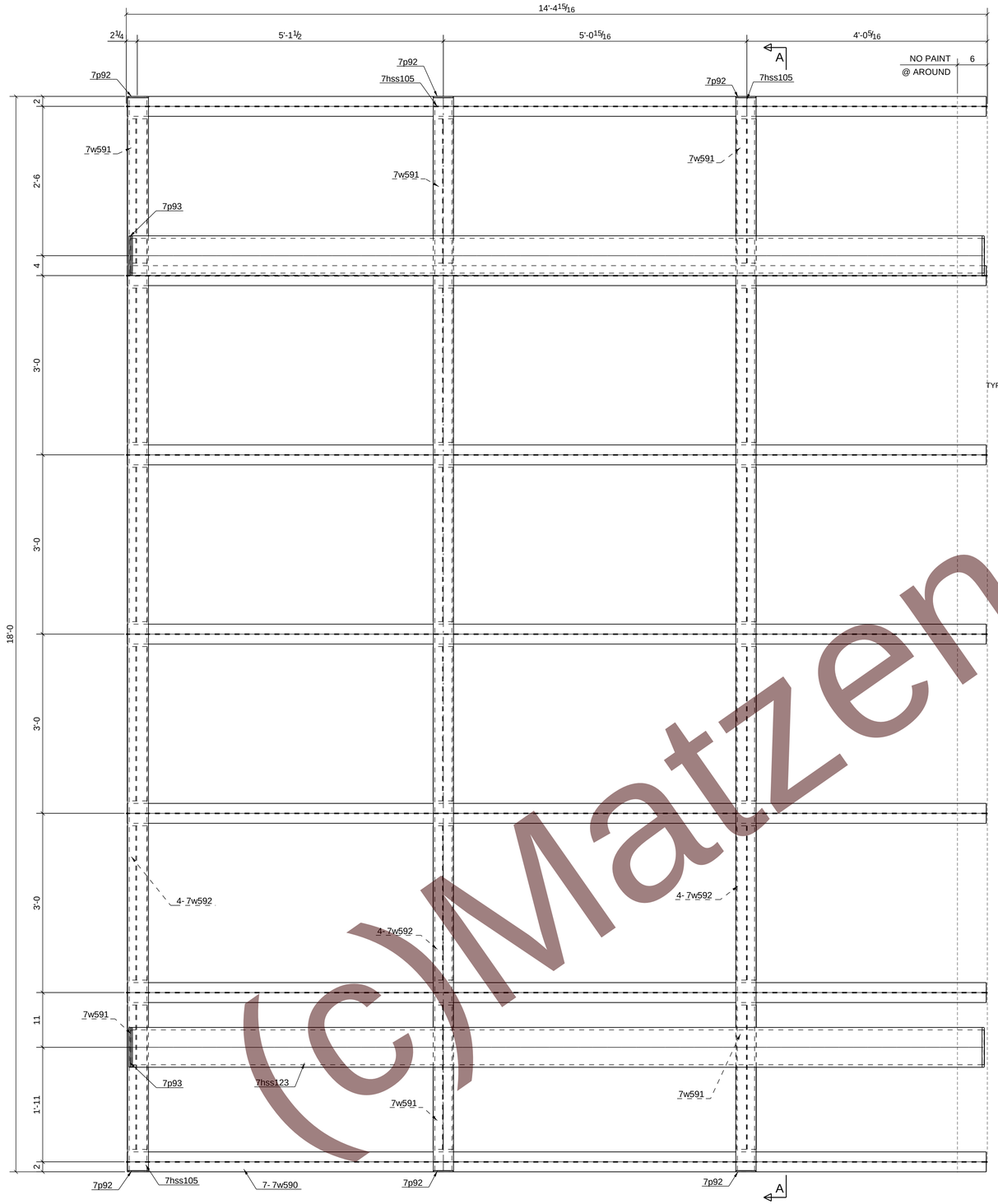

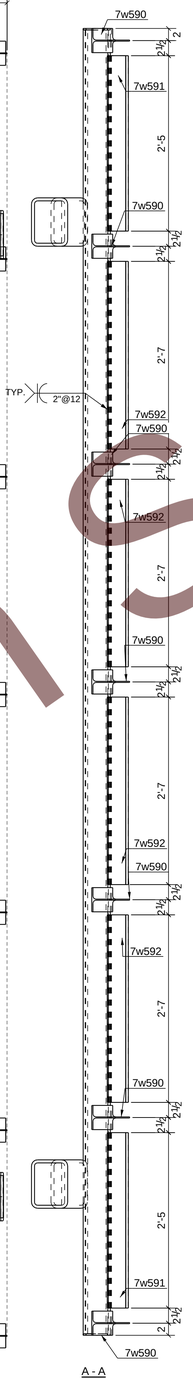

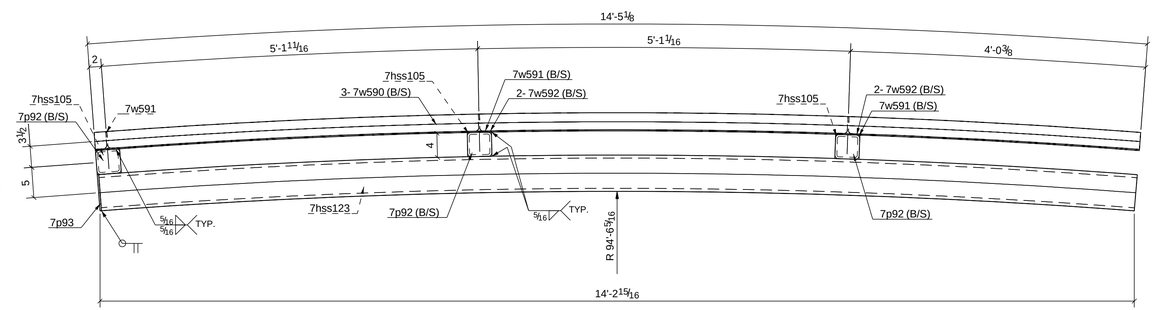

(c)Matzen Solutions