UNITED STATES DEPARTMENT OF COMMERCE
National Oceanic and Atmospheric Administration
NATIONAL MARINE FISHERIES SERVICE
Silver Spring, MD 20910

JUN 23 2011

Mr. Stewart Loeblich
waterwar@gmail.com

Dear Mr. Loeblich:

This letter is to acknowledge receipt of your Freedom of Information Act (FOIA) request. You requested any and all data of the necropsy report of Pilot Whale who expired June 18, 2011 at Marine Mammal Conservancy in the Florida Keys, the full report (i.e. including pictures), summaries and any and all data including medications and treatment administered that may be in our possession and/or custody.

Your request was received in our office on June 22, 2011. For tracking purposes, we have assigned your request **NOAA FOIA No. 2011-00514**.

If you have any questions regarding your request, please contact me at (301) 713-1364.

Sincerely,

Michael E. Justen
NMFS FOIA Liaison Officer

Printed on Recycled Paper

Subject: Fwd: Formal request for any and all data of the necropsy report of Pilot Whale who expired June 18,2011 at Marine Mammal Conservancy in the Fl Keys-PLEASE ASSIGN TO SEFSC
From: Beverly Smith <Beverly.Smith@noaa.gov>
Date: Wed, 22 Jun 2011 09:44:48 -0400
To: Mike Justen <Mike.Justen@noaa.gov>, NMFS FOIA1 <NMFS.FOIA1@noaa.gov>, FOIA Office <FOIA@noaa.gov>
CC: Becky Rootes <Becky.Rootes@noaa.gov>, Sophia Howard <Sophia.Howard@noaa.gov>

Mike,

Please find below a new FOIA request from Stewart Loelich. Please assign the request to SEFSC only, who has the original reports. Please do not assign the request to SER because the SER PRD has copies of reports received from SEFSC.

Thank you.
Beverly

-------- Original Message --------
Subject: Formal request for any and all data of the necropsy report of Pilot Whale who expired June 18,2011 at Marine Mammal Conservancy in the Fl Keys
Date: Tue, 21 Jun 2011 11:59:16 -0400
From: Stewart Loeblich <waterwar@gmail.com>
To: Roy.Crabtree@noaa.gov

ear sir,
I am requesting the full report:ie including pictures, summary's and any and all data including medications and treatment administered that may be in your possession and or custody. I am confidant of your imminent cooperation in doing so . Thank you in advance for complying to my formal request under the Freedom of Information act.in an expedient manner and with efficacy.
Respectfully,
StewartLoeblich

*The pilot whale from the Early May standing on Cudjoe Key Fl and any other 'fresh' pilot whales necropsies would be ideal also but.. do as you wish sir, that is your prerogative. Evidence of massive tissue damage may not be present but the weapon involved is not lo or mid frequency but hi and from a multiple beams that focus up to 5? mile away from the vessel and con explode mines ,sub,ships with rupture of bubles induces by hi energy beam is not normal occurrence and ? questionable if any direct or indirect exposure could do to a cetacean. No one knows consequences of such an exposure.But pelagic whales seem prone to some sort of recent (since 2007 or so therabouts)global stranding near USN activity.I am aware of gas bubble (narcosis type injury as one theory.because of rapid surfacing as one possibility but exposure to the new weapon may be far different than older experiences or encounter with lo or mid range sonar (used for detection and long range communication).This is a hi frequency mega watt focusng one or more sonar beams on a convergent spot and inducing rapid rupture of caviatation bubbles bursting in one single spot. The multi-megawatt nature would have energy requirements only a nuclear reactor to provide such. The presence of a nuke boat is and always be a question of the highest Security and its presence and or location anywhere underwater is Never Exposed to anyone; as a measure of National Security. The USN denial of such a presence is understandable but completely frustrating as to your inquiring of USN activity in vicinity of a mass strandings of cetaceans. ,

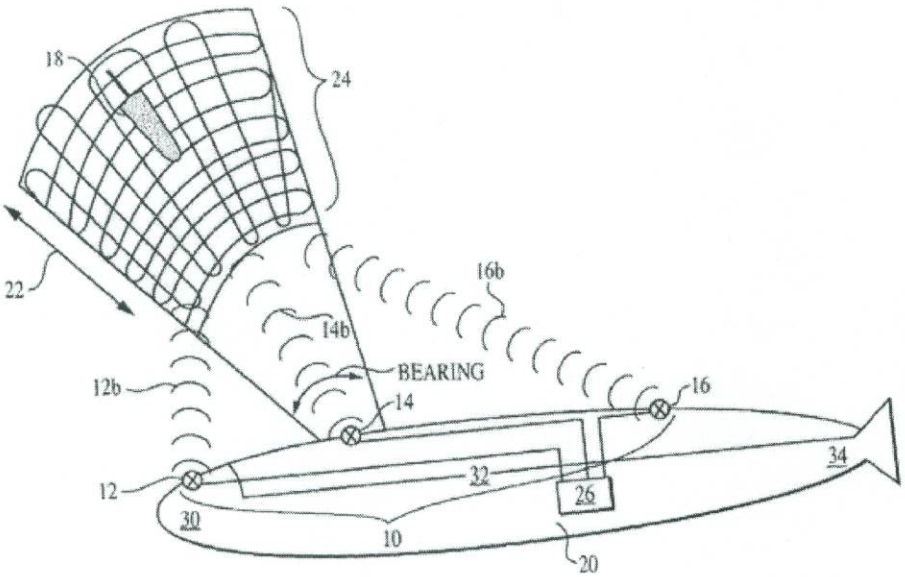

FIG. 1

Beverly Smith <beverly.smith@noaa.gov>
FOIA Coordinator
Southeast Regional Office
NOAA'S National Marine Fisheries Service

cavitation super weapon.jpg	**Content-Type:** image/jpeg **Content-Encoding:** base64

Navy Patents Sound Weapon copy.doc	**Content-Type:** application/msword **Content-Encoding:** base64

Subject: FW: Formal request for any and all data of the necropsy report of Pilot Whale who expired June 18,2011 at Marine Mammal Conservancy in the Fl Keys-PLEASE ASSIGN TO SEFSC
From: FOIA <FOIA@noaa.gov>
Date: Thu, 23 Jun 2011 10:00:59 -0400
To: 'NMFS FOIA1' <NMFS.FOIA1@noaa.gov>, 'Mike Justen' <Mike.Justen@noaa.gov>, 'Beverly Smith' <Beverly.Smith@noaa.gov>
CC: 'Becky Rootes' <Becky.Rootes@noaa.gov>, Marie.H.Marks@noaa.gov, Wendy.Schumacher@noaa.gov, 'Maryann Young' <Bhagnatee.M.Young@noaa.gov>, Monique.Love@noaa.gov

Good Morning Mike and Beverly,

The request has been assigned FOIA No. 2011-00514, with a due date of 07-21-2011.

Jean

From: Beverly Smith [mailto:Beverly.Smith@noaa.gov]
Sent: Wednesday, June 22, 2011 9:45 AM
To: Mike Justen; NMFS FOIA1; FOIA Office
Cc: Becky Rootes; Sophia Howard
Subject: Fwd: Formal request for any and all data of the necropsy report of Pilot Whale who expired June 18,2011 at Marine Mammal Conservancy in the Fl Keys-PLEASE ASSIGN TO SEFSC

Mike,

Please find below a new FOIA request from Stewart Loelich. Please assign the request to SEFSC only, who has the original reports. Please do not assign the request to SER because the SER PRD has copies of reports received from SEFSC.

Thank you.
Beverly

-------- Original Message --------
Subject: Formal request for any and all data of the necropsy report of Pilot Whale who expired June 18,2011 at Marine Mammal Conservancy in the Fl Keys
Date: Tue, 21 Jun 2011 11:59:16 -0400
From: Stewart Loeblich <waterwar@gmail.com>
To: Roy.Crabtree@noaa.gov

ear sir,
I am requesting the full report:ie including pictures, summary's and any and all data including medications and treatment administered that may be in your possession and or custody. I am confidant of your imminent cooperation in doing so . Thank you in advance for complying to my formal request under the Freedom of Information act.in an expedient manner and with efficacy.
Respectfully,
StewartLoeblich

*The pilot whale from the Early May standing on Cudjoe Key Fl and any other 'fresh' pilot whales necropsies would be ideal also but.. do as you wish sir, that is your prerogative. Evidence of massive tissue damage may not be present but the weapon involved is not lo or mid frequency but hi and from a multiple beams that focus up to 5? mile away from the vessel and con explode mines ,sub,ships with rupture of bubles induces by hi energy beam is not normal occurrence and ? questionable if any direct or indirect exposure could do to a cetacean. No one knows consequences of such an exposure.But pelagic whales seem

prone to some sort of recent (since 2007 or so therabouts)global stranding near USN activity.I am aware of gas bubble (narcosis type injury as one theory.because of rapid surfacing as one possibility but exposure to the new weapon may be far different than older experiences or encounter with lo or mid range sonar (used for detection and long range communication).This is a hi frequency mega watt focusng one or more sonar beams on a convergent spot and inducing rapid rupture of caviatation bubbles bursting in one single spot. The multi-megawatt nature would have energy requirements only a nuclear reactor to provide such. The presence of a nuke boat is and always be a question of the highest Security and its presence and or location anywhere underwater is Never Exposed to anyone; as a measure of National Security. The USN denial of such a presence is understandable but completely frustrating as to your inquiring of USN activity in vicinity of a mass strandings of cetaceans. ,

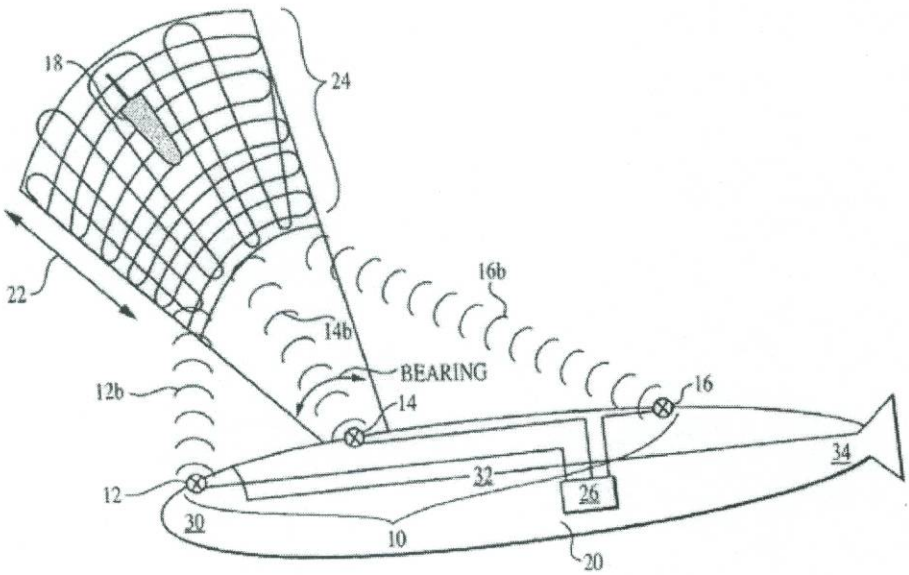

FIG. 1

U.S. Patent Apr. 17, 2007 Sheet 1 of 3 US 7,206,257 B1

Beverly Smith <beverly.smith@noaa.gov>
FOIA Coordinator
Southeast Regional Office
NOAA'S National Marine Fisheries Service

cavitation super weapon.jpg	**Content-Type:** image/jpeg **Content-Encoding:** base64

Navy Patents Sound Weapon copy.doc	**Content-Type:** application/msword **Content-Encoding:** base64