On the Integral Equation of Piecewise Linear Antennas

MASANOBU KOMINAMI AND KATSU ROKUSHIMA, MEMBER, IEEE

Abstract—**An efficient computation technique for obtaining the current distribution on a piecewise linear antenna is presented. The generalized Hallen's type integral equation with closed form kernel is formulated and then solved numerically by the collocation method. Numerical and experimental results for the gull shape and the trapezoidal tooth wire antennas are included.**

I. INTRODUCTION

THE EFFECT of a bend or a junction upon the current distribution on a thin wire antenna has been a well-studied problem for the past ten years. Many techniques have been developed and applied to increase the understanding of this problem [1]–[7]. The computer solution of integral equations is one such method. A difficulty that frequently arises in the method is the appearance of integro-differential operators in the kernel. Several works have concentrated on developing efficient techniques for this problem. For example, the authors have previously formulated the simplified Hallen's equations with closed form kernels by using Fourier transformation [4], [5] and more recently Egashira *et al.* have arrived at almost the same expression by applying the extended boundary condition [6]. Although these methods are very useful for the analysis of the junction problems, they have a disadvantage of introducing additional constraints.

The generalized Hallen's equation for a two-arm continuous wire antenna of arbitrary shape has been derived by Mei [8], which also contains integro-differential operators in the kernel. This may be treated as a special case of the above problem, if the continuously curved wires are approximated by segments of straight wires. However, this involves laborious calculation for the simultaneous integral equations and additional constraints, such as the Kirchhoff's current law or the continuity of scalar potential at the junction points, especially when the wire antenna is constructed of many straight segments such as log-periodic zigzag antenna. A much better way in this case is to formulate a single integral equation with a closed-form kernel by eliminating the boundary conditions.

It is shown in this paper that the current distribution on a piecewise linear antenna may be obtained from a relatively simple, yet exact, integral equation with a closed-form kernel. An important advantage of the method is that it is capable of producing accurate results without conventional double numerical integrations. Furthermore the method does not require the imposition of additional constraints. Both of these features are attractive from a viewpoint of numerical computation.

II. THEORY

Consider a balanced wire antenna of length $2L$, center fed by an idealized slice generator V_0. The structure may be planar or three dimensional. If the wire antenna is subdivided appropriately, it is considered as several straight segments connected together.

Fig. 1 illustrates the division of the wire antenna into $2N$ segments and defines the notation. The ith segment is identified by its starting point τ_i and its termination τ_{i+1}. Let a Cartesian coordinate system (x_i, y_i, z_i) be defined with the origin at the starting point and the x_i axis coinciding with the axis of ith segment. Let $\mathbf{a}_{xi}$ denote a unit vector directed along the axis of x_i.

The wire radius a_0 is assumed to be much smaller than both the segment length h_i and the wavelength λ, and the wire is made of perfect conductor. From basic electromagnetic theory, one may readily obtain the following differential equation for the vector potential:

$$\frac{\partial^2 A_{xi}(x_i)}{\partial x_i^2} + \beta^2 A_{xi}(x_i) = -\frac{\partial}{\partial x_i}\{\nabla_{ti} \cdot \mathbf{A}_{ti}(x_i)\}$$

$$(i = -N, -N+1, \cdots, -1, 1, \cdots, N) \tag{1}$$

where $A_{xi}(x_i)$ and $\mathbf{A}_{ti}(x_i)$ are the axial and transverse components of vector potential $\mathbf{A}_i(x_i)$, $\beta = 2\pi/\lambda$, and ∇_{ti} is a vector operator for the transverse components.

Equation (1) is a well-known inhomogeneous differential equation whose solution is

$$A_{xi}(x_i) = \frac{1}{jc_0}(B_i \cos \beta x_i + C_i \sin \beta x_i) - \int_0^{x_i} \nabla_{ti} \cdot \mathbf{A}_{ti}(\xi_i) \cos \beta(x_i - \xi_i)\, d\xi_i$$

$$(i = -N, -N+1, \cdots, -1, 1, \cdots, N) \tag{2}$$

where B_i, C_i are arbitrary constants of integration, and c_0 is the velocity of light vacuum. After differentiating $A_{xi}(x_i)$ of (2) with respect to x_i and rearranging terms in view of the Lorentz gauge, the scalar potential is given as

$$\Phi_{xi}(x_i) = -B_i \sin \beta x_i + C_i \cos \beta x_i + jc \int_0^{x_i} \nabla_{ti} \cdot \mathbf{A}_{ti}(\xi_i) \sin \beta(x_i - \xi_i)\, d\xi_i$$

$$(i = -N, -N+1, \cdots, -1, 1, \cdots, N). \tag{3}$$

The constants of integration, B_i, C_i $(i = -N, -N+1, \cdots, -1, 1, \cdots, N)$, must assume values which render the resulting integral equation in compliance with the following conditions:

$$\mathbf{A}_i(h_i) = \mathbf{A}_{i+1}(0) \qquad (i = 1, 2, \cdots N-1) \tag{3a}$$

$$\Phi_i(h_i) = \Phi_{i+1}(0) \qquad (i = 1, 2, \cdots N-1) \tag{3b}$$

Manuscript received May 12, 1980; revised November 5, 1980.
The authors are with the Department of Electrical Engineering, University of Osaka Prefecture, Sakai, Osada, Japan.

0018-926X/81/0900-0787$00.75 © 1981 IEEE

Authorized licensed use limited to: Texas A M University. Downloaded on September 11,2020 at 21:51:15 UTC from IEEE Xplore. Restrictions apply.

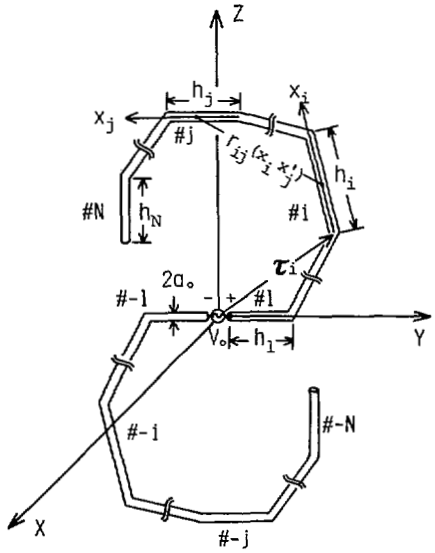

Fig. 1. Parameters and coordinate system for piecewise linear antenna.

$$\mathbf{A}_i(h_i) = \mathbf{A}_{i-1}(0) \qquad (i = -N, -N+1, \cdots, -1) \tag{3c}$$

$$\Phi_i(h_i) = \Phi_{i-1}(0) \qquad (i = -N, -N+1, \cdots, -1) \tag{3d}$$

$$\mathbf{A}_1(0) = \mathbf{A}_{-1}(0) \tag{3e}$$

$$\Phi_1(0) = -\Phi_{-1}(0) = \frac{V_0}{2}. \tag{3f}$$

In the following only the quantities defined in a half region $1 \leqslant i \leqslant N$ will be considered explicitly, since the problem of interest is the balanced wire structure. Inserting (2) and (3) into the boundary conditions (3a) and (3b) yields equations for the constants of integration. We obtain

$$B_{i+1} = B_i \cos \beta h_i + C_i \sin \beta h_i - P_i(h_i) \tag{4}$$

$$C_{i+1} = -B_i \sin \beta h_i + C_i \cos \beta h_i + Q_i(h_i) \tag{5}$$

where

$$P_i(h_i) = jc_0 \int_0^{h_i} \nabla_{ti} \cdot \mathbf{A}_{ti}(\xi_i) \cos \beta(h_i - \xi_i)\, d\xi_i - \mathbf{A}_i(h_i) \cdot (\mathbf{a}_{x_{i+1}} - \mathbf{a}_{x_i}) \tag{6}$$

$$Q_i(h_i) = jc_0 \int_0^{h_i} \nabla_{ti} \cdot \mathbf{A}_{ti}(\xi_i) \sin \beta(h_i - \xi_i)\, d\xi_i. \tag{7}$$

Using the recurrence relations (4) and (5) we observe that the constants of integration B_i and C_i can be written in terms of B_1 and C_1 as

$$B_i = B_1 \cos \beta l_i + C_i \sin \beta l_i - \sum_{\substack{k=1 \\ (\neq 0)}}^{i-1} P_k(h_k) \cos \beta(l_i - l_{k+1}) + \sum_{\substack{k=1 \\ (\neq 0)}}^{i-1} Q_k(h_k) \sin \beta(l_i - l_{k+1}) \tag{8}$$

$$C_i = -B_i \sin \beta l_i + C_i \cos \beta l_i + \sum_{\substack{k=1 \\ (\neq 0)}}^{i-1} P_k(h_k) \sin \beta(l_i - l_{k+1}) + \sum_{\substack{k=1 \\ (\neq 0)}}^{i-1} Q_k(h_k) \cos \beta(l_i - l_{k+1}) \tag{9}$$

where l_i is the wire length measured from the feed point to the starting point of ith segment

$$l_i = \sum_{\substack{n=1 \\ (\neq 0)}}^{i-1} h_n. \tag{10}$$

Substituting (8) and (9) in (2), the axial component of vector potential may be written as

$$\begin{aligned} A_{xi}(x_i) &= \frac{1}{jc_0} \{B_i \cos \beta(l_i + x_i) + C_i \sin \beta(l_i + x_i)\} \\ &\quad - \int_0^{x_i} \nabla_{ti} \cdot \mathbf{A}_{ti}(\xi_i) \cos \beta(x_i - \xi_i)\, d\xi_i \\ &\quad - \sum_{\substack{k=1 \\ (\neq 0)}}^{i-1} \{P_k(h_k) \cos \beta(l_i + x_i - l_{k+1}) \\ &\quad - Q_k(h_k) \sin \beta(l_i + x_i - l_{k+1})\} (i = 1, 2, \cdots, N). \end{aligned} \tag{11}$$

Similarly, the vector potentials in the other half region $-N \leqslant i \leqslant -1$ are found as

$$\begin{aligned} A_{xi}(x_i) &= \frac{1}{jc_0} \{B_{-1} \cos \beta(l_i + x_i) + C_{-1} \sin \beta(l_i + x_i)\} \\ &\quad - \int_0^{x_i} \nabla_{ti} \cdot \mathbf{A}_{ti}(\xi_i) \cos \beta(x_i - \xi_i)\, d\xi_i \\ &\quad - \sum_{\substack{k=i+1 \\ (\neq 0)}}^{-1} \{P_k(h_k) \cos \beta(l_i + x_i - l_{k+1}) \\ &\quad - Q_k(h_k) \sin \beta(l_i + x_i - l_{k+1})\} \\ &\quad (i = -N, -N+1, \cdots, -1). \end{aligned} \tag{12}$$

The constants B_1, C_1, B_{-1}, and C_{-1} are determined by satisfying the driving-point boundary condition (3e) and (3f). Thus

$$B_1 = B_{-1} = B$$

$$C_1 = -C_{-1} = \frac{V_0}{2}. \tag{13}$$

Authorized licensed use limited to: Texas A M University. Downloaded on September 11,2020 at 21:51:15 UTC from IEEE Xplore. Restrictions apply.

The several components of the vector potential appearing in (11) and (12) may be expressed as a Helmholtz integral:

$$\mathbf{A}_i(x_i) = \frac{\mu}{4\pi} \sum_{\substack{j=-N \\ (\neq 0)}}^{N} \int_0^{h_i} I(l_j + x_j')\mathbf{a}_{xj}\Psi_{ij}(x_i, x_j')\, dx_j'$$

$$(i = -N, -N+1, \cdots, -1, 1, \cdots, N) \quad (14)$$

where

$$\Psi_{ij}(x_i, x_j') = \frac{e^{-j\beta r_{ij}(x_i, x_j')}}{r_{ij}(x_i, x_j')} \quad (15)$$

and

$$r_{ij}(x_i, x_j') = [(x_i + \rho_{ij} \cdot \mathbf{a}_{xi})^2 + \rho_{ij} \cdot \rho_{ij} - (\rho_{ij} \cdot \mathbf{a}_{xi})^2 + a_0^2]^{1/2} \quad (16)$$

with

$$\rho_{ij}(x_j') = -x_j'\mathbf{a}_{xi} - \tau_j + \tau_i. \quad (17)$$

When the Helmholtz integral expression for the vector potential (14) and the driving-point boundary condition (13) are substituted into (11), one may obtain the coupled integral equations

$$B \cos \beta(l_i + x_i) + \epsilon_i \frac{V_0}{2} \sin \beta(l_i + x_i) = \sum_{\substack{j=-N \\ (\neq 0)}}^{N} \int_0^{h_j} I(l_j + x_j')K_{ij}(x_i, x_j')\, dx_j'$$

$$(i = -N, -N+1, \cdots, -1, 1, \cdots, N) \quad (18)$$

where the kernel $K_{ij}(x_i, x_j')$ is defined as

$$K_{ij}(x_i, x_j') = j30\Bigg[\mathbf{a}_{xi} \cdot \mathbf{a}_{xj}\Psi_{ij}(x_i, x_j') + g_{ij}(x_i, x_j') + \sum_{\substack{k=\epsilon_i \\ (\neq 0)}}^{i-\epsilon_i} \cos \beta(l_i + x_i - l_{k+1})\{(\mathbf{a}_{x_k} - \mathbf{a}_{x_{k+1}}) \cdot \mathbf{a}_{x_j}\Psi_{kj}(h_k, x_j') + g_{kj}(h_k, x_j')\} - \sum_{\substack{k=\epsilon_i \\ (\neq 0)}}^{i-\epsilon_i} \sin \beta(l_i + x_i - l_{k+1})f_{kj}(h_k, x_j')\Bigg] \quad (19)$$

$$g_{ij}(x_i, x_j') = \int_0^{x_i} \nabla_{ti} \cdot \mathbf{a}_{xj}\Psi_{ij}(\xi_i, x_j') \cos \beta(x_i - \xi_i)\, d\xi_i \quad (20)$$

$$f_{ij}(x_i, x_j') = \int_0^{x_i} \nabla_{ti} \cdot \mathbf{a}_{x_i}\Psi_{ij}(\xi_i, x_j') \sin \beta(x_i - \xi_i)\, d\xi_i \quad (21)$$

$$\epsilon_i = \begin{cases} 1, & i \geqq 1 \\ -1, & i \leqq -1. \end{cases} \quad (22)$$

By using transformations similar to those given in earlier paper [4], [5] for the treatment of integro-differential operators, (20) and (21) may be transformed into closed forms as follows

$$g_{ij}(x_i, x_j') = -\frac{\mathbf{a}_{xj} \cdot \rho_{ij} - (\mathbf{a}_{xj} \cdot \mathbf{a}_{xi})(\rho_{ij} \cdot \mathbf{a}_{xi})}{\rho_{ij} \cdot \rho_{ij} - (\rho_{ij} \cdot \mathbf{a}_{xi})^2 + a_0^2} \cdot \{(x_i + \rho_{ij} \cdot \mathbf{a}_{xi})\Psi_{ij}(x_i, x_j') - (\rho_{ij} \cdot \mathbf{a}_{xi}) \cdot \cos \beta x_i \Psi_{ij}(0, x_j') + j \sin \beta x_i e^{-j\beta r_{ij}(0, x_j')}\} \quad (23)$$

$$f_{ij}(x_i, x_j') = -\frac{\mathbf{a}_{xj} \cdot \rho_{ij} - (\mathbf{a}_{xj} \cdot \mathbf{a}_{xi})(\rho_{ij} \cdot \mathbf{a}_{xi})}{\rho_{ij} \cdot \rho_{ij} - (\rho_{ij} \cdot \mathbf{a}_{xi})^2 + a_0^2} \cdot \{je^{-j\beta r_{ij}(x_i, x_j')} - (\rho_{ij} \cdot \mathbf{a}_{xi}) \sin \beta x_i \Psi_{ij}(0, x_j') - j \cos \beta x_i e^{-j\beta r_{ij}(0, x_j')}\}. \quad (24)$$

In order to find a single expression for the coupled integral equation (18), we define the length measured from the feed point such that

$$s = l_i + x_i, \qquad -s = l_{-i} + x_{-i}$$
$$s' = l_j + x_j', \qquad -s' = l_{-i} + x_{-j}'. \quad (25)$$

Thus

$$B \cos \beta s + \frac{V_0}{2} \sin \beta |s| = \int_{-L}^{L} I(s')K(s, s')\, ds' \quad (26)$$

where the kernel $K(s, s')$ is given by (19) for s in the ith and s' in the jth segment, respectively.

The integral equation derived in the foregoing analysis may be solved numerically by using the collocation (point matching) method. It has been shown that the entire domain expansion for the current distribution in the collocation method provides a rapidly convergent solution [9]. According to this technique the current is

$$I(s') = \sum_{m=1}^{M} I_m \sin \left\{(2m-1)\frac{\pi(L - s')}{2L}\right\} \quad (27)$$

where the I_m ($m = 1, 2, \cdots, M$) are complex expansion coefficients. Substituting (27) in (26) and matching (26) at M equally spaced points, we obtain a linear set of equations for the unknown expansion coefficients I_m. This set of equations may be solved by matrix inversion and multiplication.

Authorized licensed use limited to: Texas A M University. Downloaded on September 11,2020 at 21:51:15 UTC from IEEE Xplore. Restrictions apply.

Upon finding the solution to (26), we can find the far field

$$\mathbf{E}(R,\theta,\phi) = -j30\beta \frac{e^{-j\beta R}}{R} \int_{-L}^{L} I(s')\mathbf{F}(\theta,\phi,s')\,ds' \tag{28}$$

$$\mathbf{F}(\theta,\phi,s') = \mathbf{a}_{xj} e^{j\beta(x_j'\mathbf{a}_{xj}+\tau_j)\cdot\mathbf{a}_r} \tag{29}$$

where $s' = 1_j + x_j'$ and $\mathbf{a}_r$ is the radius vector to the distant field point.

III. NUMERICAL AND EXPERIMENTAL RESULTS

To illustrate the use of the presented formulation we treat the gull shape antenna and the trapezoidal tooth antenna. These antennas are constructed of straight wire segments.

The geometry of the gull shape antenna is shown in Fig. 2. The antenna was made of length $L = 75$ mm and radius $a_0 = 0.5$ mm. These dimensions correspond to an electrical length $L/\lambda = 0.75$ and radius $a_0/\lambda = 0.005$ at frequency $f_0 = 3$ GHz. An example of the real (G) and imaginary (B) parts of the gull shape antenna admittance against frequency f is shown in Fig. 3. The theoretical admittance was calculated with a five-term trigonometric Fourier series, and the measurement was performed by a conventional standing-wave method. The theoretical solutions were also compared in the radiation pattern with experimental data taken at the center frequency $f_0 = 3$ GHz. These plots are shown in Fig. 4. Excellent agreement of theoretical and experimental results is obtained.

Next, the trapezoidal tooth antenna [10], as shown in Fig. 5, is considered. This is a typical log-periodic antenna. The structure is characterized by the angles α and ψ and the expansion factor τ. Using these parameters, the segment lengths are given for the even N by

$$h_i = \begin{cases} D\sqrt{\tau}^{\frac{N}{2}-1} \sin\frac{\psi}{2}, & i = 1 \\ D\sqrt{\tau}^{\frac{N}{2}-1} \tan\frac{\alpha}{2}, & i = 2 \\ D(1-\sqrt{\tau})\sqrt{\tau}^{\frac{N-1-i}{2}} \sec\frac{\alpha}{2}, & i = 3, 5, \cdots, N-1 \\ D\sqrt{\tau}^{\frac{N-1}{2}}\, 2\tan\frac{\alpha}{2}, & i = 4, 6, \cdots, N \end{cases} \tag{30}$$

where D is the boom length given by

$$D = \frac{1}{\sqrt{\tau}^{N/2-1}\left(\sin\frac{\psi}{2} + \tan\frac{\alpha}{2}\right) + \left(\frac{1-\sqrt{\tau}}{\cos\frac{\alpha}{2}} + 2\tan\frac{\alpha}{2}\right)\left(\frac{1-\sqrt{\tau}^{N/2}}{1-\sqrt{\tau}}\right)} \tag{31}$$

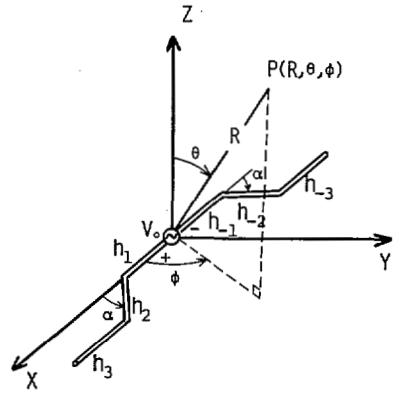

Fig. 2. Geometry of gull shape antenna.

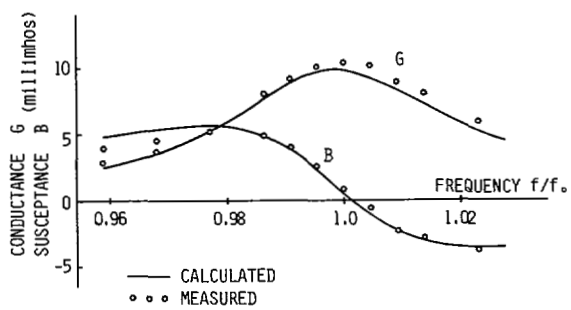

Fig. 3. Real and imaginary parts of input admittance of gull shape antenna as function of relative frequency f/f_0 ($h_1 = 7.14$ mm, $h_2 = 42.86$ mm, $h_3 = 25$ mm, $a_0 = 0.5$ mm, $\alpha = 50°$, $f_0 = 3$ GHz).

The radiation pattern of the trapezoidal tooth antenna was measured and calculated at $f_0 = 3$ GHz with $L = 5\ \lambda$, $a_0 = 0.005\ \lambda$, $N = 18$, $\tau = 0.7$, $\alpha = 28°$, and $\psi = 32°$. The results, presented in Fig. 6, show fairly good agreement with the measured data. The curves were calculated using 21 terms trigonometric Fourier series.

In Figs. 3, 4, and 6, there are some differences between the predicted and the observed results. This is to be expected because of the difficulty of measurement and the existence of nonaxial currents near the sharp bend. In the idealized model, only axial currents are assumed to exist.

IV. CONCLUSION

A formally exact integral equation has been presented for the piecewise linear antenna of arbitrary shape. The integral equation has a closed-form kernel and requires no special boundary condition on the current. The theoretical and experimental results agree remarkably well, which confirms

Authorized licensed use limited to: Texas A M University. Downloaded on September 11,2020 at 21:51:15 UTC from IEEE Xplore. Restrictions apply.

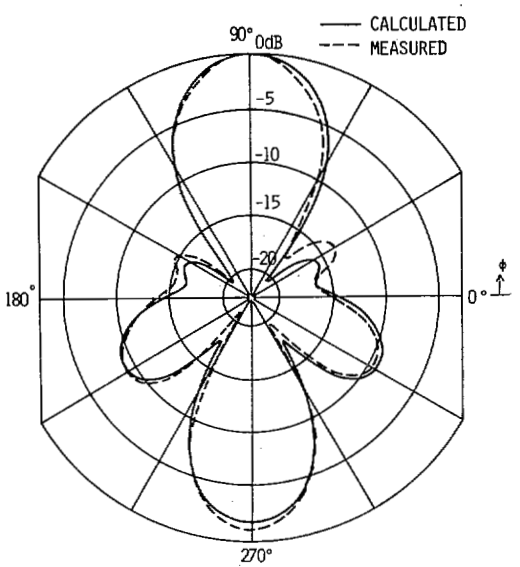

Fig. 4. Radiation pattern of gull shape antenna in XY plane (h_1 = 0.0714 λ, h_2 = 0.4286 λ, h_3 = 0.25 λ, a_0 = 0.005 λ, $\alpha = 50°$, f_0 = 3 GHz).

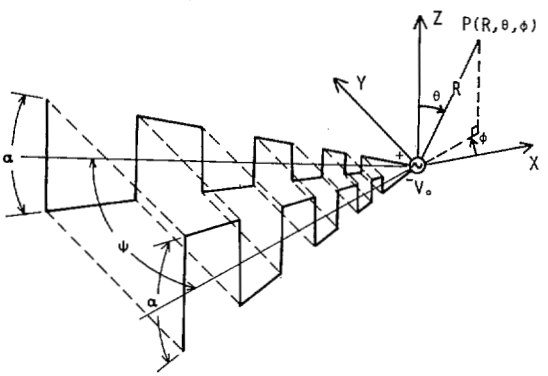

Fig. 5. Geometry of trapezoidal tooth antenna.

the accuracy of the calculations. It is of interest to note that it takes only 21 terms in the entire-domain trial functions to analyze a 5 λ log-periodic antenna. The computer program resulting from this investigation is certain to result in great saving of labor in design of piecewise linear antennas.

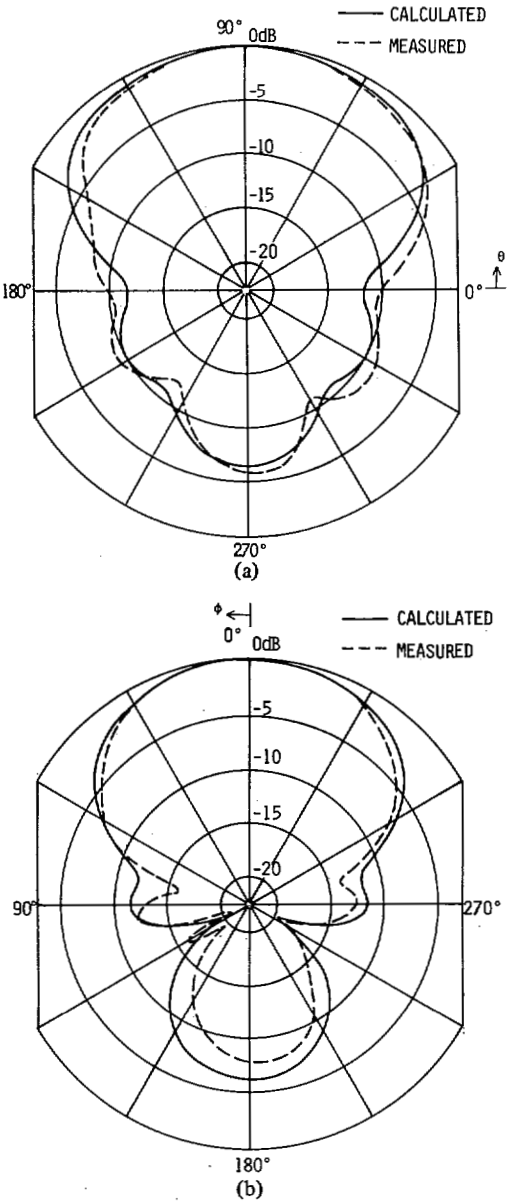

Fig. 6. Radiation patterns of trapezoidal tooth antenna (L = 5 λ, a_0 = 0.005 λ, N = 18, τ = 0.7, $\alpha = 28°$, $\psi = 32°$, f_0 = 3 GHz). (a) XZ plane. (b) XY plane.

ACKNOWLEDGMENT

The authors wish to thank Mr. Shizuo Mori for his many useful discussions and Mr. Nobuo Imanishi for his help in obtaining the experimental results of this investigation.

REFERENCES

[1] T. L. Simpson, "The theory of top-loaded antennas: Integral equations for the currents," *IEEE Trans. Antennas Propagat.*, vol. AP-19, no. 2, pp. 186–190, Mar. 1971.

[2] C. M. Butler, "Currents induced on a pair of skew crossed wires," *IEEE Trans. Antennas Propagat.*, vol. AP-20, no. 6, pp. 731–736, Nov. 1972.

[3] P. Silvester and K. K. Chan, "Analysis of antenna structures assembled from arbitrarily located straight wires," *Proc. Inst. Elec. Eng.*, vol. 120, no. 1, pp. 21–26, Jan. 1973.

[4] M. Kominami and K. Rokushima, "A simplified integral equation for thin wire antennas or scatterers," *Trans. IECE Japan*, vol. 59-B, no. 5, pp. 267–273, May 1976.

[5] M. Kominami, S. Yamamura, and K. Rokushima, "A simplified integral equation of three dimensional wire structure—Application to top-loaded antennas," *Trans. IECE Japan*, vol. 60-B, no. 3, pp. 205–211, Mar. 1977.

[6] S. Egashira and M. Taguchi, "On the analysis of the umbrella antennas using the Hallen-type integral equation," *IEEE Trans. Antennas Propagat.*, vol. AP-28, no. 3, pp. 393–397, May 1980.

[7] R. Mittra and W. L. Ko, "A finite difference approach to the wire junction problem," *IEEE Trans. Antennas Propagat.*, vol. AP-23, no. 3, pp. 435–438, May 1975.

[8] K. K. Mei, "On the integral equations of thin wire antenna," *IEEE Trans. Antennas Propagat.*, vol. AP-13, no. 3, pp. 374–378, May 1965.

[9] K. A. Al-Badmihy and J. L. Yee, "Hemispherically capped thick cylindrical monopole with a conical feed section," *IEEE Trans. Antennas Propagat.*, vol. AP-22, no. 3, pp. 477–481, May 1974.

[10] V. H. Rumsey, *Frequency Independent Antennas*. New York: Academic, pp. 63–70, 1966.

Authorized licensed use limited to: Texas A M University. Downloaded on September 11,2020 at 21:51:15 UTC from IEEE Xplore. Restrictions apply.

Masanobu Kominami was born in Wakayama, Japan, on April 14, 1946. He received the B.S., M.S., and Ph.D. degrees in electrical engineering from the University of Osaka Prefecture, Sakai, Japan, in 1969, 1971, and 1976, respectively.

Since 1971 he has been a Research Associate in the Department of Electrical Engineering at University of Osaka Prefecture. His research interests are in the areas of electromagnetic theory and numerical methods applied to antennas and microwave circuits.

Dr. Kominami is a member of the IECE of Japan.

Katsu Rokushima (M'64) was born in Osaka, Japan, on October 10, 1926. He received the B.S. and Ph.D. degrees in electrical engineering both from Osaka University, Osaka, in 1950 and 1971, respectively.

He joined University of Osaka Prefecture, Sakai, Japan, in 1950, where he engaged in research in microwave engineering. Since 1973, he has been a Professor of Electrical Engineering at University of Osaka Prefecture. His main areas of interest are electromagnetic field problem including microwave circuits, antennas and optical waveguides.

Dr. Rokushima is a member of the IECE of Japan, the IEE of Japan, and the Optical Society of America.

Communications

GTD Analysis of the Radiation Patterns of a Shaped Subreflector

M. S. NARASIMHAN, SENIOR MEMBER, IEEE, P. RAMANUJAM, STUDENT MEMBER, IEEE, AND K. RAGHAVAN, STUDENT MEMBER, IEEE

Abstract—**A technique of analyzing the principal plane radiation patterns of a subreflector shaped using the method enunciated by Collins [1] has been presented. The analysis is based on the uniform geometrical theory of diffraction (UGTD) [2], and a simplified procedure has been adopted in the determination of the principal plane radii of curvature of the subreflector. The numerical results obtained based on UGTD correlate well with those obtained using the method of physical optics (PO).**

I. INTRODUCTION

In a high efficiency dual reflector antenna system, the shaping is carried out either for the subreflector alone [1] or for both the subreflector and the associated main reflector [3]–[5]. In this communication, a systematic analysis of the radiation patterns of a subreflector shaped as given in [1] and fed by a spherical source feed is presented. Although an analysis for any arbitrary subreflector is available [6], the simplified procedure presented here is sufficient to analyze an axially symmetric shaped subreflector[1]. The simplicity lies in the determination of the principal radii of curvature of the subreflector surface using the Gaussian quadrature method. The computed results based on the geometrical theory of diffraction (GTD) for a typical subreflector have been found to correlate exceedingly well with the conventional physical optics (PO) results justifying the accuracy of the analysis presented.

Manuscript received September 16, 1980; revised December 18, 1980.

The authors are with the Electromagnetics and Antennas Group, Centre for Systems and Devices, Indian Institute of Technology, Madras 600 036, India.

[1] Further, the analysis presented in [6], [11] does not consider explicitly shaped subreflectors with concave and convex shapes on either side of the point of inflection; it also does not consider axial caustics. Moreover, the analysis presented here makes use of the more accurate uniform geometrical theory of diffraction (UGTD) formulation [10].

II. SUBREFLECTOR SHAPING

The coordinate system of the shaped subreflector is given in Fig. 1. The curve of revolution of the shaped subreflector obtained following the procedure presented in [1] is given by

$$\rho = \rho_m \exp\left(\int_{\beta_m}^{\beta} \tan\left(\frac{\beta+\theta}{2}\right) d\beta\right) \tag{1}$$

where θ and β are related by

$$\theta = \cos^{-1}\left[1 - \frac{(1-\cos\theta_m)(1-\cos^{(n+1)}\beta)}{(1-\cos^{(n+1)}\beta_m)}\right] \tag{2}$$

and $\rho_m = (D/2)\operatorname{cosec}\beta_m$ (Fig. 2).

In the above, the feed power pattern has been assumed to be of the form $F(\beta) = \cos^n \beta$, and n is calculated from the required taper at the subreflector edge. Here θ_m corresponds to the extreme reflected ray (Fig. 1).

While evaluating the integral in the exponential of (1) numerically, the Gaussian quadrature has been utilized to give closed form expressions for the radii of curvature of the subreflector surface. If N represents the number of points used in the Gaussian quadrature, then

$$\rho = \rho_m \exp\left(\sum_{i=1}^{N} W_i G\right)$$

$$= \rho_m \exp\left(\sum_{i=1}^{N} W_i \left(\frac{\beta-\beta_m}{2}\right) \tan\left(\frac{\alpha}{2}+\frac{\gamma}{2}\right)\right) \tag{3}$$

0018-926X/81/0900-0792$00.75 © 1981 IEEE

Authorized licensed use limited to: Texas A M University. Downloaded on September 11,2020 at 21:51:15 UTC from IEEE Xplore. Restrictions apply.