StoneAge® *WARTHOG*® Rotary Sewer Nozzle (WG-1)

Description:

The **Warthog 1ò** Rotary Sewer Nozzle was designed for waterjet cleaning of pipes and sewer lines. Jet thrust powers rotation of the head and pulls the tool thru the line. The Warthog WG-1 has a 1òNPT threaded inlet nut. The inlet is also available in BSP threads. The WG-1 is capable of working pressures up to 5000 psi (350 bar) and flow rates of 50 to 80 gpm. The unit is filled with a thick viscous fluid that controls the rotation speed. The nozzle orifice sizes should match the operating conditions of pressure and flow desired. Hose length and size must be known to correctly determine the proper orifice sizes. Contact your distributor or **www.sewernozzles.com** to help in nozzle selection.

The most important item in maintaining the Warthog is keeping the tool full of viscous fluid. The tool also has a high pressure seal and seat that will need to be replaced if the tool begins to leak water from under the Weep Seal. The tool may leak water at low pressure intermittently, but if it leaks at operating pressure, it is time to change the seal.

Operation:

A 15-25 foot long section of leader hose of a different color than the jetter hose is recommended to indicate how close the tool is to exiting the pipe during cleaning. Flush the jetter hose to remove debris. Pass hose end through the hose guard or Tiger Tail. If the **Warthog WG-1** is being used in pipe diameters less than 10 inches it can be attached directly to the hose end; if being used in larger pipes it needs to have a straight rigid pipe or centralizer placed behind the tool so that the rigid length is greater than the pipe diameter so the tool cannot turn around in the pipe.

Risk of serious injury or death: Do not attempt to clean the manhole with the Warthog hanging on the hose. The tool can turn around and hit the operator.

Position the Warthog and tiger tail so it is within the pipe to be cleaned. Recommended cleaning direction is upstream from the manhole. Slowly bring the pump up to pressure, making certain that the Warthog begins to pull it's way in the proper direction up the pipe; allow it to advance a few feet and note the location of the leader hose or other hose marker being used. Once the pump is up to operating pressure, feed out the reel at a reasonable rate to allow the jets time to clean the pipe. If roots are present, feeding at a slower rate will improve the cleaning results. Depending on the amount of debris present in the pipe, it may be necessary to occasionally pull the Warthog back toward the manhole to prevent large buildups of debris behind the tool.

When finished cleaning, withdraw tool back to initial starting point noted by the location of the leader or hose marker. Shut down and secure pump before removing Warthog from line. Secure the hose reel and Warthog to keep it from dragging on the ground. If the Warthog will be removed from the line and stored for more than several days, blow out water with compressed air to prolong the life of the internal components.

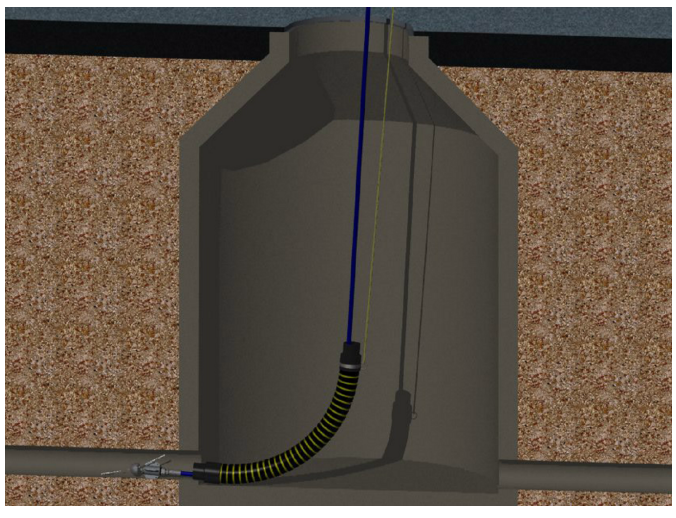

Troubleshooting:

Head will not rotate: First try rotating head by hand and see if it feels rough or gritty to turn. If it does, the tool must be disassembled and repaired; it likely has bad bearings, seals and fluid. If the tool feels okay, check to see if any nozzles are plugged; even if a nozzle is only partially blocked it can keep the head from rotating. Nozzles must be removed from the head to properly clean them; it does not do any good to poke the material plugging the nozzle back into the head, as it will just replug a nozzle.

Head spins too fast: It is likely that the swivel is low on viscous fluid, or the viscous fluid has water in it. The best thing to do is drain all the fluid, wipe the parts clean and refill with the proper fluid. Check that the shaft seals are still good and will keep the fluid from leaking out.

Seal Leak: The seal may leak initially at low pressure, but should pop closed as pressure is increased. If operating pressure is reached and the seal is leaking continuously, the high pressure seal may need to be replaced. Refer to the maintenance below.

Seals wear out quickly: The tool must be disassembled and inspected. The brass seat should be checked for being installed in the right direction, and it should be replaced any time the high pressure seal is replaced. The bore of the shaft where the high pressure seal is located should be checked for grooving. If it is worn larger than .633", the shaft will need to be replaced.

Maintenance:

To service the viscous fluid and high pressure seal:

1. Unscrew the Inlet Nut (WG 102 or WG 102-BSPP16) from the Body. Hold the Body by the flats near the head.

2. Check the fluid condition and level. If the fluid appears to have water contamination or is very dirty, we recommend further disassembly of the tool to clean out the old fluid. Otherwise, drain out as much of the old fluid as possible and add new viscous fluid to cover the top bearing and wave spring.

3. Remove the Seat (MJ 011) and Seal (HC 012-TO) from the bore of the Shaft. Apply grease to a new High Pressure Seal and install in the bore. Install a new Seat on top of the Seal, with the flat face of the Seat facing toward the Seal, as shown.

4. Apply anti-seize to the threads of the Inlet Nut and thread into the Body. Make sure that the Seat stays centered in the bore of the Shaft. Tighten to 50 ft-lb torque.

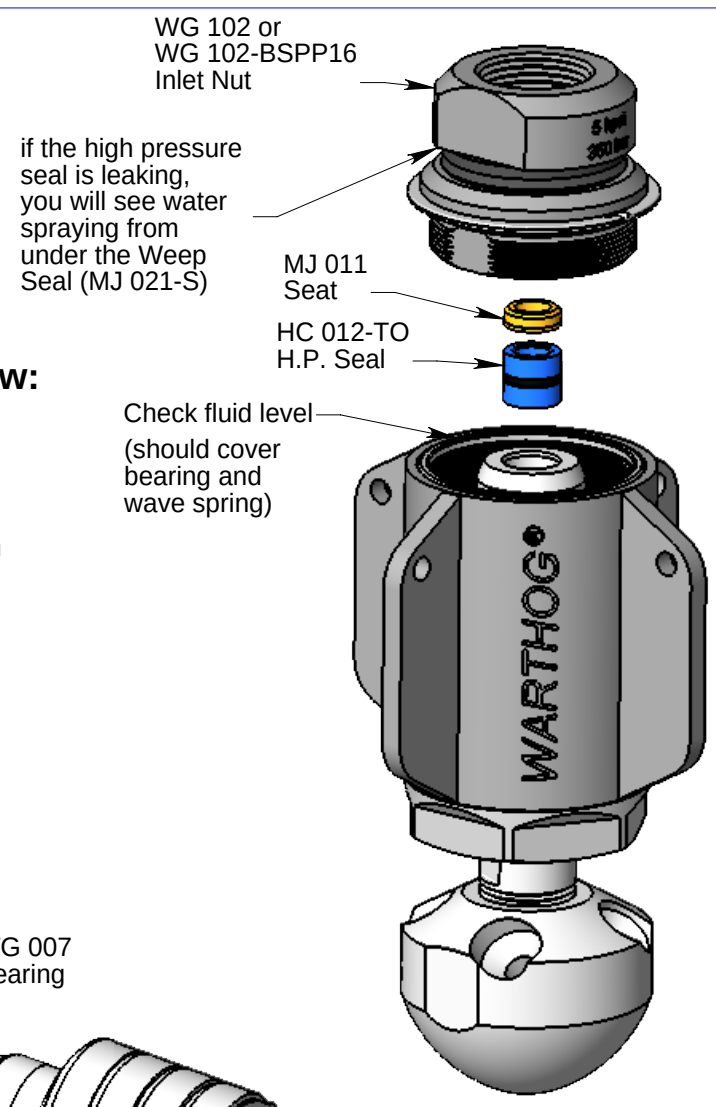

Detailed View:

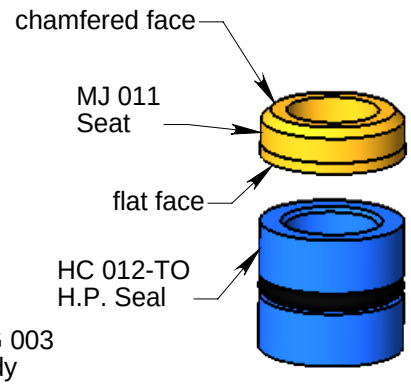

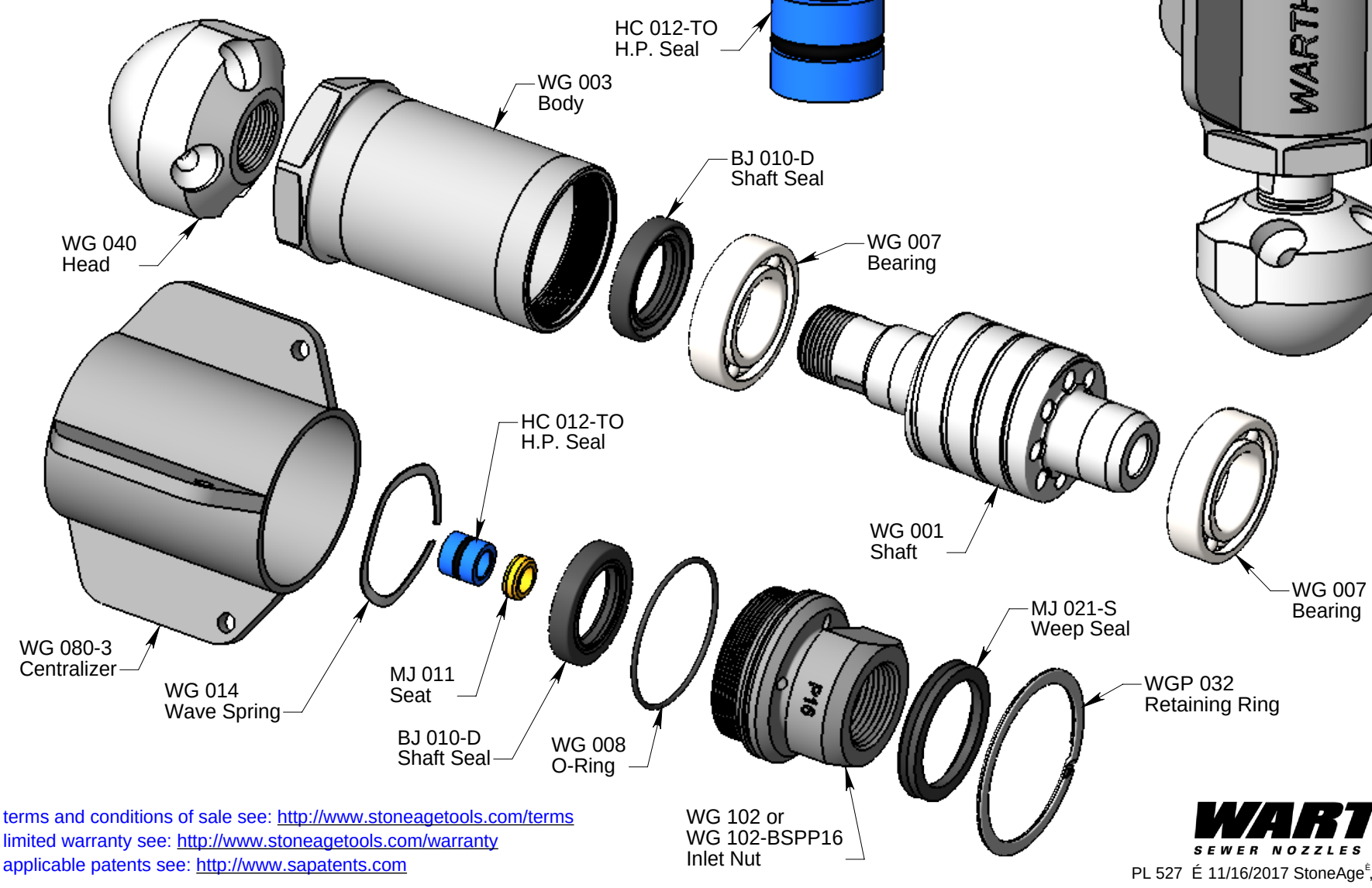

For terms and conditions of sale see: http://www.stoneagetools.com/terms
For limited warranty see: http://www.stoneagetools.com/warranty
For applicable patents see: http://www.sapatents.com

WARTHOG® SEWER NOZZLES BY STONEAGE®

PL 527 É 11/16/2017 StoneAge®, All Rights Reserved

StoneAge® *WARTHOG*® Rotary Sewer Nozzle (WG-1)

Disassembly:

1. Unscrew the Head (WG 040) from the Shaft.

2. Unscrew the Inlet Nut (WG 102 or WG 102-BSPP16) from the Body (WG 003). It is not necessary to remove the Retaining Ring (WGP 032) from the Nut. Pull off the Centralizer (WG 080-3).

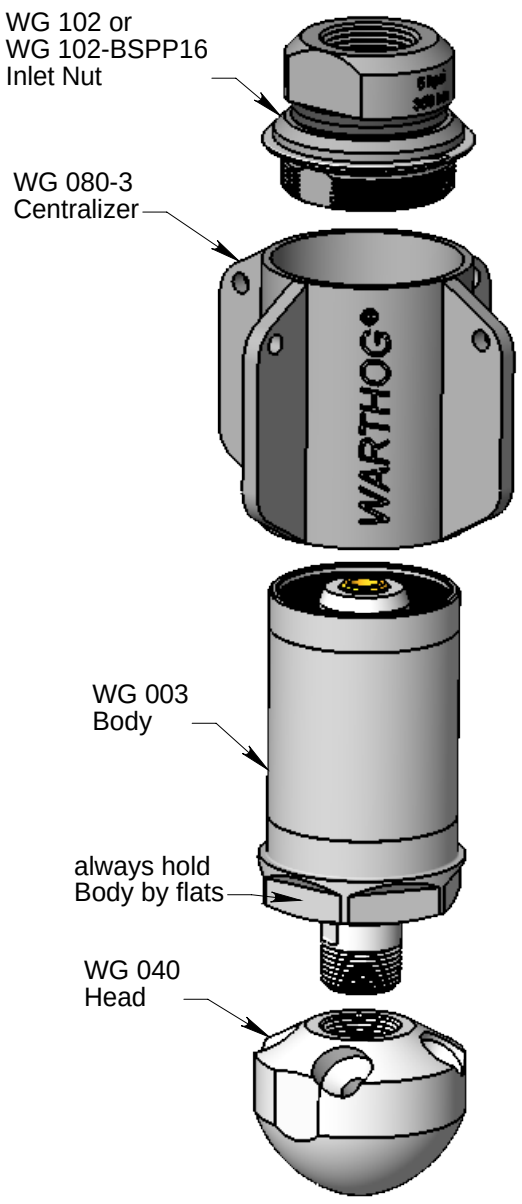

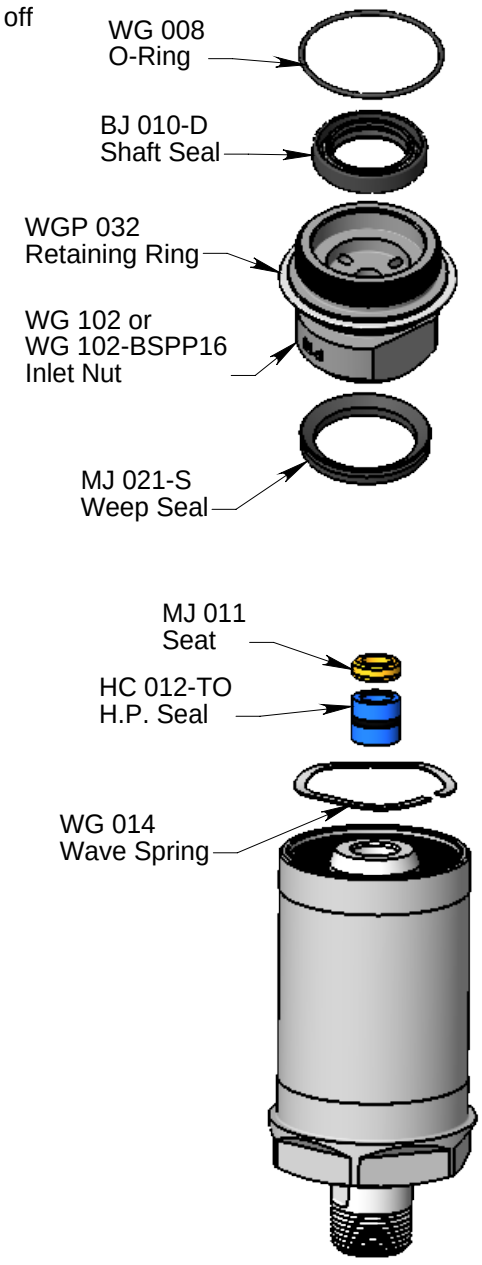

3. Remove the O-Ring (WG 008) and Weep Seal (MJ 021-S) from the Inlet Nut.

4. Remove the Shaft Seal (BJ 010-D) from the Inlet Nut if it appears damaged.

5. Remove the Seat (MJ 011) and Seal (HC 012-TO) from the Shaft bore.

6. Remove the Wave Spring (WG 014).

7. Push the Shaft (WG 001) out of the Body.

8. Remove the Shaft Seal (BJ 010-D) from the Body if it is damaged.

9. Carefully pry the Bearings (WG 007) off of the Shaft. Make sure not to raise any burrs on the large diameter portion of the Shaft with the groove.

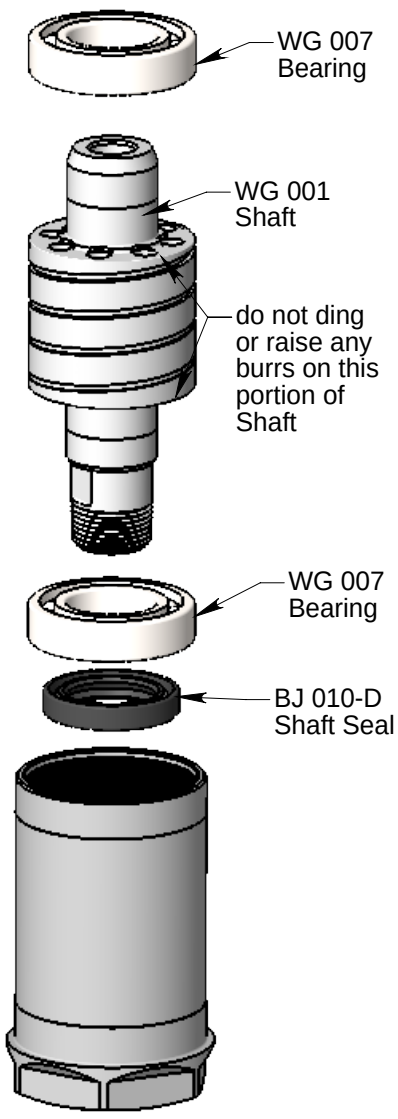

Assembly:

1. Install Shaft Seals (BJ 010-D) in the Body (WG 003) and the Inlet Nut (WG 102 or WG 102-BSPP16). Both seals are installed so the lip with the spring faces up when installing. Apply grease to the lips of the seals.

2. Install O-Ring (WG 008) and Weep Seal (MJ 021-S) on Inlet Nut.

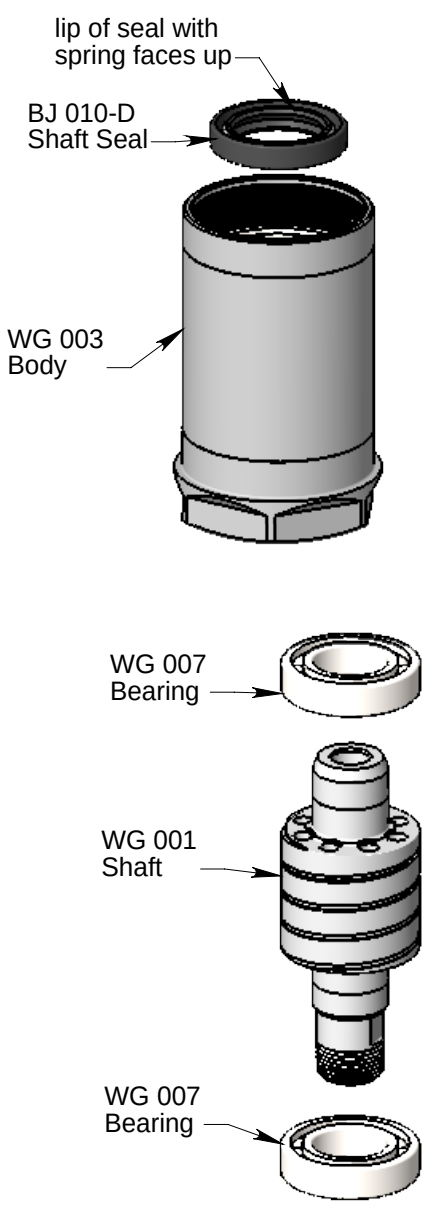

3. Press the Bearings (WG 007) onto the Shaft (WG 001).

4. Place the Centralizer (WG 080-3) over the Body.

5. If you have a Fill Tube (HC 064), insert it thru the Shaft Seal in the Body up to its shoulder. Pour Viscous Fluid into the Body about 1" deep. Insert the Shaft into the Body, allowing the Shaft to push out the Fill Tube. If you do not have the Fill Tube, insert the Shaft into the Body and pour viscous fluid into the Body; allow the fluid to settle down thru the top bearing and around the Shaft and keep adding fluid until it covers the top bearing. It will take about 10 minutes to get the tool full.

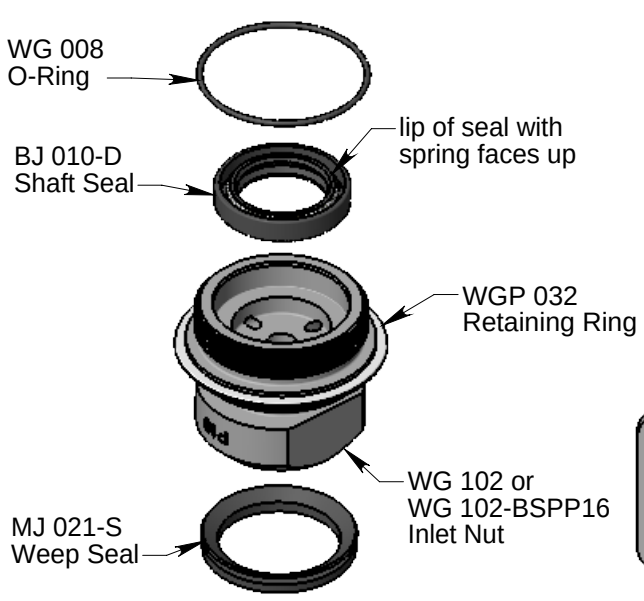

6. Place the Wave Spring (WG 014) on top of the Bearing. Add more viscous fluid until the Wave Spring is covered.

7. Apply grease to the H.P. Seal (HC 012-TO). Insert in bore of Shaft.

8. Place the Seat (MJ 011) on top of the Seal, with the chamfered end up. (See the Maintenance Section)

9. Apply anti-seize to the threads of the Inlet Nut; thread into Body and tighten to 50 ft-lb.

10. Apply teflon tape to the shaft threads and install head.

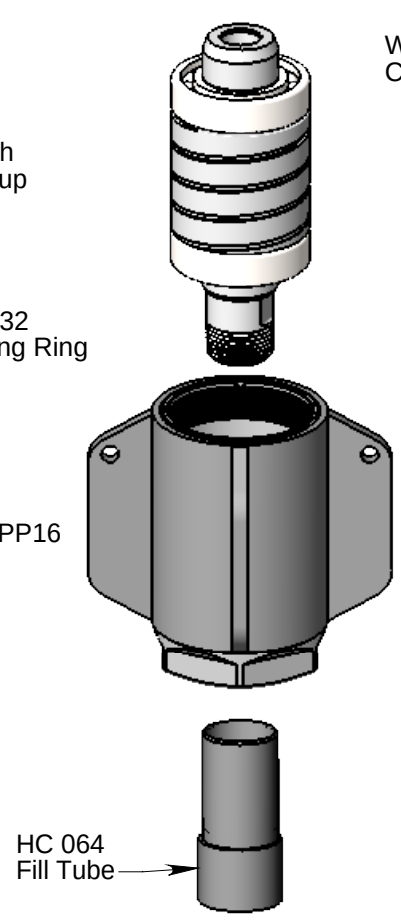

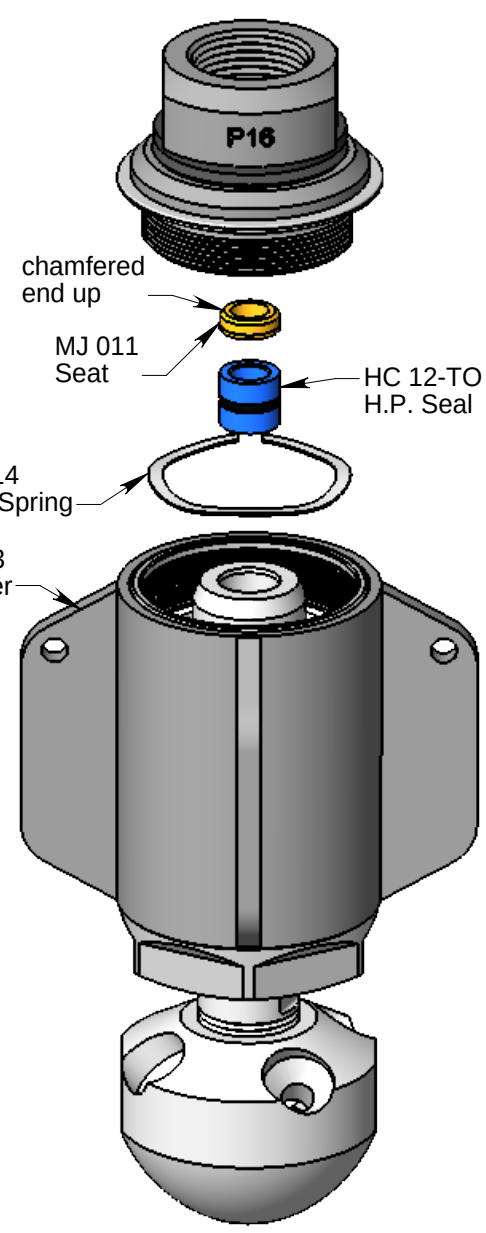

WARTHOG®
SEWER NOZZLES BY STONEAGE®

PL 527 É 11/16/2017 StoneAge®, All Rights Reserved