BPA TRANSIENT STABILITY PROGRAM

```
TTTTTTTT      SSSS       PPPPPP
TTTTTTTT     SSSSSS      PPPPPPP
   TT       SS    S      PP    PP
   TT       SS           PP    PP
   TT       SSSSSSS      PPPPPPP
   TT        SSSSSSS     PPPPPP
   TT              S     PP
   TT        S    SS     PP
   TT        SSSSSS      PP
   TT         SSSS       PP
```

B P A T R A N S I E N T S T A B I L I T Y

P R O G R A M U S E R S G U I D E

METHODS DEVELOPMENT BRANCH
DIVISION OF SYSTEM ENGINEERING
BONNEVILLE POWER ADMINISTRATION
P. O. BOX 3621
PORTLAND, OREGON 97208

8 October, 1986

TABLE OF CONTENTS

Page

1. Legal Notice.....v

2. Introduction.....0-1

3. Program Description 0-1

4. Swing Input Data Cards.....1-1

Sol..... 1-1
Debug.....1-2
Comment.....1-5
Case.....1-6
Line Switching Rules.....1-7
LS--Line Switching.....1-8
LS--Load and Generation Modification.....1-9
LS--Generator DC Component Damping (Fault Damping).....1-10
LS--Fast Valving.....1-12
LS--DC Line Switching (Two Terminal Circuit) 1-15
LS--DC Line Switching (Multi-terminal Circuit) 1-16
LS--Manual Transient Stabilizer Trigger. 1-17
LS—Manual SVS Output Freeze 1-18A
LZ--Branch Immitance 1-18
MZ--Miscellaneous Generator Data 1-19
F1—Swing Solution Control 1-20A
FF--Swing Solution Control.....1-20

M--Notes on Machine Data.....2-0
M--Machine Data (General Info & Damper Winding Data).....2-1
Case--Generalized Damper Winding Data 2-1.1
M--Machine Data (Classical and Two Axis) 2-2
MC--Classical Machine Phasor Diagram 2-2.1
MI--Machine Motor Representation) 2-3

E--Exciter Data (Nomenclature) 3-1
EA--Exciter Data (WSCC Type A - Continuously
Acting DC - Rotating) 3-2
EB--Exciter Data (WSCC Type B - Westinghouse
Brushless,Pre-1967) 3-3
EC--Exciter Data (WSCC Type C - Westinghouse
Brushless, Since 1966) 3-4
ED--Exciter Data (WSCC Type D - SCPT System) 3-5
EE--Exciter Data (WSCC Type E - Non-Continuously
Acting Rheostat) 3-6
EF--Exciter Data (WSCC Type F - Westinghouse
Continously Acting Brushless
Rotating Alternator) 3-7
EG--Exciter Data (WSCC Type G - SCR Equivalent) 3-8

EJ--Exciter Data (WSCC Type J - Grand Coulee PP #3
Static) 3-9
EK--Exciter Data (WSCC Type K - GE Alterrex) 3-10

IEEE EXCITER MODELS
Data Card Format....3-10A
Data Description....3-11
Voltage Transducer....3-15
FA - DC1....3-16
FB - DC2 3-17
FC- AC1 3-18
FD- ST2 3-19
FE- DC3 3-20
FF- AC2 3-21
FF- AC2 (Internal Model) 3-22
FG- AC4 3-23
FH- AC3 3-24
FH- AC3 3-25
FJ 3-26
FK- ST1 3-27
FL- ST3 3-28
Rectifier Regulation 3-29
Saturation characteristic 3-30
Nomenclature 3-31
V--Static Var Source 3-35
W--Static Var Source Supplementary Control 3-36

S--Power System Stabilizer (Data Format) 4-1
S--Power System Stabilizer (Nomenclature) 4-4
ST--Transient Stabilizer....4-5
G--Governor and (Nomenclature)
Turbine Data....5-1
GG--Governor and (General Model)
Turbine Data 5-2
GH--Governor and (Detailed Hydro-Mechanical model)
Turbine Data 5-3
GC--Governor and (Cross Compound Model.)
Turbine Data 5-4
GS--Governor Data (Steam System) 5-5
GW--Governor Data (Hydro System) 5-6
TA--Turbine Data (Non-Reheat) 5-7
TB--Turbine Data (Tandem Compound, Single Reheat) 5-8
TC--Turbine Data (Tandem Compound, Double Reheat) 5-9
TD--Turbine Data (Cross Compound, Single Reheat)....5-10
TE--Turbine Data (Cross Compound, Single Reheat) 5-11
TF--Turbine Data (Cross Compound, Double Reheat)....5-12
TW--Turbine Data (Hydro System)....5-13

Notes on Load Netting....6-0
LN--Load Netting (Netting Selected Generation into Load)....6-1
LB--Load Representation (Load Models A and B) 6-2
Notes on Load Shedding 6-3.0
UF and UV--Load Shedding (Old WSCC) 6-3

UF--Underfrequency Load Shedding (BPA) 6-3
UF UV and UD--Load Shedding (New WSCC) 6-3.2
RS--Underfrequency Load Shedding (CF-1 Relay) 6-4
RM--Generator Underfrequency Relay 6-5
RU--Underfrequency Line Tripping 6-6
RZ A--ZNO Capacitor Protection 6-7
RZ B--Variable Admittance Element (RANI) 6-11
RZ C--Variable Admittance Element (RANI) 6-12
RZ D--Variable Admittance Element (RANI) 6-13
RZ F--Variable Admittance Modulation (RANI) 6-14
RZ G--Variable Admittance Modulation (RANI) 6-16

RG--Series Capacitor Gap Relay (Series Capacitor Gap Oper.) 7-1
RO--Relay Data (Out-Of-Step Blocking Relay) .....
RD--Relay Data (Impedance Relay) 7-2
RLV--Default Distance Relay (Description) 7-2.1
RLV--Default Distance Relay (Equations) 7-2.2
RLV--Default Distance Relay (Format) 7-2.3
RL--Default Distance Relay (Reclosing Data) 7-2.3
RLD--Default Distance Relay Bypass (Format) 7-2.3
WSCC Power Relay (Assumptions) 7-3
WSCC Power Relay (Data Format) 7-4
WSCC Power Relay (Nomenclature) 7-5
Rl--Relay Data (WSCC Type 1 RC Power Relay) 7-7
R2--Relay Data (WSCC Type 2 RC Power Relay) 7-8.1
R3--Relay Data (WSCC Type 3 RC Power Relay) 7-8.2
RR--Remote Relay (Remote Relay Operation) 7-9
Resistance Brake Description 7-10
Guidelines for Use of RB, RC Cards 7-12
RB--Resistance Brake 7-13
RC--Resistance Brake, Early Disconnect 7-14
RV—Voltage difference Load Dropping Relay 7-15

Notes on HVDC Models 8-0
D--DC Converter Control (Data Format) 8-1
DC Converter Control Margin Switching Unit Description
(For Two-Terminal Only) 8-2
DC Line Model 8-3
Multiterminal Rectifier Control 8-4
Multiterminal Inverter Control 8-5
DC--Detailed VDCL and Mode Change (Multiterminal Only) 8-6
DV--DC Voltage Control (Multiterminal Only) 8-7
DT—Simplified DC Control (Two terminal Only) 8-11
DC Modulation Block Diagrams 8-16
DS--DC Low Level Modulation 8-17
DS--DC High Level Modulation 8-18
DS--DC Dual Frequency Modulation... 8-19
DS--Gamma Modulation 8-20
DP—DC Pulse Initiation 8-21

4. Output Selection

Parameter Classification 9-1
Output Analysis Features 9-3

MH--Main Header Card 10-1
SP—Spare Points Output 10-2

BH-Bus Header Card 11-1
B--Individual Bus Card 11-2

GH-Generator Header Card 12-1
G--Individual Generator Card 12-3

LH--Line Header Card 13-1
L--Individual Line Card 13-2
LC--Individual Line Card (Continuation) 13-2.1
R-Rdot Calculation 13-2.2
R-Rdot Trip Line Specification 13-2.3
LM--Line Impedance Modification Card 13-3

DC--DC Header Card 14-1
D-DC Card (All DC Types) 14-2

90--.Output Starting Card 15-1
99--Cutput Ending Card 15-1

Special Plots 16-1
Generator Difference Plots 16-6

5. Appendix

A--Functional Specifications for Western Systems Coordinating Council (WSCC) Load Flow and Stability Computer Programs A-1

B--General Flow Chart Linking Power Flow and Transient Stability Programs B-1

C--Three Examples in Preparing Switching (LS) Cards C-1

Typical Data for Resistance Brake at Chief Joseph C-4
Fast Valving Example C-5

D--Example in Line Impedance Modification in output D-1
D--Resistance Brake Typical Data D-4
D--Examples in DC Line Switching D-6

E--Line Impedance Modification Example E-1

F-Program Logical File Assignments F-1

Bonneville Power Administration
Portland, Oregon

NOTICE TO NON-BPA USERS

Bonneville Power Administration (BPA) releases BPA-developed computer programs under the following conditions:

1. BPA does not charge for program development costs; however a fee to cover costs incurred in answering the request is assessed against the organization receiving the material. This fee typically includes costs for manpower, computer time, reproduction, packaging, and mailing.

2. BPA cannot provide assistance with conversion to other computers, and cannot provide consulting service for the program users.

3. In consideration of receipt and acceptance of the programs and related documentation, you and your organization agree to advise any third-party recipients in writing that the programs and/or documentation are in the public domain and available from BPA in the event that these programs and documentation or portions thereof are sold, assigned, or transferred to other organizations. The intent of this agreement is to assure that BPA-developed or BPA-supplied programs and documentation, whether in whole or in part, which are in the public domain are identified as such to the recipients.

"LEGAL NOTICE"

Neither BPA nor any person acting on behalf of BPA:

1. Makes any warranty or representation, expressed or implied, with respect to the accuracy, completeness, or usefulness of the programs or related documentation; or

2. Assumes any liabilities with respect to the use of these materials or for damages resulting from their use.

TRR 9/30/86

BONNEVILLE POWER ADMINISTRATION
TRANSIENT STABILITY PROGRAM

INTRODUCTION

The BPA Transient Stability Program was developed in accordance with the Western Systems Coordinating Council (WSCC) specifications and was written to be executed on a VAX 11/780 computer. With some exceptions this program closely parallels the program used in Salt Lake City by the WSCC Technical Staff.

Basically, the difference lies in the control card requirements for defining the problem such as fault application, line switching, etc., and the format for all output options. The formats for almost all other input data requirements maintain strict compatibility between these programs. Therefore, with grateful acknowledgements to the WSCC Staff, a substantial portion of the materials used in this manual are reproduced copies taken from the WSCC PROGRAM MANUAL.

Acknowledgement is also given to Teshmont Consultants, Inc. of Winnipeg, Manitoba for their many corrections and additions to the program.

A copy of the WSCC specifications for both power flow and transient stability is included in Appendix A and the program deviations are indicated.

PROGRAM DESCRIPTION

This program provides an effective tool for performing the dynamic simulation of a power system when disturbed from its steady-state condition under various perturbations.

There are basically two methods of solution used in this program. All differential equations are linear and solved by the trapezoidal rule of integration. The network equations are solved iteratively using the triangularized admittance matrix. Both of these methods are described in the paper "Fast Transient Stability Solutions" (IEEE Transactions on Power Apparatus and Systems, July/August 1972) written by Hermann Dommel and Nobuo Sato.

The diagram on B1 of the Appendix shows that the swing program is divided into solution and output portions. The solution portion creates a swing solution file which saves all output data for all buses in the study. This structure allows the user to run the solution portion and save the swing solution file. Then, using the swing solution file, the power flow output file, and the swing output data file, the user can run any number of output jobs without resolving the solution.

The program is designed to run in conjunction with the BPA Power Flow program. The diagram on page B1 shows the interconnection between the Power Flow and the Transient Stability (swing) programs. Note that both the solution and output portions of the swing program require a Power Flow output file as input.

TRR 10/1/86

The program also has a save data feature which allows the user to enter the majority of the swing input data via a save data file and enter only the line switching and FF cards in the swing input file. This is useful when a series of swing studies are run using the same basic data but with different system perturbations.

Appendix C shows examples of how to create a save data file, how to run a study using a save data file, and how to run an output only job using the swing output file. The command files show how to make the necessary logical file assignments on a VAX computer.

The DEBUG and the COMMENT cards are optional. Any information punched on the COMMENT cards appears on the output listing as well as on the plot headings.

The LS switching cards contain a variety of features and enable the user to properly define each event in chronological order. Several examples in preparing LS cards are covered in Appendix D.

The LZ card is used with the LS card and permits changing branch admittance quantities in the transient stability program.

The MZ card has the special feature which permits remote control signals for the power system stabilizer and excitation systems. This card also inputs generation transformer data for low-side generator bus determination not represented in the power flow but required for the excitation system.

Several control parameters and codes are available to the user and are entered in the DEBUG, CASE, FF, and 99 cards. The CASE card and the 99 card have print options and the FF card contains several control parameters and codes for proper operation. The user is cautioned that using the DEBUG card may produce a very large output file.

The output portion of the program provides the output data in the form of listings and/or plots. The plotting routines were written for a VERSATEC plotter and this code is not very portable.

If line impedances were modified during the solution portion of the program, to correctly output data for these lines the output portion of the program must be given the modified impedances via line modification (LM) cards. Appendix E gives an example of how to use LM cards.

Requested by _____ Ext No. _____ Job code _____

BONNEVILLE POWER ADMINISTRATION
FORTRAN CODING FORM

Project _____ Sheet ___ of ___

Statement No. | CONT | SOL CARD | Identification

SØL

LCØMP IFLTSW INEWTS

THE 'SØL' CARD ALLOWS THE USER TO SELECT VARIOUS NETWORK SOLUTION OPTIONS. IT SHOULD COME BEFORE THE CASE CARD IN THE INPUT FILE. IF NO 'SØL' CARD IS PRESENT, THE DEFAULT OPTIONS ARE USED.

LCOMP = 1 DON'T RELOCATE COMPENSATED LINES TO THE BOTTOM OF THE ADMITTANCE MATRIX.

= 2 RELOCATE COMPENISATED LINES (DEFAULT)

IFLTSW = 1 FAULTED BUS IS RELOCATED TO THE BOTTOM OF THE MATRIX

= 2 FAULTED BUS IS NOT RELOCATED (DEFAULT)

INEWTS = 1 NETWORK SOLUTION USES THE ADMITTANCE MATRIX (DEFAULT)

= 2 NETWORK SOLUTION USES NEWTONS METHOD

TRR 02/12/87

BPA 192 Rev. 1 12-62

Requested by _____ Ext No. _____ Job code _____

BONNEVILLE POWER ADMINISTRATION
FORTRAN CODING FORM

Project _____ Sheet _____ of _____

Statement No.	CONT	STATEMENT	Identification

DEBUG CARD

	7	42	51	56	61	66	71	76
DEBUG			T_1.	T_2.	T_3.	T_4.	T_5.	T_6.
			F5.1	F5.1	F5.1	F5.1	F5.1	F5.1

COLUMNS 7-42 ARE DEBUG SWITCHES. A ZERO OR BLANK TURNS THE SWITCH OFF. A NON BLANK TURNS THE SWITCH ON. SEE THE FOLLOWING PAGE FOR A DESCRIPTION OF THE VARIOUS OPTIONS AVAILABLE.

$T_1, T_2, T_3, T_4, T_5, T_6$ ARE TIME WINDOWS. IF THESE TIMES ARE NOT ZERO THEN THE DEBUG SWITCHES WILL BE TURNED ON ONLY DURING THESE TIMES. FOR EXAMPLE:

IF T_1 AND T_2 ARE NON ZERO THE DEBUG SWITCHES WILL BE ON WHENEVER $T_1 \leq T \leq T_2$

THE SAME HOLDS TRUE FOR T_3, T_4 AND T_5, T_6

TRR 8/11/86

BONNEVILLE POWER ADMINISTRATION, PORTLAND, OREGON

BPA 192 Rev. 3-12-62

DEBUG OPTIONS

COLUMN	DEBUG OPTION
7	INITIAL CURRENT ERROR USING THE POWER FLOW SOLUTION VOLTAGE. SOLUTION VOLTAGE TABLE IN SUBROUTINE DERIV.
8	RELAY,CAPACITOR, AND BRAKE TABLES. Y MATRIX BY ROWS IN SUBROUTINE REDUCE.
9	RELAY DATA TABLES.
10	IDSW, DAMPN, DTSC, AND DTSJ VARIABLES. MACHINE VARIABLES USED IN DIFFERENTIAL EQUATION SOLUTION. MACHINE TABLES USED IN GENDROP.
11	INITIAL Y MATRIX.
12	MACHINE DATA TABLES IN SUBROUTINES CNTRL AND CNTRLA.
13	NOT USED.
14	CROSS REFERENCE TABLES OF EXTERNAL, OLD, AND NEW BUS NUMBERS.
15	ECS ADDRESSES.
16	SUPPLEMENTARY SIGNAL INPUT DATA.
17	CURRENT VECTOR AT EACH NETWORK SOLUTION.
18	VOLTAGE VECTOR AT EACH NETWORK SOLUTION.
19	REDUCED Y MATRIX BY ROWS.
20	CURRENT VECTOR IN SUBROUTINE DERIV.
21	MAXIMUM CURRENT ERROR AT CONVERGENCE.
22	MAXIMUM CURRENT ERROR AT EACH ITERATION.
23	INITIAL RELAY DATA. LOAD SHEDDING TABLES. GENERATOR POWER TABLES. YMTRX IN DC LOGIC.
24	NOT USED.
25	MACHINE DATA TABLES IN SUBROUTINE CNTRL.

TRR 10/1/86

COLUMN	DEBUG OPTION
26	YE PRODUCT FOR GENERATORS.
27	INPUT DATA.
28	NOT USED.
29	DC DATA.
30	MACHINE VARIABLES IN SUBROUTINE INPUT3.
31	MACHINE VARIABLES IN SUBROUTINE INITIAL2.
32	INITIAL LOAD REPRESENTATION TABLES.
33	SATURATION CALCULATIONS.
34	NOT USED.
35	GENERATOR POWER TABLES IN SUBROUTINE DERIV.
36	CROSS REFERENCE TABLE OF BUS NUMBER TO GENERATOR NUMBER.
37	YMATRIX TABLES IN SUBROUTINE MATMOD. DC DATA TABLES IN SUBROUTINE DCSUB. DNX,DNXRLY IN SUBROUTINE CNTRL.
38	LOAD SHEDDING.
39	LOAD SATURATION DATA. CHANGE CARD DATA IN SUBROUTINE INPUT1.
40	SIMPLIFIED DC LINE MODEL.
41	ZNO MODEL.
42	NOT USED.

TRR 10/1/86

Requested by _____ Ext No. _____ Job code _____

BONNEVILLE POWER ADMINISTRATION
FORTRAN CODING FORM

Project _____ Sheet _____ of _____

Statement No.	CONT	STATEMENT	Identification

COMMENT CARD

```
C
```

THE COMMENT CARD ALLOWS THE USER TO ENTER DISCRIPTIVE COMMENTS ABOUT THE CASE BEING RUN. ALL COMMENT CARDS ARE PRINTED ON THE PROGRAM LISTING AND THE PLOTS PRODUCED BY THE PROGRAM. THE PROGRAM ALSO RECOGNIZES A CARD WITH BLANKS IN COLUMNS 1 AND 2 AS A COMMENT CARD. COLUMNS 3-80 ARE AVAILABLE FOR COMMENTS.

TRR 8/14/86

BONNEVILLE POWER ADMINISTRATION, PORTLAND, OREGON

BPA 192 Rev. 3-12-62

LINE SWITCHING CARDS

Line switching (LS)cards enable the user to apply various kinds of disturbances to the network model. The following are some of the rules regarding use of the LS cards:

(1) Up to 100 LS cards may be entered for a study.

(2) LS cards may be entered in any order. The program will automatically sort them in order of increasing switching time.

(3) The program requires one LS card to be entered that specifies an AC fault at 0.0 cycles. If the user does not wish to apply a fault at 0.0 cycles, a "dummy" switching card may be entered such as:

```
LS  STATIONN500.  STATIONS500. 2  -1   0.0
```

The -1 in columns 36 and 37 make this a do nothing card which will have no effect on the network but will satisfy the criterion that an AC fault card be entered for 0.0 cycles. The program will accept other types of switching cards, including DC disturbances, at 0.0 cycles.

(4) Three-phase faults at more than one bus are not accepted by the program. However, line-to-ground faults at more than one bus are acceptable. The user may approximate multiple three-phase faults with multiple line-to-ground faults by entering a very small FAULT X in columns 52-57.

(5) If the impedance of a branch is changed during the stability run using LS and LZ cards, it is necessary to use the line impedance modification card (LM) in the output data to correctly output line variables for that branch.

Some examples for using the LS cards are included with the LS card formats and other examples may be found in appendix D.

BONNEVILLE POWER ADMINISTRATION

FORTRAN CODING FORM

Requested by _____ Ext No. _____ Job code _____ Project _____ Sheet ____ of ____

Statement No.	CONT	STATEMENT	Identification
		CASE CARD	
		ITSKP NOPRNT IWSCC	
CASE		PFCASE 5 DATA IN 5 DATA OUT	
		A10 I1 I1 I1 A10 A10	
1		6 17 20 23 25 35	

The case card follows the DEBUG and SOL cards, or if no DEBUG and SOL cards are used, the case card is the first card in the data deck.

PFCASE — Power flow case name. This name must match the power flow case name on the Power Flow saved data file.

ITSKP — If ITSKP is two or greater, the program will write data to the TSP data history file every ITSKP time steps and at each discontinuity. If ITSKP is blank or one, data will be written each time step.

NOPRNT — If NOPRNT is blank, only the LS, LZ, and FF cards will be listed by the program. If NOPRNT is nonblank, all data cards will be listed.

IWSCC — If IWSCC is blank or zero, the program will read the BPA underfrequency load shedding format and the old WSCC underfrequency load shedding format. If IWSCC is greater than zero, the program will read the BPA underfrequency load shedding format and the new WSCC underfrequency load shedding format.

SDATAIN — The name of an existing saved data file to be used as a source of data.

SDATAOUT — The name of the saved data file to be created.

TRR 9/18/86

Requested by _____ Ext No. _____ Job code _____

BONNEVILLE POWER ADMINISTRATION
FORTRAN CODING FORM

Project _____ Sheet ____ of ____

Statement No. | CONT | STATEMENT | Identification

LINE SWITCHING

LS	SIGN	BUS A	B1	SIGN	BUS B	B2	PAR	MDE	CYCLE	FAULT R	FAULT X	PERCNT
	A1	A8	F4.0	A1	A8	F4.0	R1	I2	F6.0	F6.0	F6.0	F6.0
1	4 5		13	18 19		27	32	36 37	40	46	52	58

LS cards are used for problem modification--short circuits, line switching, load and generation dropping.

BUS A Bus name at one end of the line as defined in the power flow.

B1 Base KV for BUS A.

BUS B Bus name at other end of line as defined in the power flow.

B2 Base KV for BUS B.

PAR Parallel branch coding of line.

SIGN (columns 4,18) A minus in either or both of these columns indicates that the breaker is opened at the corresponding end. A blank indicates the breaker is closed.

MDE Code to indicate type of fault.
1 3 phase fault on line side of breaker at BUS A
2 3 phase bus fault at BUS A
3 3 phase fault on the line PERCNT per cent from BUS A
A minus punched in column 36 indicates a non-short circuit condition.

CYCLE Time in cycles when the switching occurs.

FAULT R, FAULT X Per unit impedance to be inserted in series at the fault point to simulate various short circuit conditions. Such as line to line, line to ground, etc.

PERCNT Specifies the per cent of the total distance of the line from BUS A to the fault. Must be non-zero if MDE is 3.

BONNEVILLE POWER ADMINISTRATION

FORTRAN CODING FORM

Requested by _____ Ext No. _____ Job code _____ Project _____ Sheet ____ of ____

Identification

Statement No. | CONT

LOAD AND GENERATION MODIFICATION

| | | |

Requested by _____ Ext No. _____ Job code _____

BONNEVILLE POWER ADMINISTRATION

FORTRAN CODING FORM

Project _____ Sheet _____ of _____

Statement No.	CONT	STATEMENT	Identification

GENERATOR DC COMPONENT DAMPING (FAULT DAMPING)

LS	BUS A	B1	ID	MDE	CYCLE	GDAM
	A8	F4.0	R1	7	F6.0	F5.0
5		13	17	37	40	46

BUS A -- Bus Name Identified with the Generator

B1 -- Base kV for Bus A

ID -- Generator ID

MDE -- Must be 7 for this Card

CYCLE -- Time Instant in Cycles for Damping Application

GDAM -- Amount of Damping to be Applied in Percent (I.E. Ten percent will be entered as 10.)

DC OFF-SET DAMPING (FAULT DAMPING)

Fault damping can be applied to a total of 5 machines, in varying amounts and at different times. HP & LP machines are counted separately, and may have different fault damping. It can be removed in similar manner. Removal of fault damping is recognized by a negative value for GDAM. The first fault damping card must be preceded by a fault card (a dummy fault card if there is no fault to be applied).

Fault damping will reduce the mechanical input to a generator by the specified percentage amount at the time specified. Thus, fault damping can be used to perturb an otherwise steady-state system.

REV 7/28/75

FAULT DAMPING OF A GENERATOR

PURPOSE: Simulation of machine damping due to off-set dc currents caused by a three phase fault.

DESCRIPTION: A simultaneous three phase short circuit at the machine terminals (or very close to it) causes off-set dc currents in at least two phases. These currents decay to zero with a certain time constant. The power loss due to these currents in the machine acts as a damping torque and in reality is decaying with respect to time for the duration of the fault. The simulation provides for the following two options:

1) Introduce a certain amount of damping at a specified time and remove all of it at a later specified time.

2) Introduce a certain amount of damping at a specified time and remove it in discrete steps at specified times.

Whereas the first option is very simple and requires only two cards, the second option can, to some extent, simulate the actual decaying of the damping torque.

It is expected that this damping is applied and removed only for the duration of a three phase fault since only this type of fault will create the off-set currents.

Damping to be applied will be specified as a certain percentage of the machine electrical power just prior to the fault. A maximum of 100% damping is allowed. If more than 100% damping is asked for, the job will be aborted with an appropriate message.

EXAMPLES:

1) A 15% damping is applied to GEN 1 at 0.0 cycles and all of it is removed at 5.0 cycles.

```
LS  GEN 1   13.81                    7  0.0   15.
LS  GEN 1   13.81                    7  5.0   -15.
```

2) A 15% damping is applied to GENR020 at 7.0 cycles and is removed in the following manner: 8% at 8.0 cycles, 5% at 9.0 cycles and 2% at 11.0 cycles.

```
LS  GENR020 12.51                    7  7.0    15.
LS  GENR020 12.51                    7  8.0    -8.0
LS  GENR020 12.51                    7  9.0    -5.0
LS  GENR020 12.51                    7  11.0   -2.0
```

NOTE: Offset damping and generation dropping are not permitted on a given machine simultaneously.

TRR 10/11/76

BONNEVILLE POWER ADMINISTRATION

FORTRAN CODING FORM

Requested by _____ Ext No. _____ Job code _____ Project _____ Sheet ____ of ____

Statement No. (1–5)	Continuation (6)	Statement (7–72)	Identification (73–80)
LS		BUS A B1 ID MDE CYCLE PWR1 SEC1 PWR2 SEC2	
		A8 F4.0 R1 8 F6.0 F5.0 F5.0 F5.0 F5.0	
5		13 17 37 40 46 51 56 61	

FAST VALVING

BUS A -- Bus Name of Generator Location

B1 -- Base kV for Bus A

ID -- Generator ID

MDE -- Must be 8 for this card

CYCLE -- Time Instant in Cycles When the Break Point Happens

PWR1 -- Power in Percent at the Break Point

SEC1 -- Time in Seconds at the Break Point

PWR2 -- Power in Percent at the Next Break Point

SEC2 -- Time in Seconds at the Next Break Point

Note: All Other Columns are Blank

REV 7/28/75

FAST VALVING EXAMPLE

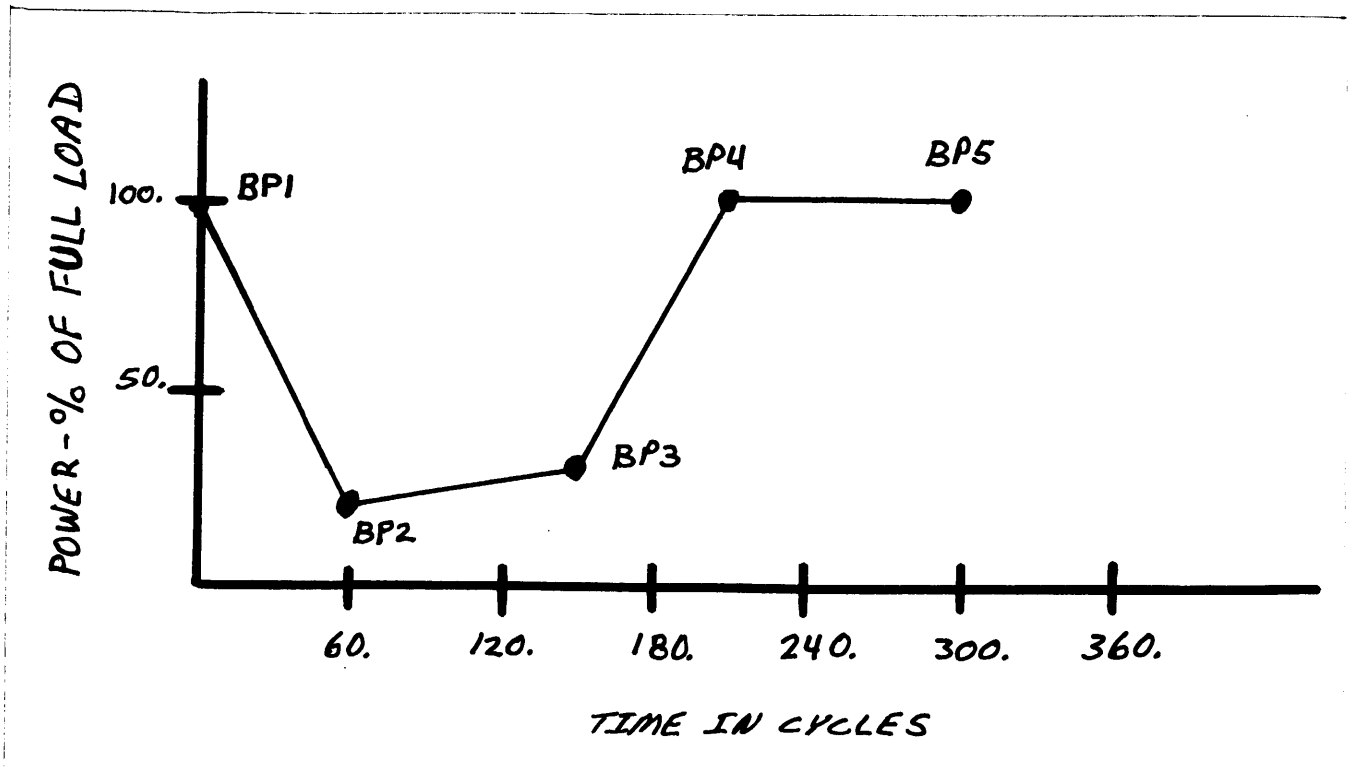

REQUIRED LINE SWITCHING CARDS

```
LS  GEN 1   13.81                    8    0.0  100. 0.0   20.  1.0
LS  GEN 1   13.81                    8   60.    20. 1.0   30.  2.5
LS  GEN 1   13.81                    8  150.    30. 2.5  100.  3.5
LS  GEN 1   13.81                    8  210.   100. 3.5  100.  5.0
```

The program requires the user to "piece-wise" linearize the desired power-decay curve as shown in the above diagram. BP1 through BP5 are the break-points where the linear elements are joined. For the above case, four switching cards (LS) cards are required to describe the curve. The first card, which contains coordinates of BP1 and BP2 (in that order), determines the slope of the segment BP1-BP2. This slope will describe the power decay curve from the time instant in columns 40-45 (0.0 cycles) to the time instant on the next fast valving LS card (60. cycles). Please note that the coordinates of the break-points are used only to calculate the slope. Thus, the time coordinate for BP1 need not exactly match the time instant on the first LS card. The only requirement is that the time coordinate for BP1 be less than that for BP2. This same procedure is then followed for all the subsequent fast valving cards. BP5 is only required to reestablish the slope value to zero. Thus BP5 could be anywhere after BP4.

TRR 9/30/86

One hundred percent power on the power decay curve corresponds to steady-state (0.0 minus cycles) mechanical output for the corresponding machine. When fast valving is required for a certain machine, any governor specified will be ignored. It becomes the user's responsibility to keep the machine mechanical power output within proper limits by properly defining the break-points. If BP1 is later than time t = 0.0, the program defines that part of the power decay curve automatically with zero slope and the user need not supply any card for t = 0.0 to when BP1 is encountered.

A total of only 10 machines are permitted to have fast valving in any given run. High pressure and low pressure machines are counted separately and they can have different power decay characteristics.

BONNEVILLE POWER ADMINISTRATION

FORTRAN CODING FORM

Requested by _____ Ext No. _____ Job code _____ Project _____ Sheet ____ of ____

Statement No. | CONT | Identification

TWO TERMINAL DC LINE SWITCHING

| | | |

DATA CARD LAYOUT

MULTI TERMINAL DC LINE SWITCHING AND MODIFICATION

LS	SIGN	BUS A	KV1	SIGN	BUS B	KV2	SIGN	IØPT	MDE	CYCLE	BLØCK ANGLE (DEG.)	DPIØRD (MW)(kA)	PERCNT	ARDC (Ω)	ELDC (mH)
1–2	3	4–12	13–16	17	18–26	27–30	31	32–33	34–36	37–39	40–45	46–51	52–57	58–63	64–75
A1		A 8	F4.0	A1	A 8	F4.0		I2		I1	F6.0	F6.0	F6.0	F6.0	F6.0	F6.0

Column

Column		
1-2	LS	-- Required code
3	blank	
* 4	SIGN	-- A minus sign denotes open breaker
5-12	BUS A	-- Bus name or Bus name at one end of branch
13-16	KV 1	-- Base kV for Bus A
17	blank	
* 18	SIGN	-- Same as for column 4
* 19-26	Bus B	-- Bus name at the other end of the branch
* 27-30	KV 2	-- Base kV for Bus B
31	blank	
** 32	SIGN	-- A blank permits the action defined in the next column; a minus sign negates the same (Minus sign not applicable to IØPT = 5,6,7)
33	IØPT	-- Code to denote type of action 1. Fault on DC Bus A 2. Fault on DC branch (BUSA - BUSB) PERCNT % from BUS A (Not Available) 3. Blocking of all rectifiers in the DC circuit to which Bus A belongs 4. Blocking of rectifier specified by Bus A 5. Trip or reclose DC branch (BUSA - BUSB) # 6. Current order step change for the valve denoted by Bus A # 7. Power order step change for the valve denoted by Bus A
34-36	Blank	
37	MDE	-- 6 (required)
38-39	blank	
40-45	CYCLE	-- Time in cycles when action occurs
46-51	BLØCK ANGLE	-- Blocking angle in degrees to be applied for IØPT = 3,4. Default value is 135°
52-57	DPIØRD	-- For IØPT = 6, step change in Current Order in kA. Negative value denotes decrease in current order value. A 9 in Col. 53 denotes 100 percent current order change (- sign in Col. 52 for negative change) -- For IØPT = 7, step change in Power Order in MW. Negative value denotes decrease in Power Order value.

Column

Column		
58-63	PERCNT	-- Specifies length from Bus A to fault location as percent of total line length. Must be greater than zero and less than 100.0 when IØPT = 2 (Not Available)
## 64-75	ARDC, ELDC	-- Resistance (ohms) and Inductance (mH) of a DC line to be reclosed in place of a previously tripped DC Branch. Original data will be used when both ARDC and ELDC are zero.

Note:

* These fields are ignored when IØPT = 1,3,4,6, and 7

** This field is ignored when IØPT = 5,6,7. To open a branch, both columns 4 and 18 should contain a minus sign. DPIØRD is handled accumulatively and not initialized each time.

\# This option not permitted for inverter with current margin control. Control mode of the valve (i.e., power/current order control) must match with the option requested.

This feature can be used to simulate introduction of a new DC branch. In power flow, a branch is defined between Bus A and Bus B with very high values of R and L. During the stability study, this branch is tripped at the proper instant and reclosed with appropriate data.

91-1

Requested by _____ Ext No. _____ Job code _____

BONNEVILLE POWER ADMINISTRATION
FORTRAN CODING FORM

Project _____ Sheet ____ of ____

Statement No.	CONT	STATEMENT	Identification

```
                                   ID                  CDE  MDE
LS    BUS       B1                                       9   CYCLE
1     5         13  17                                  33  37  40
```

MANUAL TRANSIENT STABILIZER TRIGGER

BUS	A8	GENERATOR BUS NAME
B1	F4.0	GENERATOR BASE KV
ID	A1	GENERATOR ID
CDE	I1	CODE MUST BE BLANK OR ZERO
MDE	I1	MUST BE '9'
CYCLE	F6.0	TIME IN CYCLES WHEN STABILIZER IS TRIGGERED

TRR 6/29/87

Requested by _____ Ext No. _____ Job code _____

BONNEVILLE POWER ADMINISTRATION
FORTRAN CODING FORM

Project _____ Sheet ____ of ____

Statement No.	CONT	STATEMENT	Identification

BRANCH IMMITANCE

LZ	BUS A	B1	BUS B	B2	PAR	GI	BI	RIJ	XIJ	GJ	BJ
	A8	F4.0	A8	F4.0	R1	F7.4	F7.4	F7.4	F7.4	F7.4	F7.4
1–5	13		19	27	32	38	45	52	59	66	73

This card is prepared only if a branch impedance used in the power flow program is to be modified during the swing calculation other than the normal switch and reclosing of the original branch impedance defined in the power flow.

BUS A Bus name at one end of the line.

B1 Base KV for BUS A.

BUS B Bus name at other end of the line.

B2 Base KV for BUS B.

PAR Parallel coding for this line. This code must be unique for the line defined.

GI,BI The admittance leg to ground at BUS A of the line's Pi equivalent.

RIJ,XIJ The through or transfer impedance of the Pi equivalent.

GJ,BJ The admittance leg to ground at BUS B.

If the admittance leg of one side is zero or blank, it is set equal to the admittance leg of the other side.

BONNEVILLE POWER ADMINISTRATION

FORTRAN CODING FORM

Requested by _____ Ext No. _____ Job code _____ Project _____ Sheet ____ of ____

Statement No. | CONT | STATEMENT | Identification

```
                                 ID        CDE  MDE
LS    BUS       B1               1         9    CYCLE
1     5         13               17        33   37   40
```

MANUAL SVS OUTPUT FREEZE

BUS	A8	SVS BUS NAME
B1	F4.0	SVS BASE KV
ID	A1	SVS ID
CDE	I1	CODE MUST BE '1'
MDE	I1	MUST BE '9'
CYCLE	F6.0	TIME IN CYCLES WHEN SVS OUTPUT IS FROZEN

JRR 6/29/87

184

DATA CARD LAYOUT

MZ - MISCELLANEOUS GENERATOR DATA

1–2	3	4–15	12–15	16	17–28	25–28	29–37	34–37	38–39	40–51	48–51	52	53–64	61–64	65–68	69–72	73–76	77–80
MZ		NAME	KV	ID	NAME R	KV R	XT	RT		NAME F	KV F		NAME V	KV V	A	B	C	D

Column	
1	Type - M
2	Subtype - Z
3	Blank
4-15	Bus Name, Bus Base - kV in columns 12-15
16	Machine Identification (alphanumeric
*17-28	Name R, KV R - Bus Name, Bus Base kV of a remote bus to be voltage regulated.
**29-37	XT, RT - Reactance and resistance of a generator transformer -- in per unit (on system base defined in the Power Flow)
38-39	Blank
*40-51	Name F, KV F - Bus Name, Bus Base kV of a remote bus which supplies bus frequency signal for Power System Stabilizer (PSS) Subtype F
52	Blank
*53-64	Name V, KV V - Bus Name, Bus Base kV of a remote bus which supplies bus voltage signal for PSS
***65-80	A,B,C,D, - Constants for PSS notch filter

Notes:

* Only when these fields are blank the generator terminal is assumed to be the bus for the particular function

** Used if only the generator high side is represented in the power flow. Using XT, RT the low side is then established in the Transient Stability Program.

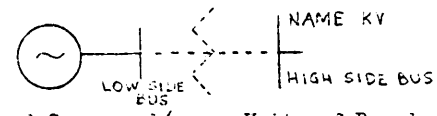

*** D must be a positive number to define the PSS filter. Units of A and C are rad/sec. Units of D and B are rad^2/sec^2.

$$In \rightarrow \boxed{\frac{s^2+As+B}{s^2+Cs+D}} \rightarrow \phi out$$

PSS Notch Filter

1-19

FF CARD

Statement No.	CONT	1–5	6–8	9–12	13–16	17–18	19–22	23–26	27–32	33–36	37–41	42–44	45–48	49–51	52–54	55–57	58–59	60–61	62–63	64–65	66–67	68–69	70–71	72–73	74–75	76–77	78–79	80
		T	F3.0	DT	F3.1	ENDT	F5.1		DTC	F3.1		ISTP	F3		TOLI	F5.5		ILIM	I3		DELANG	F4.4		DTDV	F2.0		DMPMLT	F3.3	
		1	5	9		13			19			23			27			33			37			42			45		

		46–48	49–51	52–54	55–57	58–59	60–61	62–63	64–65	66–67	68–69	70–71	72–73	74–75	76–77	78–79	80
			DTSC	F2.0	DTSJ	F2.0	FRQBSE	F2.0	LOVTEX	IMBLOCK	MRELAY	MFDEP	LSOLQIT	NOANGLIM	INFBUS	NODQ	NOGV	NOEX	NOSC	NOLOAD
			49		52		55		58	60	62	64	66	68	70	72	74	76	78	80

This card contains the various time definitions and tolerances used in the program. It also signals to the program that all input data cards have been read. Thus, the FF card must be the last card in the input data file.

T	Starting time in cycles. Default is 0.0.
DT	Initial time interval in cycles. Default is 2.0 cycles.
ENDT	Calculations will terminate when this time in cycles is reached. Default is 300. cycles.
DTC	Program will switch to this time step after ISTP time steps have been completed following the last discontinuity. Default for DTC is DT. Default for ISTP is 15.
TOLI	Sets tolerance for maximum accelerating power difference of two successive iterations. Default is .01 pu.
ILIM	Maximum number of network-differential equation solutions allowed for one time step. Default is 25.
DELANG	Sets tolerance for maximum angle difference of two successive iterations. Default is .1 degrees.
DTDV	Establishes DC time step defined as DT/DTDV. Default is 8.0.
DMPMLT	Multiplier applied to each machine damping factor. Default is 1.0.
*DTSC	Establishes timestep for exciter C as DT/DTSC.
*DTSJ	Establishes timestep for exciter J as DT/DTSC.
FRQBSE	Base system frequency in Hertz. Default is 60. Hertz.
LOVTEX	A 1 punched in this column will bypass the 0.4 pu low voltage check in VTCHK.
*IMBLOCK	
*MRELAY	A 1 punched in this column will disable all line relays for the first 10 cycles of a study.
MFDEP	b = no frequency dependence; 1 = frequency dependence in both swing and stator equations; 2 = frequency dependence stator equations only; 3 = frequency dependence swing equation only; 4 = frequency dependence mechanical torque only.
LSOLQIT	A 1 in this column will cause the swing solution to halt on non-convergence.
NOANGLIM	A 1 in this column will bypass the 500 degree angle limit check in MAXMIN.
INFBUS	A 1 in this column will convert all generators into infinite inertia machines.
NODQ	A 1 in this column will cause all machines to have classical representation.
NOGV	A 1 in this column will cause all governor data to be ignored.
NOEX	A 1 in this column will cause all exciter data to be ignored.
NOSC	A 1 in this column will cause all supplementary signal data to be ignored.
NOLOAD	A 1 in this column will cause all loads to be represented as constant impedances.

*NOT IN USE

TRR 9/17/86

BONNEVILLE POWER ADMINISTRATION, PORTLAND, OREGON

BPA 192 Rev. 3-12-62

Figure 1-1 . F1 Record Format

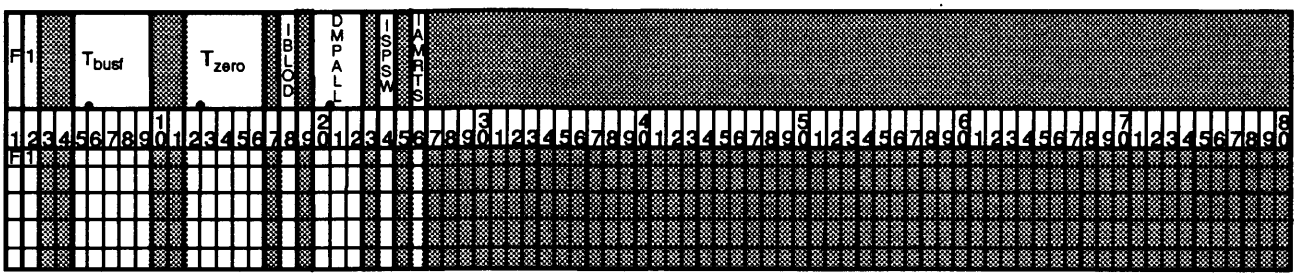

The F1 record contains optional program parameters and, if used, must precede the FF card in the input data file. Its format is shown in Fig 1-1 and in Table 1-1.

Table 1-1. Column layout of F1 Record

Variable	Units	Description
T_{busf}	seconds	A time constant for filtering bus frequency used with frequency sensitive loads and under frequency load shedding. If T_{busf} is nonzero, the bus frequency obtained from the output portion of the program will also be filtered. The default value is 0.05.
T_{zero}	seconds	A default time constant for measuring circuits. If a measuring circuit time constant is less than T_{zero}, it will be set equal to T_{zero}. The default value is 0.0. The following time constants apply: • In all exciter models: TR. • In the SVS model: TS1, TS7, TS10, TS5 if TS4 is not zero. • In the PSS model: TQV, TQS.
IBLOD		This is the bus load switch. If IBLOD is nonzero, the program will write the real and reactive bus loads to the solution history file and bus loads can be output. Default is zero.
DMPALL		This is a default machine damping factor. If DMPALL is nonzero, all machines in a study will have a damping factor equal to DMPALL. The damping multiplier, DMPMLT, which is entered on the FF card will not modify DMPALL. The default value is 0.0.
ISPSW		If ISPSW is nonzero, an array of 10 spare data points is written to the solution history file at each time step. Check with a programmer for details. The default value is zero.
IAMRTS.		If IAMRTS is nonzero all two axis machines will use default damper winding data from the case card, even if data for damper windings is present on the machine data card.

1-20A

DMPMLT--DAMPING FACTOR MULTIPLIER

The machine model in the program includes a constant 'D' referred to as the damping torque coefficient and entered in units of %load deviation/%frequency deviation. This D factor is included in the machine swing equation:

$$2.*H*dwr/dt + Dt*wr = Pm - Pe$$

and represents damping not modelled elsewhere in the program. For example torque damping in the turbine model or damping produced by load-frequency characteristics could be included using this factor. All D constants are multiplied by the parameter DMPMLT automatically. Thus, if the user wishes to increase all machine D factors, DMPMLT should be increased above the default value of 1.0. If the user wishes to decrease all machine D factors, DMPMLT should be decreased below the default value.

MFDEP--FREQUENCY DEPENDENCE

The program allows the user to choose what type of frequency dependence will be modelled in the stator and swing equations.

The stator voltage equations are:

$$Vq = (wr/wo)*Eq" - (wr/wo)*Xd"*Id - Ra*Iq$$

$$Vd = (wr/wo)*Ed" + (wr/wo)*Xq"*Iq - Ra*Id$$

where wr = rotor angular frequency wo = base angular frequency

The swing equation is:

$$2.*H*dwr/dt + Dt*wr = Tm - Te \quad \text{where } Tm = Pmech/wr \quad Te = Pelec/wr$$

The default value of MFDEP = 0 causes the program to ignore the speed effects in both equations and assumes wr = wo = 1.0 pu.

$$Vq = Eq" - Xd"*Id - Ra*Iq$$

$$Vd = Ed" + Xq"*Iq - Ra*Id$$

$$2.*H*dwr/dt + Dt*wr = Pm - Pe$$

If MFDEP = 1, then speed effects are represented in both stator voltage and swing equations:

$$Vq = (wr/wo)*Eq" - (wr/wo)*Xd"*Id - Ra*Iq$$

$$Vd = (wr/wo)*Ed: + (wr/wo)*Xq"*Iq - Ra*Id$$

$$2.*H*dwr/dt + Dt*wr = Tm - Te$$

If MFDEP = 2, stator voltage equations include speed effects but not the swing equations:

Vq = (wr/wo)*Eq" - (wr/wo)*Xd"*Id - Ra*Iq

Vd = (wr/wo)*Ed" + (wr/wo)*Xq"*Iq - Ra*Id

2.*H*dwr/dt + Dt*wr = Pm - Pe

If MFDEP = 3, speed effects are included in the swing equations but not in the stator voltage equations:

Vq = Eq" - Xd"*Id - Ra*Iq

Vd = Ed" + Xq"*Iq - Ra*Id

2.*H*dwr/dt + Dt*wr = Tm - Te

If MFDEP = 4,speed effects are included only for the mechanical torque in the swing equations:

Vq = Eq" - Xd"*Id - Ra*Iq

Vd = Ed" + Xq"*Iq - Ra*Id

2.*H*dwr/dt + Dt*wr = Tm - Pe

FRQBSE

FRQBSE is the base frequency of the network in Hertz. The program uses cycles as the internal time base where:

one cycle = 1.0/FRQBSE seconds

Default value of FRQBSE is 60. Hertz.

LOVTEX

If LOVTEX = 0 after 30 cycles of simulation have been completed the program will check the voltage magnitude of all buses. If any voltage is less than 0.4 per unit, the program will stop after another 30 cycles. If LOVTEX is nonzero, no low voltage check will be made.

TOLERANCES USED IN THE TRANSIENT STABILITY PROGRAM

ANGDIF — Absolute difference between generator angle at the present iteration and the previous iteration. It is calculated in subroutine CNTRL.

ANGDIM — Largest ANGDIF in the study.(CNTRL)

IGMX — Generator number for the machine having the largest ANGDIF.(CNTRL)

DELANG — Tolerance or maximum value for ANGDIF. DELANG is read off the FF card in INPUT1.

Although ANGDIF is still calculated in the program, it is not used as a verification of convergence.

DCREP — Absolute difference between generator accelerating power at the present iteration and the previous iteration. It is calculated in subroutine CNTRL.

ACPERR — The sum of all DCREP's in the study.(CNTRL)

DCREPM — Maximum DCREP in the study.(CNTRL)

IMX — Generator number for machine having largest DCREP.(CNTRL)

SUMCR — Absolute value of bus current injection. Calculated in subroutine DERIV.

CDEL — Difference between absolute value of bus current injection at the present iteration and the previous iteration.

DELCR — Array containing SUMCR for each bus.(DERIV)

DSUM — Sum of all CDEL's.(DERIV)

CMAX — Maximum CDEL in the study.(DERIV)

IMAX — Bus number for bus having CMAX.(DERIV)

TOLI — Tolerance or maximum value for both DCREPM and CMAX. TOLI is read off the FF card in INPUT1. Convergence requires both CMAX and DCREPM to be less than TOLI.

ITOL — = 1 if all tolerances are satisfied
= 2 if all tolerances are not satisifed

ILIM — Maximum number of network-differential equation iterations allowed for one time step. ILIM is read off the FF card in INPUT1.

LSOLQT — If LSOLQT = 1 the program will stop if a time step takes ILIM iterations without convergence. If LSOLQT = 0, the program will continue to the next time step if convergence is not reached. LSOLQT is read off the FF card in INPUT1.

MACHINE REPRESENTATION

The following machine models are available in the BPA program:

Induction machine—use an MI card

Classical synchronous machine--use an MC card

Two Axis (d and q) synchronous machine--use an MF card

(a) if Tdo" = 0.0 on the M card and no default subtransient data is entered on the CASE card, then only transient behaviour is modelled (coils f and g are represented).

(b) if Tdo" is not equal to 0.0 or default subtransient data is entered, both transient and subtransient behaviour is modelled (coils f, kd, g, kq).

(c) if Tdo' = 999. the machine will be modelled with constant flux linkage.

(d) if Tdo' is greater than 0.0 but not equal to 999. and no exciter model is present, the machine will be modelled with constant field voltage.

(e) if Tdo' is greater than 0.0 but not equal to 999. and an exciter model is present, the machine will be modelled with variable field voltage.

Infinite bus--use an MC card with Emws = 999999.

Inertialess Machine--use an MS card with Emws = 0.0

TRR 9/30/86

U. S. DEPARTMENT OF THE INTERIOR – BONNEVILLE POWER ADMINISTRATION

BPA STABILITY PROGRAM
WSCC INPUT FORMAT MACHINE DATA
GENERAL

CHG CODE

BLANK = ADD NEW MACHINE
D = DELETE MACHINE
M = CHANGE DATA ENTERED ONLY

TYPE

HY = HYDRO
ST = STEAM
NU = NUCLEAR

SHEET _____ OF _____
CODE _____
DATE _____

M	SUB TYPE	CHG CODE	NAME	KV	ID	MVA RATING	PF	NO. UNITS THIS CARD	TYPE	OWNER	X_d''	X_q''	T_{do}''	T_{qo}''
1	2	3	4–11	12–15	16	17–21	22–25	26–29	30–32	33–36	37–42	43–47	48–51	52–55
M														
M														
M													

Requested by _____ Ext No. _____ Job code _____

BONNEVILLE POWER ADMINISTRATION
FORTRAN CODING FORM

Project _____ Sheet ____ of ____

Statement No. | CONT | Identification

GENERALIZED DAMPER WINDING DATA

| | | |

U. S. DEPARTMENT OF THE INTERIOR – BONNEVILLE POWER ADMINISTRATION

BPA STABILITY PROGRAM
WSCC INPUT FORMAT MACHINE DATA

CHG CODE

BLANK = ADD NEW MACHINE
D = DELETE MACHINE
M = CHANGE DATA
ENTERED ONLY

SHEET _____ OF _____

CODE _____

DATE _____

M	SUB TYPE	CHG CODE	NAME	KV	ID	E_{MWS}	P (p.u.)	Q (p.u.)	MVA BASE	R_A	X'_d	X'_q	X_d	X_q	T'_{do}	T'_{qo}	X_L X_P	$S_{G1.0}$	$S_{G1.2}$	D
1	2	3	4-15	12-15	16	17-22	23-25	26-28	29-32	33-36	37-41	42-46	47-51	52-56	57-60	61-63	64-68	69-73	74-77	78-80
M																				
M																				
M																			

EQUATIONS

$V_q = E'_q - I_d X'_d$

$V_d = E'_d + I_q X'_d$

E'_q = CONSTANT

$$M \frac{d^2\delta}{dt^2} + D \frac{d\delta}{dt} = T_M \omega_o - P_E$$

INPUT DATA

1. SPECIFY: E_{MWS}, P, Q, MVA BASE, X'_d, D

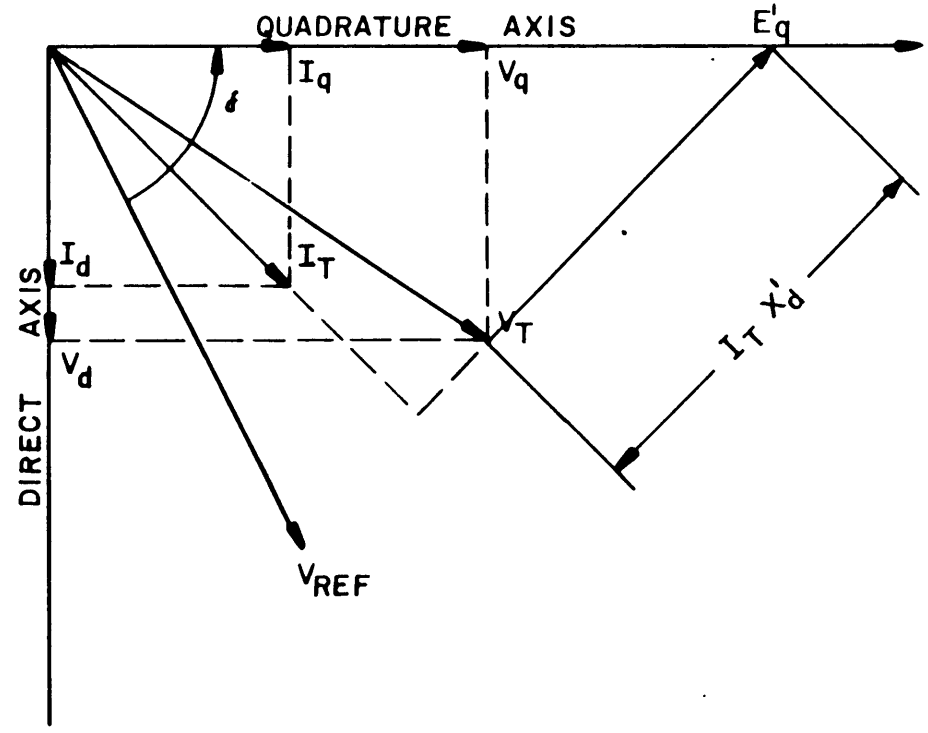

WSCC STABILITY PROGRAM GENERATOR MODELS	
WSCC TYPE C	FIGURE 1
	JANUARY 16,1985
CLASSICAL REPRESENTATION	

2-2.1

WSCC STABILITY PROGRAM
INPUT FORMAT
MACHINE DATA
INDUCTION MOTOR

ORGANIZATION _____
PROJECT _____
SHEET ___ OF ___ DATE _____

COMMENTS	M	TYPE	NAME	KV	ID	E_{MWS}	P (p.u.)		MVA BASE	R_S	X_S	X_M	R_R	X_R	V_I	T_I	A	B	
	1	2	3–10	11–14	15	16–21	22–25	26–28	29–32	33–36	37–40	41–44	45–48	49–52	53–56	57–60	61–64	65–68	69–80
	M	I																	

REVISED 5 - 5 - 75

2-3

WSCC STABILITY PROGRAM

INDUCTION MOTOR

COLUMN	
1	Card Type - M
2	Machine Type - I
3	Blank
4-15	Bus Name
16	Machine Identification (alphanumeric)
17-22	E_{MWS} - Kenetic Energy at Sixty Cycles per Second in Megawatt Seconds
23-25	Per Unit of Load Megawatts on this Bus to be assigned to this Machine
26-28	Blank
29-32	Base Power in MVA for Machine Impedances Blank 100 MVA is Assumed
33-37	R_S - Stator Resistance in per Unit
38-42	X_S - Stator Reactance in per Unit
43-47	X_M - Magnetizing Reactance in per Unit
48-52	R_R - Rotor Resistance in per Unit
53-57	X_R - Rotor Reactance in per Unit
58-60	V_I - Per Unit Voltage for dropping the Induction Motor. If the terminal voltage of the induction motor drops below V_I, the induction motor will be dropped after a time delay of T_I.
61-64	T_I - Time Delay for Dropping Induction Motor in Seconds
65-69	A - Constant of the Mechanical Load Speed-Torque Equation
70-74	B - Constant of the Mechanical Load Speed-Torque Equation
75-80	Blank

Revised 12/20/74

WSCC STABILITY PROGRAM

INDUCTION MOTOR MODEL

a) Steady-State Equivalent Circuit of the Induction Motor Model

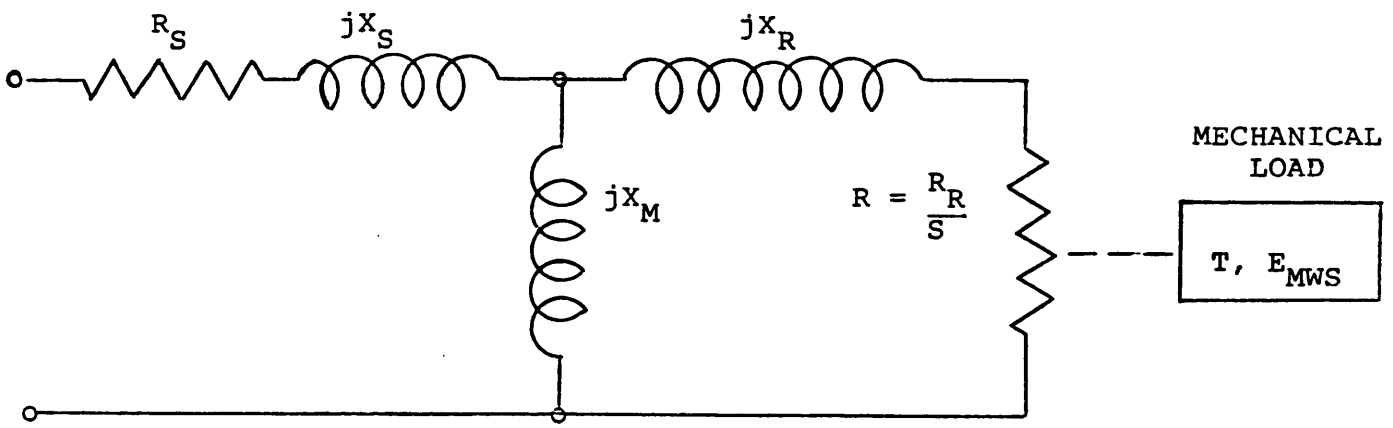

Mechanical Load Torque, $T = (A\ W^2 + B\ W + C)T_o$

where C is calculated by the program such that

$$AW_o^2 + BW_o + C = 1.0$$

$$W = 1-S$$

b) Description of Induction Motor Initialization

The initial power absorbed by the induction motor is equal to the total power on the induction motor bus multiplied by the per unit multiplier specified in columns 23-25 of the induction motor data card. Using the terminal voltage from the power flow and the reactances specified on the induction motor data card, the initial slip of the induction motor is calculated. A fatal error diagnostic will be printed if the initial slip is not within the range of .01 to .05 per unit.

The megavars absorbed by the induction motor are then calculated. If the power factor of the induction motor is outside the range of .7 to .9 per unit, a fatal error diagnostic will be printed.

The megavars absorbed by the induction motor are netted from the total load on the bus. Any megavar load which remains on the bus after netting is represented as regular load on the bus. Note that the user must specify load characteristics for this remaining load.

Revised 5-1-75

2-5

WSCC STABILITY PROGRAM

INDUCTION MOTOR NOMENCLATURE

SYMBOL	DEFINITION
A	Coefficient in the Mechanical Load Speed-torque equation.
B	Coefficient in the Mechanical Load Speed-torque equation.
C	Coefficient in the Mechanical Load Speed-torque equation.
E_{MWS}	Kinetic energy at sixty cycles per second in megawatt seconds.
P_o	Initial electrical power absorbed by the induction motor in per unit.
R_R	Rotor resistance in per unit.
R_S	Stator resistance in per unit.
S	Slip in per unit.
T	Mechanical torque in per unit.
T_I	Time delay for dropping the induction motor on low voltage.
V_I	Per unit voltage below which the induction motor will be dropped.
W	Induction motor velocity in per unit.
W_o	Initial velocity of induction motor in per unit.
X_M	Magnetizing reactance in per unit.
X_R	Rotor reactance in per unit.
X_S	Stator reactance in per unit.

Revised 5-1-75

INDUCTION MOTOR INITIALIZATION*

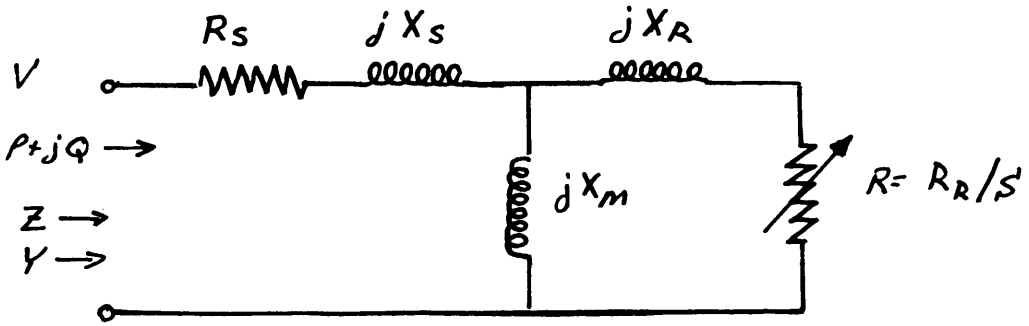

EQUIVALENT CIRCUIT FOR INDUCTION MOTOR

GIVEN: $V, P, R_S, X_S, X_m, X_R, R_R$

DETERMINE: S AND Q $\qquad S$ = SLIP

SOLUTION: LET $X_{RM} = X_R + X_m$

$$X_{SM} = X_S + X_m$$

$$X_P = X_S X_R + X_S X_m + X_m X_R$$

$$Z = R_S + jX_S + \frac{(jX_m)(R + jX_R)}{R + jX_{RM}} = 1/Y$$

$$P + jQ = \hat{V}\hat{I}^* = V^2 Y^*$$

$$\text{REAL } Y^* = P/V^2$$

$$Y = \frac{R + jX_{RM}}{R_S R - X_P + j(R_S X_{RM} + R X_{SM})}$$

$$Y = \frac{R_S R^2 + X_m^2 R + R_S X_{RM}^2 - j(X_{SM} R^2 + X_P X_{RM})}{A' R^2 + B' R + C'}$$

WHERE: $A' = R_S^2 + X_{SM}^2$

$$B' = 2R_S X_m^2$$

$$C' = X_P^2 + R_S^2 X_{RM}^2$$

* FROM KEN BESS WSCC TECHNICAL STAFF

LET $A = A'P/V^2 - R_S$

$B = B'P/V^2 - X_M^2$

$C = C'P/V^2 - R_S X_{RM}$

THEN $R = \dfrac{-B + \sqrt{B^2 - 4AC}}{2A}$

AND $S = R_R / R$

THE FOLLOWING CHECKS ARE MADE TO ASSURE THAT THE VALUE FOR SLIP IS REALISTIC:

$A > 0 \quad B < 0 \quad B^2 - 4AC > 0$

$0.01 \leq S \leq 0.05$

$Q = \text{IMAG } V^2 Y^*$

$$Q = \frac{(V^2)(X_{SM} R^2 + X_P X_{RM})}{A'R^2 + B'R + C'}$$

POWER FACTOR $= \cos[\tan^{-1} Q/P]$

THE FOLLOWING DATA CHECK IS MADE TO ASSURE A REALISTIC POWER FACTOR:

$0.7 < \text{POWER FACTOR} < 0.9$

EXAMPLE:

GIVEN: $V = 1.0064$, $P = 0.40$, $R_S = 0.032$, $X_S = 0.443$

$X_M = 20.15$, $X_R = 0.375$, $R_R = 0.034$

$X_{RM} = 20.525$

$X_{SM} = 20.573$

$X_P = 16.6488$

$A' = 424.073$

$B' = 25.9854$

$C' = 277.615$

$A = 167.446$

$B = -395.760$

$C = 96.1572$

$R = 2.08855$

$S = 0.034/R = 0.01628$

$Q = 0.2003$

EXCITATION SYSTEMS NOMENCLATURE

SYMBOL	DEFINITION
E_{FD}	Exciter Output Voltage (Applied to Generator Field)
E_{FDMAX}	Maximum Field Voltage
E_{FDMIN}	Minimum Field Voltage
I_{FD}	Generator Field Current
I_T	Generator Terminal Current
K_A	Regulator Gain
K'_A	Regulator Gain (Type E Excitation System)
K_E	Exciter Constant Related to Self-Excited Field
K_F	Regulator Stabilizing Circuit Gain
K_I	Current Circuit Gain (Type D Excitation System)
K_P	Potential Circuit Gain (Type D Excitation System)
K_V	Fast Raise/Lower Contact Setting (Type E Excitation System)
S_E	Exciter Saturation Function
S_{EMAX}	Exciter Saturation at Maximum Field Voltage
$S_{E.75MAX}$	Exciter Saturation at 75% of Maximum Field Voltage
T_A	Regulator Amplifier Time Constant
T_{A1}	Regulator Amplifier Time Constant
T_E	Exciter Time Constant
T_F	Regulator Stabilizing Circuit Time Constant
T_{F1}	Regulator Stabilizing Circuit Time Constant
T_{RH}	Rheostat Time Constant (Type E Excitation System)
V_B	Input to Exciter (Type D Excitation System)
V_{BMAX}	Maximum Value of V_B
V_R	Regulator Output Voltage
V_{RMAX}	Maximum Value of V_R
V_{RMIN}	Minimum Value of V_R
$V_{RMIN\ MULT}$	Multiplier of V_{RMAX} to obtain V_{RMIN}
V_{REF}	Regulator Reference Voltage Setting
V_{RH}	Field Rheostat Position
V_T	Generator Terminal Voltage
V_{THEV}	Voltage obtained from the Potential and Current Signals (Type D Excitation System)
ΔV_T	Generator Terminal Voltage Error Signal
V_{SO}	Power System Stabilizer Output
V_{TO}	Initial Generator Terminal Voltage
X_L	Commutating Reactance for SCPT System (Type D Excitation System)
V'_T	Generator Terminal Voltage if Unit does not have a Cross-Compound Governor. Compensated Terminal Voltage if Unit has a Cross-Compound Governor where $V'_T = V_T - (.05\ I_T)$ (Sin Ø) where Ø is the power factor angle and is positive for lagging current.
V'_{TO}	Initial Generator Terminal Voltage or Initial Compensated Generator Terminal Voltage. See definition of V'_T.
T_R	Regulator Input Filter Time Constant

BPA STABILITY PROGRAM
WSCC INPUT FORMAT EXCITER DATA

SHEET _____ OF _____

CODE _____

DATE _____

CHG. CODE

(BLANK) = ADD NEW EXCITER
D = DELETE EXCITER
M = CHANGE DATA ENTERED ONLY

*Use Parameter only as indicated for D, E or H type Exciter

ϕ Applies for type D,H, or J Exciter

K_E = 1.0 for separate Exciter

K_E = .0 for self Excitation

E	SUB TYPE	CHG CODE	NAME	KV	ID	T_R	K_A K_V (E)*	T_A T_{RH} (E)*	T_{A1}	V_R MIN MULT V_R MIN (ϕ)*	K_E K_{E1} (H)*	T_E	$S_{E.75M}$ K_I (D)*	S_E MAX K_p (D)*	EFD_{MIN}	EFD_{MAX} VB_{MAX} (D)*	K_F	T_F	K_{F1} X_L (D)*	T_{F1}
1	2	3	4-11	12-15	16	17-20	21-25	26-29	30-33	34-37	38-41	42-45	46-49	50-53	54-58	59-62	63-66	67-70	71-75	76-80
E	A																			

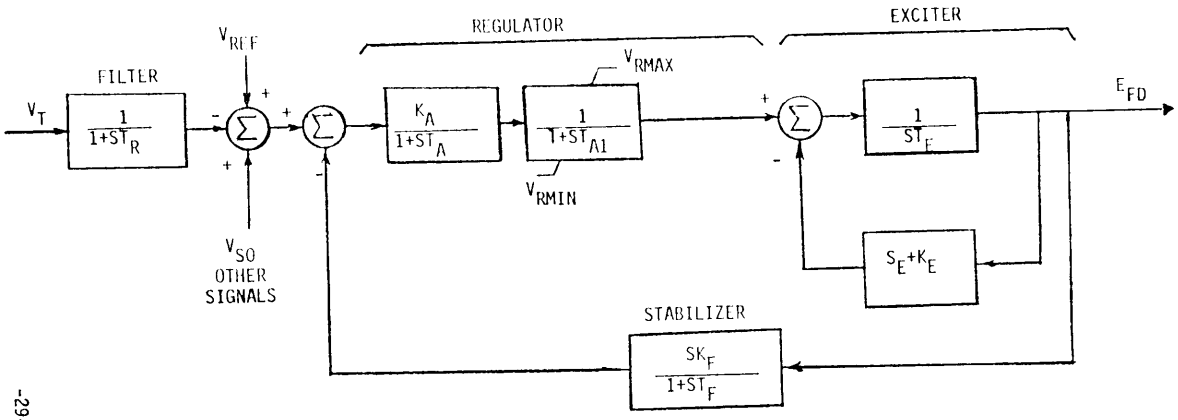

INPUT DATA

1. Specify: T_R, K_A, T_A, T_{A1}, $V_{RMIN\ MULT}$ = -1.0, $S_{E.75MAX}$, S_{EMAX}, E_{FDMAX}, K_F, T_F, K_E, and T_E.
2. $V_{RMAX} = (S_{EMAX} + K_E)\ (E_{FDMAX})$
   $V_{RMIN} = (V_{RMAX})\ (V_{RMIN\ MULT})$
3. K_E=1 for a system with separate excitation. K_E=0 for a system which is self-excited (the program will calculate K_E for this case).
4. The magnitude of per unit terminal voltage is used as input to the regulator filter.
5. The field voltage output is in per unit where one per unit field voltage is that required to give one per unit terminal voltage on the generator air-gap line.

REPRESENTATIVE SYSTEMS

1. T_R=0: GE- NA143, NA108. Westinghouse-Magastat WMA. AC-Regulux
2. $T_R \neq 0$: GE-NA101. Westinghouse-Rototrol Silverstat, TRA.

WSCC STABILITY PROGRAM EXCITATION SYSTEM MODELS	
W S C C T Y P E A	FIGURE AUGUST 17
CONTINUOUSLY ACTING DC ROTATING EXCITATION SYSTEM	

COLUMN	
1	Card Type - E
2	Card Sub-Type (A, B, C, D, E, F, G, J or K)
3	Blank
4-15	Bus Name, Bus Base kV in Columns 12-15
16	Machine Identification (alphanumeric)
17-20	T_R - Regulator Input Filter Time Constant
21-25	K_A - Regulator Gain K_V - Fast Raise/Lower Contact Setting (Type E Excitation System)
26-29	T_A - Regulator Amplifier Time Constant T_{RH} - Rheostat Time Constant (Type E Excitation System)
30-33	T_{A1} - Regulator Amplifier Time Constant
34-37	$V_{R\ MIN\ MULT}$ - Multiplier of $V_{R\ MAX}$ to determine $V_{R\ MIN}$, except for Sub-Type D or J use actual $V_{R\ MIN}$ value.
38-41	K_E - Exciter Constant Related to Self-Excited Field K_E = 1.0 for separate excitation; K_E = 0.0 for self-excitation
42-45	T_E - Exciter Time Constant
46-49	$S_{E\ .75\ MAX}$ - Exciter Saturation at 75% of Maximum Field Voltage K_I - Current Circuit Gain (Type D Excitation System)
50-53	$S_{E\ MAX}$ - Exciter Saturation at Maximum Field Voltage K_P - Potential Circuit Gain (Type D Excitation System)
54-58	$E_{FD\ MIN}$ - Minimum Field Voltage
59-62	$E_{FD\ MAX}$ - Maximum Field Voltage $V_{B\ MAX}$ - Maximum Exciter Voltage (Type D Excitation System)
63-66	K_F - Regulator Stabilizing Circuit Gain
67-70	T_F - Regulator Stabilizing Circuit Time Constant
71-75	X_L - Commutating Reactance (Type D Excitation System)
76-80	T_{F1} - Regulator Stabilizing Circuit Time Constant (Type B Excitation System)

3-2

BPA STABILITY PROGRAM
WSCC INPUT FORMAT EXCITER DATA

SHEET _____ OF _____

CODE _____

DATE _____

CHG. CODE

(BLANK) = ADD NEW EXCITER
D = DELETE EXCITER
M = CHANGE DATA ENTERED ONLY

*Use Parameter only as indicated for D, E or H type Exciter

ϕ Applies for type D,H, or J Exciter

K_E = 1.0 for separate Exciter

K_E = .0 for self Excitation

E	SUB TYPE	CHG CODE	NAME	KV	ID	T_R	K_A K_V (E)*	T_A T_{RH} (E)*	T_{A1}	V_R MIN MULT V_R MIN (ϕ)*	K_E K_{E1} (H)*	T_E	$S_{E.75M}$ K_I (D)*	S_E MAX K_P (D)*	EFD_{MIN}	EFD_{MAX} VB_{MAX} (D)*	K_F	T_F	K_{F1} X_L (D)*	T_{F1}
1	2	3	4-11	12-15	16	17-20	21-25	26-29	30-33	34-37	38-41	42-45	46-49	50-53	54-58	59-62	63-66	67-70	71-75	76-80
E	B																			

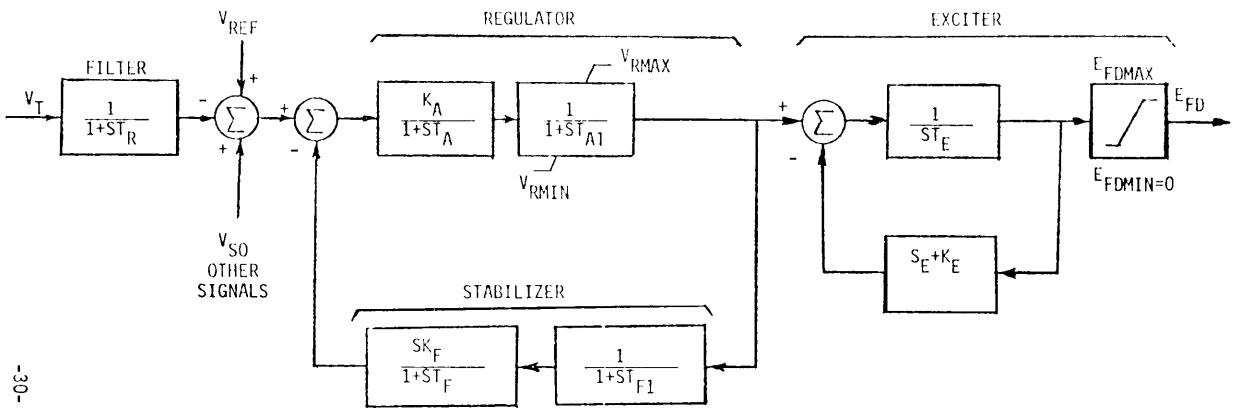

INPUT DATA

1. Specify: T_R, K_A, T_A, T_{A1}, $V_{RMIN\ MULT}$, K_E = 1.0, T_E, $S_{E.75MAX}$, S_{EMAX}, E_{FDMIN} = 0, E_{FDMAX}, K_F, T_F, T_{F1}
2. $V_{RMAX} = (S_{EMAX} + K_E)\ (E_{FDMAX})$
   $V_{RMIN} = (V_{RMAX})(V_{RMIN\ MULT})$
3. The magnitude of per unit terminal voltage is used as input to the regulator filter.
4. The field voltage output is in per unit where one per unit field voltage is that required to give one per unit terminal voltage on the generator air-gap line.

WSCC STABILITY PROGRAM EXCITATION SYSTEM MODELS	
W S C C T Y P E B	FIGURE 2
	AUGUST 17, 1973
WESTINGHOUSE PRE-1967 BRUSHLESS	

COLUMN	
1	Card Type - E
2	Card Sub-Type (A, B, C, D, E, F, G, J or K)
3	Blank
4-15	Bus Name, Bus Base kV in Columns 12-15
16	Machine Identification (alphanumeric)
17-20	T_R - Regulator Input Filter Time Constant
21-25	K_A - Regulator Gain K_V - Fast Raise/Lower Contact Setting (Type E Excitation System)
26-29	T_A - Regulator Amplifier Time Constant T_{RH} - Rheostat Time Constant (Type E Excitation System)
30-33	T_{A1} - Regulator Amplifier Time Constant
34-37	$V_{R\ MIN\ MULT}$ - Multiplier of $V_{R\ MAX}$ to determine $V_{R\ MIN}$, except for Sub-Type D or J use actual $V_{R\ MIN}$ value.
38-41	K_E - Exciter Constant Related to Self-Excited Field K_E = 1.0 for separate excitation; K_E = 0.0 for self-excitation
42-45	T_E - Exciter Time Constant
46-49	$S_{E\ .75\ MAX}$ - Exciter Saturation at 75% of Maximum Field Voltage K_I - Current Circuit Gain (Type D Excitation System)
50-53	$S_{E\ MAX}$ - Exciter Saturation at Maximum Field Voltage K_P - Potential Circuit Gain (Type D Excitation System)
54-58	$E_{FD\ MIN}$ - Minimum Field Voltage
59-62	$E_{FD\ MAX}$ - Maximum Field Voltage $V_{B.MAX}$ - Maximum Exciter Voltage (Type D Excitation System)
63-66	K_F - Regulator Stabilizing Circuit Gain
67-70	T_F - Regulator Stabilizing Circuit Time Constant
71-75	X_L - Commutating Reactance (Type D Excitation System)
76-80	T_{F1} - Regulator Stabilizing Circuit Time Constant (Type B Excitation System)

3-3

INTERIOR – BONNEVILLE POWER ADMINISTRATION – PORTLAND, OREGON

BPA 707 Oct. 1973

BPA STABILITY PROGRAM
WSCC INPUT FORMAT EXCITER DATA

SHEET _____ OF _____

CODE _____

DATE _____

CHG. CODE

(BLANK) = ADD NEW EXCITER
D = DELETE EXCITER
M = CHANGE DATA ENTERED ONLY

*Use Parameter only as indicated for D, E or H type Exciter

ϕ Applies for type D,H, or J Exciter

K_E = 1.0 for separate Exciter

K_E = .0 for self Excitation

E	SUB TYPE	CHG CODE	NAME	KV	ID	T_R	K_A K_V (E)*	T_A T_{RH} (E)*	T_{A1}	V_R MIN MULT V_R MIN (ϕ)*	K_E K_{E1} (H)*	T_E	$S_{E.75M}$ K_I (D)*	S_E MAX K_p (D)*	EFD_{MIN}	EFD_{MAX} VB_{MAX} (D)*	K_F	T_F	K_{F1} X_L (D)*	T_{F1}
1	2	3	4-11	12-15	16	17-20	21-25	26-29	30-33	34-37	38-41	42-45	46-49	50-53	54-58	59-62	63-66	67-70	71-75	76-80
E	C																			
E																				
E																				
E

U. S. DEPARTMENT OF THE INTERIOR – BONNEVILLE POWER ADMINISTRATION

BPA STABILITY PROGRAM
WSCC INPUT FORMAT EXCITER DATA

SHEET _____ OF _____

CODE _____

DATE _____

CHG. CODE

(BLANK) = ADD NEW EXCITER
D = DELETE EXCITER
M = CHANGE DATA ENTERED ONLY

*Use Parameter only as indicated for D, E or H type Exciter

ϕ Applies for type D,H, or J Exciter

K_E = 1.0 for separate Exciter

K_E = .0 for self Excitation

E	SUB TYPE	CHG CODE	NAME	KV	ID	T_R	K_A K_V (E)*	T_A T_{RH} (E)*	T_{A1}	V_R MIN MULT V_R MIN (ϕ)*	K_E K_{E1} (H)*	T_E	$S_{E.75M}$ K_I (D)*	S_E MAX K_p (D)*	EFD_{MIN}	EFD_{MAX} VB_{MAX} (D)*	K_F	T_F	K_{F1} X_L (D)*	T_{F1}
1	2	3	4-11	12-15	16	17-20	21-25	26-29	30-33	34-37	38-41	42-45	46-49	50-53	54-58	59-62	63-66	67-70	71-75	76-80
E	D																			

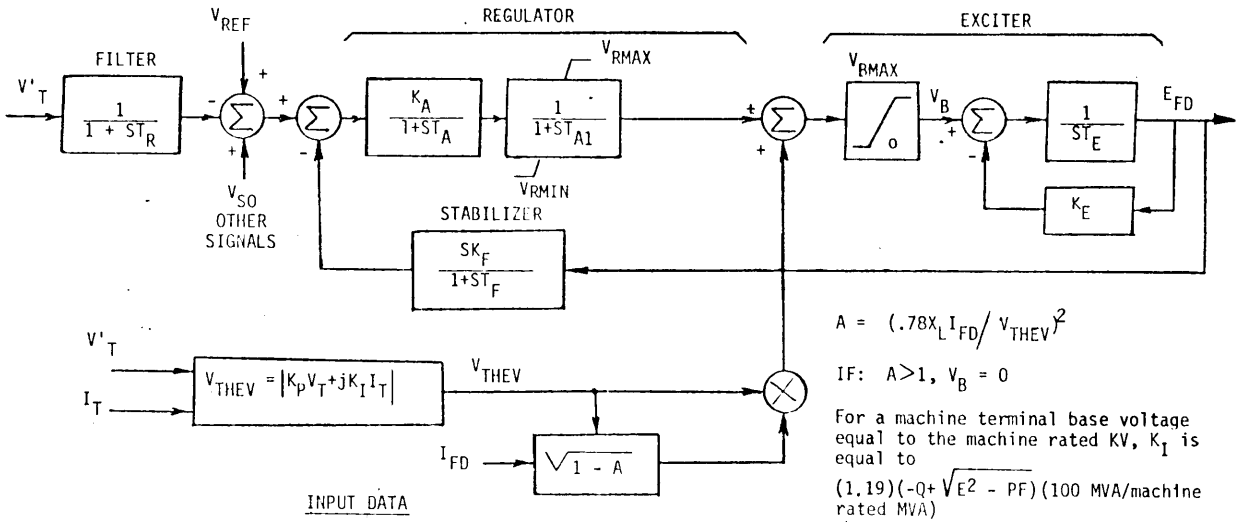

$A = (.78X_L I_{FD} / V_{THEV})^2$

IF: $A > 1$, $V_B = 0$

For a machine terminal base voltage equal to the machine rated KV, K_I is equal to

$(1.19)(-Q + \sqrt{E^2 - PF})$ (100 MVA/machine rated MVA)

where
PF = Machine rated power factor
E = Rated load field voltage in per unit
Q = Sin (Inverse Cos PF)

INPUT DATA

1. Specify: T_R, K_A, T_A, T_{A1}, V_{RMIN}, K_E=1, T_E, K_p, V_{BMAX}, K_F, T_F, X_L, K_I.
2. $V_{RMAX} = -V_{RMIN}$.
3. Vector values of terminal current and voltage in per unit on a 100 MVA base are used to calculate V_{THEV}:
4. The magnitude of per unit terminal voltage is used as input to the regulator filter.
5. The field voltage output is in per unit where one per unit field voltage is that required to give one per unit terminal voltage on the generator air-gap line.

WSCC STABILITY PROGRAM EXCITATION SYSTEM MODELS	
W S C C T Y P E D	FIGURE 4
	December 17, 1974
SCPT SYSTEM	

COLUMN

1	Card Type - E
2	Exciter Type (A,B,C,D,E,F,G,J, or K)
3	Blank
4-15	Bus Name
16	Machine Identification (alphanumeric)
17-20	T_R - Regulator Input Filer Time Constant
21-25	K_A - Regulator Gain
	K_V - Fast Raise/Lower Contact Setting (Type E Excitation System)
26-29	T_A - Regulator Amplifier Time Constant
	T_{RH} - Rheostat Time Constant (Type E Excitation System)
30-33	T_{A1} - Regulator Amplifier Time Constant
34-37	$V_{R\ MIN\ MULT}$ - Multiplier of $V_{R\ MAX}$ to determine $V_{R\ MIN}$
	$V_{R\ MIN}$ - Minimum regulator voltage (Types D & J Excitation System)
38-41	K_E - Exciter Constant Related to Self-Excited Field
	K_E = 1.0 for separate excitation; K_E = 0.0 for self-excitation
42-45	T_E - Exciter Time Constant
46-49	$S_{E\ .75\ MAX}$ - Exciter Saturation at 75% of Maximum Field Voltage
	K_I - Current Circuit Gain (Type D Excitation System)
50-53	$S_{E\ MAX}$ - Exciter Saturation at Maximum Field Voltage
	K_p - Potential Circuit Gain (Type D Excitation System)
54-58	$E_{FD\ MIN}$ - Minimum Field Voltage
59-62	$E_{FD\ MAX}$ - Maximum Field Voltage
	$V_{B\ MAX}$ - Maximum Exciter Voltage (Type D Excitation System)
63-66	K_F - Regulator Stabilizing Circuit Gain
	K'_A - Regulator Gain (Type E Excitation System)
67-70	T_F - Regulator Stabilizing Circuit Time Constant
71-75	X_L - Commutating Reactance (Type D Excitation System)
76-80	T_{F1} - Regulator Stabilizing Circuit Time Constant (Type B Excitation System)

BPA STABILITY PROGRAM
WSCC INPUT FORMAT EXCITER DATA

SHEET _____ OF _____

CODE _____

DATE _____

CHG. CODE

(BLANK) = ADD NEW EXCITER
D = DELETE EXCITER
M = CHANGE DATA ENTERED ONLY

*Use Parameter only as indicated for D, E or H type Exciter

ϕ Applies for type D,H, or J Exciter

K_E = 1.0 for separate Exciter

K_E = .0 for self Excitation

E	SUB TYPE	CHG CODE	NAME	KV	ID	T_R	K_A K_V (E)*	T_A T_{RH} (E)*	T_{A1}	V_R MIN MULT V_R MIN (ϕ)*	K_E K_{E1} (H)*	T_E	$S_{E.75M}$ K_I (D)*	S_E MAX K_p (D)*	EFD_{MIN}	EFD_{MAX} VB_{MAX} (D)*	K_F K'_A(E)	T_F	K_{F1} X_L (D)*	T_{F1}
1	2	3	4-11	12-15	16	17-20	21-25	26-29	30-33	34-37	38-41	42-45	46-49	50-53	54-58	59-62	63-66	67-70	71-75	76-80
E	E																			

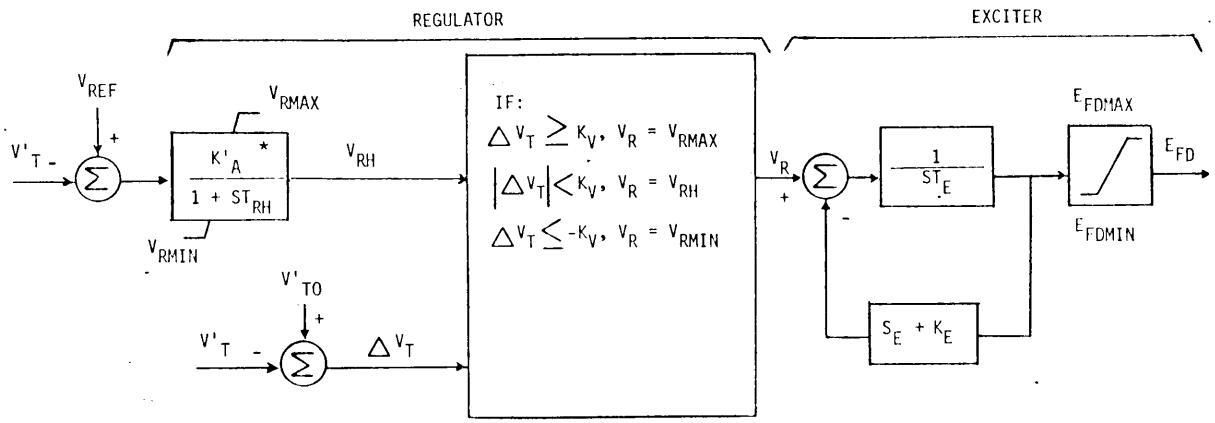

INPUT DATA

1. Specify: T_{RH}, K_V, $V_{RMIN\ MULT}$, K_E, T_E, $S_{E.75MAX}$, S_{EMAX}, E_{FDMIN}, E_{FDMAX}
2. $V_{RMAX} = (S_{EMAX} + K_E)\ (E_{FDMAX})$
3. $V_{RMIN} = (V_{RMAX})\ (V_{RMIN\ MULT})$
4. The magnitude of per unit terminal voltage is used as input to the excitation system.
5. The field voltage output is in per unit where one per unit field voltage is that required to give one per unit terminal voltage on the generator air-gap line.
6. If T_{RH} is greater than zero, K'_A must be greater than 10. If T_{RH} is equal to zero, K'_A must be less than 10.

REPRESENTATIVE SYSTEMS

GE - GFA4

WESTINGHOUSE - BJ30

* NOTE:
If the time constant T_{RH} is equal to zero, this block is represented as K'_A/S.

WSCC STABILITY PROGRAM EXCITATION SYSTEM MODELS	
WSCC TYPE E	FIGURE 5
	DEC. 17, 197
NON-CONTINUOUSLY ACTING RHEOSTATIC EXCITATION SYSTEM	

COLUMN

1	Card Type - E
2	Exciter Type (A,B,C,D,E,F,G,J, or K)
3	Blank
4-15	Bus Name
16	Machine Identification (alphanumeric)
17-20	T_R - Regulator Input Filer Time Constant
21-25	K_A - Regulator Gain
	K_V - Fast Raise/Lower Contact Setting (Type E Excitation System)
26-29	T_A - Regulator Amplifier Time Constant
	T_{RH} - Rheostat Time Constant (Type E Excitation System)
30-33	T_{A1} - Regulator Amplifier Time Constant
34-37	$V_{R\ MIN\ MULT}$ - Multiplier of $V_{R\ MAX}$ to determine $V_{R\ MIN}$
	$V_{R\ MIN}$ - Minimum regulator voltage (Types D & J Excitation System)
38-41	K_E - Exciter Constant Related to Self-Excited Field
	K_E = 1.0 for separate excitation; K_E = 0.0 for self-excitation
42-45	T_E - Exciter Time Constant
46-49	$S_{E\ .75\ MAX}$ - Exciter Saturation at 75% of Maximum Field Voltage
	K_I - Current Circuit Gain (Type D Excitation System)
50-53	$S_{E\ MAX}$ - Exciter Saturation at Maximum Field Voltage
	K_p - Potential Circuit Gain (Type D Excitation System)
54-58	$E_{FD\ MIN}$ - Minimum Field Voltage
59-62	$E_{FD\ MAX}$ - Maximum Field Voltage
	$V_{B\ MAX}$ - Maximum Exciter Voltage (Type D Excitation System)
63-66	K_F - Regulator Stabilizing Circuit Gain
	K'_A - Regulator Gain (Type E Excitation System)
67-70	T_F - Regulator Stabilizing Circuit Time Constant
71-75	X_L - Commutating Reactance (Type D Excitation System)
76-80	T_{F1} - Regulator Stabilizing Circuit Time Constant (Type B Excitation System)

BPA STABILITY PROGRAM
WSCC INPUT FORMAT EXCITER DATA

SHEET _____ OF _____

CODE _____

DATE _____

CHG. CODE

(BLANK) = ADD NEW EXCITER
D = DELETE EXCITER
M = CHANGE DATA ENTERED ONLY

*Use Parameter only as indicated for D, E or H type Exciter

ϕ Applies for type D,H, or J Exciter

K_E = 1.0 for separate Exciter

K_E = .0 for self Excitation

E	SUB TYPE	CHG CODE	NAME	KV	ID	T_R	K_A K_V (E)*	T_A T_{RH} (E)*	T_{A1}	V_R MIN MULT V_R MIN (ϕ)*	K_E K_{E1} (H)*	T_E	$S_{E.75M}$ K_I (D)*	S_E MAX K_p (D)*	EFD_{MIN}	EFD_{MAX} VB_{MAX} (D)*	K_F	T_F	K_{F1} X_L (D)*	T_{F1}
1	2	3	4-11	12-15	16	17-20	21-25	26-29	30-33	34-37	38-41	42-45	46-49	50-53	54-58	59-62	63-66	67-70	71-75	76-80
E	F																			

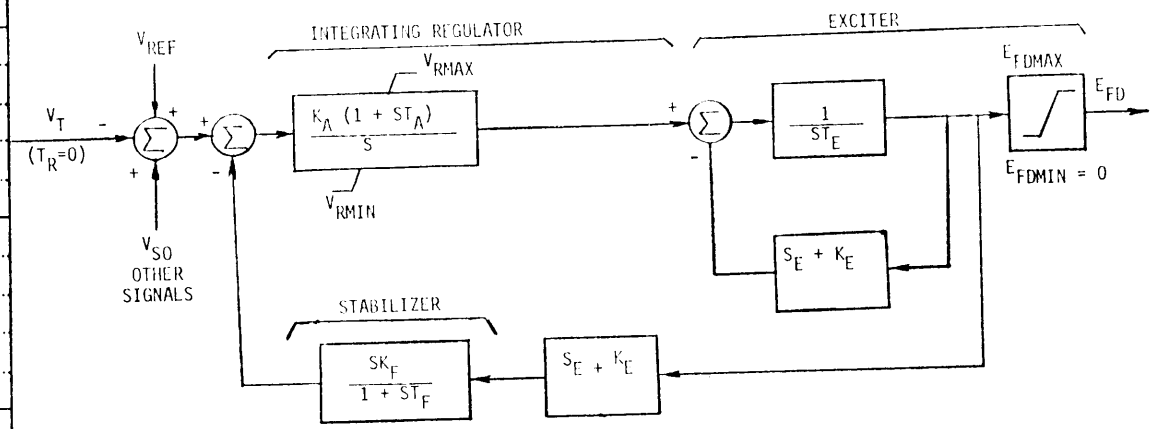

INPUT DATA

1. Specify: K_A, T_A, $V_{RMIN\ MULT}$, $K_E = 1$, T_E, $S_{E.75MAX}$, S_{EMAX}, $E_{FDMIN} = 0$, E_{FDMAX}, K_E, T_F
2. $V_{RMAX} = (S_{EMAX} + K_E)\ (E_{FDMAX})$
   $V_{RMIN} = (V_{RMAX})(V_{RMIN\ MULT})$
4. The magnitude of per unit terminal voltage is used as input to the excitation system.
5. The field voltage output is in per unit where one per unit field voltage is that required to give one per unit terminal voltage on the generator air-gap line.

WSCC STABILITY PROGRAM EXCITATION SYSTEM MODELS	
W S C C T Y P E F	FIGURE 6 AUGUST 17, 19
WESTINGHOUSE CONTINUOUS ACTING BRUSHLESS ROTATING ALTERNATOR EXCITATION SYSTEM	

COLUMN	
1	Card Type - E
2	Card Sub-Type (A, B, C, D, E, F, G, J or K)
3	Blank
4-15	Bus Name, Bus Base kV in Columns 12-15
16	Machine Identification (alphanumeric)
17-20	T_R - Regulator Input Filter Time Constant
21-25	K_A - Regulator Gain K_V - Fast Raise/Lower Contact Setting (Type E Excitation System)
26-29	T_A - Regulator Amplifier Time Constant T_{RH} - Rheostat Time Constant (Type E Excitation System)
30-33	T_{A1} - Regulator Amplifier Time Constant
34-37	$V_{R\ MIN\ MULT}$ - Multiplier of $V_{R\ MAX}$ to determine $V_{R\ MIN}$, except for Sub-Type D or J use actual $V_{R\ MIN}$ value.
38-41	K_E - Exciter Constant Related to Self-Excited Field K_E = 1.0 for separate excitation; K_E = 0.0 for self-excitation
42-45	T_E - Exciter Time Constant
46-49	$S_{E\ .75\ MAX}$ - Exciter Saturation at 75% of Maximum Field Voltage K_I - Current Circuit Gain (Type D Excitation System)
50-53	$S_{E\ MAX}$ - Exciter Saturation at Maximum Field Voltage K_P - Potential Circuit Gain (Type D Excitation System)
54-58	$E_{FD\ MIN}$ - Minimum Field Voltage
59-62	$E_{FD\ MAX}$ - Maximum Field Voltage $V_{B.MAX}$ - Maximum Exciter Voltage (Type D Excitation System)
63-66	K_F - Regulator Stabilizing Circuit Gain
67-70	T_F - Regulator Stabilizing Circuit Time Constant
71-75	X_L - Commutating Reactance (Type D Excitation System)
76-80	T_{F1} - Regulator Stabilizing Circuit Time Constant (Type B Excitation System)

INTERIOR—BONNEVILLE POWER ADMINISTRATION, PORTLAND, OREGON

BPA 707 Oct. 1972

BPA STABILITY PROGRAM
WSCC INPUT FORMAT EXCITER DATA

SHEET _____ OF _____

CODE _____

DATE _____

CHG. CODE

(BLANK) = ADD NEW EXCITER
D = DELETE EXCITER
M = CHANGE DATA ENTERED ONLY

*Use Parameter only as indicated for D, E or H type Exciter

ϕ Applies for type D,H, or J Exciter

K_E = 1.0 for separate Exciter

K_E = .0 for self Excitation

E	SUB TYPE	CHG CODE	NAME	KV	ID	T_R	K_A K_V (E)*	T_A T_{RH} (E)*	T_{A1}	V_R MIN MULT V_R MIN (ϕ)*	K_E K_{E1} (H)*	T_E	$S_{E.75M}$ K_I (D)*	S_E MAX K_p (D)*	EFD_{MIN}	EFD_{MAX} VB_{MAX} (D)*	K_F	T_F	K_{F1} X_L (D)*	T_{F1}
1	2	3	4-15	12-15	16	17-20	21-25	26-29	30-33	34-37	38-41	42-45	46-49	50-53	54-58	59-62	63-66	67-70	71-75	76-80
E	G																			

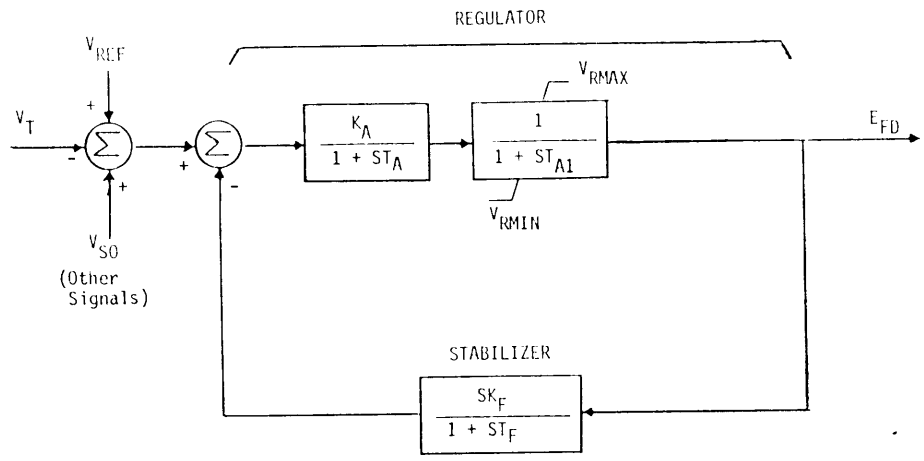

INPUT DATA

1. Specify: K_A, T_A, T_{A1}, K_F, T_F, E_{FDMIN}, E_{FDMAX}
2. The magnitude of per unit terminal voltage is used as input to the excitation system.
3. The field voltage output is in per unit where one per unit field voltage is that required to give one per unit terminal voltage on the generator air-gap line.
4. $V_{RMIN} = E_{FDMIN}$

   $V_{RMAX} = E_{FDMAX}$

WSCC STABILITY PROGRAM EXCITATION SYSTEM MODELS	
W S C C T Y P E G	FIGURE 7
	AUGUST 17,19
SCR EQUIVALENT EXCITATION SYSTEM	

COLUMN	
1	Card Type - E
2	Card Sub-Type (A, B, C, D, E, F, G, J or K)
3	Blank
4-15	Bus Name, Bus Base kV in Columns 12-15
16	Machine Identification (alphanumeric)
17-20	T_R - Regulator Input Filter Time Constant
21-25	K_A - Regulator Gain K_V - Fast Raise/Lower Contact Setting (Type E Excitation System)
26-29	T_A - Regulator Amplifier Time Constant T_{RH} - Rheostat Time Constant (Type E Excitation System)
30-33	T_{A1} - Regulator Amplifier Time Constant
34-37	$V_{R\ MIN\ MULT}$ - Multiplier of $V_{R\ MAX}$ to determine $V_{R\ MIN}$, except for Sub-Type D or J use actual $V_{R\ MIN}$ value.
38-41	K_E - Exciter Constant Related to Self-Excited Field K_E = 1.0 for separate excitation; K_E = 0.0 for self-excitation
42-45	T_E - Exciter Time Constant
46-49	$S_{E\ .75\ MAX}$ - Exciter Saturation at 75% of Maximum Field Voltage K_I - Current Circuit Gain (Type D Excitation System)
50-53	$S_{E\ MAX}$ - Exciter Saturation at Maximum Field Voltage K_P - Potential Circuit Gain (Type D Excitation System)
54-58	$E_{FD\ MIN}$ - Minimum Field Voltage
59-62	$E_{FD\ MAX}$ - Maximum Field Voltage $V_{B.MAX}$ - Maximum Exciter Voltage (Type D Excitation System)
63-66	K_F - Regulator Stabilizing Circuit Gain
67-70	T_F - Regulator Stabilizing Circuit Time Constant
71-75	X_L - Commutating Reactance (Type D Excitation System)
76-80	T_{F1} - Regulator Stabilizing Circuit Time Constant (Type B Excitation System)

3-8

U. S. DEPARTMENT OF THE INTERIOR – BONNEVILLE POWER ADMINISTRATION

BPA STABILITY PROGRAM
WSCC INPUT FORMAT EXCITER DATA

SHEET _____ OF _____

CODE _____

DATE _____

CHG. CODE

(BLANK) = ADD NEW EXCITER
D = DELETE EXCITER
M = CHANGE DATA ENTERED ONLY

*Use Parameter only as indicated for D, E or H type Exciter

ϕ Applies for type D,H, or J Exciter

K_E = 1.0 for separate Exciter

K_E = .0 for self Excitation

E	SUB TYPE	CHG CODE	NAME	KV	ID	T_R	K_A K_V (E)*	T_A T_{RH} (E)*	T_{A1}	V_R MIN MULT V_R MIN (ϕ)*	K_E K_{E1} (H)*	T_E	$S_{E.75M}$ K_I (D)*	S_E MAX K_p (D)*	EFD_{MIN}	EFD_{MAX} VB_{MAX} (D)*	K_F	T_F	K_{F1} X_L (D)*	T_{F1}
1	2	3	4-11	12-15	16	17-20	21-25	26-29	30-33	34-37	38-41	42-45	46-49	50-53	54-58	59-62	63-66	67-70	71-75	76-80
E	J																			

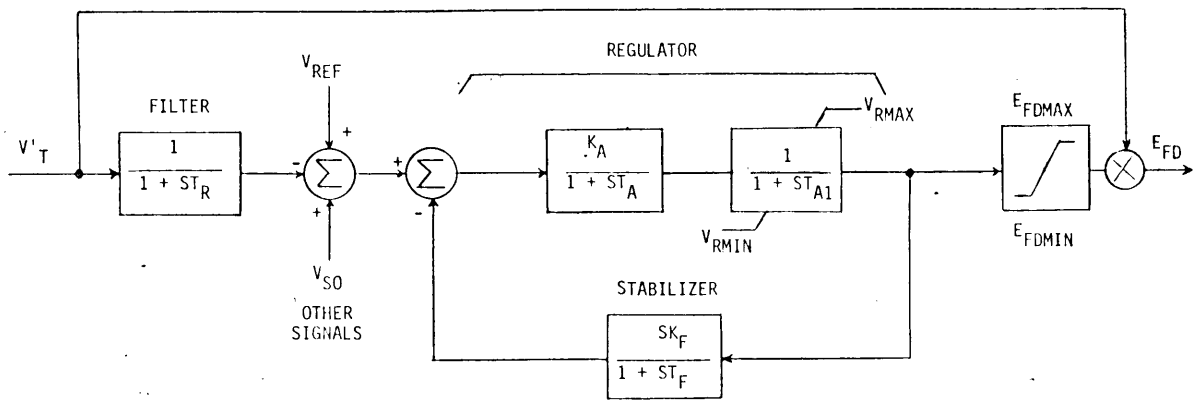

INPUT DATA

1. Specify: T_R, K_A, T_A, V_{RMIN}, E_{FDMIN}, E_{FDMAX}, K_F, T_F
2. The magnitude of per unit terminal voltage is used as input to the regulator filter.
3. The field voltage output is in per unit where one per unit field voltage is that required to give one per unit terminal voltage on the generator air-gap line.
4. $V_{RMAX} = -V_{RMIN}$

WSCC STABILITY PROGRAM EXCITATION SYSTEM MODELS	
WSCC TYPE J	FIGURE 8
	DEC. 17, 1974
WESTINGHOUSE STATIC GRAND COULEE PP #3	

COLUMN

1	Card Type - E
2	Exciter Type (A,B,C,D,E,F,G,J, or K)
3	Blank
4-15	Bus Name
16	Machine Identification (alphanumeric)
17-20	T_R - Regulator Input Filer Time Constant
21-25	K_A - Regulator Gain
	K_V - Fast Raise/Lower Contact Setting (Type E Excitation System)
26-29	T_A - Regulator Amplifier Time Constant
	T_{RH} - Rheostat Time Constant (Type E Excitation System)
30-33	T_{A1} - Regulator Amplifier Time Constant
34-37	$V_{R\ MIN\ MULT}$ - Multiplier of $V_{R\ MAX}$ to determine $V_{R\ MIN}$
	$V_{R\ MIN}$ - Minimum regulator voltage (Types D & J Excitation System)
38-41	K_E - Exciter Constant Related to Self-Excited Field
	K_E = 1.0 for separate excitation; K_E = 0.0 for self-excitation
42-45	T_E - Exciter Time Constant
46-49	$S_{E\ .75\ MAX}$ - Exciter Saturation at 75% of Maximum Field Voltage
	K_I - Current Circuit Gain (Type D Excitation System)
50-53	$S_{E\ MAX}$ - Exciter Saturation at Maximum Field Voltage
	K_p - Potential Circuit Gain (Type D Excitation System)
54-58	$E_{FD\ MIN}$ - Minimum Field Voltage
59-62	$E_{FD\ MAX}$ - Maximum Field Voltage
	$V_{B\ MAX}$ - Maximum Exciter Voltage (Type D Excitation System)
63-66	K_F - Regulator Stabilizing Circuit Gain
	K'_A - Regulator Gain (Type E Excitation System)
67-70	T_F - Regulator Stabilizing Circuit Time Constant
71-75	X_L - Commutating Reactance (Type D Excitation System)
76-80	T_{F1} - Regulator Stabilizing Circuit Time Constant (Type B Excitation System)

BPA STABILITY PROGRAM
WSCC INPUT FORMAT EXCITER DATA

SHEET _____ OF _____

CODE _____

DATE _____

CHG. CODE

(BLANK) = ADD NEW EXCITER
D = DELETE EXCITER
M = CHANGE DATA ENTERED ONLY

*Use Parameter only as indicated for D, E or H type Exciter

ϕ Applies for type D,H, or J Exciter

K_E = 1.0 for separate Exciter

K_E = .0 for self Excitation

E	SUB TYPE	CHG CODE	NAME	KV	ID	T_R	K_A K_V (E)*	T_A T_{RH} (E)*	T_{A1}	V_R MIN MULT V_R MIN (ϕ)*	K_E K_{E1} (H)*	T_E	$S_{E.75M}$ K_I (D)*	S_E MAX K_p (D)*	EFD_{MIN}	EFD_{MAX} VB_{MAX} (D)*	K_F	T_F	K_{F1} X_L (D)*	T_{F1}
1	2	3	4-11	12-15	16	17-20	21-25	26-29	30-33	34-37	38-41	42-45	46-49	50-53	54-58	59-62	63-66	67-70	71-75	76-80
E	K																			

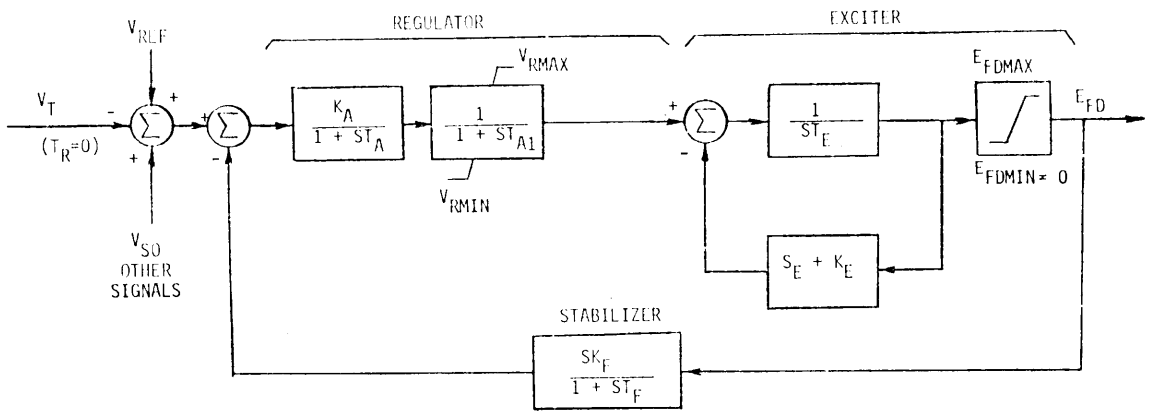

INPUT DATA

1. Specify: K_A, T_A, T_{A1}, $V_{RMIN\ MULT}$, K_E = 1.0, T_E, $S_{E.75MAX}$, S_{EMAX}, E_{FDMIN} = 0, E_{FDMAX}, K_F, T_F
2. $V_{RMAX} = (S_{EMAX} + K_E)\ (E_{FDMAX})$
   $V_{RMIN} = (V_{RMAX})\ (V_{RMIN\ MULT})$
3. The magnitude of per unit terminal voltage is used as input to the excitation system.
4. The field voltage output is in per unit where one per unit field voltage is that required to give one per unit terminal voltage on the generator air-gap line.

WSCC STABILITY PROGRAM EXCITATION SYSTEM MODELS	
W S C C T Y P E K	FIGURE 9 AUGUST 17, 19
GENERAL ELECTRIC ALTERREX	

COLUMN	
1	Card Type - E
2	Card Sub-Type (A, B, C, D, E, F, G, J or K)
3	Blank
4-15	Bus Name, Bus Base kV in Columns 12-15
16	Machine Identification (alphanumeric)
17-20	T_R - Regulator Input Filter Time Constant
21-25	K_A - Regulator Gain K_V - Fast Raise/Lower Contact Setting (Type E Excitation System)
26-29	T_A - Regulator Amplifier Time Constant T_{RH} - Rheostat Time Constant (Type E Excitation System)
30-33	T_{A1} - Regulator Amplifier Time Constant
34-37	$V_{R\ MIN\ MULT}$ - Multiplier of $V_{R\ MAX}$ to determine $V_{R\ MIN}$, except for Sub-Type D or J use actual $V_{R\ MIN}$ value.
38-41	K_E - Exciter Constant Related to Self-Excited Field K_E = 1.0 for separate excitation; K_E = 0.0 for self-excitation
42-45	T_E - Exciter Time Constant
46-49	$S_{E\ .75\ MAX}$ - Exciter Saturation at 75% of Maximum Field Voltage K_I - Current Circuit Gain (Type D Excitation System)
50-53	$S_{E\ MAX}$ - Exciter Saturation at Maximum Field Voltage K_P - Potential Circuit Gain (Type D Excitation System)
54-58	$E_{FD\ MIN}$ - Minimum Field Voltage
59-62	$E_{FD\ MAX}$ - Maximum Field Voltage $V_{B.MAX}$ - Maximum Exciter Voltage (Type D Excitation System)
63-66	K_F - Regulator Stabilizing Circuit Gain
67-70	T_F - Regulator Stabilizing Circuit Time Constant
71-75	X_L - Commutating Reactance (Type D Excitation System)
76-80	T_{F1} - Regulator Stabilizing Circuit Time Constant (Type B Excitation System)

WSCC STABILITY PROGRAM
INPUT FORMAT
EXCITER DATA

ORGANIZATION _____
PROJECT _____
SHEET ___ OF ___ DATE _____

| | | |

WSCC STABILITY PROGRAM

EXCITATION SYSTEM INPUT DATA (CARD 1)

COLUMN	
1	Card Type (F).
2	Exciter Type (A-H or J-L).
4-15	Bus Name.
16	Machine Identification (alphanumeric).
17-21	R_C - Resistive Component of load compensation in per unit.*
22-26	X_C - Reactive component of load compensation in per unit.*
27-31	T_R - Regulator input filter time constant in seconds.
32-36	V_{IMAX} - Maximum internal signal within voltage regulator in per unit (Types G, K, L). V_{AMAX} - Maximum regulator internal voltage in per unit (Type F).
37-41	V_{IMIN} - Minimum internal signal within voltage regulator in per unit (Types G, K, L). V_{AMIN} - Minimum regulator internal voltage in per unit (Type F).
42-46	T_B - Voltage regulator lag time constant in seconds.
47-51	T_C - Voltage regulator lead time constant in seconds.
52-56	K_A - Voltage regulator gain in per unit. K_V - Fast raise/lower contact setting in per unit (Type E).
57-61	T_A - Voltage regulator lag time constant in seconds. T_{RH} - Rheostat travel time in seconds (Type E).
62-66	V_{RMAX} - Maximum voltage regulator output in per unit. V_{AMAX} - Maximum regulator internal voltage in per unit (Type H).

WSCC STABILITY PROGRAM

EXCITATION SYSTEM INPUT DATA (CARD 1)

COLUMN	
67-71	V_{RMIN} - Minimum voltage regulator output in per unit. V_{AMIN} - Minimum regulator internal voltage in per unit (Type H).
72-76	K_E - Exciter constant related to self-exciter field in per unit. If zero (Types A, B and E only) program will calculate K_E such that the initial regulator output is zero. K_J - First stage regulator gain in per unit (Type L).
77-80	T_E - Exciter constant in per unit seconds.

* The power base for the exciter data is specified in columns 29-32 of the generator data card (page 25). See Page 8 for other bases.

WSCC STABILITY PROGRAM

EXCITATION SYSTEM INPUT DATA (CARD 2)

COLUMN	
1	Card Type (F).
2	Card Subtype (Z).
4-15	Bus Name.
16	Machine Identification (Alphanumeric).
17-21	S_{E1} - Exciter saturation in per unit with exciter voltage at value specified in columns 32-36. K_I - Current circuit gain coefficient in per unit* (Types D, L).
22-26	SE_2 - Exciter saturation in per unit with exciter voltage at 75% of value specified in columns 32-36. K_p - Potential circuit gain coefficient in per unit (Types D, L).
27-31	E_{FDMIN} - Minimum exciter output voltage in per unit (Type J). E_{FDN} - Value of field voltage in per unit at which the stabilizer feedback gain changes (Type H.) θ_p - Potential circuit phase angle in degrees (Type L).
32-36	E_{FD1} - Field voltage in per unit (at or near the maximum field voltage) for which S_{E1} is specified (Types A, B, E). V_{E1} - Exciter voltage back of commutating reactance in per unit (at or near the maximum exciter voltage) for which S_{E1} is specified (Types C, F, H). E_{FDMAX} - Maximum field voltage in per unit (Types D, L).
37-41	K_F - Excitation control system stabilizer gain in per unit. K_G - Inner loop feedback constant in per unit (Type L).
42-46	T_F - Excitation control system stabilizer gain in per unit. V_{GMAX} - Maximum inner loop feedback voltage (Type L).

WSCC STABILITY PROGRAM

EXCITATION SYSTEM INPUT DATA (CARD 2)

COLUMN	
47-51	K_C - Rectifier loading factor in per unit related to commutating reactance.
52-56	K_D - Demagnetizing factor in per unit (Types C, F, H).
	X_L - Reactance associated with potential source in per unit* (Type L).
57-61	K_B - Second stage regulator gain in per unit (Type F).
	V_{LV} - Exciter low voltage limit reference in per unit (Type H).
62-66	K_L - Exciter field current limit gain in per unit (Type F).
	K_{LV} - Exciter low voltage limit signal gain in per unit (Type H).
67-71	K_H - Exciter field current feedback gain in per unit (Type F).
	K_N - Upper excitation control system stabilizer gain in per unit (Type H).
72-76	V_{LR} - Exciter field current limit reference in per unit (Type F).
	K_R - Constant associated with regulator and alternator field power supply in per unit (Type H).

* The power base for the exciter data is specified in columns 29-32 of the generator data card (page 25). See page 8 for other bases.

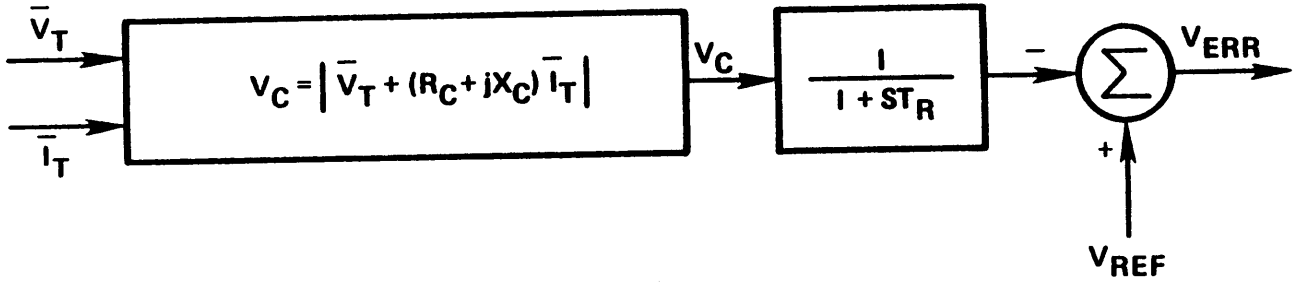

INPUT DATA

OPTIONAL: R_C, X_C, T_R

WSCC STABILITY PROGRAM EXCITATION SYSTEM MODELS	
WSCC TYPES A–L	FIGURE 1 JULY 1, 1981
VOLTAGE TRANSDUCER AND LOAD COMPENSATION	

3-45

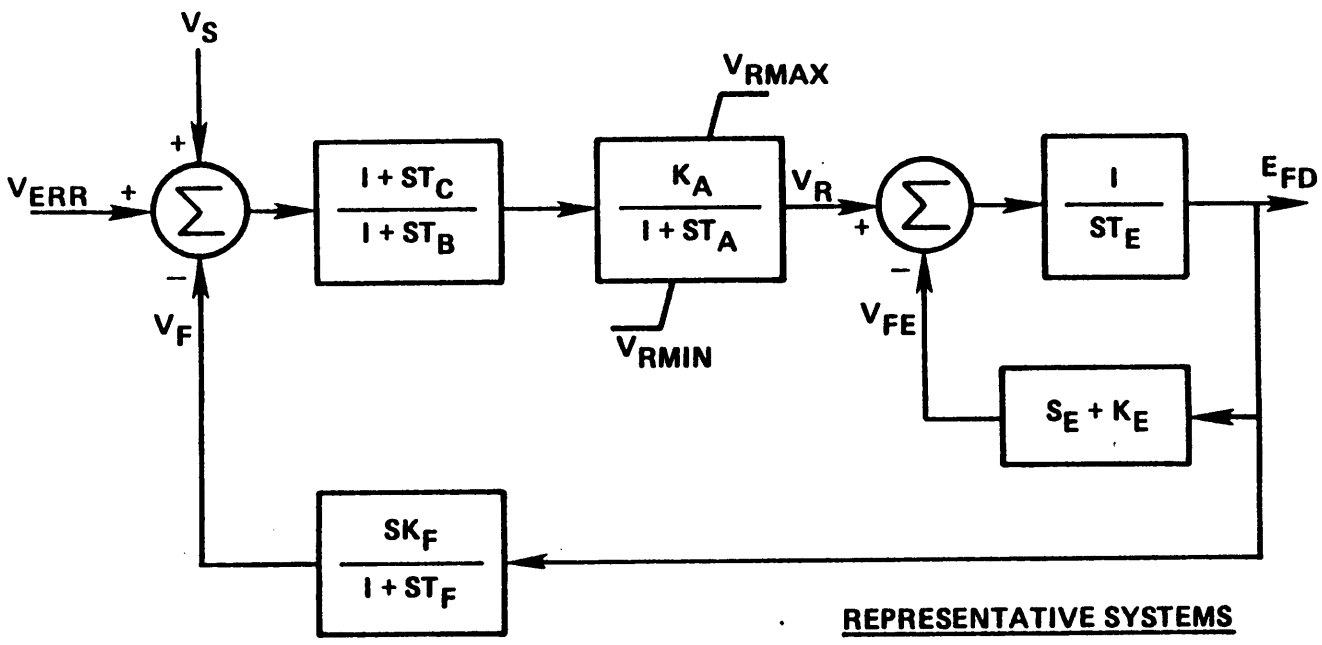

REPRESENTATIVE SYSTEMS

ALLIS CHALMERS	REGULEX REGULATOR
GENERAL ELECTRIC	AMPLIDYNE REGULATOR
	GDA REGULATOR
WESTINGHOUSE	MAG-A-STAT REGULATOR
	ROTOTROL REGULATOR
	SILVERSTAT REGULATOR
	TRA REGULATOR

INPUT DATA

1. MANDATORY: KA, TA, V_{RMAX}, V_{RMIN}, TE, SE_1, SE_2, E_{FD1}, K_F, T_F
2. OPTIONAL: T_B, T_C, K_E
3. IF $T_C > 0.0$ THEN T_B MUST ALSO BE GREATER THAN ZERO.
4. IF $K_E = 0.0$ PROGRAM WILL CALCULATE K_E SUCH THAT $V_{RO} = 0.0$.

WSCC STABILITY PROGRAM EXCITATION SYSTEM MODELS	
WSCC TYPE A (DC1)	FIGURE 2
	JULY 1, 1981
DC COMMUTATOR	

3-16

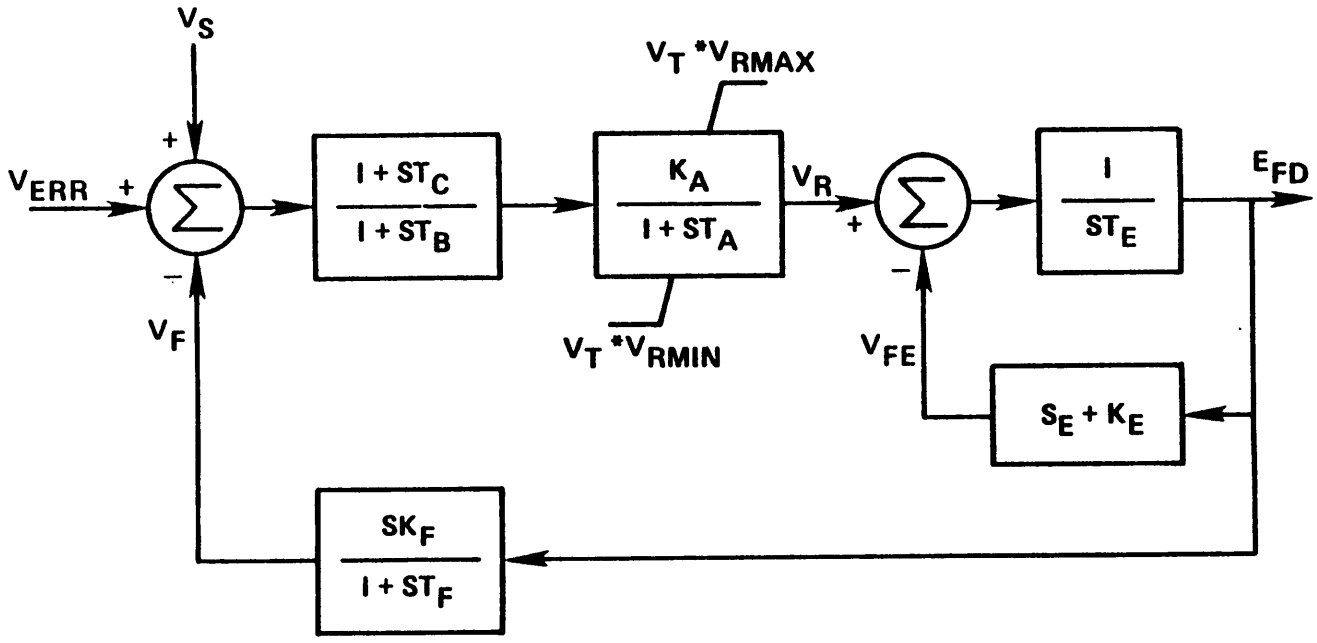

INPUT DATA

1. MANDATORY: KA, TA, V_{RMAX}, V_{RMIN}, TE, SE_1, SE_2, E_{FD1}, K_F, T_F
2. OPTIONAL: T_B, T_C, K_E
3. IF $T_C > 0.0$ THEN T_B MUST ALSO BE GREATER THAN ZERO.
4. IF $K_E = 0.0$ PROGRAM WILL CALCULATE K_E SUCH THAT $V_{RO} = 0.0$.

REPRESENTATIVE SYSTEMS

SOLID STATE, CONTROLLED RECTIFIER REPLACEMENTS FOR VARIOUS FORMS OF OLDER MECHANICAL AND ROTATING AMPLIFIERS.

WSCC STABILITY PROGRAM EXCITATION SYSTEM MODELS	
WSCC TYPE B (DC2)	FIGURE 3
	JULY 1, 1981
DC COMMUTATOR WITH REGULATOR SUPPLY FROM BUS VOLTAGE	

3-17

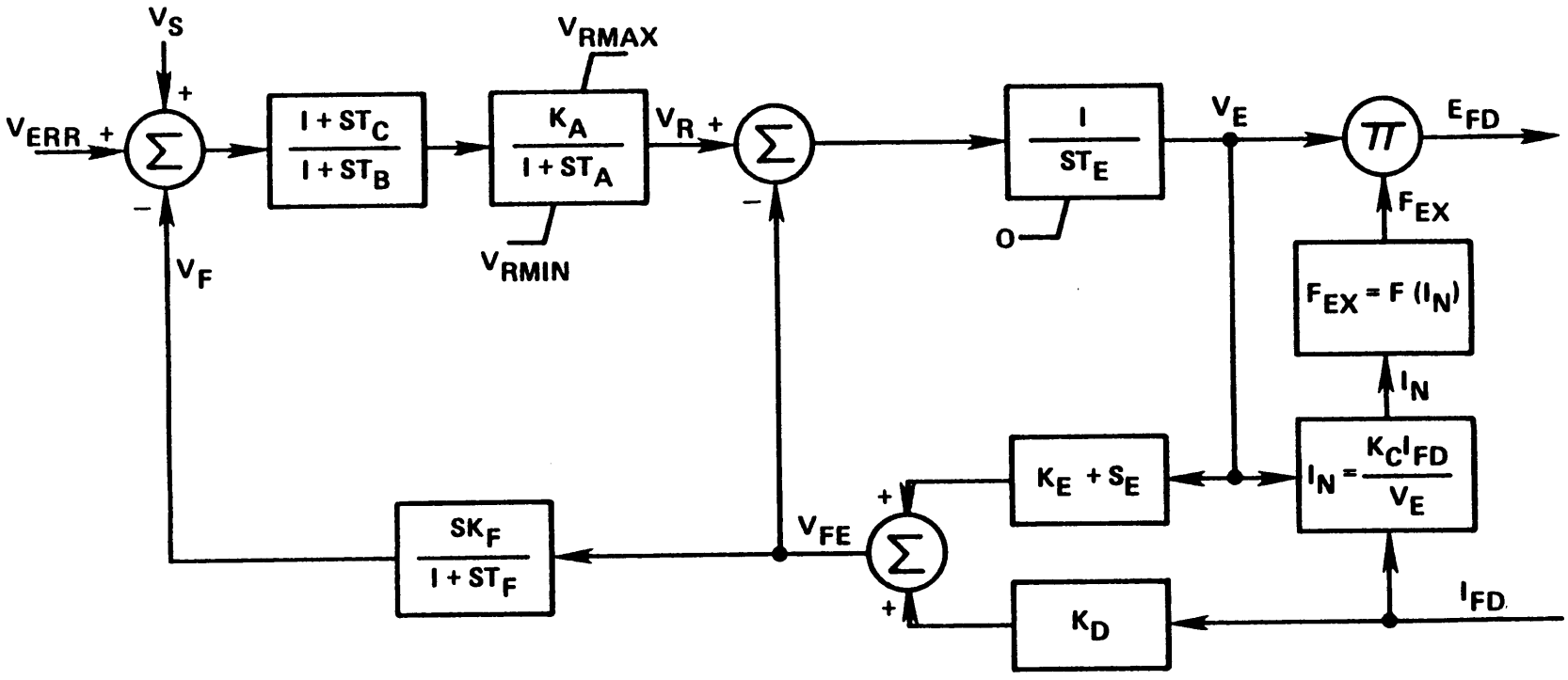

INPUT DATA

1. MANDATORY: KA, TA, V_{RMAX}, V_{RMIN}, K_E, T_E, S_{E1}, S_{E2}, V_{E1}, K_F, T_F
2. OPTIONAL: T_B, T_C, K_C, K_D
3. IF $T_C > 0.0$ THEN T_B MUST ALSO BE GREATER THAN ZERO.

REPRESENTATIVE SYSTEM

WESTINGHOUSE BRUSHLESS

WSCC STABILITY PROGRAM EXCITATION SYSTEM MODELS	
WSCC TYPE C (AC1)	FIGURE 4
	JULY 1, 1981
ALTERNATOR WITH NON-CONTROLLED RECTIFIERS	

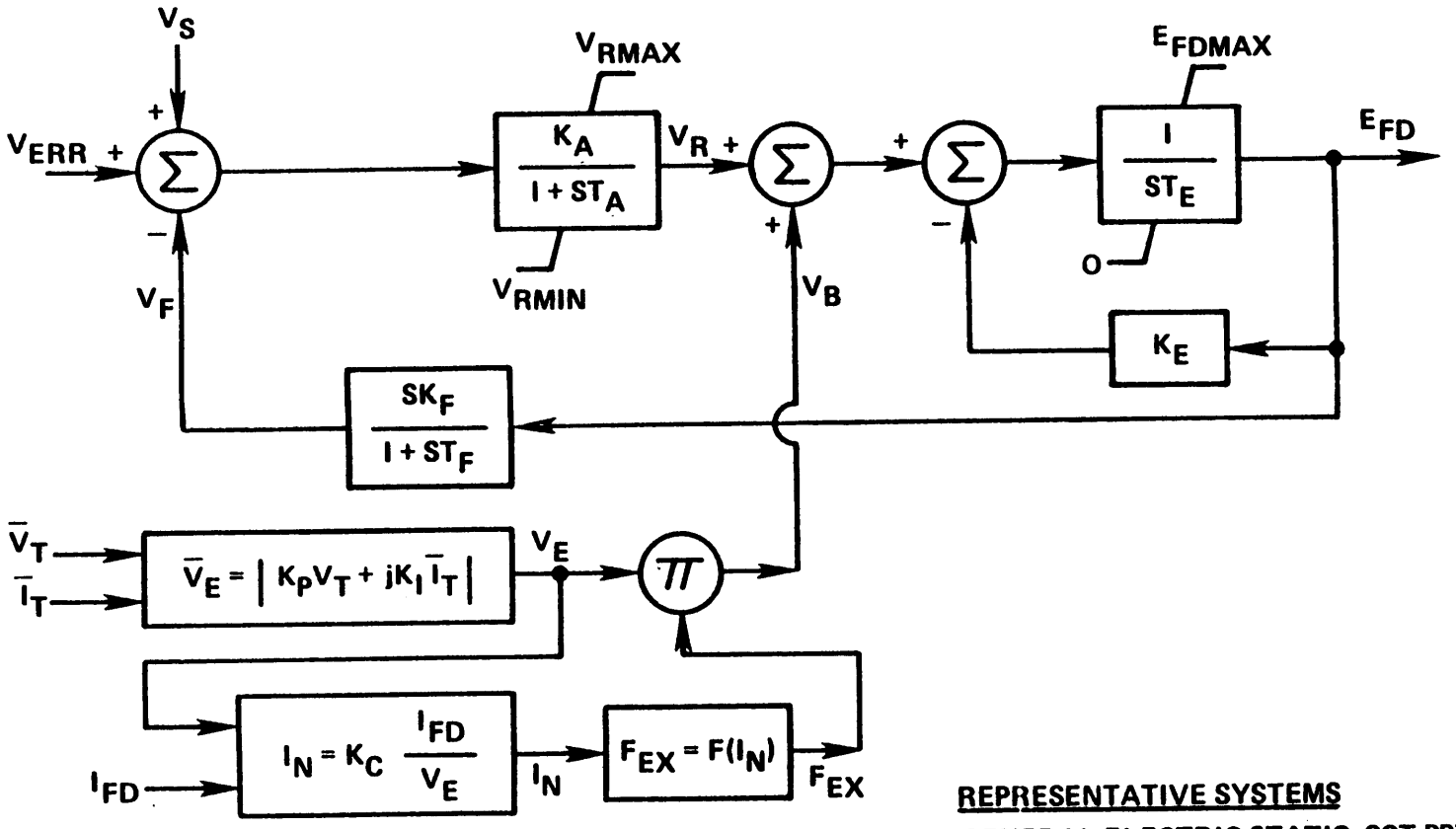

INPUT DATA

1. MANDATORY: K_A, T_A, V_{RMAX}, V_{RMIN}, K_E, T_E, E_{FDMAX}, K_F, T_F, K_I, K_P, K_C

REPRESENTATIVE SYSTEMS

GENERAL ELECTRIC STATIC, SCT-PPT OR SCPT.

WSCC STABILITY PROGRAM EXCITATION SYSTEM MODELS	
WSCC TYPE D (ST2)	FIGURE 5
	JULY 1, 1981
COMPOUND SOURCE RECTIFIER	

3-19

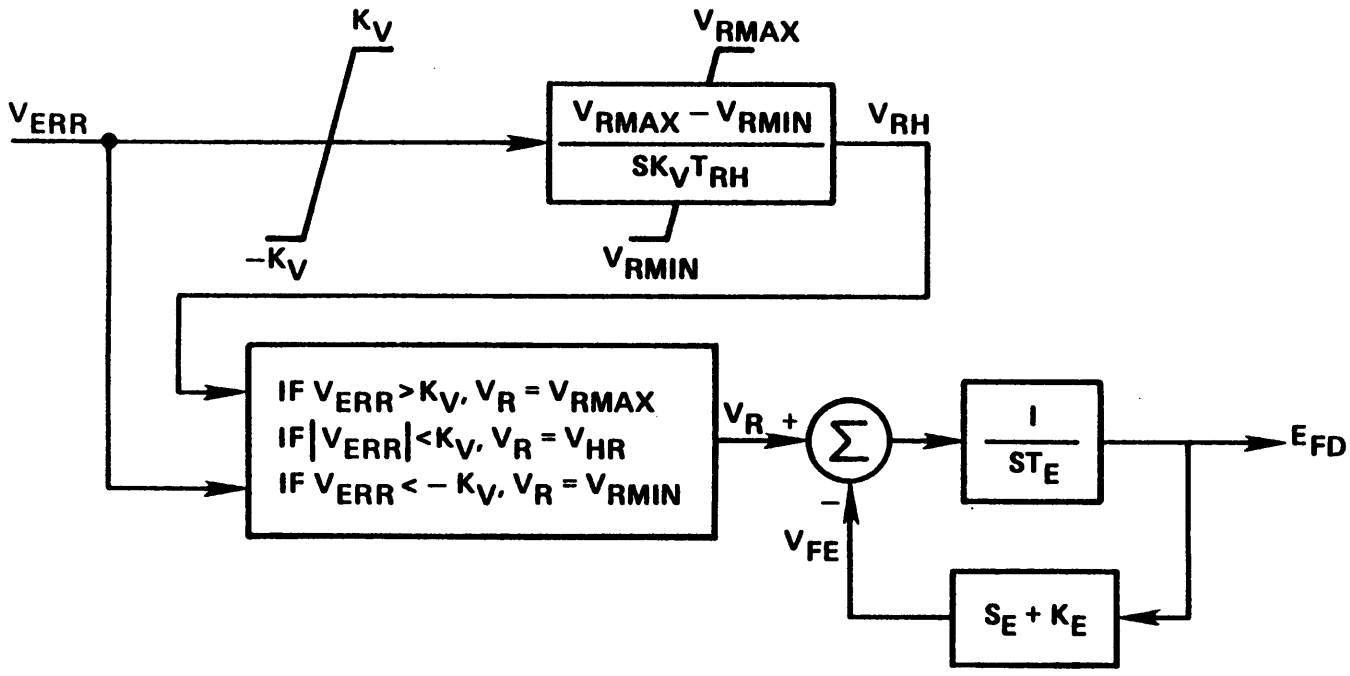

INPUT DATA

1. MANDATORY: K_V, T_{RH}, V_{RMAX}, V_{RMIN}, T_E, S_{E1}, S_{E2}, E_{FD1}
2. OPTIONAL: K_E
3. IF $K_E = 0.0$, PROGRAM WILL CALCULATE K_E SUCH THAT $V_{RO} = 0.0$.

REPRESENTATIVE SYSTEMS

GENERAL ELECTRIC – WITH GFA4 REGULATOR
WESTINGHOUSE – WITH BJ30 REGULATOR

WSCC STABILITY PROGRAM EXCITATION SYSTEM MODELS	
WSCC TYPE E (DC3)	FIGURE 6
	JULY 1, 1981
NON-CONTINUOUSLY ACTING REGULATORS	

MODEL FOR INPUTTING DATA

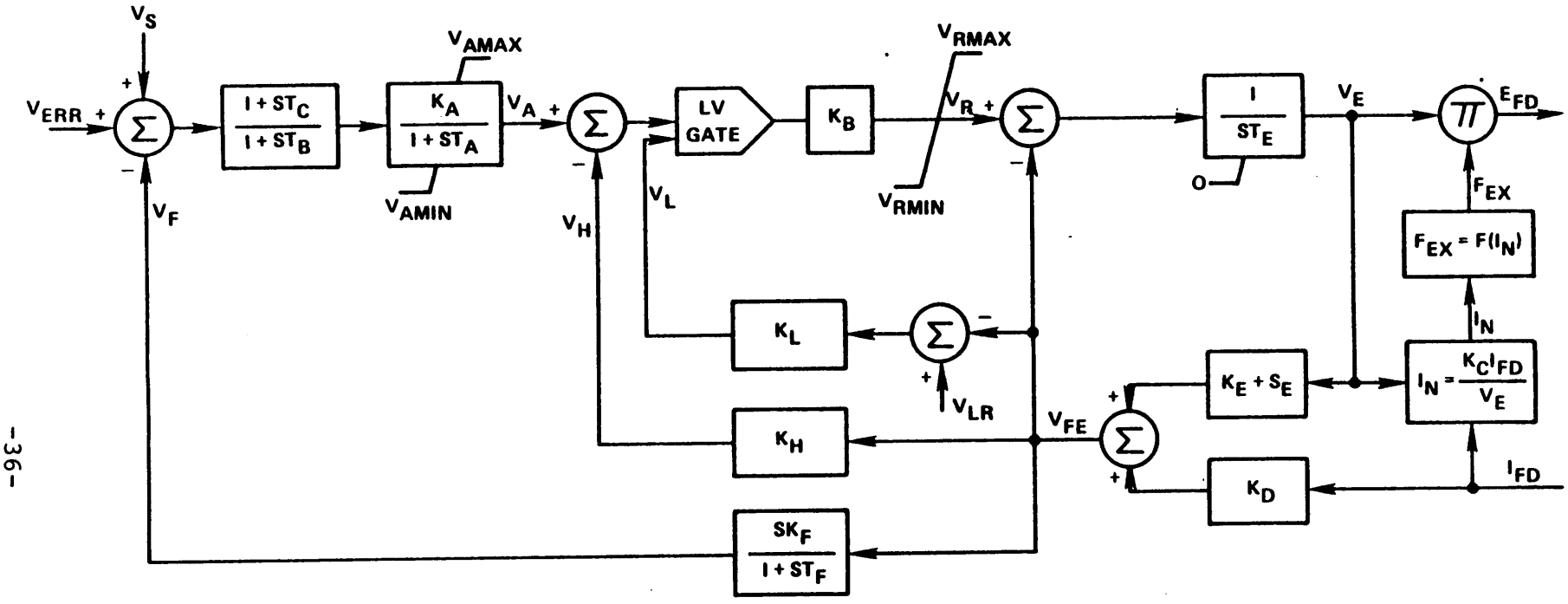

INPUT DATA

1. MANDATORY: V_{AMAX}, V_{AMIN}, K_A, T_A, V_{RMAX}, V_{RMIN}, K_E, T_E, S_{E1}, S_{E2}, V_{E1}, K_F, T_F, K_B, K_L, V_{LR}
2. OPTIONAL: T_B, T_C, K_C, K_D, K_H
3. IF $T_C > 0.0$ THEN T_B MUST ALSO BE GREATER THAN ZERO.
4. SEE FIGURE 8 FOR INTERNAL MODEL.

REPRESENTATIVE SYSTEM

WESTINGHOUSE HIGH INITIAL RESPONSE BRUSHLESS

WSCC STABILITY PROGRAM EXCITATION SYSTEM MODELS	
WSCC TYPE F (AC2)	FIGURE 7
	JULY 1, 1981
HIGH INITIAL RESPONSE ALTERNATOR WITH NON-CONTROLLED RECTIFIERS	

3-21

INTERNAL MODEL

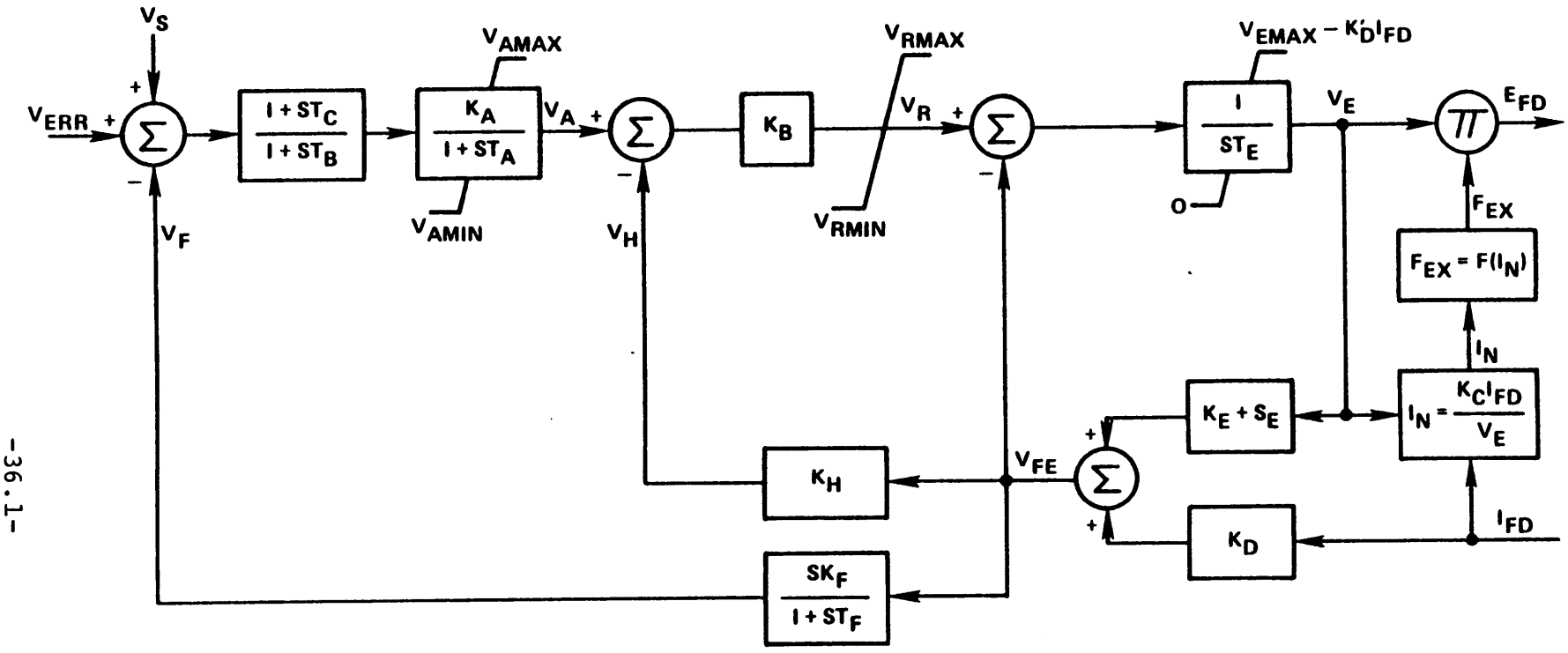

$V_{FEMAX} = (V_{LR} K_L K_B) / (1 + K_L K_B)$

$V_{EMAX} = (V_{FEMAX}) / (K_E + S_E)$

$K'_D = (K_D) / (K_E + S_E)$

$S_E = F(V_E)$

WSCC STABILITY PROGRAM EXCITATION SYSTEM MODELS	
WSCC TYPE F	FIGURE 8 JULY 1, 1981
HIGH INITIAL RESPONSE ALTERNATOR WITH NON-CONTROLLED RECTIFIERS	

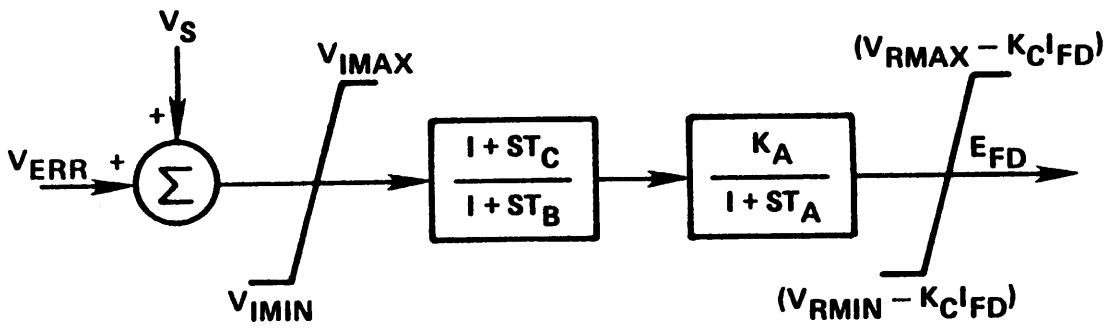

INPUT DATA

1. MANDATORY: V_{IMAX}, V_{IMIN}, K_A, T_A, V_{RMAX}, V_{RMIN}
2. OPTIONAL: T_B, T_C, K_C
3. IF $T_C > 0.0$ THEN T_B MUST ALSO BE GREATER THAN ZERO.

REPRESENTATIVE SYSTEMS

GENERAL ELECTRIC ALTHYREX
GENERAL ELECTRIC ROTATING THYRISTOR

WSCC STABILITY PROGRAM EXCITATION SYSTEM MODELS	
WSCC TYPE G (AC4)	FIGURE 9
	JULY 1, 1981
ALTERNATOR WITH CONTROLLED RECTIFIER	

MODEL FOR INPUTTING DATA

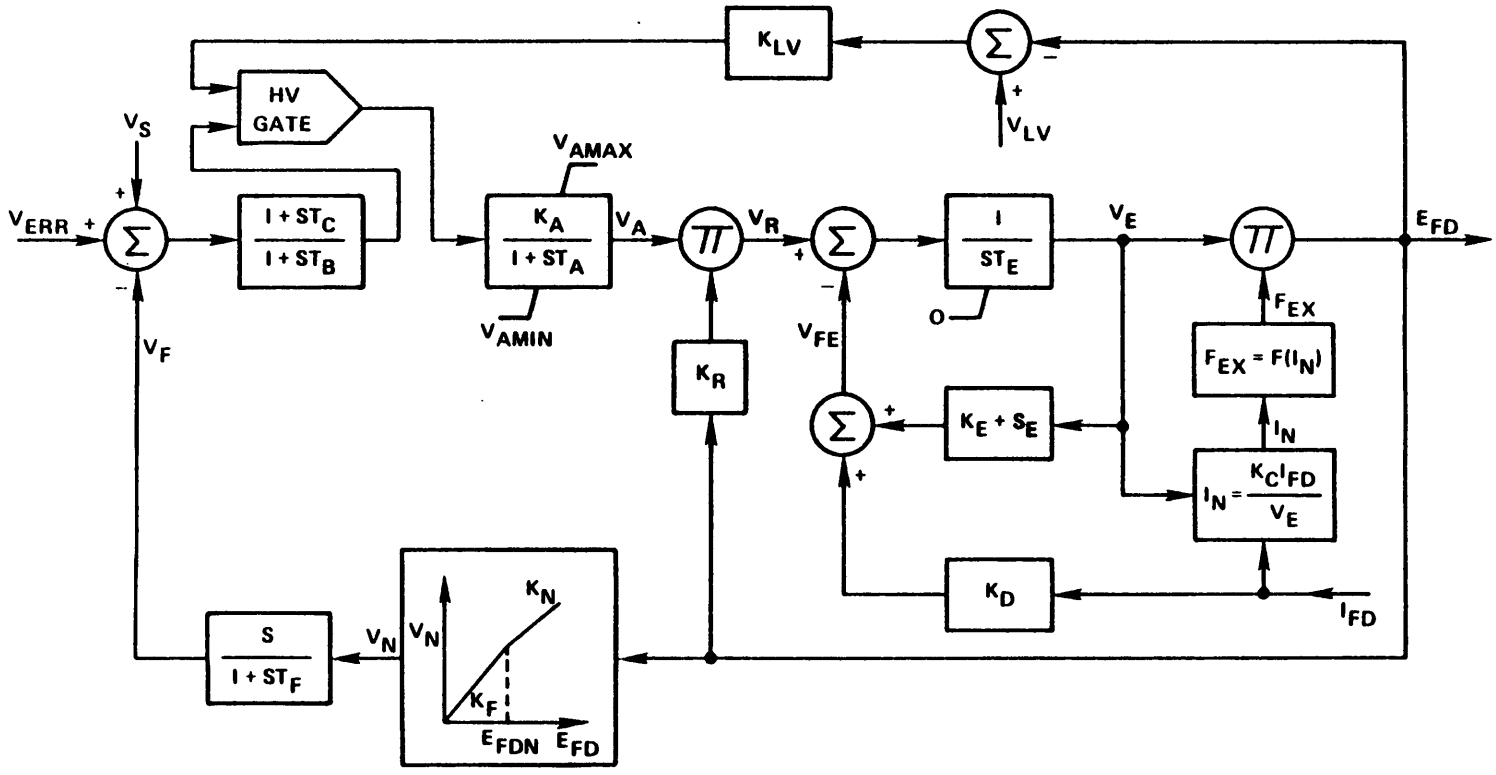

INPUT DATA

1. MANDATORY: K_A, T_A, V_{AMAX}, V_{AMIN}, K_E, T_E, S_{E1}, S_{E2}, E_{FDN}, V_{E1}, K_F, T_F, V_{LV}, K_{LV}, K_N, K_R

2. OPTIONAL: T_B, T_C, K_C, K_D

3. IF $T_C > 0.0$ THEN T_B MUST ALSO BE GREATER THAN ZERO.

REPRESENTATIVE SYSTEM

GENERAL ELECTRIC ALTERREX

WSCC STABILITY PROGRAM EXCITATION SYSTEM MODELS	
WSCC TYPE H (AC3)	FIGURE 10
	JULY 1, 1981
ALTERNATOR REGULATOR POWER TERMINAL VOLTAGE DEPENDENT	

3-24

INTERNAL MODEL

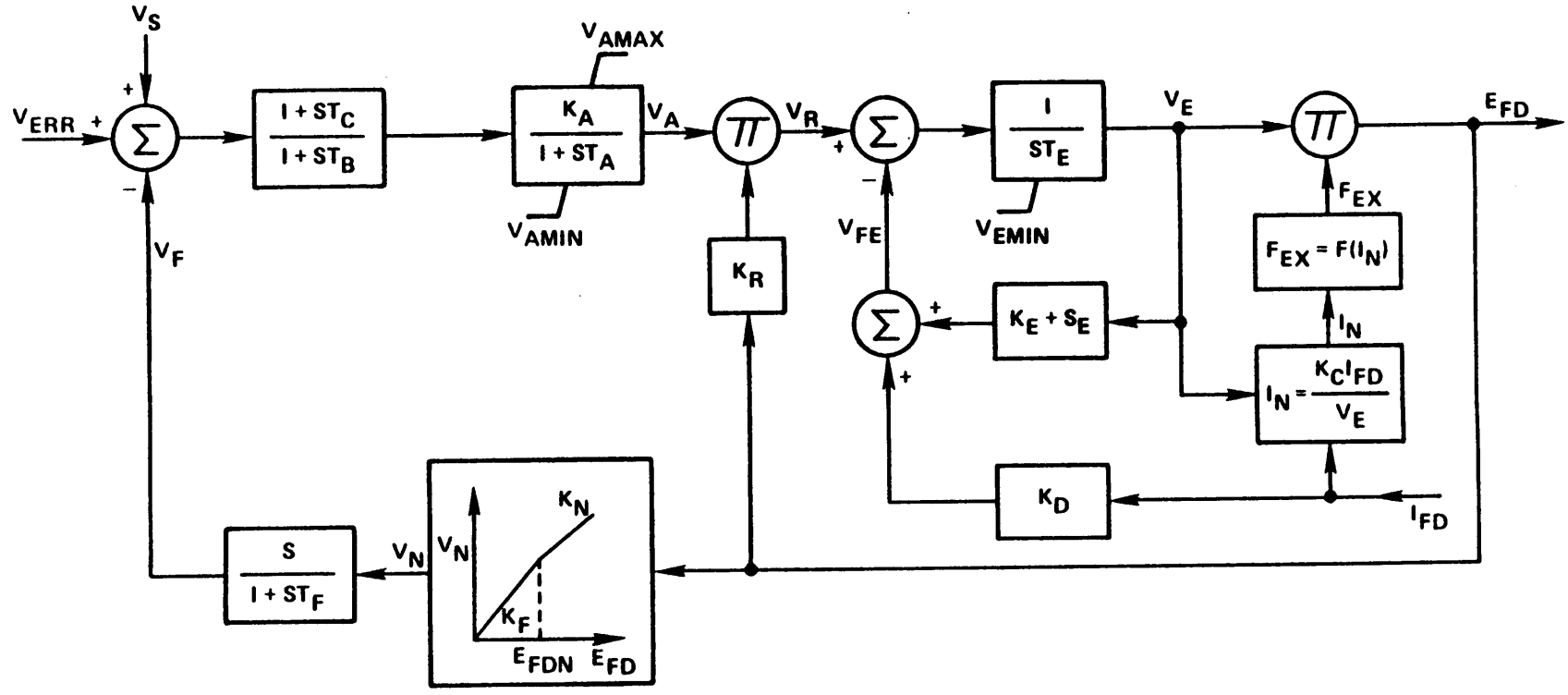

$V_{EMIN} = V_{LV} / F_{EX}$

WSCC STABILITY PROGRAM EXCITATION SYSTEM MODELS	
WSCC TYPE H	FIGURE 11 JULY 1, 1981
ALTERNATOR WITH REGULATOR POWER TERMINAL VOLTAGE DEPENDENT	

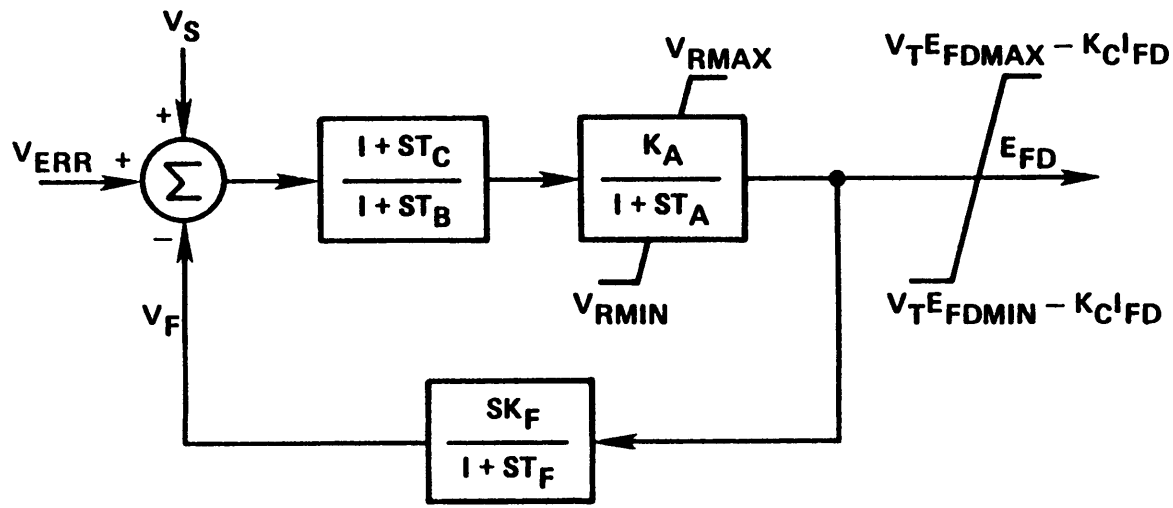

INPUT DATA

1. MANDATORY: K_A, T_A, V_{RMAX}, V_{RMIN}, E_{FDMIN}, K_F, T_F, E_{FDMAX}

2. OPTIONAL: T_B, T_C, K_C

3. IF $T_C > 0.0$ THEN T_B MUST ALSO BE GREATER THAN ZERO.

WSCC STABILITY PROGRAM EXCITATION SYSTEM MODELS	
WSCC TYPE J	FIGURE 12
	JULY 1, 1981
TRANSITION MODEL	

3-26

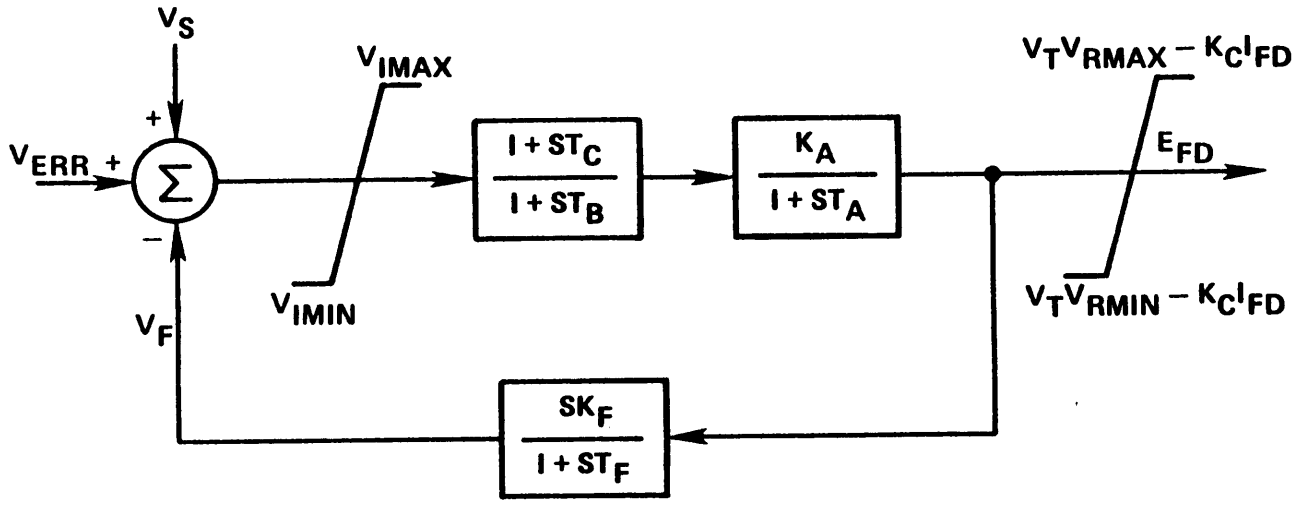

INPUT DATA

1. MANDATORY: V_{IMAX}, V_{IMIN}, K_A, T_A, V_{RMAX}, V_{RMIN}
2. OPTIONAL: T_B, T_C, K_F, T_F, K_C
3. IF $T_C > 0.0$ THEN T_B MUST ALSO BE GREATER THAN ZERO.
4. IF $K_F > 0.0$ THEN T_F MUST ALSO BE GREATER THAN ZERO.

REPRESENTATIVE SYSTEMS

CANADIAN GENERAL ELECTRIC SILCOMATIC EXCITERS
WESTINGHOUSE CANADA SOLID STATE THYRISTOR EXCITER
WESTINGHOUSE TYPE PS STATIC EXCITATION SYSTEMS WITH TYPE WTA OR WHS REGULATORS

WSCC STABILITY PROGRAM EXCITATION SYSTEM MODELS	
WSCC TYPE K (ST1)	FIGURE 13 JULY 1, 1981
RECTIFIER POTENTIAL SOURCE-CONTROLLED	

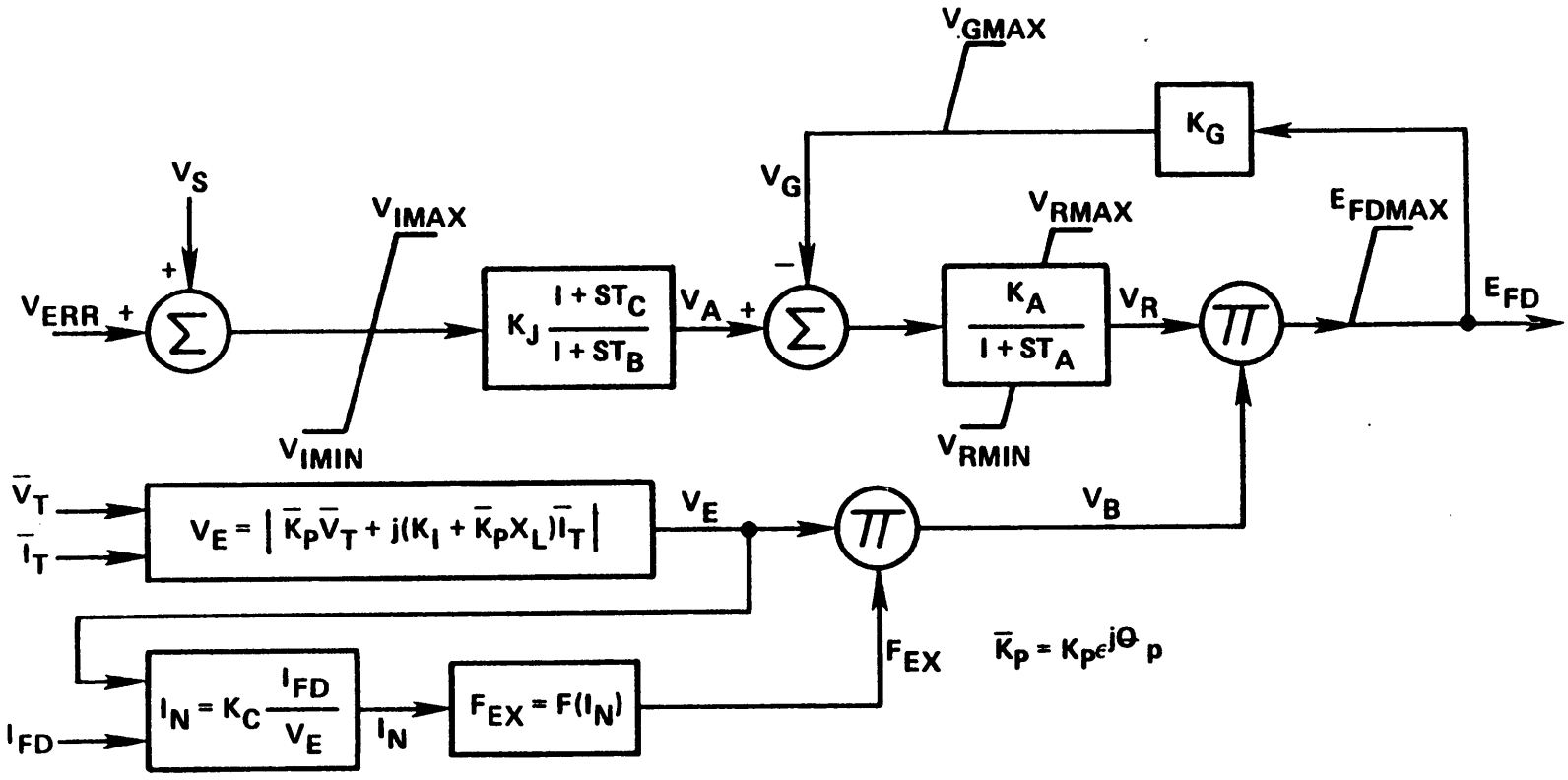

INPUT DATA

1. MANDATORY: V_{IMAX}, V_{IMIN}, K_A, T_A, V_{RMAX}, V_{RMIN}, K_J, K_I, K_P, E_{FDMAX}, K_C, X_L, K_G, V_{GMAX}

2. OPTIONAL: T_B, T_C, θ_P

3. IF $T_C > 0.0$ THEN T_B MUST ALSO BE GREATER THAN ZERO.

REPRESENTATIVE SYSTEMS

GENERAL ELECTRIC GENERREX
GENERAL ELECTRIC SHUNT THYRISTOR

WSCC STABILITY PROGRAM EXCITATION SYSTEM MODELS	
WSCC TYPE L (ST3)	FIGURE 14
	JULY 1, 1981
COMPOUND SOURCE CONTROLLED RECTIFIER	

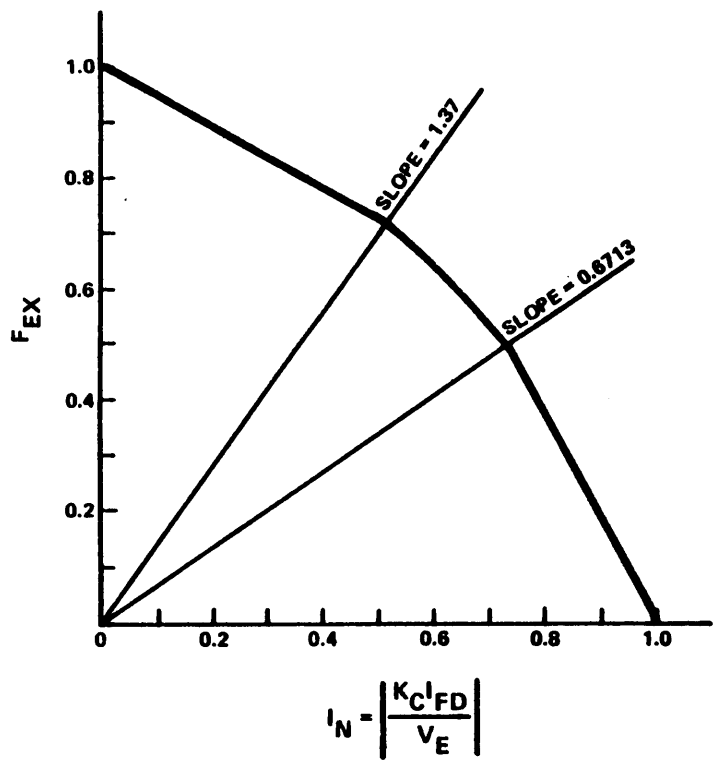

IF $I_N \leq 0.51$, $F_{EX} = 1 - 0.58\, I_N$

IF $0.51 < I_N < 0.715$, $F_{EX} = -0.865\,(I_N + 0.00826)^2 + 0.93233$

IF $I_N \geq 0.715$, $F_{EX} = 1.68 - 1.714\, I_N$

IF $F_{EX} < 0.0$, $F_{EX} = 0.0$

EXCITER TYPES C, F, H

$E_{FD} = V_E F_{EX}$

EXCITER TYPES D, L

$V_B = V_E F_{EX}$

WSCC STABILITY PROGRAM EXCITATION SYSTEM MODELS	
WSCC TYPES C, D, F, H, L	FIGURE 16 JULY 1, 1981
RECTIFIER REGULATION CHARACTERISTIC	

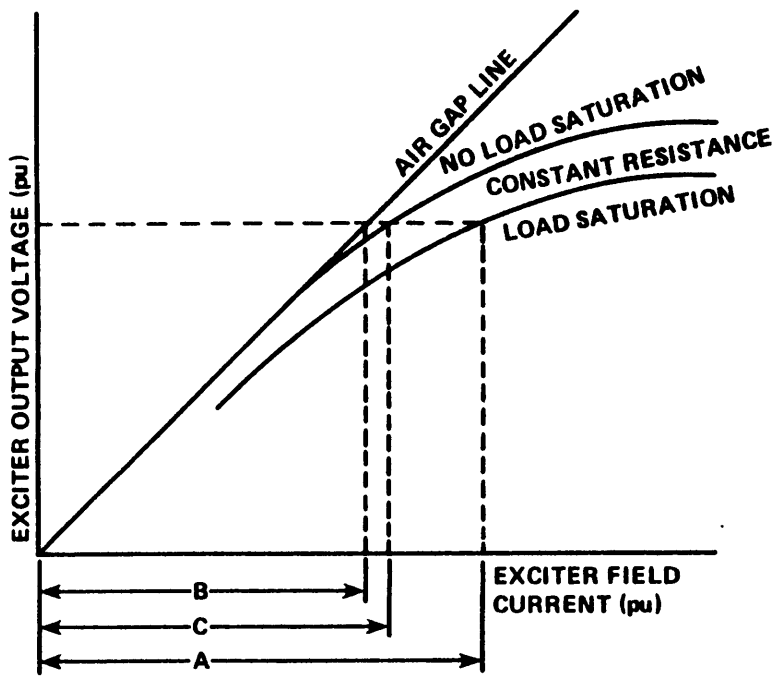

EXCITER TYPES A, B AND E
EXCITER TYPES C, F AND H ($K_C = 0$)

$S_E = (A-B)/B$

EXCITER TYPES C, F AND H ($K_C > 0$)

$S_E = (C-B)/B$

THE USER SPECIFIES TWO POINTS ON THE SATURATION CURVE. THE WSCC PROGRAM USES THE FOLLOWING FUNCTION TO DEFINE S_E FOR OTHER POINTS ON THE SATURATION CURVE:

$S_E = M\epsilon^{|N*E_{FD}|}$ (TYPES A, B, E)
(TYPES C, F, H WITH $K_C = 0$)

$S_E = M\epsilon^{|N*V_E|}$ (TYPES C, F, H WITH $K_C > 0$)

WHERE M AND N ARE CONSTANTS DETERMINED FROM THE TWO SPECIFIED POINTS OF SATURATION:

$S_{E1} = M\epsilon^{N*E_{FD1}}$ (TYPES A, B, E)
(TYPES C, F, H WITH $K_C = 0$)

$S_{E2} = M\epsilon^{.75N*E_{FD1}}$

$S_{E1} = M\epsilon^{N*V_{E1}}$ (TYPES C, F, H WITH $K_C = 0$)

$S_{E2} = M\epsilon^{.75N*V_{E1}}$

*DENOTES MULTIPLICATION

WSCC STABILITY PROGRAM EXCITATION SYSTEM MODELS	
WSCC TYPES A-C, E, F, H	FIGURE 17
	JULY 1, 1981
EXCITER SATURATION CHARACTERISTIC	

3-30

WSCC STABILITY PROGRAM

EXCITATION SYSTEMS NOMENCLATURE[1]

SYMBOL	DEFINITION
E_{FD}	Exciter output voltage (generator field voltage)
E_{FDN}	Value of E_{FD} at which feedback gain changes
F_{EX}	Rectifier loading factor
I_{FD}	Generator field current
I_N	Normalized exciter load current
K_A	Voltage regulator gain
K_B	Second stage regulator gain
K_C	Rectifier loading factor related to commutating reactance
K_D	Demagnetizing factor, function of exciter alternator reactances
K_E	Exciter constant related to self-excited field
K_F, K_N	Excitation control system stabilizer gains
K_G	Inner loop feedback constant
K_H	Exciter field current feedback gain
K_L	Gain of exciter field current limit
K_I	Current circuit gain coefficient
K_J	First stage regulator gain
K_{LV}	Gain of the exciter low voltage limit signal
K_P	Potential circuit gain coefficient
K_R	Constant associated with regulator and alternator field power supply

(1) Maximum and minimum limits of parameters are not shown explicitly in the nomenclature but are represented by the appropriate subscript (max or min) on the variable.

WSCC STABILITY PROGRAM

EXCITATION SYSTEMS NOMENCLATURE (Cont.)

SYMBOL	DEFINITION
K_S	Power system stabilizer gain
K_V	Fast raise/lower contact setting
R_C	Resistive component of load compensation
S_E	Exciter saturation function
S_{E1}	Exciter saturation at V_{E1} or E_{FD1}
S_{E2}	Exciter saturation at .75 V_{E1} or .75 E_{FD1}.
T_A, T_B T_C	Voltage regulator time constants
T_E	Exciter constant (integration rate associated with exciter control)
T_F	Excitation control system stabilizer time constant
T_R	Regulator input filter time constant
T_{RH}	Rheostat travel time
V_A	Regulator internal voltage
V_B	Available exciter voltage
V_C	Compensator voltage output
V_E	Exciter voltage back of commutating reactance
V_{ERR}	Voltage error signal
V_F	Excitation system stabilizer output
V_{FE}	Signal proportional to exciter field current
V_G	Inner loop voltage feedback
V_H, V_L	Exciter field current feedback signals
V_I	Internal signal within voltage regulator

WSCC STABILITY PROGRAM

EXCITATION SYSTEMS NOMENCLATURE (Cont.)

SYMBOL	DEFINITION
V_{LR}	Exciter field current limit reference
V_{LV}	Exciter low voltage limit reference
V_N	Rate feedback input variable
V_R	Voltage regulator output
V_{REF}	Voltage regulator reference voltage (determined to satisfy initial conditions)
V_{RH}	Field Rheostat Position
V_S	Power system stabilizer output (in per unit equivalent of terminal voltage)
V_T, I_T	Generator terminal voltage and current respectively
$\overline{V}_T$, $\overline{I}_T$	Phasor generator terminal voltage and current respectively
X_C	Reactance component of load compensation
X_L	Reactance associated with potential source
Θ_p	Potential circuit phase angle

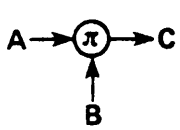

Defined as (A)(B) = C

Low Value Gate
if $A \leq B$, C = A

if A>B, C = B

High Value Gate
if $A \geq B$, C = A

A<B, C = B

* Denotes multiplication.

WSCC STABILITY PROGRAM

EXCITATION SYSTEMS NOMENCLATURE (Cont.)

SYMBOL	DEFINITION
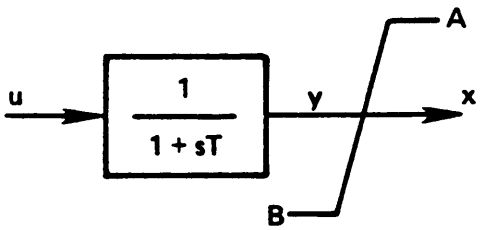	Windup Limiter $dy/dt = (u-y)/T$ If $B \leq y \leq A$, then $x=y$ If $Y > A$, then $x=A$ If $Y < B$, then $x=B$
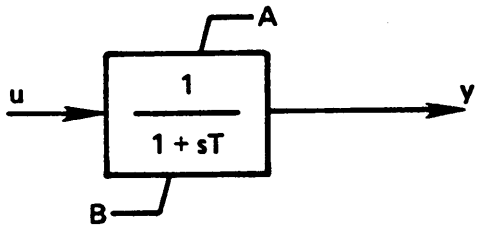	Non-Windup Limiter $f = (u-y)/T$ If $y=A$ and $f>0$, then dy/dt is set to 0 If $y=B$ and $f<0$, then dy/dt is set to 0 otherwise $dy/dt = f$ $B \leq y \leq A$

WSCC STABILITY PROGRAM
INPUT FORMAT
STATIC VAR SOURCE DATA

ORGANIZATION _____
PROJECT _____
SHEET ___ OF ___ DATE _____

CARD 1	V			NAME	KV	I D	T_{S1}	$V_{E\,MAX}$	T_{S2}	T_{S3}	A	B	T_{S4}	T_{S5}	K_{SVS}	K_{SD}	B_{MAX}	B'_{MAX}	B'_{MIN}	B_{MIN}	T_{S6}	DV	REMOTE SIGNAL BUS NAME: NAME	REMOTE SIGNAL BUS NAME: KV
COMMENTS	1	2	3	4–11	12–15	16	17–19	20–22	23–26	27–30	31	32	33–35	36–38	39–42	43–46	47–50	51–54	55–58	59–62	63–65	66–68	69–76	77–80
	V																							

IF IERR ≠ 0 ON 'W' CARD, VSCS IS INPUT TO THE FAST OVERRIDE

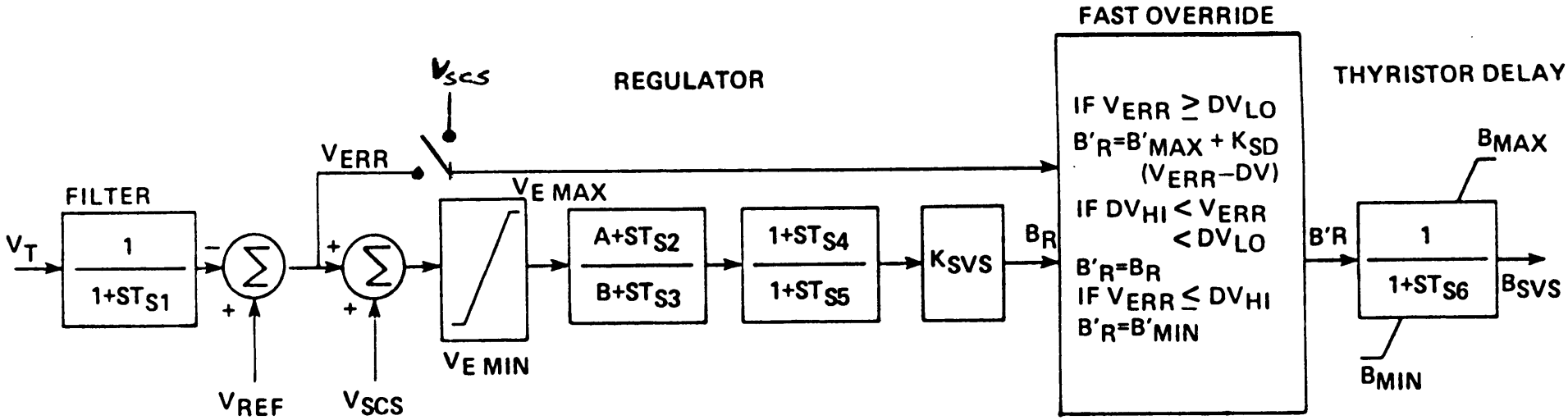

INPUT DATA

1. MANDATORY: $V_{E\,MAX}$, T_{S3}, A=B=1, K_{SVS}, B_{MAX}, B'_{MAX}, $B'_{MIN} = B_{MIN}$, T_{S6}
2. OPTIONAL: T_{S1}, T_{S2}, T_{S4}, T_{S5}, K_{SD}, DV
3. $V_{E\,MIN} = -V_{E\,MAX}$
4. IF DV=0.0 THEN $DV_{LO} = B'_{MAX}/K_{SVS}$ AND $DV_{HI} = B'_{MIN}/K_{SVS}$
5. IF DV > 0.0 THEN DV_{LO} = DV, DV_{HI} = −DV

WSCC STABILITY PROGRAM
STATIC VAR MODEL

WSCC TYPE V

FIGURE 1

APRIL 20, 1979

THYRISTOR CONTROLLED REACTOR

WSCC STABILITY PROGRAM
INPUT FORMAT
STATIC VAR SOURCE DATA

ORGANIZATION _____
PROJECT _____
SHEET ___ OF ___ DATE _____

CARD 2	W	TYPE	NAME	KV	ID	K_{S1}	T_{S7}	T_{S8}	T_{S9}	A'	B'	T_{S13}	T_{S14}	K_{S3}	V_{SCS} MAX	IERR	REMOTE SIGNAL BUS OR LINE NAME: NAME 1	KV1	ID	NAME 2	KV2	CKT
COMMENTS	1	2	3–11	12–15	16	17–20	21–24	25–28	29–32	33	34	35–38	39–42	43–46	47–50	51	52–55	56–61	62–65	66–69	70–74	75–78
	W																					
	IF IERR ≠ 0, VSCS IS USED FOR FAST OVERRIDE INPUT																					

CARD 3	W	TYPE	NAME	KV	ID	K_{S2}	T_{S10}	T_{S11}	T_{S12}
COMMENTS	1	2	3–11	12–15	16	17–20	21–24	25–28	29–32
	W								

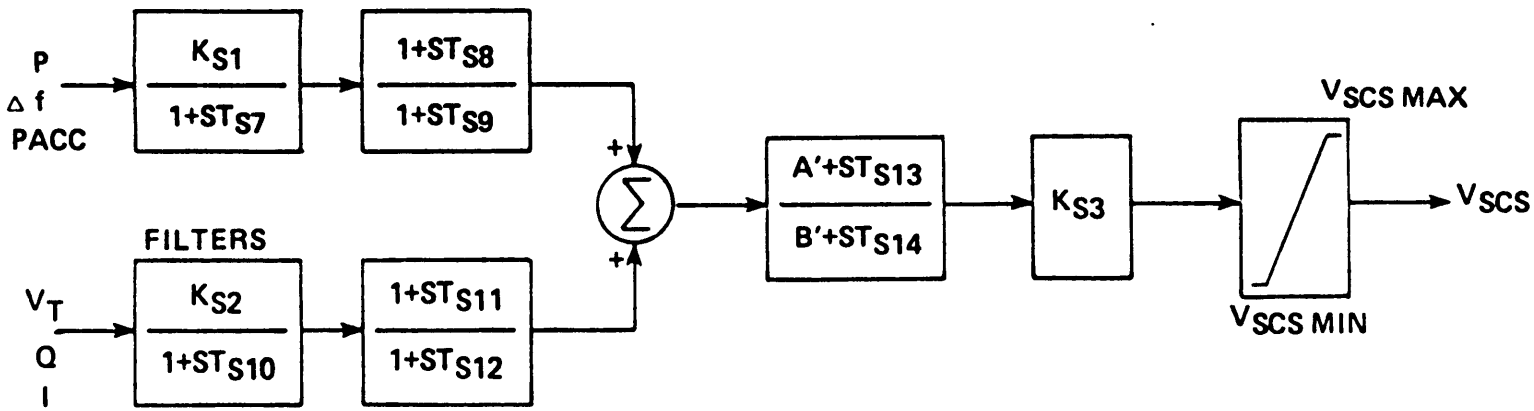

INPUT DATA

1. MANDATORY: K_{S1}, T_{S9}, A'=0, B'=1, T_{S13}, T_{S14}, K_{S3}, V_{SCS} MAX
2. MANDATORY IF SECOND STAGE IS REPRESENTED: K_{S2}, T_{S12}
3. OPTIONAL: T_{S7}, T_{S8}, T_{S10}, T_{S11}
4. $V_{SCS\ MIN} = -V_{SCS\ MAX}$

WSCC STABILITY PROGRAM STATIC VAR MODEL	
WSCC TYPES A-F	FIGURE 2
	APRIL 20, 1979
SUPPLEMENTARY CONTROL	

STATIC VAR MODEL

IF K_{SVS} IS ENTERED AS 0.0, THE MODEL REVERTS TO:

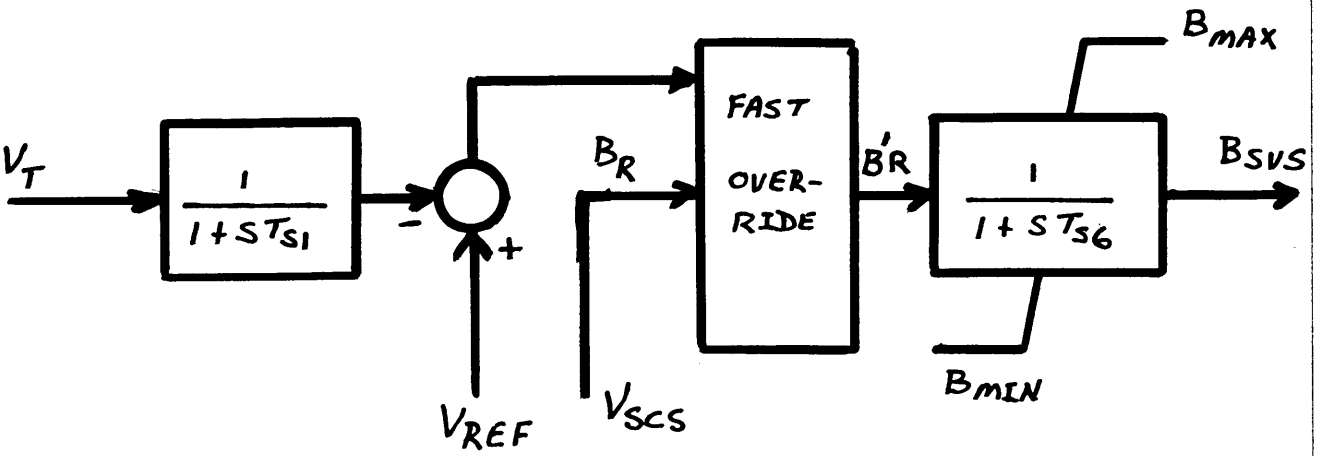

MANDATORY DATA:

V_{EMAX}, T_{S3}, $A=B=1$, B_{MAX}, B'_{MAX}, $B'_{MIN} = B_{MIN}$, T_{S6}

V_{EMAX} AND T_{S3} MUST BE ENTERED EVEN THOUGH THEY ARE NOT NEEDED. THEY MAY HAVE ANY POSITIVE VALUE.

SVS OUTPUT

THE PROGRAM TREATS THE SVS MODEL AS A MACHINE. OUTPUT IS OBTAINED BY USING A GENERATOR OUTPUT CARD (TYPE '6').

MACHINE OPTION TURBINE POWER	SVS OPTION BSVS IN PER UNIT
REGULATOR OUTPUT	V_{SCS} IN PER UNIT
SUPPLEMENTAL SIGNAL	SUPPLEMENTAL SIGNAL P, Δf, OR P_{ACC} P.U.
FIELD VOLTAGE	SUPPLEMENTAL SIGNAL V_T, Q, OR I P.U.

TRR 9/26/86

WSCC STABILITY PROGRAM

STATIC VAR SOURCE INPUT DATA (CARD 1)

COLUMN	
1	Card Type - V
2	Blank
3	Blank
4-15	Bus Name - Name of bus with static var source
16	Shunt Identification (Alphanumeric, Non-blank)
17-19	T_{S1} - Filter time constant in seconds
20-22	$V_{E\ MAX}$ - Maximum Voltage error in per unit
23-26	T_{S2} - First lead
27-30	T_{S3} - First lag
31	A - Lead identifier (must presently equal 1)
32	B - Lag identifier (must presently equal 1)
33-35	T_{S4} - Second lead
36-38	T_{S5} - Second lag
39-42	K_{SVS} - Continuous control gain
43-46	K_{SD} - Discontinuous control gain
47-50	B_{MAX} - Maximum admittance in per unit
51-54	B'_{MAX} - Maximum admittance for continuous control in per unit
55-58	B'_{MIN} - Minimum admittance for continuous control in per unit
59-62	B_{MIN} - Minimum admittance in per unit. Must presently equal B'_{MIN}
63-65	T_{S6} - Thyristor firing delay in seconds
66-68	DV - Voltage error for fast override in per unit Refer to block diagram, Figure 1
69-80	Remote Signal Bus Name - Bus being controlled. If blank then bus name specified in columns 4-15 will be used.

SPECIAL RULES

1. All inputs to the static var device and its supplementary control are in per unit. All gains should be specified in per unit and all time constants in seconds. One per unit voltage in kilovolts is the voltage specified in columns 12-15 of the bus name. One per unit power is 100 MVA. One per unit frequency is 60 hertz. Base currents and

admittances are defined from the base power and the base voltages.

2. A positive admittance is capacitive and provides megavars from the shunt to the network. A positive admittance increases the voltage on a bus.

3. Only one static var source can be located on a given bus. This bus cannot have a generator.

4. The bus shunt being used as a static var source must not be modified with switching operations.

5. A bus with a static var source can be deleted but must not be reinserted.

6. Lines connected to a bus with a static var source can be modified and deleted.

7. It may be necessary to use small electrical network time steps (one cycle or smaller) when representing static var devices. When in doubt compare the results of a full time step study with those of a half time step study. If the electrical network time step is reduced, also reduce the solution ratio to keep the same differential equation time step (see page 82).

8. Special attention should be exercised when using discontinuous control gain, K_{SD}. Choices for K_{SD} must be compatible with selected values of the other parameters to prevent undesirable performance.

9. The bus with the shunt var source should be represented in the power flow program as a type Q bus with zero megawatts generation. The megavar generation is from the shunt var source. The megavar limits can be calculated by multiplying the admittance limits by the square of the regulated voltage.

WSCC STABILITY PROGRAM

STATIC VAR SOURCE INPUT DATA (CARD 2)

COLUMN	
1	Card Type - W This card can be omitted if the static var device does not have Supplementary Control Signal. If not omitted, Card 1 must also be specified.
2	Supplementary Control Type (A, B, C) A - Accelerating power from a remote generator B - Power Flow across a line circuit C - Frequency at bus with static var source or any remote bus
3	Blank
4-15	Bus Name - Name of bus with static var source
16	Shunt Identification (Alphanumeric, Non-blank)
17-20	K_{S1} - First stage measuring circuit gain
21-24	T_{S7} - First stage input filter lag
25-28	T_{S8} - First stage lead
29-32	T_{S9} - First stage lag
33	A' - Lead identifier (must presently equal 0)
34	B' - Lag identifier (must presently equal 1)
35-38	T_{S13} - Lead
39-42	T_{S14} - Lag
43-46	K_{S3} - Gain
47-50	$V_{SCS\ MAX}$ - Maximum signal
54-79	Location of input signal for first stage: Type A - Accelerating power. Specify bus name in columns 54-65 and generator identity in column 66. Type B - Power flow from bus 1 to bus 2 at bus 1. Specify name of bus 1 in columns 54-65, name of bus 2 in columns 67-78 and circuit identity in column 79. If the flow on all circuits between bus 1 and bus 2 is to be used as input, specify an asterisk (*) in column 79. Type C - Change in frequency from a 60 hertz base. Specify bus name in columns 54-65.

WSCC STABILITY PROGRAM

STATIC VAR SOURCE INPUT DATA (CARD 3)

COLUMN	
1	Card Type - W This card can be omitted. If not omitted cards 1 and 2 must also be specified.
2	Supplementary Control Type (D, E, F) D - Voltage magnitude from the Remote Signal bus specified in columns 69-80 of Card 1. E - Megavar flow from system into static var source F - Current flow from system into static var source
3	Blank
4-15	Bus Name - Name of bus with static var source
16	Shunt Identification (Alphanumeric, Non-blank)
17-20	K_{S2} - Second stage measuring circuit gain
21-24	T_{S10} - Second stage input filter lag
25-28	T_{S11} - Second stage lead
29-32	T_{S12} - Second stage lag

WSCC STABILITY PROGRAM
INPUT FORMAT
POWER SYSTEM STABILIZER DATA

ORGANIZATION _____
PROJECT _____
SHEET ___ OF ___ DATE _____

	S	TYPE	NAME	KV	ID	K_{QV}	T_{QV}	K_{QS}	T_{QS}	T_Q	T_{Q1}	T'_{Q1}	T_{Q2}	T'_{Q2}	T_{Q3}	T'_{Q3}	V_S MAX	V CUTOFF	V_S LOW	REMOTE SIGNAL BUS NAME
COMMENTS	1	2	3 4 5 6 7 8 9 10 11	12 13 14 15	16	17 18 19 20	21 22 23 24	25 26 27 28	29 30 31 32	33 34 35 36	37 38 39 40	41 42 43 44	45 46 47 48	49 50 51 52	53 54 55 56	57 58 59 60	61 62 63 64	65 66 67 68	69	70 71 72 73 74 75 76 77 78 79 80
	S																			
	1	2	3 4 5 6 7 8 9 10 11	12 13 14 15	16	17 18 19 20	21 22 23 24	25 26 27 28	29 30 31 32	33 34 35 36	37 38 39 40	41 42 43 44	45 46 47 48	49 50 51 52	53 54 55 56	57 58 59 60	61 62 63 64	65 66 67 68	69	70 71 72 73 74 75 76 77 78 79 80

REVISED: 7-25-81

WSCC STABILITY PROGRAM

POWER SYSTEM STABILIZER INPUT DATA

COLUMN	
1	Card Type (S).
2	Power System Stabilizer Type (S,P,F).
4-15	Bus Name.
16	Machine Identification (alphanumeric).
17-20	K_{QV} - Voltage control gain in per unit.
21-23	T_{QV} - Voltage transducer time constant in seconds.
24-27	K_{QS} - Shaft slip, frequency or accelerating power control gain in per unit. For the type P power system stabilizer, this gain is dependent on the generator MVA base specified on the generator data card (page 25).
28-30	T_{QS} - Shaft slip, frequency or accelerating power transducer time constant in seconds.
31-34	T_Q - Washout time constant in seconds.
35-38	T_{Q1} - First lag time constant in seconds.
39-42	T'_{Q1} - First lead time constant in seconds.
43-46	T_{Q2} - Second lag time constant in seconds.
47-50	T'_{Q2} - Second lead time constant in seconds.
51-54	T_{Q3} - Third lag time constant in seconds.
55-58	T'_{Q3} - Third lead time constant in seconds.
59-62	$V_{S\ MAX}$ - Maximum PSS output in per unit.
63-66	V_{CUTOFF} - Change in generator terminal voltage at which PSS output is set to zero in per unit.
67-68	$V_{S\ LOW}$ - Used to determine $V_{S\ MIN}$ (See model on page 42).
69-80	REMOTE SIGNAL - Source of input signal if from a remote bus. Leave blank if the signal is from the machine terminal bus. This option is available for type F power system stabilizers only.

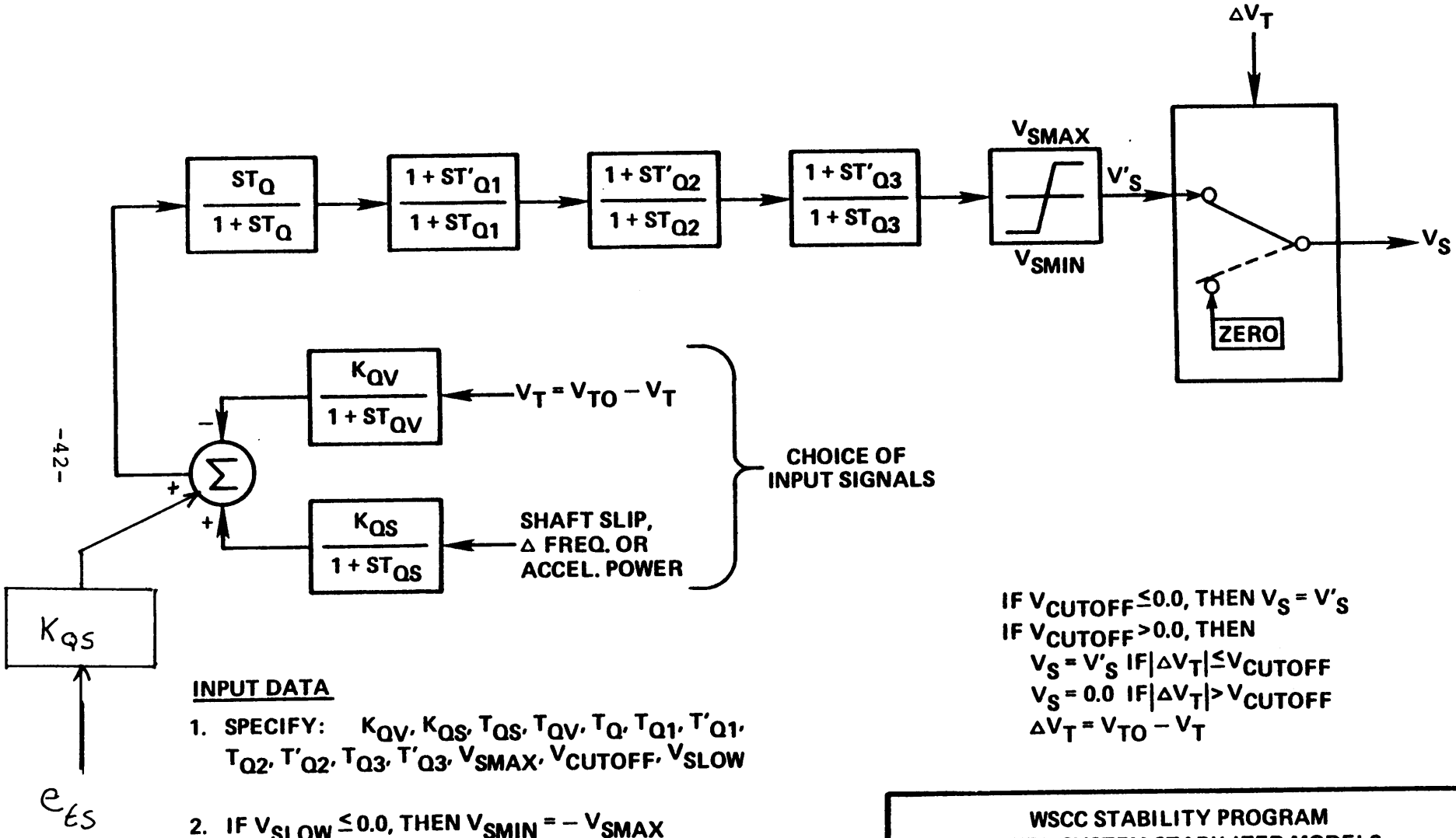

IF $V_{CUTOFF} \leq 0.0$, THEN $V_S = V'_S$
IF $V_{CUTOFF} > 0.0$, THEN
$V_S = V'_S$ IF $|\Delta V_T| \leq V_{CUTOFF}$
$V_S = 0.0$ IF $|\Delta V_T| > V_{CUTOFF}$
$\Delta V_T = V_{TO} - V_T$

INPUT DATA

1. SPECIFY: $K_{QV}, K_{QS}, T_{QS}, T_{QV}, T_Q, T_{Q1}, T'_{Q1}, T_{Q2}, T'_{Q2}, T_{Q3}, T'_{Q3}, V_{SMAX}, V_{CUTOFF}, V_{SLOW}$

2. IF $V_{SLOW} \leq 0.0$, THEN $V_{SMIN} = -V_{SMAX}$
   IF $V_{SLOW} > 0.0$, THEN $V_{SMIN} = -V_{SLOW}$

3. e_{ts} IS THE OUTPUT OF THE TRANSIENT STABILIZER

WSCC STABILITY PROGRAM POWER SYSTEM STABILIZER MODELS	
WSCC TYPES P, S, F	FIGURE 1
	JULY 1, 1981

TRR 5/20/87

WSCC STABILITY PROGRAM

POWER SYSTEM STABILIZER NOMENCLATURE

SYMBOL	DEFINITION
K_{QV}	PSS gain for voltage input signal.
K_{QS}	PSS gain for slip, frequency or accelerating power input signal.
T_Q	PSS washout time constant.
T'_{Q1}	Lead compensating time constant for first stage.
T'_{Q2}	Lead compensating time constant for second stage.
T'_{Q3}	Lead compensating time constant for third stage.
T_{Q1}	Lag compensating time constant for first stage.
T_{Q2}	Lag compensating time constant for second stage.
T_{Q3}	Lag compensating time constant for third stage.
T_{QV}	Transducer time constant for voltage input signal.
T_{QS}	Transducer time constant for slip, frequency or accelerating power input signal.
V_{SMAX}	Maximum PSS output.
V_S	PSS output.
V_{CUTOFF}	Change in generator terminal voltage at which output is cut to zero.
V_{SLOW}	Lower limit constant.

BONNEVILLE POWER ADMINISTRATION
FORTRAN CODING FORM

Requested by _____ Ext No. _____ Job code _____ Project _____ Sheet ____ of ____

TRANSIENT STABILIZER

| Statement No. | UOZ | | |

GOVERNOR-TURBINE SYSTEMS NOMENCLATURE

SYMBOL	DEFINITION
D_d	Transient Speed Droop Coefficient
F	Shaft Capacity ahead of the Reheater divided by the Total Shaft Capacity
F_{HP}	High Pressure Turbine Power Fraction
F_{IP}	Intermediate Pressure Turbine Power Fraction
F_{LP}	Low Pressure Turbine Power Fraction
F_{VHP}	Very High Pressure Turbine Power Fraction
K	$P_{MAX}/100\ R$
K'	$P_{MAX}/100$
K_1-K_8	General Model Parameters. See Block Diagrams.
P_{GV}	Power at Gate or Valve Outlet
P_M	Mechanical Power
P_{MAX}	Maximum Power Limit Imposed by Valve or Gate Travel
P_{MIN}	Minimum Power Limit Imposed by Valve or Gate Travel
P_O	Mechanical Power in Per Unit on a 100 MVA Base at Time Zero Minus
$\dot{P}_{DOWN}$	$(-VEL_{CLOSE})\ (P_{MAX}/100)$
$\dot{P}_{UP}$	$(VEL_{OPEN})\ (P_{MAX}/100)$
R	Per Unit Steady-State Droop
T_1-T_7	General Model Time Constants. See Block Diagrams.
T_{CH}	Steam Chest Time Constant
T_{CO}	Crossover Time Constant
T_{RH}	Reheat Time Constant
T_{RH1}	First Reheat Time Constant
T_{RH2}	Second Reheat Time Constant
T_G	Governor Response Time
T_P	Pilot Valve Time Constant
T_d	Dashpot Time Constant
T_W	Water Starting Time Constant
VEL_{OPEN}	Maximum Gate Opening Velocity in Per Unit Gate Per Second.
VEL_{CLOSE}	Minimum Gate Closing Velocity in Per Unit Gate Per Second.
V_T'	Compensated Generator Terminal Voltage. Refer to Excitation Systems Nomenclature, page 39.
D_H	Approximation for Amortisseur Damping
$\Delta\omega$	Per Unit Speed Deviation on a 60 Cycle Per Second Base $\Delta\omega = (\omega - 2\pi f_o) / 2\pi f_o$ where $f_o = 60$, ω = speed in radians per second

U. S. DEPARTMENT OF THE INTERIOR – BONNEVILLE POWER ADMINISTRATION

BPA STABILITY PROGRAM
WSCC INPUT FORMAT GOVERNOR DATA

SHEET _____ OF _____

CODE _____

DATE _____

CHG. CODE

BLANK = ADD NEW GOVERNOR
D = DELETE GOVERNOR
M = CHANGE DATA ENTERED ONLY

G	SUB TYPE	CHG CODE	NAME	KV	ID									
						P_{MAX}	R	T_1	T_2	T_3	T_4	T_5	F	
						P_{MAX}	R	T_G	T_P	T_D	$T_{W/2}$	VEL_{MIN}	VEL_{MAX}	D_D
					H	$P_{MAX\ HP}$	R_{HP}	T_{1HP}		T_{3HP}	T_{4HP}	$T_{5\ HP}$	F_{HP}	D_{HP}
					L	$P_{MAX\ LP}$	R_{LP}	T_{1LP}		T_{3LP}	T_{4LP}	$T_{5\ LP}$	F_{LP}	D_{LP}
1	2	3	4–11	12–15	16	17–22	23–27	28–32	33–37	38–42	43–47	48–52	53–57	58–62
G	G													

TYPE G–GENERAL PURPOSE GOVERNOR
TYPE H–HYDRO GOVERNOR
TYPE C–CROSS-COMPOUND, HIGH PRESSURE MACHINE
TYPE C–CROSS-COMPOUND, LOW PRESSURE MACHINE

63–80

WSCC STABILITY PROGRAM GOVERNOR MODELS

General Purpose

WSCC TYPE G

9-23-69 | FIG 1

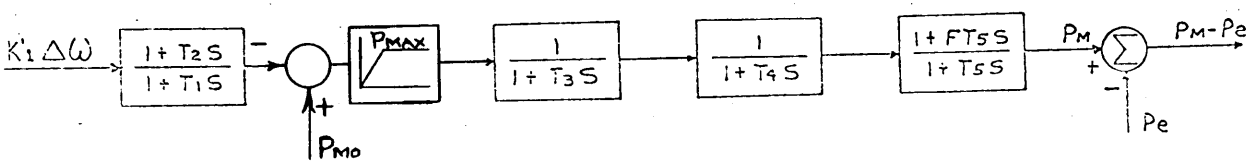

Input Data

T_1	F
T_2	P_{MAX}
T_3	R
T_4	
T_5	

(K'_1 derived from frequency & R)

SYMBOL	DEFINITION
D_d	Temporary speed droop
F	=-2 for hydro, or $\frac{\text{Shaft capacity ahead of Reheater}}{\text{Total Shaft Capacity}}$ for steam.
K	$\frac{P_{MAX}}{f\ R\ (\text{MVA Base})}$, f = 60
K_1	$\frac{\text{Machine Capacity}}{f\ R\ (\text{MVA Base})}$, f = 60
K'_1	K_1 (MVA Base)/Quadrature Axis Velocity, hz
K_2	Machine Capacity/(f*(MVA Base)) or K_1*R
P_e	Machine electrical output
P_{MAX}	Maximum power output of turbine, mw
P_{MO}	Initial mechanical torque, mw
R	Steady state droop
T_1	Control time
T_2	Hydro reset time, Zero if steam unit
T_3	Servo time constant or hydro gate time constant
T_4	Steam valve bowl time constant, Zero if hydro unit
T_5	1/2 Hydro water hammer time constant or steam reheat time con
T_G	Governor response time
T_P	Pilot valve time constant
T_d	Dashpot time constant, hydro governor, enter under T_3
T_W	Water starting time constant
VEL_{MAX}	Maximum Gate Velocity per unit per second
VEL_{MIN}	Minimum Gate Velocity per unit per second
DH_{HP}	**Approximation for Amortisseur damping, high pressure unit**
DH_{LP}	**Approximation for Amortisseur damping, low pressure unit**
$\Delta\omega$	**Change of speed, radians per second**

BPA 820 REV. MARCH 1974

WSCC STABILITY PROGRAM
INPUT FORMAT
GOVERNOR & TURBINE DATA
(GOVERNOR TYPES H & C)

ORGANIZATION _____
PROJECT _____
SHEET ____ OF ____ DATE _____

	G	TYPE	NAME	KV	ID	PMAX	R	T_G	T_P	T_d	$T_W/2$	VEL CLOSE	VEL OPEN	D_d	TYPE H HYDRO GOVERNOR
						PMAX	R	T_1		T_3	T_4	T_5	F	DH	TYPE C CROSS-COMPOUND GOVERNOR
COMMENTS	1	2	3–15	12–15	16	17–22	23–27	28–32	33–37	38–42	43–47	48–52	53–57	58–62	63–80
	G	H													

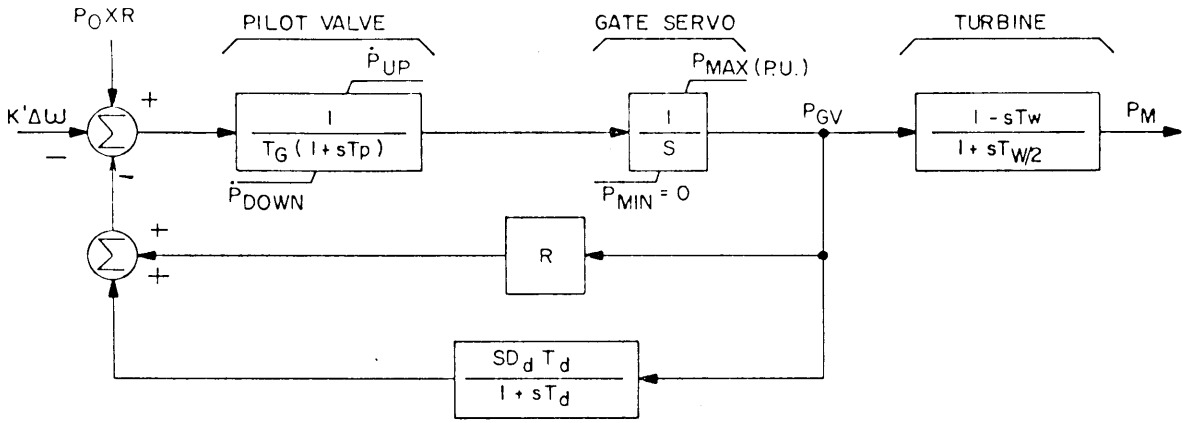

INPUT DATA

1. SPECIFY: P_{MAX}, R, T_G, T_P, T_d, $T_{W/2}$, VEL_{CLOSE}, VEL_{OPEN}, D_d
2. THE PROGRAM CALCULATES
   - $K' = P_{MAX}$ IN PER UNIT
   - $T_W = 2 \times T_{W/2}$
   - P_{MAX} IN PER UNIT = $P_{MAX}/100$
   - $\dot{P}_{UP} = (VEL_{OPEN})(P_{MAX}$ IN PER UNIT$)$
   - $\dot{P}_{DOWN} = (-VEL_{CLOSE})(P_{MAX}$ IN PER UNIT$)$

WSCC STABILITY PROGRAM GOVERNOR - TURBINE MODELS	
WSCC TYPE H	FIGURE 1 JULY 3,1
HYDRO-MECHANICAL GOVERNOR-TURBINE	

GOVERNOR AND TURBINE INPUT DATA

GOVERNOR TYPES H & C

COLUMN	
1	Card Type - G
2	Governor Type (H or C)
3	Blank
4-15	Bus Name
16	Machine Identification (alphanumeric)
17-22	P_{MAX} - Maximum Power Output of Turbine in Megawatts
23-27	R - Per Unit Steady-State Droop
28-32	T_1 - Control Time (Type C Governor) T_G - Governor Response Time (Type H Governor)
33-37	T_P - Pilot Valve Time Constant (Type H Governor)
38-42	T_3 - Servo Time Constant (Type C Governor) T_d - Dashpot Time Constant (Type H Governor)
43-47	T_4 - Steam Valve Bowl Time Constant (Type C Governor) $T_{W/2}$ - Half of the Water Starting Time Constant (Type H Governor)
48-52	T_5 - Steam Reheat Time Constant (Type C Governor) VEL_{CLOSE} - Maximum Gate Closing Velocity in per unit gate per second where one per unit gate is equal to P_{MAX}. This must be a positive number. (Type H Governor)
53-57	F - Shaft Capacity Ahead of the Reheater divided by the Total Shaft Capacity (Type C Governor) VEL_{OPEN} - Maximum Gate Opening Velocity in per unit gate per second. This must be a positive number. (Type H Governor)
58-62	D_H - Approximation for Amortisseur Damping (Type C Governor) D_d - Temporary Speed Droop (Type H Governor)
63-80	Blank

WSCC STABILITY PROGRAM
INPUT FORMAT
GOVERNOR & TURBINE DATA
(GOVERNOR TYPES H & C)

ORGANIZATION _____
PROJECT _____
SHEET ____ OF ____ DATE _____

	G	TYPE	NAME	KV	ID	PMAX	R	T_G	T_P	T_d	$T_W/2$	VEL CLOSE	VEL OPEN	D_d	TYPE H HYDRO GOVERNOR
						PMAX	R	T_1		T_3	T_4	T_5	F	DH	TYPE C CROSS-COMPOUND GOVERNOR
COMMENTS	1	2	3–11	12–15	16	17–22	23–27	28–32	33–37	38–42	43–47	48–52	53–57	58–62	63–80
	G	C													

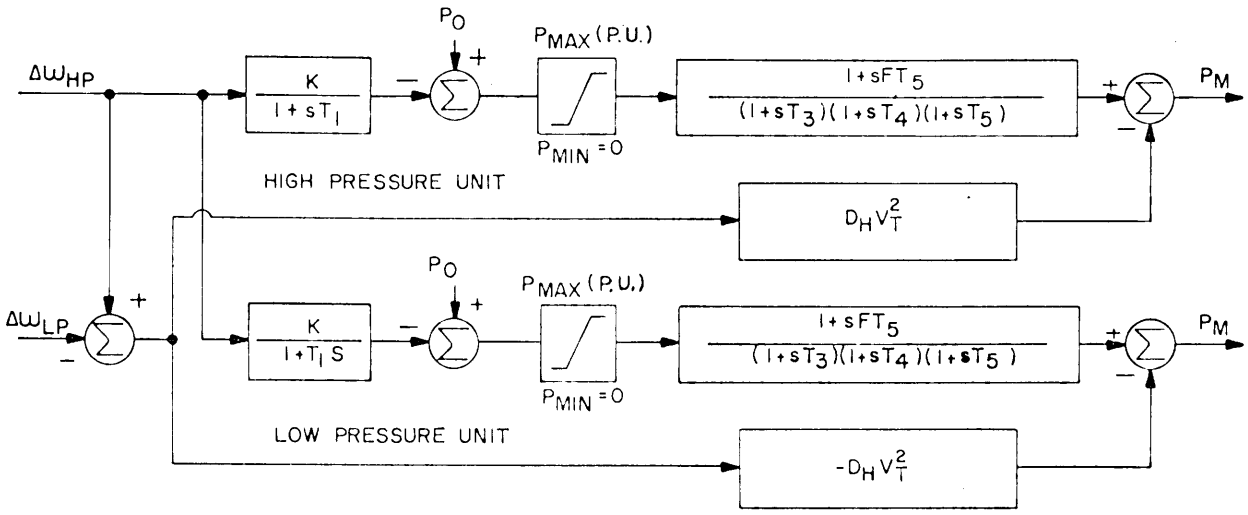

INPUT DATA

1. TWO DATA CARDS ARE REQUIRED - ONE FOR THE HIGH PRESSURE UNIT AND ANOTHER FOR THE LOW PRESSURE UNIT.
2. SPECIFY THE FOLLOWING DATA FOR EACH UNIT : P_{MAX}, R, T_1, T_3, T_4, T_5, F, AND DH.
3. THE PROGRAM CALCULATES $K = P_{MAX}/100R$
4. THE APPROXIMATION FOR AMORTISSEUR DAMPING CAN BE CALCULATED AS FOLLOWS :

$$DH = 1/2 \left[\frac{(X'_d - X''_d)\, T''_{do}}{(X'_d + X_T)2} + \frac{(X_q - X''_q)\, T''_{qo}}{(X_q + X_T)2} \right]$$

WHERE X_T IS THE GENERATOR TRANSFORMER IMPEDANCE

5. P_{MAX} IN PER UNIT = $P_{MAX}/100$.

WSCC STABILITY PROGRAM
GOVERNOR - TURBINE MODELS

WSCC TYPE C — FIGURE 2 — JULY 3, 197

CROSS COMPOUND
GOVERNOR-TURBINE

GOVERNOR AND TURBINE INPUT DATA

GOVERNOR TYPES H & C

COLUMN	
1	Card Type - G
2	Governor Type (H or C)
3	Blank
4-15	Bus Name
16	Machine Identification (alphanumeric)
17-22	P_{MAX} - Maximum Power Output of Turbine in Megawatts
23-27	R - Per Unit Steady-State Droop
28-32	T_1 - Control Time (Type C Governor) T_G - Governor Response Time (Type H Governor)
33-37	T_P - Pilot Valve Time Constant (Type H Governor)
38-42	T_3 - Servo Time Constant (Type C Governor) T_d - Dashpot Time Constant (Type H Governor)
43-47	T_4 - Steam Valve Bowl Time Constant (Type C Governor) $T_{w/2}$ - Half of the Water Starting Time Constant (Type H Governor)
48-52	T_5 - Steam Reheat Time Constant (Type C Governor) VEL_{CLOSE} - Maximum Gate Closing Velocity in per unit gate per second where one per unit gate is equal to P_{MAX}. This must be a positive number. (Type H Governor)
53-57	F - Shaft Capacity Ahead of the Reheater divided by the Total Shaft Capacity (Type C Governor)
	VEL_{OPEN} - Maximum Gate Opening Velocity in per unit gate per second. This must be a positive number. (Type H Governor)
58-62	D_H - Approximation for Amortisseur Damping (Type C Governor) D_d - Temporary Speed Droop (Type H Governor)
63-80	Blank

WSCC STABILITY PROGRAM
INPUT FORMAT
GOVERNOR DATA
(GOVERNOR TYPES S&W)

ORGANIZATION _____
PROJECT _____
SHEET ____ OF ____ DATE _____

	G	TYPE	NAME	KV	ID	PMAX	PMIN	R	T_1	T_2	T_3	VEL OPEN	VEL CLOSE	TYPE S STEAM GOVERNOR
						PMAX	PMIN	R	T_1	T_2	T_3			TYPE W HYDRO GOVERNOR
COMMENTS .	1	2	3 4 5 6 7 8 9 10 11	12 13 14 15	16	17 18 19 20 21 22	23 24 25 26 27 28	29 30 31 32 33	34 35 36 37 38	39 40 41 42 43	44 45 46 47 48	49 50 51 52 53 54	55 56 57 58 59 60	61 62 63 64 65 66 67 68 69 70 71 72 73 74 75 76 77 78 79 80
	G	S												

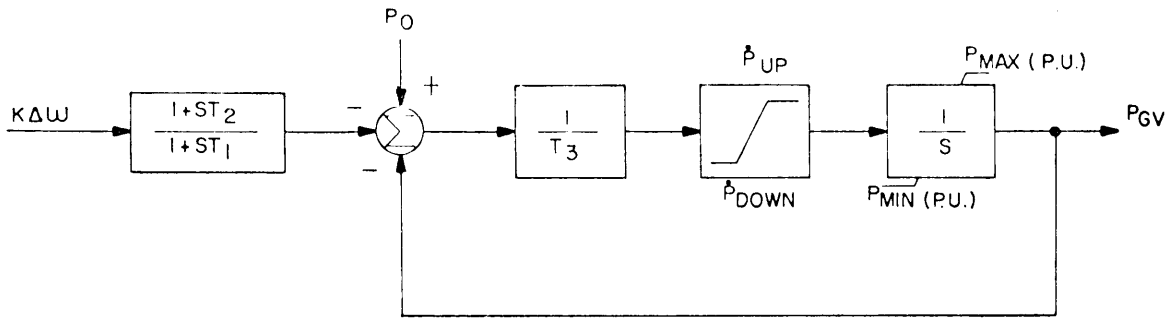

INPUT DATA

1. SPECIFY: P_{MAX}, P_{MIN}, R, T_1, T_2, T_3, VEL_{OPEN}, VEL_{CLOSE}.
2. THE PROGRAM CALCULATES:
   $K = P_{MAX}$ IN PER UNIT/R
   $\dot{P}_{UP} = (VEL_{OPEN})(P_{MAX}$ IN PER UNIT)
   $\dot{P}_{DOWN} = (-VEL_{CLOSE})(P_{MAX}$ IN PER UNIT)
   P_{MAX} IN PER UNIT = $P_{MAX}/100$
   P_{MIN} IN PER UNIT = $P_{MIN}/100$

WSCC STABILITY PROGRAM GOVERNOR - TURBINE MODELS	
WSCC TYPE S	FIGURE 3
	JULY 3, 1974
STEAM SYSTEM GOVERNOR	

GOVERNOR INPUT DATA

FOR GOVERNOR TYPES S AND W

COLUMN	
1	Card Type - G
2	Governor Type (S or W)
3	Blank
4-15	Bus Name
16	Machine Identification (alphanumeric)
17-22	P_{MAX} - Maximum Power Output of Turbine in Megawatts
23-28	P_{MIN} - Minimum Power Output of Turbine in Megawatts
29-33	R - Steady-State Droop in Per Unit
34-38	T_1 - See Block Diagram
39-43	T_2 - See Block Diagram
44-48	T_3 - See Block Diagram
49-54	VEL_{OPEN} - Maximum Gate Opening Velocity in per unit gate per second. This must be a positive number. (Type S Governor)
55-60	VEL_{CLOSE} - Maximum Gate Closing Velocity in per unit gate per second. This must be a positive number. (Type S Governor)
61-80	Blank

The user must also specify turbine data for governor types S and W. The format for the turbine data is given on pages 48 and 48.1. A type A,B,C,D,E, or F turbine must be specified for a type S governor. A type W turbine must be specified for a type W governor.

WSCC STABILITY PROGRAM
INPUT FORMAT
GOVERNOR DATA
(GOVERNOR TYPES S&W)

ORGANIZATION _____
PROJECT _____
SHEET ____ OF ____ DATE _____

	G	TYPE	NAME	KV	ID	PMAX	PMIN	R	T_1	T_2	T_3	VEL OPEN	VEL CLOSE	TYPE S STEAM GOVERNOR
						PMAX	PMIN	R	T_1	T_2	T_3			TYPE W HYDRO GOVERNOR
COMMENTS .	1	2	3 4 5 6 7 8 9 10 11	12 13 14 15	16	17 18 19 20 21 22	23 24 25 26 27 28	29 30 31 32 33	34 35 36 37 38	39 40 41 42 43	44 45 46 47 48	49 50 51 52 53 54	55 56 57 58 59 60	61 62 63 64 65 66 67 68 69 70 71 72 73 74 75 76 77 78 79 80
	G	W												

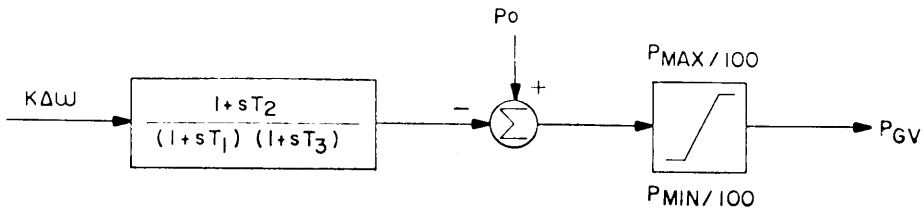

INPUT DATA

1. SPECIFY: P_{MAX}, P_{MIN}, R, T_1, T_2, T_3
2. THE PROGRAM CALCULATES $K = P_{MAX}/100R$

WSCC STABILITY PROGRAM GOVERNOR-TURBINE MODELS	
WSCC TYPE W	FIGURE 4
	JULY 3, 1974
HYDRO GOVERNOR SYSTEM	

GOVERNOR INPUT DATA

FOR GOVERNOR TYPES S AND W

COLUMN	
1	Card Type - G
2	Governor Type (S or W)
3	Blank
4-15	Bus Name
16	Machine Identification (alphanumeric)
17-22	P_{MAX} - Maximum Power Output of Turbine in Megawatts
23-28	P_{MIN} - Minimum Power Output of Turbine in Megawatts
29-33	R - Steady-State Droop in Per Unit
34-38	T_1 - See Block Diagram
39-43	T_2 - See Block Diagram
44-48	T_3 - See Block Diagram
49-54	VEL_{OPEN} - Maximum Gate Opening Velocity in per unit gate per second. This must be a positive number. (Type S Governor)
55-60	VEL_{CLOSE} - Maximum Gate Closing Velocity in per unit gate per second. This must be a positive number. (Type S Governor)
61-80	Blank

The user must also specify turbine data for governor types S and W. The format for the turbine data is given on pages 48 and 48.1. A type A,B,C,D,E, or F turbine must be specified for a type S governor. A type W turbine must be specified for a type W governor.

WSCC STABILITY PROGRAM
INPUT FORMAT
TURBINE DATA
(GOVERNOR TYPES S&W)

ORGANIZATION _____
PROJECT _____
SHEET ____ OF ____ DATE _____

	T	TYPE		NAME	KV	ID	T_4	K_1	K_2	T_5	K_3	K_4	T_6	K_5	K_6	T_7	K_7	K_8	
COMMENTS	1	2	3	4 5 6 7 8 9 10 11	12 13 14 15	16	17 18 19 20 21	22 23 24 25	26 27 28 29 30 31	32 33 34 35 36	37 38 39 40 41	42 43 44 45 46	47 48 49 50 51	52 53 54 55 56	57 58 59 60 61	62 63 64 65 66	67 68 69 70 71	72 73 74 75 76	77 78 79 80
	T	A																	

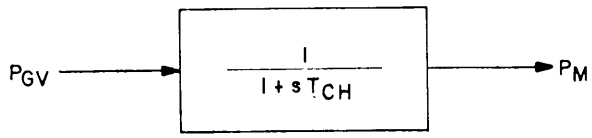

TURBINE INPUT DATA
FOR GOVERNOR TYPES S AND W

COLUMN	
1	Card Type - T
2	Turbine Type (A,B,C,D,E,F, or W)*
3	Blank
4-15	Bus Name
16	Machine Identification (alphanumeric)
17-76	See Table Below
77-80	Blank

INPUT DATA
SPECIFY: $T_4 = T_{CH}$, $K_1 = 1.0$

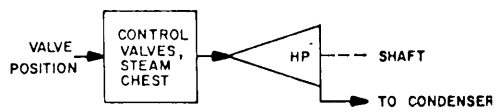

WSCC STABILITY PROGRAM GOVERNOR - TURBINE MODELS	
WSCC TYPE A	FIGURE 5 JUNE 10, 1974
NONREHEAT TURBINE	

INPUT ITEM FOR TURBINE TYPE**

COLUMN	FIELD	A*	B	C	D	E	F	W
17-21	T_4	T_{CH}	T_{CH}	T_{CH}	T_{CH}	T_{CH}	T_{CH}	0.0
22-26	K_1	1.0	F_{HP}	F_{VHP}	F_{HP}	F_{HP}	F_{VHP}	-2.0
27-31	K_2	0.0	0.0	0.0	0.0	0.0	0.0	0.0
32-36	T_5	0.0	T_{RH}	T_{RH1}	T_{RH}	T_{RH}	T_{RH1}	TW/2
37-41	K_3	0.0	F_{IP}	F_{HP}	0.0	F_{IP}	0.0	3.0
42-46	K_4	0.0	0.0	0.0	F_{IP}	0.0	F_{HP}	0.0
47-51	T_6	0.0	T_{CO}	T_{RH2}	T_{CO}	T_{CO}	T_{RH2}	0.0
52-56	K_5	0.0	F_{LP}	F_{IP}	$.5F_{LP}$	0.0	$.5F_{IP}$	0.0
57-61	K_6	0.0	0.0	0.0	$.5F_{LP}$	F_{LP}	$.5F_{IP}$	0.0
62-66	T_7	0.0	0.0	T_{CO}	0.0	0.0	T_{CO}	0.0
67-71	K_7	0.0	0.0	F_{LP}	0.0	0.0	$.5F_{LP}$	0.0
72-76	K_8	0.0	0.0	0.0	0.0	0.0	$.5F_{LP}$	0.0

* The letter codes refer to the following system configurations: A - Non-reheat; B - Tandem compound, single reheat; C - Tandem compound, double reheat; D - Cross compound, single reheat; E - Cross compound, single reheat; F - Cross compound, double reheat; W - Hydro.

WSCC STABILITY PROGRAM
INPUT FORMAT
TURBINE DATA
(GOVERNOR TYPES S&W)

ORGANIZATION _____
PROJECT _____
SHEET ____ OF ____ DATE _____

	T	TYPE		NAME	KV	ID	T_4	K_1	K_2	T_5	K_3	K_4	T_6	K_5	K_6	T_7	K_7	K_8	
COMMENTS	1	2	3	4 5 6 7 8 9 10 11	12 13 14 15	16	17 18 19 20 21	22 23 24 25 26	27 28 29 30 31	32 33 34 35 36	37 38 39 40 41	42 43 44 45 46	47 48 49 50 51	52 53 54 55 56	57 58 59 60 61	62 63 64 65 66	67 68 69 70 71	72 73 74 75 76	77 78 79 80
	T	B																	

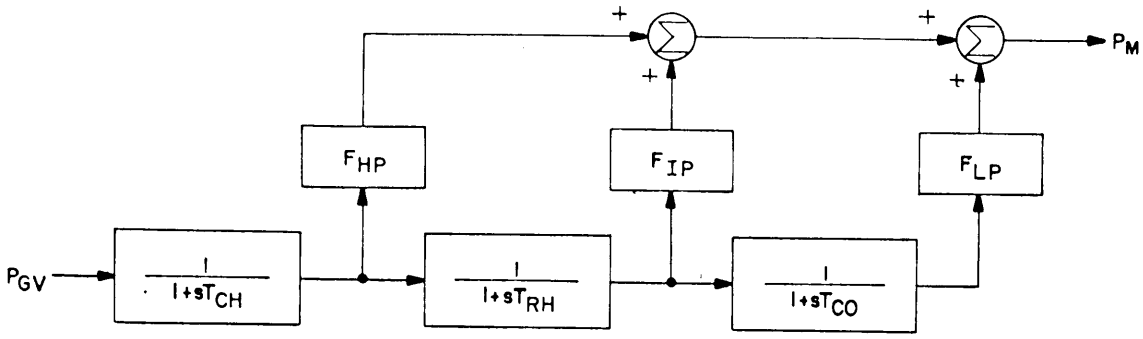

TURBINE INPUT DATA
FOR GOVERNOR TYPES S AND W

COLUMN	
1	Card Type - T
2	Turbine Type (A,B,C,D,E,F, or W)*
3	Blank
4-15	Bus Name
16	Machine Identification (alphanumeric)
17-76	See Table Below
77-80	Blank

INPUT ITEM FOR TURBINE TYPE**

COLUMN	FIELD	A*	B	C	D	E	F	W
17-21	T_4	T_{CH}	T_{CH}	T_{CH}	T_{CH}	T_{CH}	T_{CH}	0.0
22-26	K_1	1.0	F_{HP}	F_{VHP}	F_{HP}	F_{HP}	F_{VHP}	-2.0
27-31	K_2	0.0	0.0	0.0	0.0	0.0	0.0	0.0
32-36	T_5	0.0	T_{RH}	T_{RH1}	T_{RH}	T_{RH}	T_{RH1}	TW/2
37-41	K_3	0.0	F_{IP}	F_{HP}	0.0	F_{IP}	0.0	3.0
42-46	K_4	0.0	0.0	0.0	F_{IP}	0.0	F_{HP}	0.0
47-51	T_6	0.0	T_{CO}	T_{RH2}	T_{CO}	T_{CO}	T_{RH2}	0.0
52-56	K_5	0.0	F_{LP}	F_{IP}	$.5F_{LP}$	0.0	$.5F_{IP}$	0.0
57-61	K_6	0.0	0.0	0.0	$.5F_{LP}$	F_{LP}	$.5F_{IP}$	0.0
62-66	T_7	0.0	0.0	T_{CO}	0.0	0.0	T_{CO}	0.0
67-71	K_7	0.0	0.0	F_{LP}	0.0	0.0	$.5F_{LP}$	0.0
72-76	K_8	0.0	0.0	0.0	0.0	0.0	$.5F_{LP}$	0.0

* The letter codes refer to the following system configurations: A - Non-reheat; B - Tandem compound, single reheat; C - Tandem compound, double reheat; D - Cross compound, single reheat; E - Cross compound, single reheat; F - Cross compound, double reheat; W - Hydro.

INPUT DATA

SPECIFY: $T_4 = T_{CH}$, $K_1 = F_{HP}$, $T_5 = T_{RH}$, $K_3 = F_{IP}$, $T_6 = T_{CO}$, $K_5 = F_{LP}$

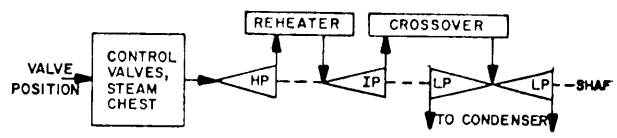

WSCC STABILITY PROGRAM
GOVERNOR - TURBINE MODELS

WSCC TYPE B — FIGURE 6 — JUNE 10, 1974

TANDEM COMPOUND
SINGLE REHEAT TURBINE

WSCC STABILITY PROGRAM
INPUT FORMAT
TURBINE DATA
(GOVERNOR TYPES S&W)

ORGANIZATION _____
PROJECT _____
SHEET ___ OF ___ DATE _____

	T	TYPE		NAME	KV	ID	T_4	K_1	K_2	T_5	K_3	K_4	T_6	K_5	K_6	T_7	K_7	K_8	
COMMENTS	1	2	3	4 5 6 7 8 9 10 11	12 13 14 15	16	17 18 19 20 21	22 23 24 25 26	27 28 29 30 31	32 33 34 35 36	37 38 39 40 41	42 43 44 45 46	47 48 49 50 51	52 53 54 55 56	57 58 59 60 61	62 63 64 65 66	67 68 69 70 71	72 73 74 75 76	77 78 79 80
	T	C																	

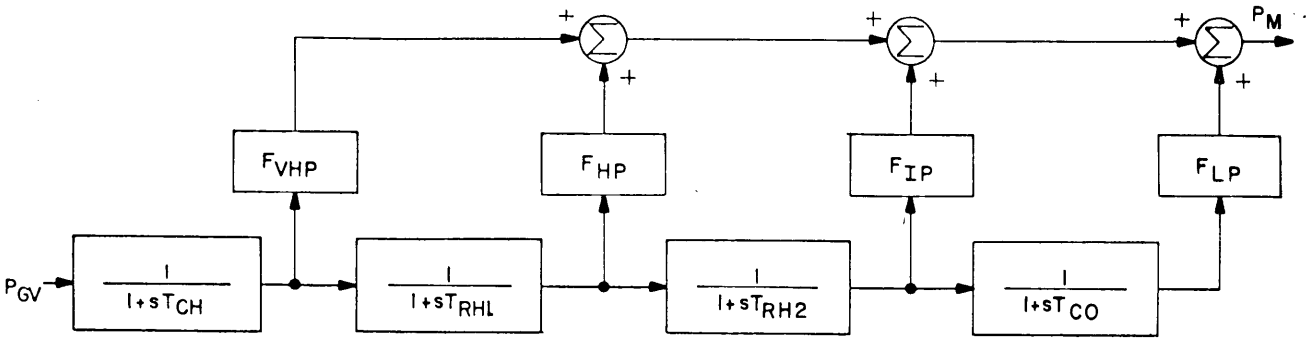

TURBINE INPUT DATA
FOR GOVERNOR TYPES S AND W

COLUMN	
1	Card Type - T
2	Turbine Type (A,B,C,D,E,F, or W)*
3	Blank
4-15	Bus Name
16	Machine Identification (alphanumeric)
17-76	See Table Below
77-80	Blank

INPUT ITEM FOR TURBINE TYPE**

COLUMN	FIELD	A*	B	C	D	E	F	W
17-21	T_4	T_{CH}	T_{CH}	T_{CH}	T_{CH}	T_{CH}	T_{CH}	0.0
22-26	K_1	1.0	F_{HP}	F_{VHP}	F_{HP}	F_{HP}	F_{VHP}	-2.0
27-31	K_2	0.0	0.0	0.0	0.0	0.0	0.0	0.0
32-36	T_5	0.0	T_{RH}	T_{RH1}	T_{RH}	T_{RH}	T_{RH1}	TW/2
37-41	K_3	0.0	F_{IP}	F_{HP}	0.0	F_{IP}	0.0	3.0
42-46	K_4	0.0	0.0	0.0	F_{IP}	0.0	F_{HP}	0.0
47-51	T_6	0.0	T_{CO}	T_{RH2}	T_{CO}	T_{CO}	T_{RH2}	0.0
52-56	K_5	0.0	F_{LP}	F_{IP}	$.5F_{LP}$	0.0	$.5F_{IP}$	0.0
57-61	K_6	0.0	0.0	0.0	$.5F_{LP}$	F_{LP}	$.5F_{IP}$	0.0
62-66	T_7	0.0	0.0	T_{CO}	0.0	0.0	T_{CO}	0.0
67-71	K_7	0.0	0.0	F_{LP}	0.0	0.0	$.5F_{LP}$	0.0
72-76	K_8	0.0	0.0	0.0	0.0	0.0	$.5F_{LP}$	0.0

* The letter codes refer to the following system configurations: A - Non-reheat; B - Tandem compound, single reheat; C - Tandem compound, double reheat; D - Cross compound, single reheat; E - Cross compound, single reheat; F - Cross compound, double reheat; W - Hydro.

INPUT DATA

SPECIFY: $T_4 = T_{CH}$, $K_1 = F_{VHP}$, $T_5 = T_{RH1}$, $K_3 = F_{HP}$, $T_6 = T_{RH2}$, $K_5 = F_{IP}$, $T_7 = T_{CO}$, $K_7 = F_{LP}$

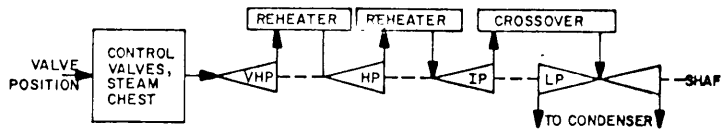

WSCC STABILITY PROGRAM
GOVERNOR-TURBINE MODELS

WSCC TYPE C — FIGURE 7 — JUNE 12, 1974

TANDEM COMPOUND
DOUBLE REHEAT TURBINE

WSCC STABILITY PROGRAM
INPUT FORMAT
TURBINE DATA
(GOVERNOR TYPES S&W)

ORGANIZATION _____
PROJECT _____
SHEET ___ OF ___ DATE _____

	T	TYPE		NAME	KV	ID	T_4	K_1	K_2	T_5	K_3	K_4	T_6	K_5	K_6	T_7	K_7	K_8	
COMMENTS	1	2	3	4 5 6 7 8 9 10 11	12 13 14 15	16	17 18 19 20 21	22 23 24 25 26	27 28 29 30 31	32 33 34 35 36	37 38 39 40 41	42 43 44 45 46	47 48 49 50 51	52 53 54 55 56	57 58 59 60 61	62 63 64 65 66	67 68 69 70 71	72 73 74 75 76	77 78 79 80
	T	D																	

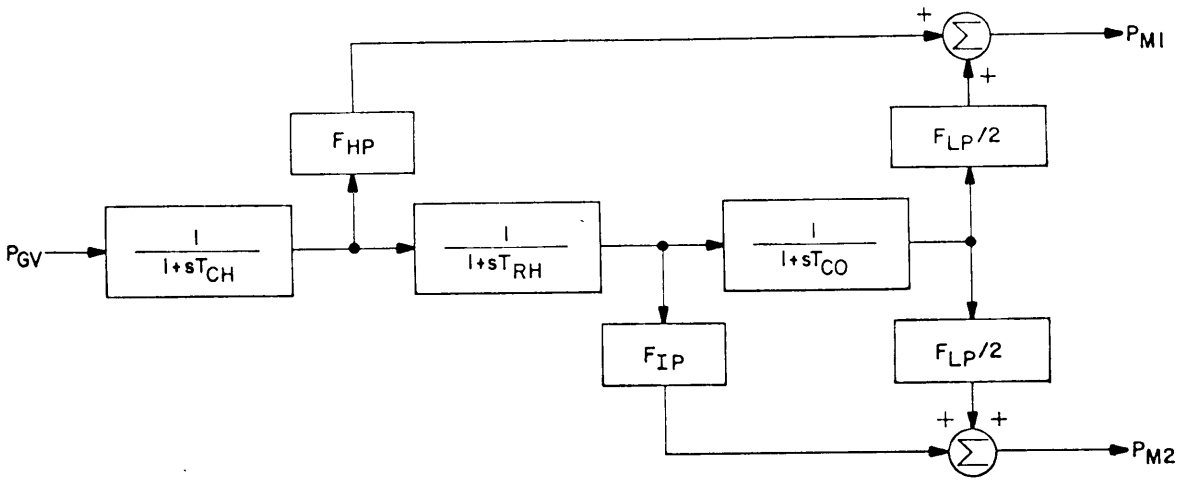

INPUT DATA

SPECIFY: $T_4 = T_{CH}$, $K_1 = F_{HP}$, $T_5 = T_{RH}$, $K_4 = F_{IP}$, $T_6 = T_{CO}$, $K_5 = .5F_{LP}$, $K_6 = .5F_{LP}$

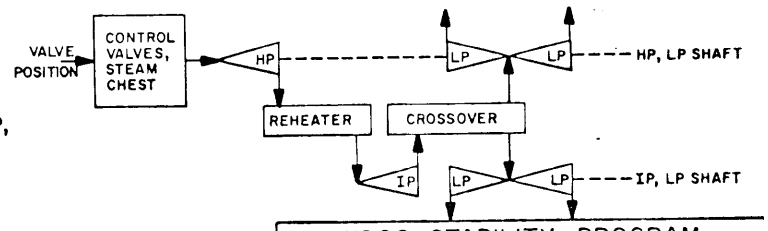

WSCC STABILITY PROGRAM
GOVERNOR - TURBINE MODELS

WSCC TYPE D | FIGURE 8 | JUNE 12, 1974

CROSS COMPOUND
SINGLE REHEAT TURBINE

TURBINE INPUT DATA
FOR GOVERNOR TYPES S AND W

COLUMN	
1	Card Type - T
2	Turbine Type (A,B,C,D,E,F, or W)*
3	Blank
4-15	Bus Name
16	Machine Identification (alphanumeric)
17-76	See Table Below
77-80	Blank

INPUT ITEM FOR TURBINE TYPE**

COLUMN	FIELD	A*	B	C	D	E	F	W
17-21	T_4	T_{CH}	T_{CH}	T_{CH}	T_{CH}	T_{CH}	T_{CH}	0.0
22-26	K_1	1.0	F_{HP}	F_{VHP}	F_{HP}	F_{HP}	F_{VHP}	-2.0
27-31	K_2	0.0	0.0	0.0	0.0	0.0	0.0	0.0
32-36	T_5	0.0	T_{RH}	T_{RH1}	T_{RH}	T_{RH}	T_{RH1}	TW/2
37-41	K_3	0.0	F_{IP}	F_{HP}	0.0	F_{IP}	0.0	3.0
42-46	K_4	0.0	0.0	0.0	F_{IP}	0.0	F_{HP}	0.0
47-51	T_6	0.0	T_{CO}	T_{RH2}	T_{CO}	T_{CO}	T_{RH2}	0.0
52-56	K_5	0.0	F_{LP}	F_{IP}	$.5F_{LP}$	0.0	$.5F_{IP}$	0.0
57-61	K_6	0.0	0.0	0.0	$.5F_{LP}$	F_{LP}	$.5F_{IP}$	0.0
62-66	T_7	0.0	0.0	T_{CO}	0.0	0.0	T_{CO}	0.0
67-71	K_7	0.0	0.0	F_{LP}	0.0	0.0	$.5F_{LP}$	0.0
72-76	K_8	0.0	0.0	0.0	0.0	0.0	$.5F_{LP}$	0.0

* The letter codes refer to the following system configurations: A - Non-reheat; B - Tandem compound, single reheat; C - Tandem compound, double reheat; D - Cross compound, single reheat; E - Cross compound, single reheat; F - Cross compound, double reheat; W - Hydro.

WSCC STABILITY PROGRAM
INPUT FORMAT
TURBINE DATA
(GOVERNOR TYPES S&W)

ORGANIZATION _____
PROJECT _____
SHEET ____ OF ____ DATE _____

	T	TYPE	NAME	KV	ID	T_4	K_1	K_2	T_5	K_3	K_4	T_6	K_5	K_6	T_7	K_7	K_8	
COMMENTS	1	2	3 4 5 6 7 8 9 10 11	12 13 14 15	16	17 18 19 20 21	22 23 24 25 26	27 28 29 30 31	32 33 34 35 36	37 38 39 40 41	42 43 44 45 46	47 48 49 50 51	52 53 54 55 56	57 58 59 60 61	62 63 64 65 66	67 68 69 70 71	72 73 74 75 76	77 78 79 80
	T	E																

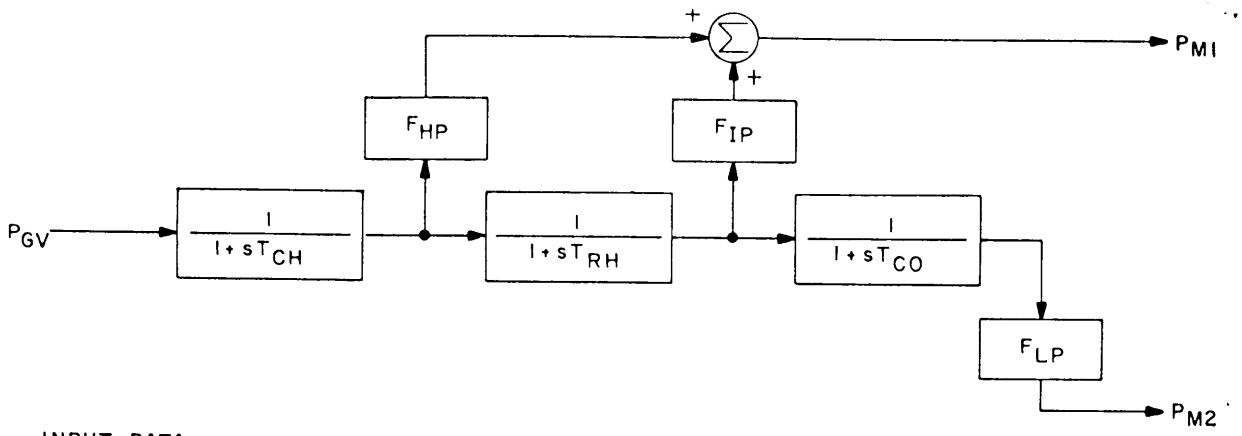

INPUT DATA

SPECIFY: $T_4 = T_{CH}$, $K_1 = F_{HP}$, $T_5 = T_{RH}$,
$K_3 = F_{IP}$, $T_6 = T_{CO}$, $K_6 = F_{LP}$

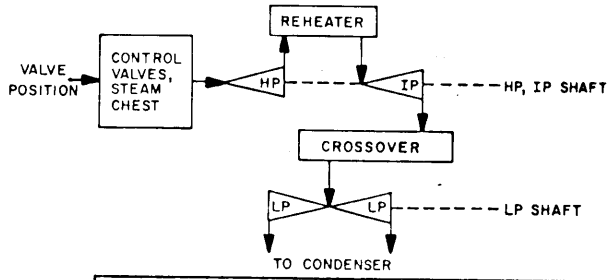

WSCC STABILITY PROGRAM
GOVERNOR - TURBINE MODELS

WSCC TYPE E — FIGURE 9 — JUNE 12, 1974

CROSS COMPOUND
SINGLE REHEAT TURBINE

TURBINE INPUT DATA

FOR GOVERNOR TYPES S AND W

COLUMN	
1	Card Type - T
2	Turbine Type (A,B,C,D,E,F, or W)*
3	Blank
4-15	Bus Name
16	Machine Identification (alphanumeric)
17-76	See Table Below
77-80	Blank

INPUT ITEM FOR TURBINE TYPE**

COLUMN	FIELD	A*	B	C	D	E	F	W
17-21	T_4	T_{CH}	T_{CH}	T_{CH}	T_{CH}	T_{CH}	T_{CH}	0.0
22-26	K_1	1.0	F_{HP}	F_{VHP}	F_{HP}	F_{HP}	F_{VHP}	-2.0
27-31	K_2	0.0	0.0	0.0	0.0	0.0	0.0	0.0
32-36	T_5	0.0	T_{RH}	T_{RH1}	T_{RH}	T_{RH}	T_{RH1}	TW/2
37-41	K_3	0.0	F_{IP}	F_{HP}	0.0	F_{IP}	0.0	3.0
42-46	K_4	0.0	0.0	0.0	F_{IP}	0.0	F_{HP}	0.0
47-51	T_6	0.0	T_{CO}	T_{RH2}	T_{CO}	T_{CO}	T_{RH2}	0.0
52-56	K_5	0.0	F_{LP}	F_{IP}	$.5F_{LP}$	0.0	$.5F_{IP}$	0.0
57-61	K_6	0.0	0.0	0.0	$.5F_{LP}$	F_{LP}	$.5F_{IP}$	0.0
62-66	T_7	0.0	0.0	T_{CO}	0.0	0.0	T_{CO}	0.0
67-71	K_7	0.0	0.0	F_{LP}	0.0	0.0	$.5F_{LP}$	0.0
72-76	K_8	0.0	0.0	0.0	0.0	0.0	$.5F_{LP}$	0.0

* The letter codes refer to the following system configurations: A - Non-reheat; B - Tandem compound, single reheat; C - Tandem compound, double reheat; D - Cross compound, single reheat; E - Cross compound, single reheat; F - Cross compound, double reheat; W - Hydro.

WSCC STABILITY PROGRAM
INPUT FORMAT
TURBINE DATA
(GOVERNOR TYPES S&W)

ORGANIZATION _____
PROJECT _____
SHEET ___ OF ___ DATE _____

	T	TYPE	NAME	KV	ID	T_4	K_1	K_2	T_5	K_3	K_4	T_6	K_5	K_6	T_7	K_7	K_8	
COMMENTS	1	2	3–11	12–15	16	17–21	22–26	27–31	32–36	37–41	42–46	47–51	52–56	57–61	62–66	67–71	72–76	77–80
	T	F																

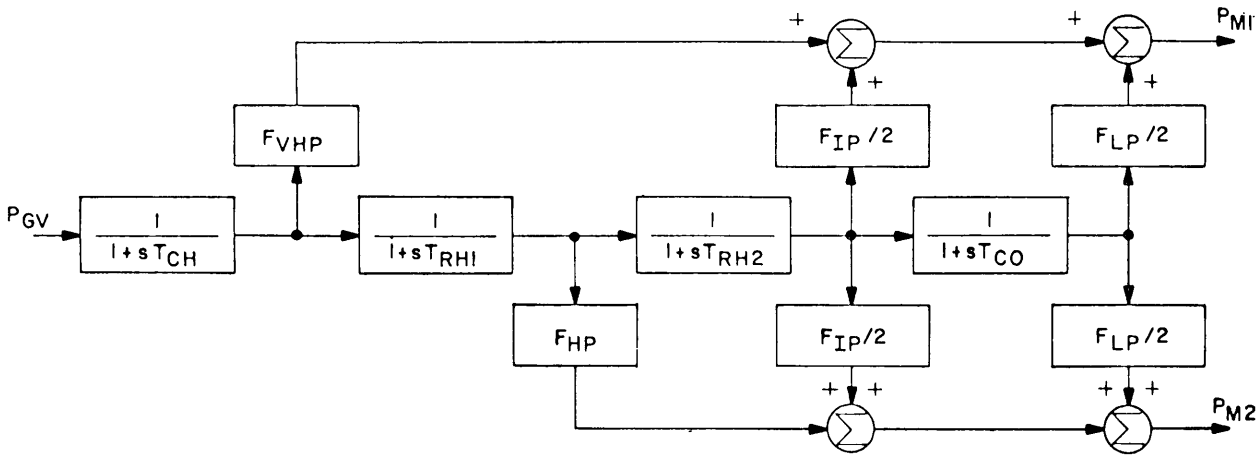

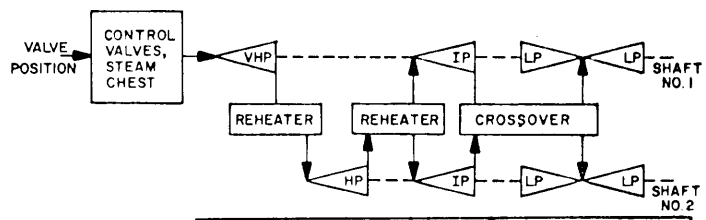

INPUT DATA

SPECIFY: $T_4 = T_{CH}$, $K_1 = F_{VHP}$, $T_5 = T_{RH1}$, $K_4 = F_{HP}$, $T_6 = T_{RH2}$, $K_5 = .5F_{IP}$, $K_6 = .5F_{IP}$, $T_7 = T_{CO}$, $K_7 = .5F_{LP}$, $K_8 = .5F_{LP}$

WSCC STABILITY PROGRAM GOVERNOR-TURBINE MODELS	
WSCC TYPE F	FIGURE 10 JUNE 12, 1974
CROSS COMPOUND DOUBLE REHEAT TURBINE	

TURBINE INPUT DATA

FOR GOVERNOR TYPES S AND W

COLUMN	
1	Card Type - T
2	Turbine Type (A,B,C,D,E,F, or W)*
3	Blank
4-15	Bus Name
16	Machine Identification (alphanumeric)
17-76	See Table Below
77-80	Blank

INPUT ITEM FOR TURBINE TYPE**

COLUMN	FIELD	A*	B	C	D	E	F	W
17-21	T_4	T_{CH}	T_{CH}	T_{CH}	T_{CH}	T_{CH}	T_{CH}	0.0
22-26	K_1	1.0	F_{HP}	F_{VHP}	F_{HP}	F_{HP}	F_{VHP}	-2.0
27-31	K_2	0.0	0.0	0.0	0.0	0.0	0.0	0.0
32-36	T_5	0.0	T_{RH}	T_{RH1}	T_{RH}	T_{RH}	T_{RH1}	TW/2
37-41	K_3	0.0	F_{IP}	F_{HP}	0.0	F_{IP}	0.0	3.0
42-46	K_4	0.0	0.0	0.0	F_{IP}	0.0	F_{HP}	0.0
47-51	T_6	0.0	T_{CO}	T_{RH2}	T_{CO}	T_{CO}	T_{RH2}	0.0
52-56	K_5	0.0	F_{LP}	F_{IP}	$.5F_{LP}$	0.0	$.5F_{IP}$	0.0
57-61	K_6	0.0	0.0	0.0	$.5F_{LP}$	F_{LP}	$.5F_{IP}$	0.0
62-66	T_7	0.0	0.0	T_{CO}	0.0	0.0	T_{CO}	0.0
67-71	K_7	0.0	0.0	F_{LP}	0.0	0.0	$.5F_{LP}$	0.0
72-76	K_8	0.0	0.0	0.0	0.0	0.0	$.5F_{LP}$	0.0

* The letter codes refer to the following system configurations: A - Non-reheat; B - Tandem compound, single reheat; C - Tandem compound, double reheat; D - Cross compound, single reheat; E - Cross compound, single reheat; F - Cross compound, double reheat; W - Hydro.

WSCC STABILITY PROGRAM
INPUT FORMAT
TURBINE DATA
(GOVERNOR TYPES S&W)

ORGANIZATION _____
PROJECT _____
SHEET ___ OF ___ DATE _____

	T	TYPE		NAME	KV	ID	T_4	K_1	K_2	T_5	K_3	K_4	T_6	K_5	K_6	T_7	K_7	K_8	
COMMENTS	1	2	3	4 5 6 7 8 9 10 11	12 13 14 15	16	17 18 19 20 21	22 23 24 25 26	27 28 29 30 31	32 33 34 35 36	37 38 39 40 41	42 43 44 45 46	47 48 49 50 51	52 53 54 55 56	57 58 59 60 61	62 63 64 65 66	67 68 69 70 71	72 73 74 75 76	77 78 79 80
	T	W																	

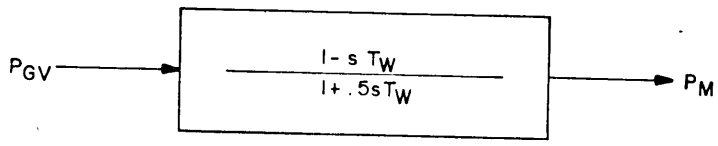

TURBINE INPUT DATA

FOR GOVERNOR TYPES S AND W

COLUMN	
1	Card Type - T
2	Turbine Type (A,B,C,D,E,F, or W)*
3	Blank
4-15	Bus Name
16	Machine Identification (alphanumeric)
17-76	See Table Below
77-80	Blank

INPUT ITEM FOR TURBINE TYPE**

COLUMN	FIELD	A*	B	C	D	E	F	W
17-21	T_4	T_{CH}	T_{CH}	T_{CH}	T_{CH}	T_{CH}	T_{CH}	0.0
22-26	K_1	1.0	F_{HP}	F_{VHP}	F_{HP}	F_{HP}	F_{VHP}	-2.0
27-31	K_2	0.0	0.0	0.0	0.0	0.0	0.0	0.0
32-36	T_5	0.0	T_{RH}	T_{RH1}	T_{RH}	T_{RH}	T_{RH1}	TW/2
37-41	K_3	0.0	F_{IP}	F_{HP}	0.0	F_{IP}	0.0	3.0
42-46	K_4	0.0	0.0	0.0	F_{IP}	0.0	F_{HP}	0.0
47-51	T_6	0.0	T_{CO}	T_{RH2}	T_{CO}	T_{CO}	T_{RH2}	0.0
52-56	K_5	0.0	F_{LP}	F_{IP}	$.5F_{LP}$	0.0	$.5F_{IP}$	0.0
57-61	K_6	0.0	0.0	0.0	$.5F_{LP}$	F_{LP}	$.5F_{IP}$	0.0
62-66	T_7	0.0	0.0	T_{CO}	0.0	0.0	T_{CO}	0.0
67-71	K_7	0.0	0.0	F_{LP}	0.0	0.0	$.5F_{LP}$	0.0
72-76	K_8	0.0	0.0	0.0	0.0	0.0	$.5F_{LP}$	0.0

* The letter codes refer to the following system configurations: A - Non-reheat; B - Tandem compound, single reheat; C - Tandem compound, double reheat; D - Cross compound, single reheat; E - Cross compound, single reheat; F - Cross compound, double reheat; W - Hydro.

INPUT DATA

SPECIFY: $K_1 = -2.0$, $T_5 = .5T_W$, $K_3 = 3.0$

WSCC STABILITY PROGRAM GOVERNOR - TURBINE MODELS	
WSCC TYPE W	FIGURE 11
	JUNE 12, 1974
HYDRO TURBINE	

LOAD NETTING

Any bus that has a nonzero PGEN (positive or negative) in the power flow must either be represented in the transient stability program as a machine using a type 'M' card or must have its generation converted to load using a load netting card.

Any DC bus (a type 'BD' or 'BM' in the power flow data) must be entered on a load netting card as these buses appear to have a nonzero PGEN to the program.

Failure to load net these two types of buses will result in a fatal error in the initialization portion of the program.

TRR 10/1/86

CHG. CODE

BLANK = ADD NEW BUS
D = DELETE BUS
M = CHANGE DATA ENTERED ONLY

U. S. DEPARTMENT OF THE INTERIOR – BONNEVILLE POWER ADMINISTRATION

BPA STABILITY PROGRAM
WSCC INPUT FORMAT LOAD NETTING

SHEET _____ OF _____

CODE _____

DATE _____

L	SUB TYPE	CHG CODE	NAME	KV		NAME	KV		NAME	KV		NAME	KV		NAME	KV
1	2	3	4–15	12–15	16–18	19–30	27–30	31–33	34–45	42–45	46–48	49–60	57–60	61–63	64–75	72–75
L	N															
L	N															
L	N														

CHG CODE

BLANK = ADD NEW BUS, ZONE OR AREA
D = DELETE BUS, ZONE, OR AREA
M = CHANGE DATA ENTERED ONLY

U. S. DEPARTMENT OF THE INTERIOR – BONNEVILLE POWER ADMINISTRATION

BPA STABILITY PROGRAM
WSCC INPUT FORMAT
LOAD REPRESENTATION DATA

SHEET _____ OF _____

CODE _____

DATE _____

L	SUB TYPE	CHG CODE	NAME	KV	ZONE	INTERCHANGE AREA NAME	CONSTANT IMPEDANCE P_1	CONSTANT IMPEDANCE Q_1	CONSTANT CURRENT P_2	CONSTANT CURRENT Q_2	CONSTANT MVA P_3	CONSTANT MVA Q_3	FREQUENCY SENSITIVE LOADS-TYPE A P_4	FREQUENCY SENSITIVE LOADS-TYPE A Q_4	FREQUENCY SENSITIVITY FACTORS L_{DP}	FREQUENCY SENSITIVITY FACTORS L_{DQ}
1	2	3	4 5 6 7 8 9 10 11	12 13 14 15	16 17	18 19 20 21 22 23 24 25 26 27	28 29 30 31 32	33 34 35 36 37	38 39 40 41 42	43 44 45 46 47	48 49 50 51 52	53 54 55 56 57	58 59 60 61 62	63 64 65 66 67	68 69 70 71 72	73 74 75 76 77
L																
L																
L															

UNDERFREQUENCY LOAD SHEDDING

The program will read three different underfrequency load shedding formats:

(1) The BPA format

(2) The old WSCC format

(3) The new WSCC format

Under default conditions, the program will read the BPA format and the old WSCC format. If a '1' is entered in column 23 of the CASE card, the program will read the BPA format and the new WSCC format. A warning message is printed when the program is set to read the new WSCC format.

CHG. CODE

BLANK = ADD NEW BUS RELAY
D = DELETE BUS
M = CHANGE DATA
ENTERED ONLY

U. S. DEPARTMENT OF THE INTERIOR – BONNEVILLE POWER ADMINISTRATION

BPA STABILITY PROGRAM
WSCC INPUT FORMAT
OLD LOAD SHEDDING DATA

SHEET _____ OF _____

CODE _____

DATE _____

U	SUB TYPE	CHG CODE	NAME	KV	LEVEL 1 VOLT(p.u.) / FREQ (HZ)	LEVEL 1 DELAY IN CYCLES	LEVEL 1 LOAD SHED (p.u.)	LEVEL 2 VOLT(p.u.) / FREQ (HZ)	LEVEL 2 DELAY IN CYCLES	LEVEL 2 LOAD SHED (p.u.)	LEVEL 3 VOLT(p.u.) / FREQ (HZ)	LEVEL 3 DELAY IN CYCLES	LEVEL 3 LOAD SHED (p.u.)	LEVEL 4 VOLT(p.u.) / FREQ (HZ)	LEVEL 4 DELAY IN CYCLES	LEVEL 4 LOAD SHED (p.u.)	LEVEL 5 VOLT(p.u.) / FREQ (HZ)	LEVEL 5 DELAY IN CYCLES	LEVEL 5 LOAD SHED (p.u.)
1	2	3	4–11	12–15	16–20	21–23	24–26	27–31	32–34	35–37	38–42	43–45	46–48	49–53	54–56	57–59	60–64	65–67	68–70
U																			
U																			
U																		

DATA CARD LAYOUT

LOAD SHEDDING DATA (MEGAWATTS)

U	SUB TYPE	CHG CODE	NAME	KV	LEVEL 1 VOLT (PU) / FREQ (Hz)	LEVEL 1 DELAY CYCLES	LEVEL 1 LOAD SHED (MW)	LEVEL 2 VOLT (PU) / FREQ (Hz)	LEVEL 2 DELAY CYCLES	LEVEL 2 LOAD SHED (MW)	LEVEL 3 VOLT (PU) / FREQ (Hz)	LEVEL 3 DELAY CYCLES	LEVEL 3 LOAD SHED (MW)	LEVEL 4 VOLT (PU) / FREQ (Hz)	LEVEL 4 DELAY CYCLES	LEVEL 4 LOAD SHED (MW)	LEVEL 5 VOLT (PU) / FREQ (Hz)	LEVEL 5 DELAY CYCLES	LEVEL 5 LOAD SHED (MW)	W
			A8	F4.0	F4.2	F3.1	F5.0	F4.2	F3.1	F5.0	F4.2	F3.1	F5.0	F4.2	F3.1	F5.0	F4.2	F3.1	F5.0	

Column	
1	Card Type - U
2	Sub Type - F (Frequency)
	- V (Voltage)
3	Change Code (if needed)
4-15	Bus Name, Bus Base kV in Col. 12-15
16-27	Level 1
	16-19 (frequency in Hz or p.u. voltage to shed load)
	20-22 (delay time before shedding - in cycles)
	*23-27 (load to be shed - in MW)
**28-39	Level 2

Column	
**40-51	Level 3
**52-63	Level 4
**64-75	Level 5
76-79	Blank
80	Special Code - W

Note: *The reactive load will be proportionately shed based on initial values of QLOAD.

**Same as for Level 1.

WSCC STABILITY PROGRAM
INPUT FORMAT
NEW LOAD SHEDDING

ORGANIZATION _____
PROJECT _____
SHEET ____ OF ____ DATE _____

SHEDDING	U	FVD	NAME	KV	SHUNT	LEVEL 1				LEVEL 2				LEVEL 3				LEVEL 4				LEVEL 5			
						FREQ. VOLT	TIMER	PCB	LOAD SHED	FREQ. VOLT	TIMER	PCB	LOAD SHED	FREQ. VOLT	TIMER	PCB	LOAD SHED	FREQ. VOLT	TIMER	PCB	LOAD SHED	FREQ. VOLT	TIMER	PCB	LOAD SHED
COMMENTS	1	2	3 4 5 6 7 8 9 10 11	12 13 14 15	16	17 18 19 20 21	22 23 24	25 26	27 28 29	30 31 32 33 34	35 36 37	38 39	40 41 42	43 44 45 46 47	48 49 50	51 52	53 54 55	56 57 58 59 60	61 62 63	64 65	66 67 68	69 70 71 72	73 74 75	76 77	78 79 80
	U																								
	U																								
	U																								
	U																								
	U																								
	U																								
	U																								
	U																								
	U																								
	U																								
	U																								
	U																								
	U																								

6-32

WSCC STABILITY PROGRAM

LOAD SHEDDING DATA

COLUMN	
1	Card Type (U)
2	Load Shedding Type (F, V, D) F - Underfrequency V - Undervoltage (Absolute Magnitude) D - Undervoltage (Deviation from Initial Valve)
4-15	Bus, Zone, or Area Name Give Bus Name in columns 4-15 if data is for a single bus. Give Zone Name in columns 14-15 if data is for every load bus in a zone (columns 4-13 must be blank). Give Area Name in columns 4-13 if data is for every load bus in an area (columns 14-15 must be blank). Type TOTAL in columns 4-8 if data is for every bus in the system (columns 9-15 must be blank).
16	Shunt switch (Blank, S) BLANK - Do not shed any bus shunt S - Shed bus shunt
17-29	Level 1 settings 17-21 Bus frequency (Hz) or voltage (p.u.) threshold setting at which the load shedding timer starts timing. If voltage deviation, this will be a negative number. 22-24 Timer setting (cycles): the length of time that bus frequency or voltage must remain below the threshold setting before a trip signal is issued to the circuit breaker. 25-26 Circuit breaker trip time in cycles (includes the auxiliary relay time). 27-29 Per unit of initial bus active and reactive load to be shed.
30-42	Level 2 settings Columns 30-34, 35-37, 38-39 and 40-42 are the same as columns 17-21, 22-24, 25-26 and 27-29, respectively.
43-55	Level 3 settings Columns 43-47, 48-50, 51-52 and 53-55 are the same as columns 17-21, 22-24, 25-26 and 27-29, respectively.
56-68	Level 4 settings Columns 56-60, 61-63, 64-65 and 66-68 are the same as columns 17-21, 22-24, 25-26 and 27-29, respectively.

WSCC STABILITY PROGRAM

LOAD SHEDDING DATA (CON'T)

COLUMN	
69-80	Level 5 settings Columns 69-72, 73-75, 76-77 and 78-80 are the same as columns 17-21, 22-24, 25-26 and 27-29, respectively. Note that the field size for the threshold (columns 69-72) is smaller for the level 5 setting.

DATA CARD LAYOUT

UNDERFREQUENCY LOAD SHEDDING RELAY CF-1

R	SUB TYPE	NAME	KV (KV)	FRELAY (HZ)	TLEVER (SEC)	BKRDLY (CYCLE)	PSHED1 (MW)	QSHED1 (MVAR)	PSHED2 (MW)	QSHED2 (MVAR)	PSHED3 (MW)	QSHED3 (MVAR)	PSHED4 (MW)	QSHED4 (MVAR)
R	S	A8	F4.0	F4.2	F4.2	F4.2	F6.0	F6.0	F6.0	F6.0	F6.0	F6.0	F6.0	F6.0

Induction Disc Relay Model (CF-1)

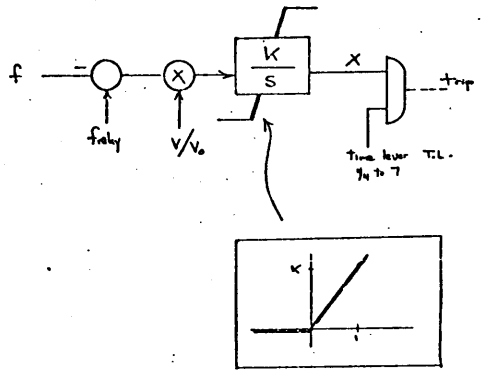

A trip signal is initiated when $X \geq$ T.L.

Data input includes

(1) f_{relay} device trip frequency setting (Hz)

(2) Time lever T.L. (sec)

K can be internally computed by

$K = 1/(2.2 + .125(f_{relay} - 59))$

FIG RS-1

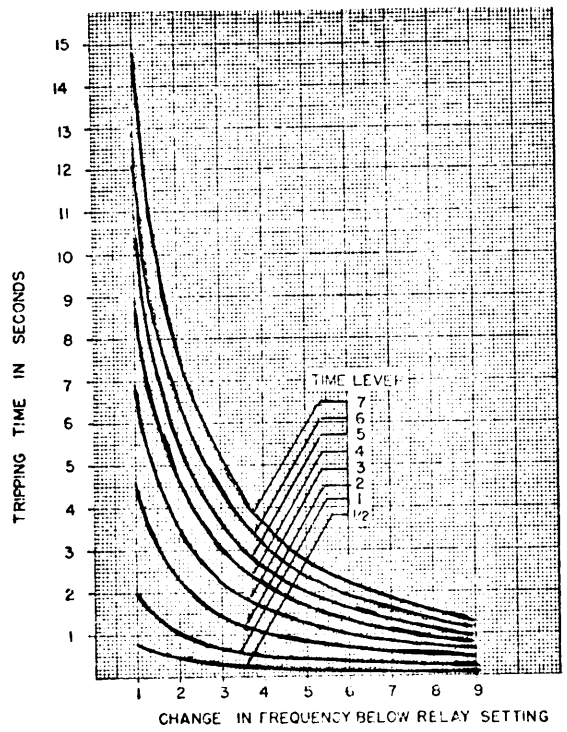

FIG RS-2 Typical 59 Hz Time Curves of the Type CF-1 Underfrequency Relay.

Underfrequency Load Shedding Relay, CF-1

This model represents CF-1 or other induction disc type relays where the operating time is a function of frequency decay rate. There are two basic parameters: (1) FRELAY--trip frequency setting and, (2) TLEVER--time lever. The disc starts rotation when system frequency falls below FRELAY. TLEVER, which acts as a stop adjustment, determines the amount of rotation required before contact closure.

Fig RS-1 shows a schematic for this model. It may be noted that the frequency deviation signal is multiplied by the ratio V/Vo which is the ratio of actual bus voltage to that at steady state. Thus, contact closure will take longer if the bus voltage magnitude falls below the steady state value. Fig RS-2 shows the characteristics for CF-1 published by Westinghouse.

Column	
1	Card Type - R
2	Sub Type - S
3	Blank
4-15	NAME, KV -- Bus name and base KV to which relay applies
16-20	Blank
21-24	FRELAY -- Trip frequency setting -- (Hz)
25-28	TLEVER -- Time Lever (sec.)
29-32	BKRDLY -- Breaker trip time -- (cycle)
33-44	PSHED1, QSHED1 -- Constant impedance P and Q load to be shed -- MW, MVAR
45-56	PSHED2, QSHED2 -- Constant current P and Q load to be shed -- MW, MVAR
57-68	PSHED3, QSHED3 -- Constant MVA P and Q load to be shed -- MW, MVAR
69-80	PSHED4, QSHED4 -- Frequency sensitive MVA, P and Q load to be shed (as defined for LA type load card) -- MW, MVAR

DATA CARD LAYOUT

GENERATOR UNDERFREQUENCY RELAY

1	2	3	4–15	16	17–20	21–25	26–30	31–35	36–40	41–80
R	SUBTYPE		NAME	KV (KV)	ID	GFREQ1 (HZ)	RDELAY (CYCLE)	GFREQ2 (HZ)	BKRDLY (CYCLE)	
R	M		A8	F4.0	R1	F5.2	F5.2	F5.2	F5.2	

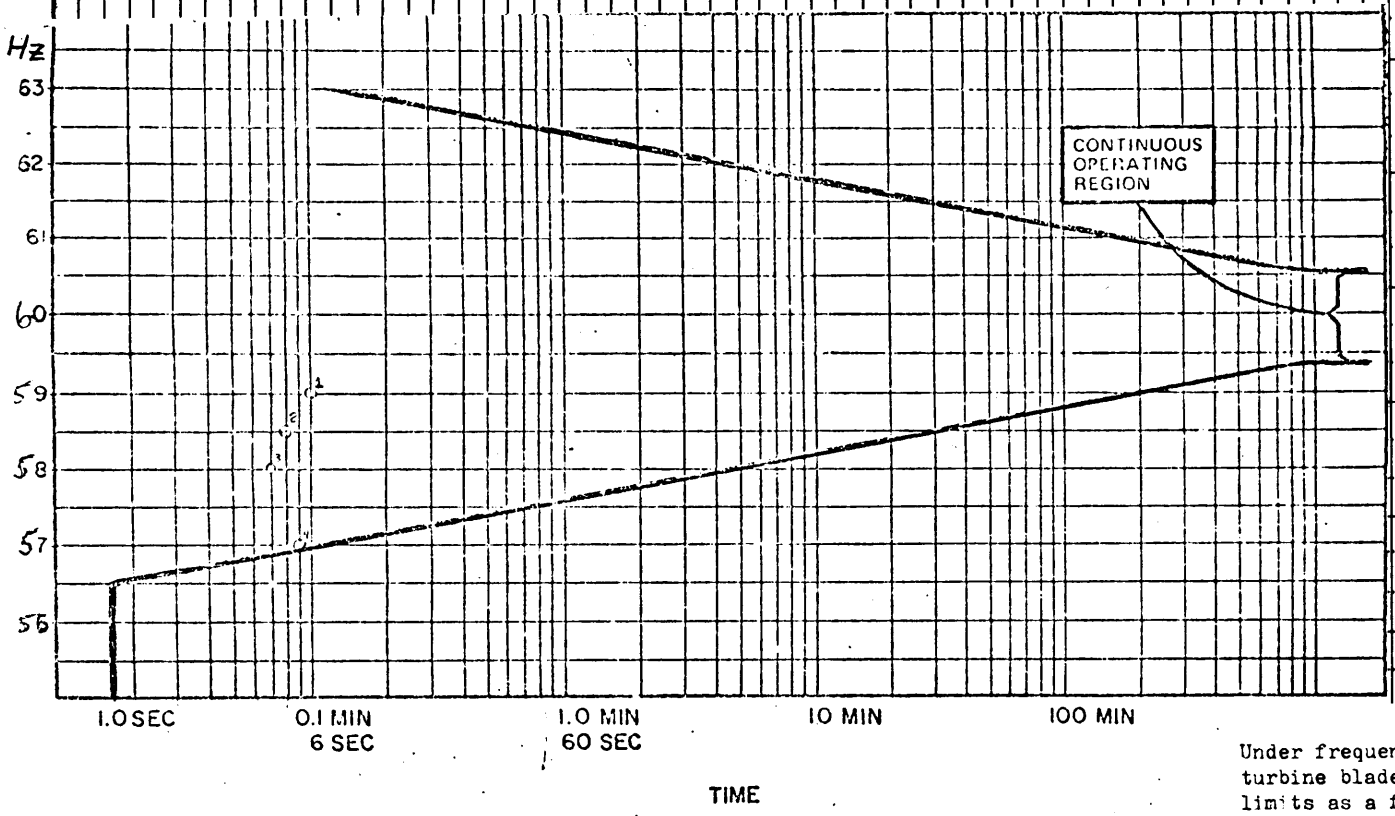

FIG RM-1 TURBINE OFF-FREQUENCY LIMITS

TRANSIENT STABILITY PROGRAM

Generator Underfrequency Relay

Column	
1	Card Type – R
2	Sub Type – M
3	Blank
4–16	NAME, KV, ID -- Generator bus name, base KV and generator ID to which relay applies
17–20	Blank
21–25	GFREQ1 -- First level trip with delay -- (Hz)
26–30	RDELAY -- Delay for GFREQ1 (cycles)
31–35	GFREQ2 -- Instantaneous trip level (Hz)
36–40	BKRDLY - Breaker trip time -- (cycles)
41–80	Blank

Generator Underfrequency Relay

Under frequency tripping is provided on turboalternators for turbine blade protection. Fig RM-1 shows turbine off-frequency limits as a function of time.

Two frequency levels, GFREQ1 and GFREQ2 are provided. The unit will trip if the frequency remains below GFREQ1 in excess of RDELAY cycles. The unit will trip instantaneously if frequency falls below GFREQ2.

DATA CARD LAYOUT

UNDER FREQUENCY LINE TRIPPING RELAY

R	SUB TYPE	CHG CODE	NAME 1	KV1	C - NO TRIP	NAME 2	KV2	CKT ID	FTRIP (Hz)	TRELY (CYC)	TRIP (CYC)	TRANF. TRIP TIME DELAY (CYC)
R	U		A8	F4.0		A8	F4.0		F5.1	F5.2	F5.5	F5.2

TRANSIENT STABILITY PROGRAM – RELAYS

Underfrequency Line Tripping Relay

Card format RU describes input data for this relay type. The relay automatically opens the line NAME 1 kV1 -- NAME 2 kV2 if bus frequency at bus NAME 1 kV1 falls below a specified value FTRIP(Hz) and stays below that value for a given time TRELY (cycles). Actual tripping of the line is delayed by TRIP (cycles) to represent communication and breaker time. Both ends of the line will open simultaneously. Transfer trip time delay for remote relay operation is provided as shown on the card format. One or more remote relay cards may be used with this relay card. Controlling relay type designation on the remote relay card will be U.

Column	
1	Card Type – R
2	Sub-Type – U – Underfrequency Line Tripping Relay
3	Blank
4--6	Blank
7-18	Bus Name 1, Bus 1 Base kV in Columns 15-18
19	"C" means do not trip the line; signal is used for remote tripping
20-31	Bus Name 2, Bus 2 Base kV in Columns 28-31
32	Circuit Identification (1,2,3, or E,W, etc.)
33	Blank
34-38	FTRIP – Threshold value of bus frequency-(Hz)
39-43	TRELY – Required duration for bus frequency to remain below threshold value for a trip (cycles)
44-48	TRIP – Time to represent communication and breaker delay -- (cycles)
49-73	Blank
74-78	**Transfer trip time delay -- (cycles)**
79-80	**Blank**

Chapter 6
Series Capacitors with ZnO Bypass and TCSC Models

Series Capacitors which are protected with ZnO bypass and Thyristor-Controlled Series Capacitors (TCSC) are both modeled using RZ records. They are distinquished with their subtype entered on column 4. Series Capacitors with ZnO bypass are modeled with subtype A; TCSC with subtypes B,C,D,F, and G (subtype E is not used).

6.1 Series Capacitors with ZnO Bypass Devices.

The ZnO model applies to series compensated lines, which consist of a series capacitor in a line section. This device is also known as a metal oxide varistor (MOV). The line containing the ZnO-protected capacitor consist of a line section. At least one other line section element must exist.

The series capacitor element has three states shown in Figure 6-1.

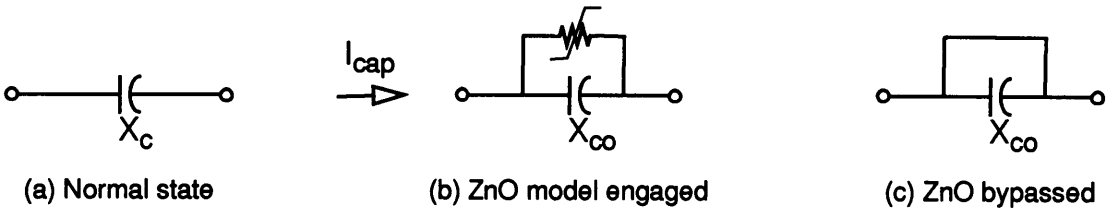

Figure 6-1 States of Series capacitor with ZnO bypass device

1. Normal state (Fig 6-1a). The series capacitor reactance X_c is the steady state value.
2. ZnO model engaged (Fig 6-1b). The equivalent impedance $Z_{c'} = R_{c'} + jX_{c'}$ is a nonlinear function of the current I_{cap}.
3. ZnO bypass state (Fig 6-1c). The capacitor is series-shunted, setting its effective impedance to zero.

The ZnO model is defined with an RZ A record shown in Fig 6-2.

6-7

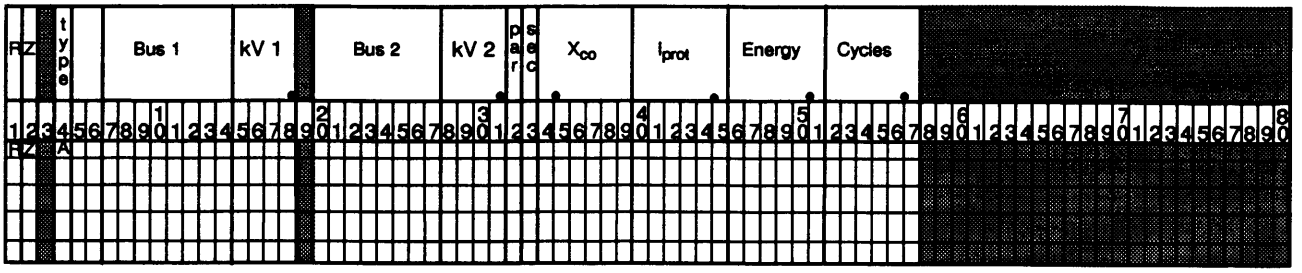

Figure 6-2 RZ type A record layout

Table 6-1. Column description of RZ A record

Field	Format	Description	Units
X_{co}	F6.5	Nominal capacitive reactance	p.u.
I_{prot}	F6.1	Current at which ZnO begins clipping	amps
Energy	F6.1	Accumulated energy required to bypass ZnO device (accumulated energy must exceed this value before the timer reaches Cycles)	Megajoules
Cycles	F6.1	Time required for accumulated energy to bypass ZnO device	Cycles

When $I_{cap} > 0.98\ I_{prot}$, the ZnO model is switched in and two quantities accumulate: the energy and the elapsed time. The ZnO model can enter one of the three states below.

1. If the energy $I_{cap}^2 R_{c'}$ accumulates fast enough, i.e., it exceeds *Energy* before the timer reaches *Cycles*, then the ZnO model is bypassed. $R_{c'}$ is the real part of the ZnO impedance.
2. If the energy $I_{cap}^2 R_{c'}$ does not accumulates fast enough, i.e. it does not exceed *Energy* before the timer reaches *Cycles,* then the model is not bypassed.
3. If the current drops below $0.98\ I_{prot}$, the ZnO model drops out. If it later rises above $0.98\ I_{prot}$, the timer and accumulated energy are both reinitialized and engaged.

If the ZnO device was bypassed because of accumulated energy, the capacitor X_{co} is reinserted whenever the current I_{cap} becomes less than $0.05\ I_{prot}$.

6-7.1

6.2 Thyristor Controlled Series Capacitors (TCSC) models

Three Thyristor Controlled Series Capacitors (TCSC) models are supported. (See Table 6-2). Each model requires five RZ records: subtypes B-D and F-G. Subtype A pertains to ZnO protection, which is an entirely different device and is covered in section 6.1. Subtype E is not defined.

The model type is defined on the RZ D record.

Table 6-2. Description of TCSC Models

Model	Description	Control scheme
0	(inactive)	(none - model disabled)
1	GE TCSC	Figures 6-3 and 6-4.
2	Rapid Adjustment of Network Impedance (RANI)	Figures 6-5.and 6-6
3	Open loop (programmed) TCSC control	Figure 6-7.

6-8

6.3 Model 1 Control Scheme

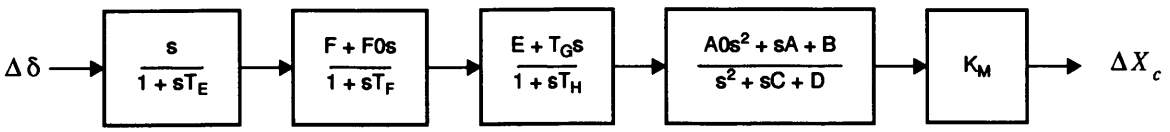

Figure 6-3 Control Block for GE TCSC (Model 1)

The input $\Delta\delta$ is the synthesized angle and is derived as shown in Figure 6-4.

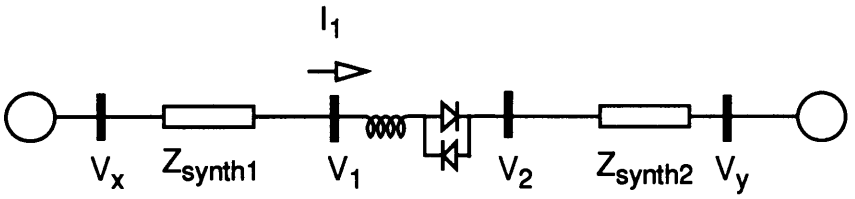

Figure 6-4 Machine Equivalent Model For Computing Synthesized Angles

From the known values of V_1 and I_1 all remaining voltages are easily computed. The synthesized angle is the electrical torque angle between bus x and bus y, i.e.,

$$\delta = \operatorname{atan} V_x - \operatorname{atan} V_y \quad .$$

6-9

6.4 Model 2 Control Scheme

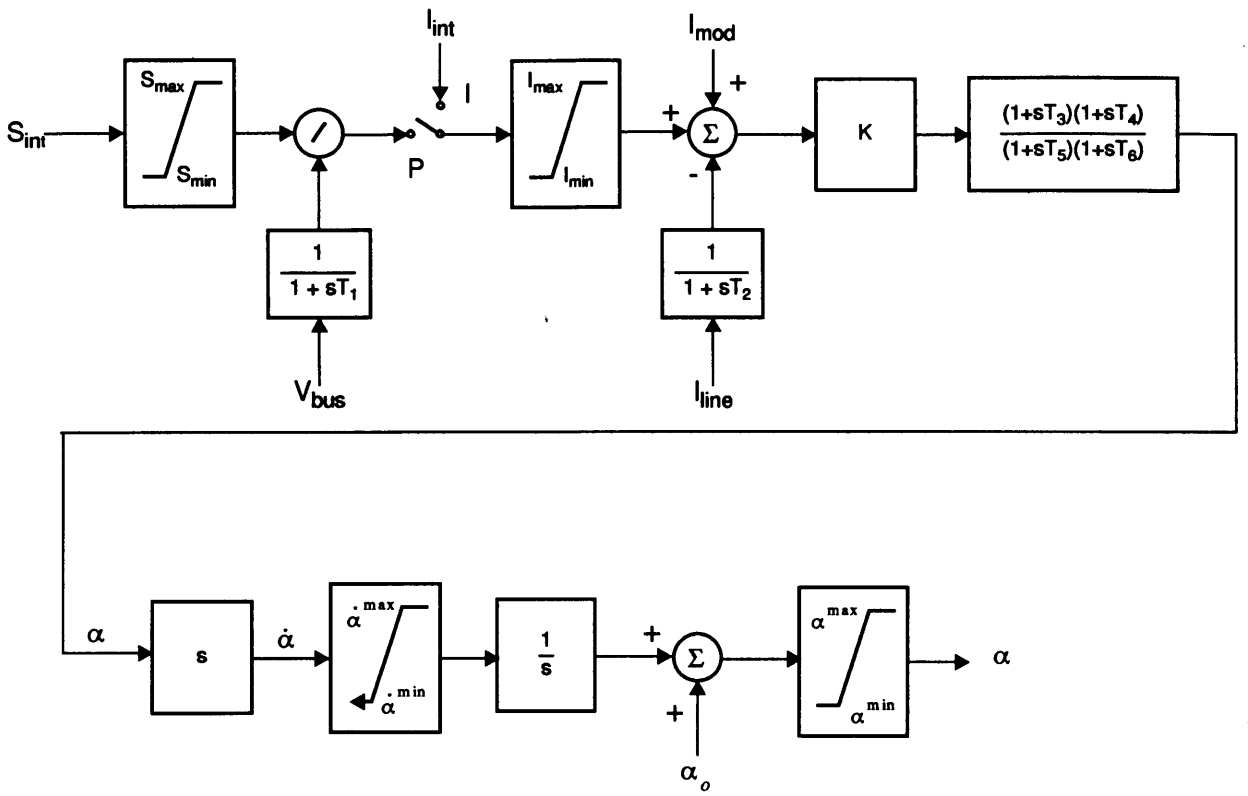

Figure 6-5 Control Block For Rapid Adjustment of Network Impedance (RANI) (Model 2)

The rate of change limits are computed below.

$$\dot{\alpha}^{max} = \frac{B^2{}_v X_{maxp} \Pi X_{int}}{2(\cos(2\alpha) + 1)} \qquad \text{(Eq 6-4)}$$

$$\dot{\alpha}^{min} = \frac{B^2{}_v X_{maxn} \Pi X_{int}}{2(\cos(2\alpha) + 1)} \qquad \text{(Eq 6-5)}$$

The fundamental frequency reactance of the controlled reactor, X_v, is computed directly from the firing angle α and X_{int}.

6-10

$$X_v = \frac{\pi X_{int}}{\sigma - \sin\sigma}$$

$$\sigma = 2(\pi - \alpha) \qquad \text{(Eq 6-6)}$$

The control scheme for the variable admittance modulation signal I_{mod} is shown in Figure 6-6.

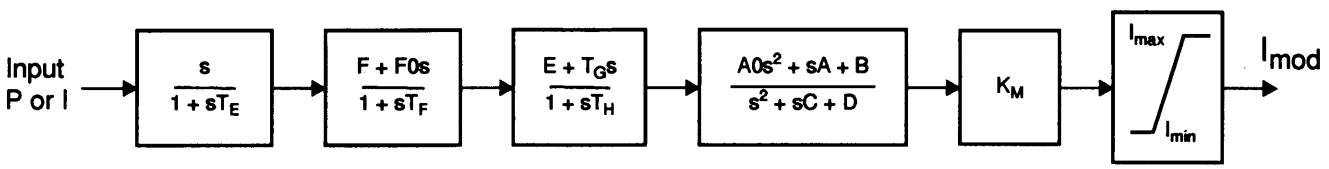

Figure 6-6 Control block for Variable Admittance Modulation (Model 2)

The variables E, F, and A0 have integer values of 0 or 1, depending upon block type. They are dimensionless.

6-11

6.5 Open loop (programmed) TCSC control (Model 3)

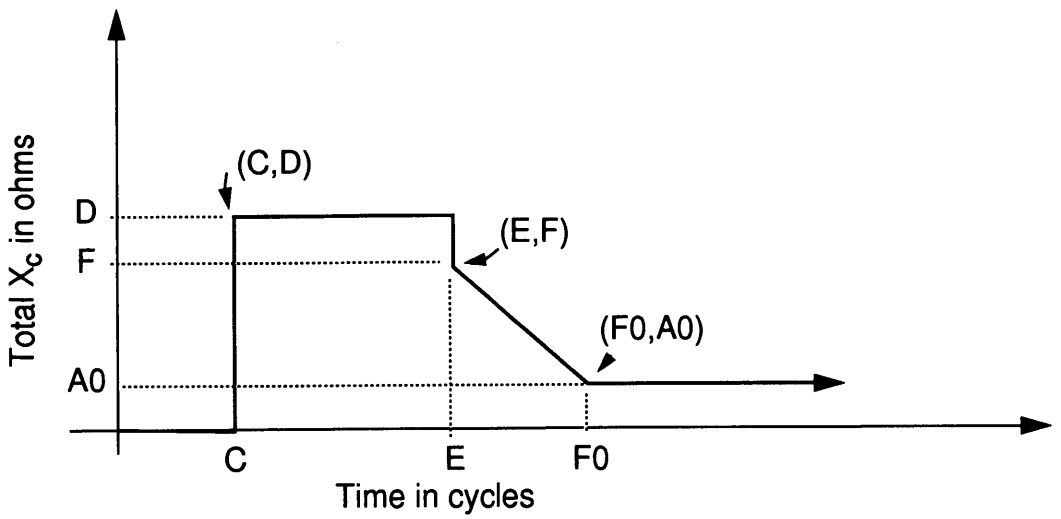

Figure 6-7 Total X_C-time Open Loop Forced Values (Model 3 Only)

This curve is defined uniquely with three corner points: (C,D), (E,F), and (F0,A0), which are specified on the RZ F record. As implemented, the discontinuities at times C, E, and F0 are actually ramps implicit with the time step size. Artificial switching events can be introduced to make these ramps arbitrarily steep.

6-12

6.6 RZ type B record

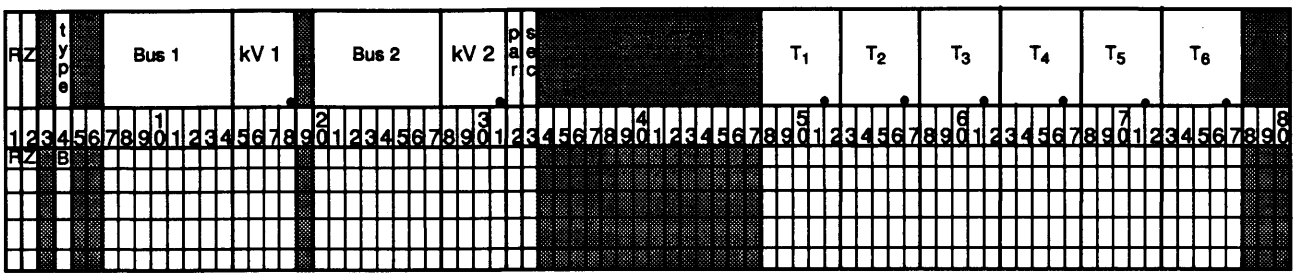

Figure 6-8 Rz Type B Record Layout

Table 6-3. Column description of RZ B record

Field	Format	Description	Units
T_1, T_2, T_3	F5.1	Time constants of control system (Model 2 only)	seconds
T_4, T_5, T_6	F5.1	Time constants of control systems (Model 2 only)	seconds

6-13

6.7 RZ type C record

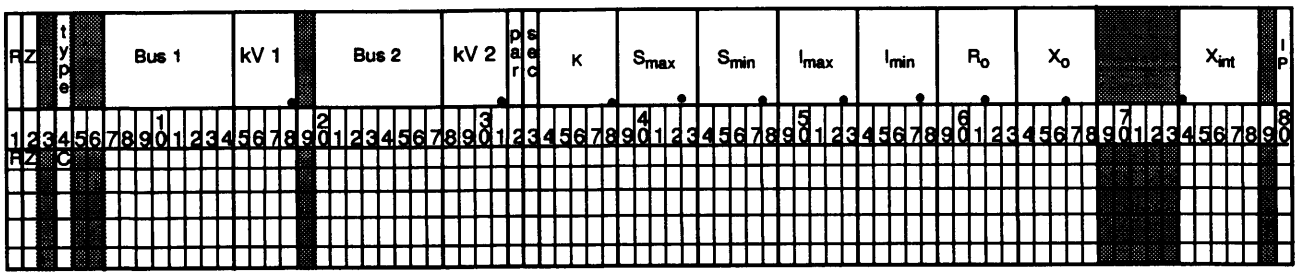

Figure 6-9 . RZ Type C Record Layout

Table 6-4. Column description for RZ subtype C

Field	Format	Description	Units
K	F5.0	Control block gain (Model 2 only)	degrees/amp
S_{max}	F5.1	Maximum MVA (Model 2 only)	p.u.
S_{min}	F5.1	Minimum MVA (Model 2 only)	p.u.
I_{max}	F5.1	Maximum current (Model 2 only)	p.u.
I_{min}	F5.1	Minimum current (Model 2 only)	p.u.
R_o, X_o	F5.2	Fixed impedance elements	ohms
X_{int}	F5.5	Internal value of variable reactance. If zero entered, default value is computed to provide α at mid range (90°).	ohms
I or P	A1	Control: I = constant current, P = constant MVA. (Model 2 only)	

6-14

Figure 6-8 depicts the relationship between R_o, X_o, R_v, and X_v.

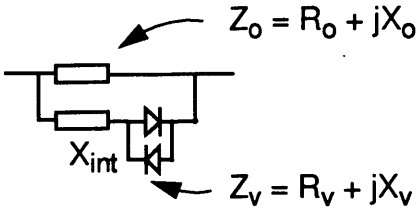

Figure 6-10 TCSC Element showing Fixed Z_o and Variable Z_v Impedances

The initial branch impedance, Z_c, consists of the parallel elements Z_o and Z_v

$$Z_c = Z_o \parallel Z_V \qquad \text{(Eq 6-7)}$$

from which the variable impedance, Z_v, is obtained. If X_{int} is specified then σ is computed from Eq (6-5). Otherwise, X_{int} defaults to a value corresponding to $\sigma = 90°$.

6-15

6.8 RZ type D record

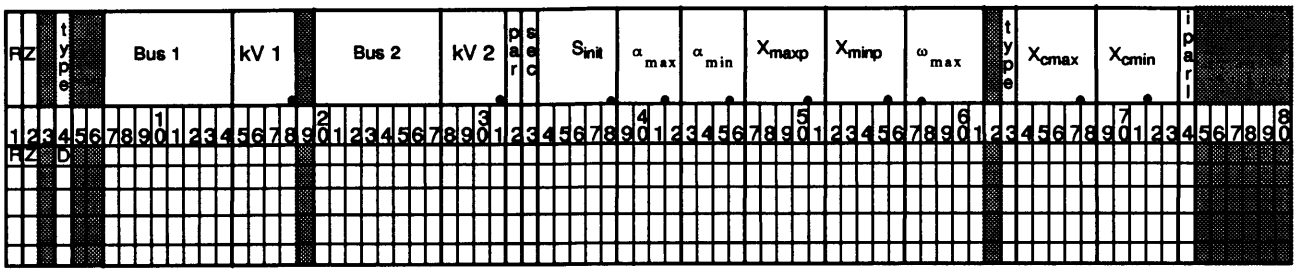

Figure 6-11 RZ Type D Record Layout

Table 6-5. Column description for RZ subtype D

Field	Format	Description	Units
S_{init}	F5.1	Initial value of MVA or current	p.u.
α_{max}	F4.1	Maximum firing angle	degrees
α_{min}	F4.1	Minimum firing angle	degrees
X_{maxp}	F5.1	Maximum positive rate of change in impedance *	ohms/second
X_{minp}	F5.1	Maximum negative rate of change in impedance *	ohms/second
ω_{max}	F5.2	Critical frequency. If system frequency exceeds ω_{max}, firing angle is forced to α_{min} *	hertz
IRANITYPE	I1	Model type: 0 = No control 1 = GE model 2 = RANI model 3 = Open Loop control	
X_{cmax}	F5.4	Maximum (upper limit) total device impedance	ohms
X_{cmin}	F5.4	Minimum (lower limit) total device impedance	ohms
IPARL	I1	Number of parallel lines represented by device	1-9

* Model 2 only.

6-16

6.9 RZ type F record

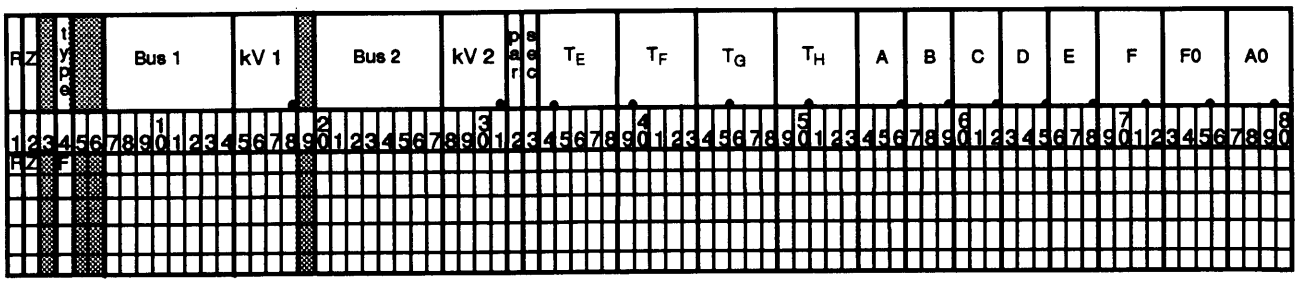

Figure 6-12 RZ Type F Record Layout

Table 6-6. Column description for RZ subtype F

Field	Format	Description	Units
T_E, T_F, T_G, T_H	F5.4	Control block time constants	seconds
A, C	F3.0	Model 1 or 2: Control block time constants Model 3: Open loop X_v (positive is capacitive)	radians/second ohms
B, D	F3.0	Model 1 or 2: Control block time constants Model 3: Open loop switching time	radians^2/second^2 cycles
E	F3.0	Model 1 or 2: Control block time constant Model 3: Open loop switching time	seconds cycles
F	F4.1	Model 1 or 2: Control block coefficient Model 3: Open loop X (positive is capacitive)	0 or 1 ohms
F0	F4.1	Model 1 or 2: Control block time constant Model 3: Open loop switching time	seconds cycles
A0	F4.1	Model 1 or 2: Control block coefficient Model 3: Open loop X (positive is capacitive)	0 or 1 ohms

6-17

6.10 RZ type G record

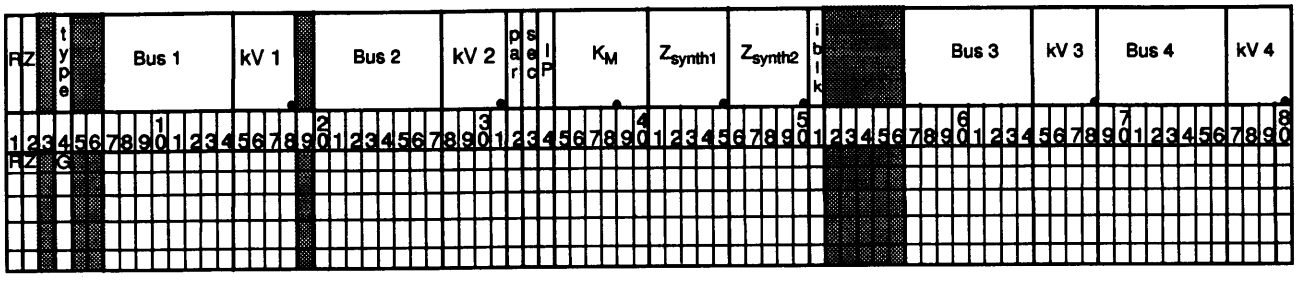

Figure 6-13 RZ Type G Record Layout

Table 6-7. Column description for RZ subtype G

Field	Format	Description	Units
P or I	A1	P = power input; I = current input	
K_M	F5.2	Variable admittance modulation Model 1: Modulation gain $\frac{\Delta X_c}{\delta}$ Model 2: Modulation gain $\frac{I_{mod}}{\frac{dI}{dt}}$	 p.u./radians p.u./(p.u./seconds) p.u.
Z_{synth1} Z_{synth2}	F5.0	Synthesized impedance looking backwards from Bus 1 Synthesized impedance looking forward from Bus 2	p.u. p.u.
IBLK	I1	Fault blocking override: 0 = No blocking 1 = Alpha based blocking 2 = Power based blocking.	
Bus 3, kV 3	A8, F4.0	Terminal 1 bus of monitored line (defaults to Bus 1)	
Bus 4, kV 4	A8, F4.0	Terminal 2 bus of monitored line (defaults to Bus 2)	

The *synthesized impedances* Z_{synth1} and Z_{synth2} are used to compute the *synthesized angle* between the Thevenins' equivalent voltage sources See Figure 6-10.

6-18

CHG CODE

BLANK = ADD NEW CAPACITOR GAP
D = DELETE CAPACITOR GAP
M = CHANGE DATA
ENTERED ONLY

U. S. DEPARTMENT OF THE INTERIOR – BONNEVILLE POWER ADMINISTRATION

BPA STABILITY PROGRAM
WSCC INPUT FORMAT
SERIES CAPACITOR GAP RELAYING

SHEET _____ OF _____

CODE _____

DATE _____

R	SUB TYPE	CHG CODE		NAME 1	KV 1		NAME 2	KV 2	CKT ID	SECTION	GAP FIRING CURRENT (p.u.)	REINSERT CURRENT (p.u.)	REINSERT TIME DELAY CYCLES	NUMBER OF REINSERTION ATTEMPTS	If Gap Arc persists, shorting SW closes in (Cycles)		B or E		TRANSFER TRIP TIME DELAY CYCLES	
1	2	3	4-6	7-14	15-18	19	20-27	28-31	32	33	34-38	39-43	44-48	49-53	54-58	59-63	64	65-73	74-78	79-80
R	G																			
R	G																			
R	G																		

U. S. DEPARTMENT OF THE INTERIOR -- BONNEVILLE POWER ADMINISTRATION

BPA STABILITY PROGRAM
WSCC INPUT FORMAT RELAY DATA

SHEET _____ OF _____

CODE _____

DATE _____

CHG CODE
BLANK = ADD NEW RELAY
D = DELETE RELAY
M = CHANGE DATA ENTERED ONLY

R	SUB TYPE	CHG CODE		NAME 1	KV 1	C = DO NOT TRIP	NAME 2	KV 2	CKT ID	SECTION	BLOCK RATE (MW/SEC)	RATE LIMIT (MW/SEC)	RATE SETTING (MW/SEC)	BIAS SETTING (MW)	POWER LEVEL (MW)	TIME CONSTANT (CYCLES)	BLOCK RATE TIME DELAY (CYCLES)		TRANS TRIP TIME DELAY (CYCLES)	P or D or O
											ZONE T				ZONE B					
											CENTER C_T (p.u.)	ANGLE A_T (DEGREES)	DIAMETER Z_T (p.u.)	TRIP TIME (CYCLES)	CENTER C_B (p.u.)	ANGLE A_B (DEGREES)	DIAMETER Z_B (p.u.)	TRIP TIME (CYCLES)	TRANS TRIP TIME DELAY (CYCLES)	
1	2	3	4-6	7-14	15-18	19	20-27	28-31	32	33	34-38	39-43	44-48	49-53	54-58	59-63	64-68	69-73	74-78	79-80
R																				

STABILITY PROGRAM

TRANSIENT STABILITY PROGRAM RELAYS

I - Impedance Relaying

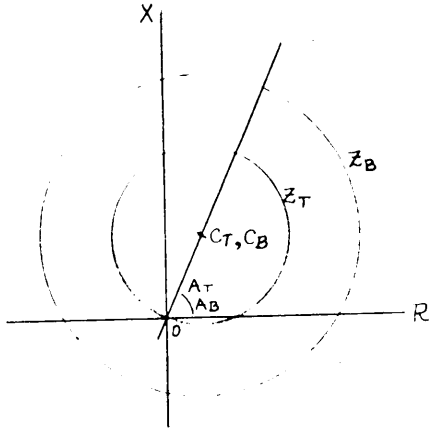

Relay Location at Origin

(b) Input Data

1. Relay location bus, bus
2. Z_T circle diameter Z, per unit
3. Z_T circle center location C_T, Z per unit
4. Z_T circle trip time cycles
5. Key No. 1, Z_T, circle trip local breaker or not
5a. Local breaker reclose time, cycles
6. Remote breakers location to trip from Z_T circle, 5 maximum
6a. Remote breakers reclose time, cycles
7. Key No. 2, Z_T circle trip on apparent Z entry or exit on opposite side.
8a. Z_B blocking circle diameter, Z per unit
8b. Z_B blocking circle center location C_B, Z per unit and A_B, angle degrees.
8c. Z_B - Z_T interzone minimum time, cycles. If Apparent Z exceeds time Z_T circle tripping blocked until Apparent Z exits Z_T circle on opposite side.
9. Key No. 3, carrier pilot operation. If Z_r operated at both ends of line bypass trip time delay.

COLUMN	
1	Card Type - R
2	Sub-Type - D - Impedance Relay O - Out-of-Step Relay
3	Blank
4- 6	Blank
7-18	Bus Name 1, Bus 1 Base kv in Columns 15-18
19	"C" means do not trip the line; signal is used for remote tripping
20-31	Bus Name 2, Bus 2 Base kv in Columns 28-31
32	Circuit Identification (1, 2, 3 or E, W, etc.)
33	Section Number for making an equivalent for series elements
34-38	Circle center location C_T (Z in per unit)
39-43	Angle A_T (degrees)
44-48	Circle diameter Z_T (Z in per unit)
49-53	Circle trip time (cycles)
54-58	Circle center location C_B (Z in per unit)
59-63	Angle A_B (degrees)
64-68	Circle diameter Z_B (Z in per unit)
69-73	Circle trip time (cycles)
74-78	**Transfer trip time delay (cycles)**
79-80	**Blank**

Default Distance Relay Description

As the name implies this distance relay model can be applied to all the network branches (with certain exceptions as noted later). The relay model is very simple in concept and the calculation of impedance as seen by the relay is dependent on the bus voltages at both ends of the branch but independent of its admittance data. (See derivation, Page 7-2.2) However the approximate ratio of resistance to inductive reactance for the branch must be provided (see description for card RL V). Shunt capacitance is neglected. The model assumes (internal to the program) the following:

1. Zone 1 and Zone 2 reach values will be 85% and 125% respectively.

2. Impedance circle characteristic passes through the origin of the R-X diagram.

3. The angle of maximum torque relative to the positive R axis is 75°.

The operation of the relay will depend upon the nominal voltage as follows:

1. For a Zone 2 operation at either end, delayed tripping will occur for all nominal voltages.

2. For 230 kV and higher, communication channels will be assumed. The branch will be tripped instantaneously for Zone 2 operation at both ends.

3. For branches below 230 kV instantaneous trip will occur for Zone 1 operation at either end.

The Default Distance Relay model is capable of reclosing action if requested by the user. In both the tripping and reclosing actions all the parallel lines between bus A & bus B are combined and treated as a single branch.

Three types of relay cards are used by the Default Distance Relay. The RL card and RLV card(s) are required and the RLD card(s) is (are) optional.

RL card provides data for the required Zone 2 relay time delay and the optional reclosing time delay.

RL V card provides the approximate branch resistance to inductive reactance ratio data. At least one set of this data must be provided. This data can be provided as a single value for a certain nominal voltage or a value for a range of nominal voltages. Table RL-1 gives some typical values.

TABLE RL-1

Suggested Values of Approximate R/X_L ratios

kV	R/X_L
100	0.5
115	0.31
138-161	0.25
230	0.125
345-360	0.095
500-higher	0.05

TABLE RL-2

Assignment of R/X_L to Base kV

Base kV	R/X_L
13.8	0.5
16.5	0.5
18.0	0.5
69.0	0.5
115	0.31
132	0.25
230	0.125
280	0.125
345	0.095
500	0.05
750	0.05

The user supplied data values are processed by the program to assign a value to each base kV of the problem. The following example illustrates the procedure. Let Table RL-2 give the set of base kVs for a hypothetical problem. Assuming that the user supplied data are as shown in Table RL-1, Table RL-2 shows the values of approximate R/X ratios assigned to the appropriate base kVs. By inspection, one is able to see the assignment for a kV base for which no explicit value was given. If a base kV falls between two ranges for which values are given, then it is assigned a value of the range nearest to it. At least one RL V card is required. To elaborate further, in Table RL-2 the base kVs 13.8, 16.5, 18.0, and 69.0 all are assigned the value of 0.5, since each of these base kVs is closest to 100 kV with a value of 0.5 in the Table RL-2 entry. Base kV 115 takes on the value 0.31 because of the matching 115 entry in Table RL-1. Base kV 132 has the value 0.25 since it falls closest to the kV range of 138-161 in Table RL-1. Base kV 230 with an exact match in the Table RL-1 entry receives the value of 0.125, and etc.

RL D card is used to supply names of branches to be specifically bypassed from Default Distance Relay application.

The following types of branches are automatically bypassed from Default Distance Relay application:

1. Any branch or circuit for which an impedance relay is explicitly defined.

2. Any branch or circuit with passive nodes (i.e. with multiple sections) defined in the power flow solution.

3. Any branch or circuit containing transformers.

4. Any branch or circuit involved with switching operation (i.e. using IS card).

Derivation of Default Distance Relay Equations

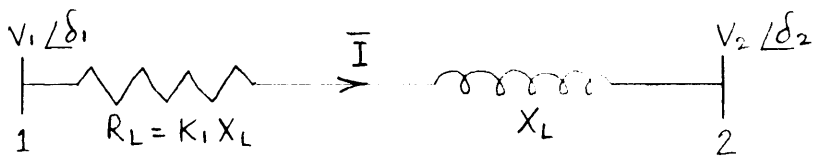

Above is a typical branch for Default Distance Relay application. Shunt capacitance is neglected. K_1 is the approximate R/X_L ratio. The relay logic goes into effect whenever $|\delta_1 - \delta_2| \geq 60^\circ$

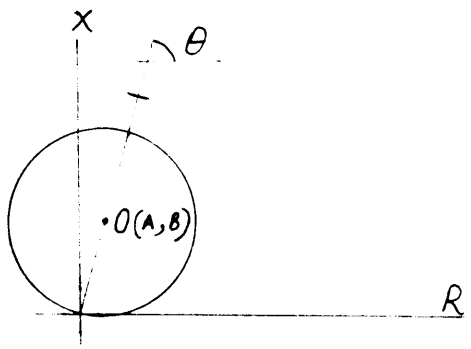

Relay reach = $2F \cdot X_L$ = Circle diam.

For Zone 1: $2F = 0.85$

For Zone 2: $2F = 1.25$

$\theta = 75^\circ$

Coordinates of the center, 'O' are

$A = F X_L \cos\theta = a \cdot X_L$ and,

$B = F X_L \sin\theta = b \cdot X_L$

Calculate apparent impedance from bus 1 to bus 2.

$$\bar{Z}_1 = \frac{\bar{V}_1}{\bar{I}} = \frac{\bar{V}_1}{\bar{V}_1 - \bar{V}_2}(K_1 X_L + j X_L) = \underline{\alpha X_L + j\beta X_L}$$

For Z_1 to lie on or within the circle characteristic the following should be true:

$$(\alpha X_L - A)^2 + (\beta X_L - B)^2 \leq (F \cdot X_L)^2$$

which leads to

$$\underline{\underline{\alpha^2 + \beta^2 - 2\alpha a - 2\beta b \leq 0}}$$

DEFAULT DISTANCE RELAY

RELAY DATA (SINGLE CARD - REQUIRED)

1	2	3–9	10–14	15–19	20–80
R	L		RDELAY (CYCLE)	TRCLSE (CYCLE)	
R	L		F5.2	F5.2	

LINE RESISTANCE APPROXIMATION DATA (REQUIRED)

1	2	3	4	5–9	10–14	15–19	20–24	25–29	30–34	35–39	40–44	45–49	50–54	55–59	60–64	65–69	70–80
R	L		V		CKRA (ND)	KV1 (KV)	KV2 (KV)	CKRB (ND)	KV3 (KV)	KV4 (KV)	CKRC (ND)	KV5 (KV)	KV6 (KV)	CKRD (ND)	KV7 (KV)	KV8 (KV)	
R	L		V		F5.4	F5.0	F5.0	F5.4	F5.0	F5.0	F5.4	F5.0	F5.0	F5.4	F5.0	F5.0	

DEFAULT DISTANCE RELAY BYPASS (OPTIONAL)

1	2	3	4	5–9	10–17	18–22	23–30	31–34	35–39	40–47	48–52	53–60	61–64	65–80
R	L		D		NAME 1	KV1	NAME 2	KV2		NAME 3	KV3	NAME 4	KV4	
R	L		D		A8	F4.0	A8	F4.0		A8	F4.0	A8	F4.0	

RL Card (one required)

Column	
1	Card Type - R
2	Sub Type - L
3-9	Blank
10-14	RDELAY -- Relay time delay (cycles) (none zero)
15-19	TRCLSE -- Time delay for reclosing (cycles) (No reclosing if zero or blank)
20-80	Blank

RL - V Card (required)

1	Card Type - R
2	Sub Type - L
3	Blank
4	Additional sub type - V
5-9	Blank
10-14	CKRA -- Approximate line resistance to inductive reactance ratio -- no dimension

RL - V Card (cont.)

Column	
15-24	KV1, KV2 -- Base kV range to which CKRA applies (if KV2 is blank, CKRA applies to KV1 only)--KV
25-69	Optional field with similar data as CKRA, KV1, KV2
70-80	Blank

RL - D Card (optional)

1	Card Type - R
2	Sub Type - L
3	Blank
4	Additional sub type - D
5-9	Blank
10-34	NAME1, KV1, - NAME2, KV2 -- Branch to be bypassed in Default Distance Relay logic
35-39	Blank
40-64	Optional field with similar data as in Col. 10-34
65-89	Blank

POWER SWING RELAY MODELS

LIST OF ASSUMPTIONS

TYPE 1

1) The rate circuit neglects changes in power due to switching. Therefore, the time derivative of power at time switching plus equals the time derivative at time switching minus.

2) The time derivative of power at the end of the time step is assumed equal to the average value during the time step.

   $\dot{P}_2 = (P_2^- - P_1^+) / \Delta t$ where

   $\dot{P}_2$ is the rate of change of power at the end of the time step.

   P_2 is the power at the end of the time step.

   P_1 is the power at the beginning of the time step.

   Δt is the size of the AC network time step.

3) If $|\dot{P}_2|$ exceeds the rate block setting the block rate timer at the end of the time step is set equal to the block rate time delay. If $|\dot{P}_2|$ is less than or equal to the rate block setting the timer is decresed by Δt

   If $|\dot{P}_2| > R_B$, $TIM_2 = T_D$

   If $|\dot{P}_2| \leq R_B$, $TIM_2 = TIM_1 - \Delta t$ where

   R_B is the rate block setting,

   T_D is the block rate time delay,

   TIM_1 is the timer setting at the beginning of the time step,

   TIM_2 is the timer setting at the end of the time step.

4) The following conditions must exist at the end of the time step for the relay to operate:

   a) The output from the integrator must have an absolute value greater than one.

   b) The time setting TIM_2 must be less than or equal to zero.

5) If the relay trips a line, this line is opened at the end of the time step for which the conditions in item 4 are satisfied. Also, the transfer trip time delay for remote relay operations is measured from the end of the time step.

6) The remote relay operations continue to completion once the relay operates, i.e., the relay cannot reset itself.

WSCC STABILITY PROGRAM
INPUT FORMAT
RELAY DATA

ORGANIZATION _____
PROJECT _____
SHEET ___ OF ___ DATE ___

| | | |

STABILITY PROGRAM

RATE OF CHANGE OF POWER RELAYS

COLUMN	
1	Card Type - R
2	Relay Type (1, 2 or 3)
3	Blank
4- 6	Blank
7-18	Bus Name 1
19	"C" means do not trip this line; signal is used for remote relay operations only.
20-31	Bus Name 2
32	Circuit Identification
33	Section Number
34-38	Relay Types 1 and 2: R_B Rate Block Setting (MW/Second). Relay Type 3: R_{max} Upper Rate Limit (MW/Second).
39-43	Relay Types 1 and 2: R_{max} Upper Rate Limit (MW/Second) The lower rate limit is set equal to the negative of the upper rate limit. Relay Type 3: R_{min} Lower Rate Limit (MW/Second). Note that if the lower rate limit is negative, the minus sign must be included in Columns 39-43.
44-48	R_S Rate Setting (MW/Second).
49-53	Relay Types 1 and 2: BIAS Setting (MW). Together with the power level setting, this entry defines the power that will be permitted to flow. Positive BIAS is defined for power flow from Name 1 Bus to Name 2 Bus. Relay type 3: Blank
54-58	P_S Power Level Setting (MW).

REVISED: APRIL 23, 1974

STABILITY PROGRAM

RATE OF CHANGE OF POWER RELAYS

(Continued)

COLUMN	
59-63	T_C Integrator Time Constant (Seconds)
64-68	Relay Types 1 and 2: T_D Block Rate Time Delay (Cycles) Relay Type 3: T_E Enable Hold Time Delay (Cycles)
69-73	Relay Types 1 and 2: Blank Relay Type 3: T_H Auxiliary Relay Time Delay (Cycles)
74-78	Transfer Trip Time Delay (Cycles)
79-80	Blank

REVISED: APRIL 23, 1974

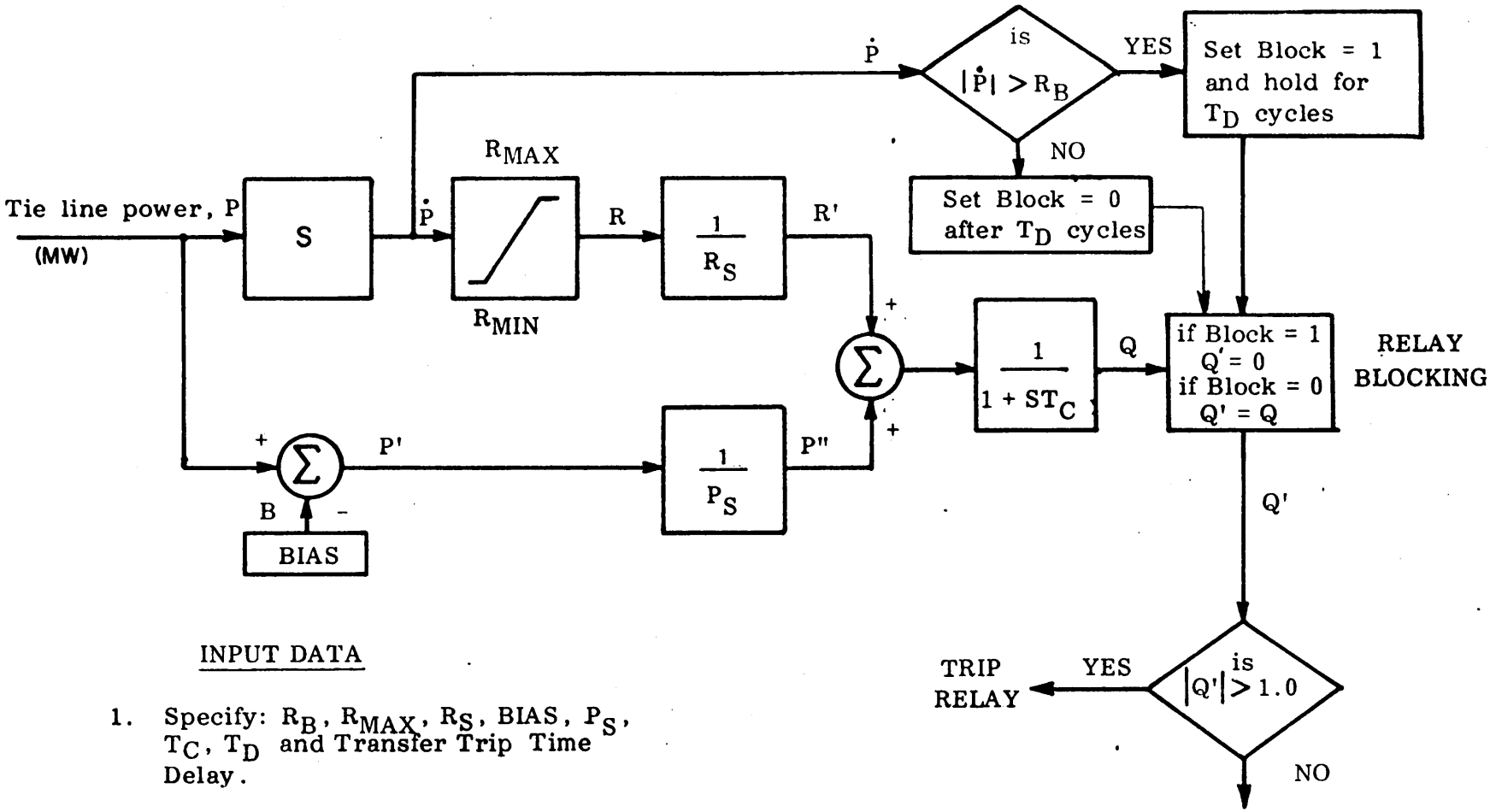

INPUT DATA

1. Specify: R_B, R_{MAX}, R_S, BIAS, P_S, T_C, T_D and Transfer Trip Time Delay.

2. $R_{MIN} = -R_{MAX}$

WSCC STABILITY PROGRAM RATE OF CHANGE OF POWER RELAY MODELS	
WSCC TYPE 1	FIGURE 1 APRIL 1974
97 RC MODEL 1	

TYPE 2

Except as noted below the assumptions for the type 2 relay are the same as those for the type 1 relay.

1) The value for $\dot{P}'_2$ is equal to $\dot{P}_2$ if TIM_2 is less than or equal to zero. Otherwise, $\dot{P}'_2$ equals zero. See figure 2 for the definition of $\dot{P}'_2$.
2) The absolute value of the integrator output must be greater than 1 to trip the relay.

CHG CODE — BLANK = Add new Relay operation; D = Delete Relay operation; M = Change Data-entered only

U. S. DEPARTMENT OF THE INTERIOR – BONNEVILLE POWER ADMINISTRATION

BPA STABILITY PROGRAM
WSCC INPUT FORMAT – REMOTE RELAY OPERATION DATA

SHEET _____ OF _____
CODE _____
DATE _____

R	SUB TYPE	CHG CODE		Controlling Relay Type		CONTROLLING BUS NAME 1	CONTROLLING BUS KV 1	CONTROLLING BUS NAME 2	CONTROLLING BUS KV 2	CKT ID	SECTION	M / D / R / B / G	CONTROLLED BUS NAME	CONTROLLED BUS KV	CONTROLLED BUS NAME	CONTROLLED BUS KV	CKT ID	SECTION	R (p.u.)	X (p.u.)	B (p.u.)
																			DROP LOAD BUS NO.1 (p.u.)	DROP LOAD BUS NO.2 (p.u.)	
																			DROP GEN BUS NO.1 (ID)	DROP GEN BUS NO.2 (ID)	
1	2	3	4	5	6	7–18	19	20–31	32	33	34	35–46	47–48	49–60	61	62	63–68	69–74	75–80		
R	R																				

TRANSIENT STABILITY PROGRAM
REMOTE TRIPPING

TRANSIENT STABILITY PROGRAM
REMOTE TRIPPING
(Continued)

COLUMN

1	Card Type - R
2	Sub-Type - R
3	Blank
4	Blank
5	Controlling Relay Subtype
6	Blank
7-18	Bus Name 1, Bus 1 Base kv in Columns 15-18
19	Blank
20-31	Bus Name 2, Bus 2 Base kv in Columns 28-31
32	Circuit Identification (1, 2, 3, or E, W, etc.)
33	Section Number for making an equivalent for series elements.
34	M - Modify the impedance of the line identified in Columns 35-62 to the impedance indicated in Columns 63-80. D - Disconnect line identified in Columns 35-62 R - Reconnect line identified in Columns 35-62 B - Drop load on buses identified in Columns 35-46 and 49-60 G - Drop generation on buses identified in Columns 35-46 and 49-60
35-46	Controlled Bus Name 1, Base kv in Columns 43-46
47-48	Blank
49-60	Controlled Bus Name 2, Base kv in Columns 57-60
61-62	For M, D or R in Column 34: 61 - Circuit identification 62 - Section number for series elements For B or G in Column 34, Columns 61 and 62 are blank.
63-80	For M in Column 34: Modify the impedance for the line identified in Columns 35-62 to the R, X and B entered in Columns 63-80. B is value for one leg of PI - equivalent circuit with equal legs. For D or R in Column 34, Columns 63-80 are blank.

For B in Column 34:
Drop load on buses identified in Columns 35-46 and 49-60 (enter p.u. of initial load to be dropped). Columns 75-80 are blank.

Load dropping by remote relay tripping will be co-ordinated with local load dropping activated by low voltage or low frequency.

For G in Column 34:
Drop generation on buses identified in Columns 35-46 and 49-60.

Entering nothing will drop all generation if there is only one machine on the bus, or entering the machine (ID) identification as entered on Card Type M in Column 16 will drop a particular machine on a bus having more than one machine. If there is more than one machine on the bus, no entry is an error.

Columns 75-80 are blank.

RESISTANCE BRAKE DESCRIPTION

Brake Application

Card format RB provides one of two schemes for determining brake insertion and also includes data for normal disconnection after a predetermined time. One or more such cards can be used to operate the same brake from various locations. The card which produces the first "on" signal takes over complete control of the brake unit until the operation cycle is complete.

The brake designated at bus NAME3 KV3 (refer to page 7-13) having a specified power rating (PBRAKE) is inserted after an insertion delay (TINSRT) once it has been determined that the voltage at bus NAME2 KV2 dropped below a specified level (VDROP) and the processed power from line NAME1 KV1 -- NAME2 KV2 has dropped by a specified amount (PDROP) or greater.

Default value of VDROP (10^{10}) removes bus voltage as a condition for brake insertion. Default value of PDROP (10^{10}) prevents brake insertion due to RB card under all circumstances.

The brake is disconnected following TMAX cycles and not allowed to accept a signal to reinsert again from any source until TMIN cycles further have elasped.

The brake insertion will not be permitted to take place if the initial power on line NAME1 KV1 -- NAME2 KV2 is below the bias power level (PBIAS).

More than one brake can be controlled at bus NAME3 KV3 and these are identified be the brake ID. Each different brake must have a separate brake control card type RB.

TW corresponds to the reset time constant used in processing the power signal from line NAME1 KV1 -- NAME2 KV2.

The processing block can be treated as a differentiator if desired using a small value of TW and multiplying the normal power drop value by TW prior entering it on the card.

Card format RC provides the second scheme for establishing brake insertion which is based on estimated rotor speed.

This insertion is independent of the first scheme described above using the RB card; however, once inserted, it follows same disconnection criteria as the first scheme. Default value of FINS (10^{10}) prevents brake insertion due to the RC card.

Early Brake Disconnect

Card format RC in addition to providing the second brake insertion scheme can be used for early disconnect based on the rate-of change or integral of a prescribed measured power.

The brake designated at bus NAME3 KV3 (RC card) is disconnected following a time delay (TDISC) once it has been determined that a processed signal (described below) drops below a specified threshold (FDISC) and the acceleration power estimate is not greater than zero and elapsed problem time is at least equal to TBLOCK.

If the above criteria are not satisfied then the brake is disconnected at the elapse of maximum duty time (TMAX).

The processed signal is the output of a block whose input is the power on line NAME4 KV4 -- NAME5 KV5.

This block can be used for estimating rotor speed from reset plant power (as done at El Chocon in Argentina) or for estimating rate-of-change of ac intertie power as may be done for early disconnect of the Chief Jospeh brake.

An estimate of rotor speed is done using the Alternate 1 control blocks shown with the RC card, page 7-14. M and D are the inertia constant and damping constant associated with the chosen generator.

An estimate of rate-of-change of ac intertie power is obtained using the the Alternate 2 control blocks shown with the RC card, page 7-14.

A bias term (PCBIAS) is also included on the RC card to prohibit brake insertion on the basis of low power level on line NAME4 KV4 -- NAME 5 KV5. For example, the Chief Joseph brake is not operated if ac intertie power is below 800 MW south. Both the bias on the RB and on the RC cards must be satisfied for operation.

GUIDELINES FOR USE OF RB AND RC CARDS

1. Up to 5 RB and 5 RC cards may be used.

2. More than one RB card may be used to control a particular brake.

3. RB card may be used by itself, and if a corresponding RC card is also used it must be placed immediately following its respective RB card.

4. When zero is entered (or blank field) for the following time values a default value of one time step is assumed:

   TMIN, TINSRT, TDISC, TBLOCK

5. When zero is entered (or blank field) for any of the following, the program will be automatically terminated!

   TW, TMAX, PBRAKE, T_2, M

6. When punched zero is entered for VDROP and/or PDROP the program is automatically terminated.

7. Blank field entry implies default value of 10^{10} for PDROP, VDROP, FINS.

BONNEVILLE POWER ADMINISTRATION

FORTRAN CODING FORM

Requested by _____ Ext No. _____ Job code _____ Project _____ Sheet ____ of ____

Statement No. | CONT | STATEMENT | Identification

RESISTANCE BRAKE

RB	NAME 1	KV1	NAME 2	KV2	PAR	NAME 3	KV3	ID	PBRAKE	PDROP	VDROP	TW	TMAX	TMIN	TINSRT	PBIAS
	A8	F4.0	A8	F4.0		A8	F4.0		F5.1	F5.1	F4.3	F3.1	F4.1	F4.1	F4.2	F5.1
1	7	15	20	28	32	34	42	46	47	52	57	61	64	68	72	76

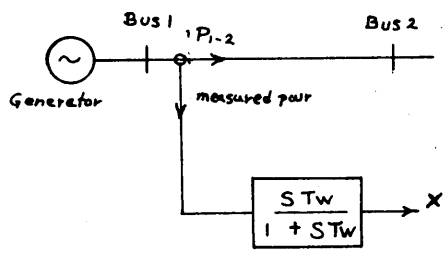

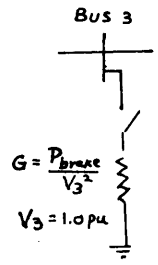

PBRAKE	brake power in MW. Program uses conductance value computed from nominal bus voltage (KV 3).
PDROP	power drop at BUS 1 required for brake insertion (MW). Blank field defaults to 10^{10}.
VDROP	voltage at BUS 1 must drop to this value for brake insertion (pu). Blank field defaults to 10^{10}.
TW	washout time constant. Use of small value (0.1 sec) allows approximate differentiation of line power (second).
TMAX	brake duty time, or maximum time the brake is permitted to operate continuously. (cycles)
TMIN	minimum time that must elapse between a brake disconnection and acceptance of signal for next insertion. (cycles)
TINSRT	brake insertion time covering relaying, communication and circuit breaker delay.
PBIAS	minimum initial power to permit brake application (MW).

Brake Insertion:

Insert brake if all of these conditions are met.

- $X \geq$ PDROP $> 0.$
- $V_2 <$ VDROP
- $P_{1-2} \geq$ PBIAS (initial condition check only)
- $P_{4-5} \geq$ PCBIAS * (initial condition check only)

Brake Removal:

Disconnect if $t \geq$ TMAX

*Include only if companion RC card is used.

7-13

REV 7/28/75 ; 1/20/76, 7/20/76

BONNEVILLE POWER ADMINISTRATION

FORTRAN CODING FORM

Requested by _____ Ext No. _____ Job code _____ Project _____ Sheet ____ of ____

Statement No. | CONT | STATEMENT | Identification

RESISTANCE BRAKE

EARLY DISCONNECT

RC		NAME 4	KV4		NAME 5	KV5	PAR	NAME 3	KV3	ID	T1 / M	T2 / D'	T3	TDISC	FDISC	FINS	TBLOCK	PCBIAS
		A8	F4.0		A8	F4.0		A8	F4.0		F4.2	F4.2	F4.2	F4.2	F5.4	F5.3	F4.1	F4.0

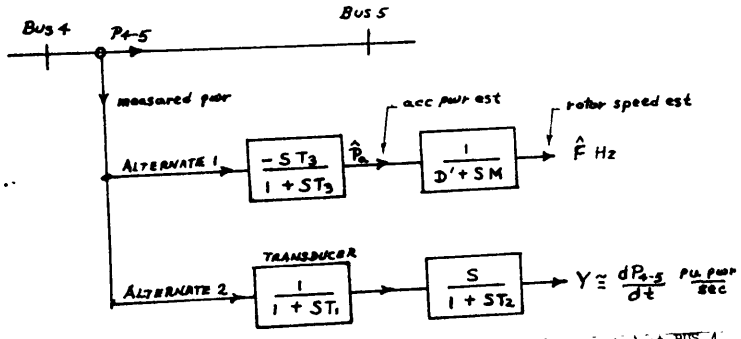

M	inertia constant of an equivalent machine connected at BUS 4.
EMWS	see machine data card, page 2-2.
D'	damping torque constant of an equivalent machine connected at BUS 4
D	see machine data card, page 2-2.
T_3	time constant used in the differentiation function in alternate # 1. (seconds)
T_1, T_2	time constants used in the definition of control function of alternate # 2. (seconds)
FDISC	early brake disconnect frequency threshold value. (Hz)
FINS	brake insertion frequency threshold. (Hz) (see RC Card) blank field defaults to 10
TBLOCK	minimum problem time that must elapse before early disconnect feature from RC card becomes operative. (cycles)
PCBIAS	minimum initial power on branch BUS 4 -- BUS 5 to permit brake operation. (MW)
TDISC	brake disconnection time covering relaying, communication and circuit breaker delay. (cycles)

Alternate 1: Rotor speed estimate for brake disconnect

Disconnect if $\hat{P} \leq$ FDISC and $t \geq$ TBLOCK and $\hat{P}a \leq 0$

$$M = \frac{2 \cdot EMWS}{100 \cdot 60} \text{ pu sec/radian Hz}$$

$$D' = \frac{(D \text{ from machine card})(\text{rated power in MW})}{100 \cdot 60}$$

T_3 = seconds

FDISC = Hz

PCBIAS = MW (see RB card)

TBLOCK = cycle

Insert if $\hat{P} \geq$ FINS

Buses 4 and 5 should be the same as Buses 1 and 2. Parameters for M and D' are taken from total generation connected as Bus 1.

Alternate 2: Tie-line differentiation

Disconnect if $Y \leq$ FDISC and $t \geq$ TBLOCK

T_1, T_2 = seconds

LDISC = pu power/sec

PCBIAS = MW (see RB card)

TBLOCK = cycle

REV 7/20/76

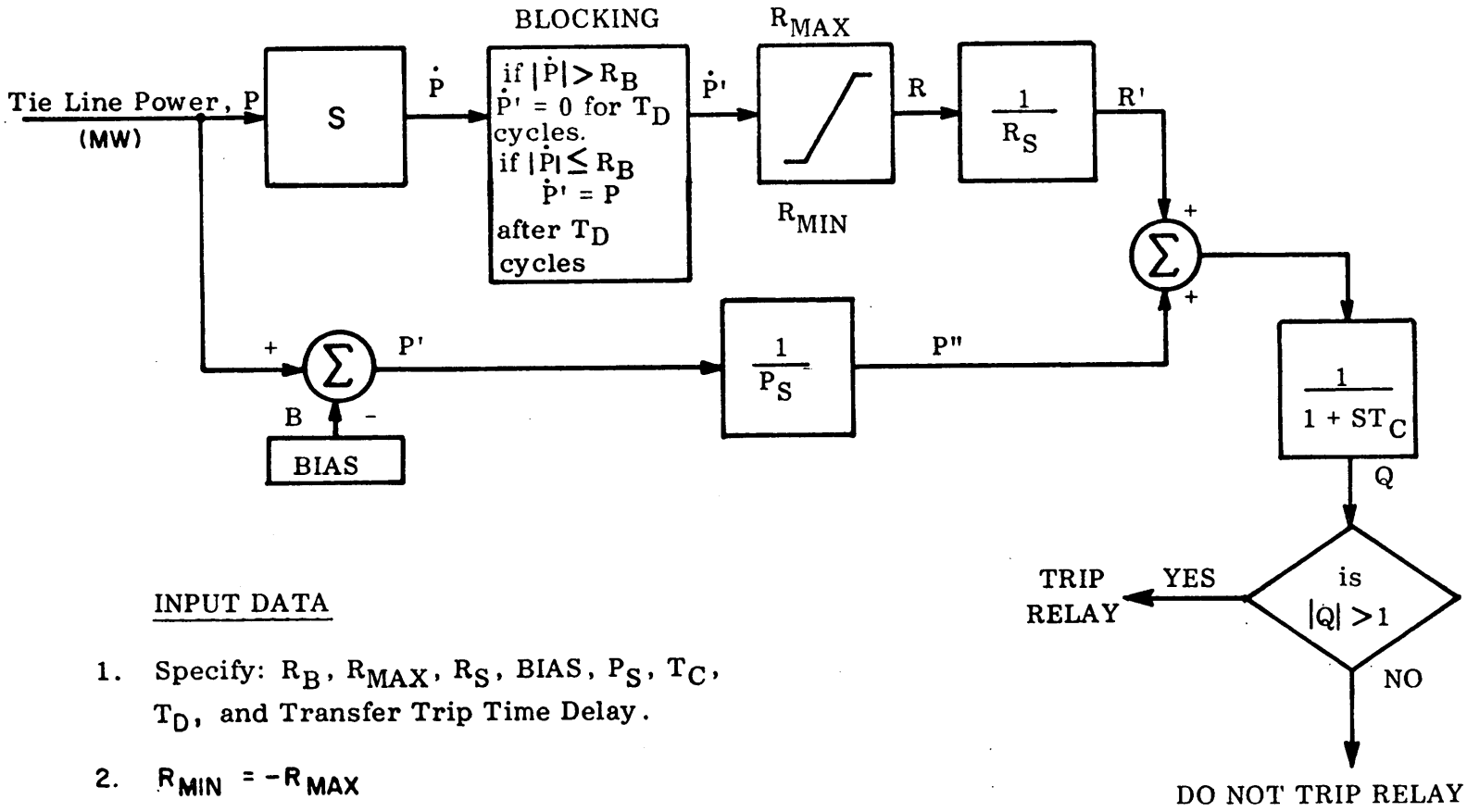

INPUT DATA

1. Specify: R_B, R_{MAX}, R_S, BIAS, P_S, T_C, T_D, and Transfer Trip Time Delay.

2. $R_{MIN} = -R_{MAX}$

WSCC STABILITY PROGRAM RATE OF CHANGE OF POWER RELAY MODELS	
WSCC TYPE 2	FIGURE 2 APRIL 1974
97 RC MODEL 2	

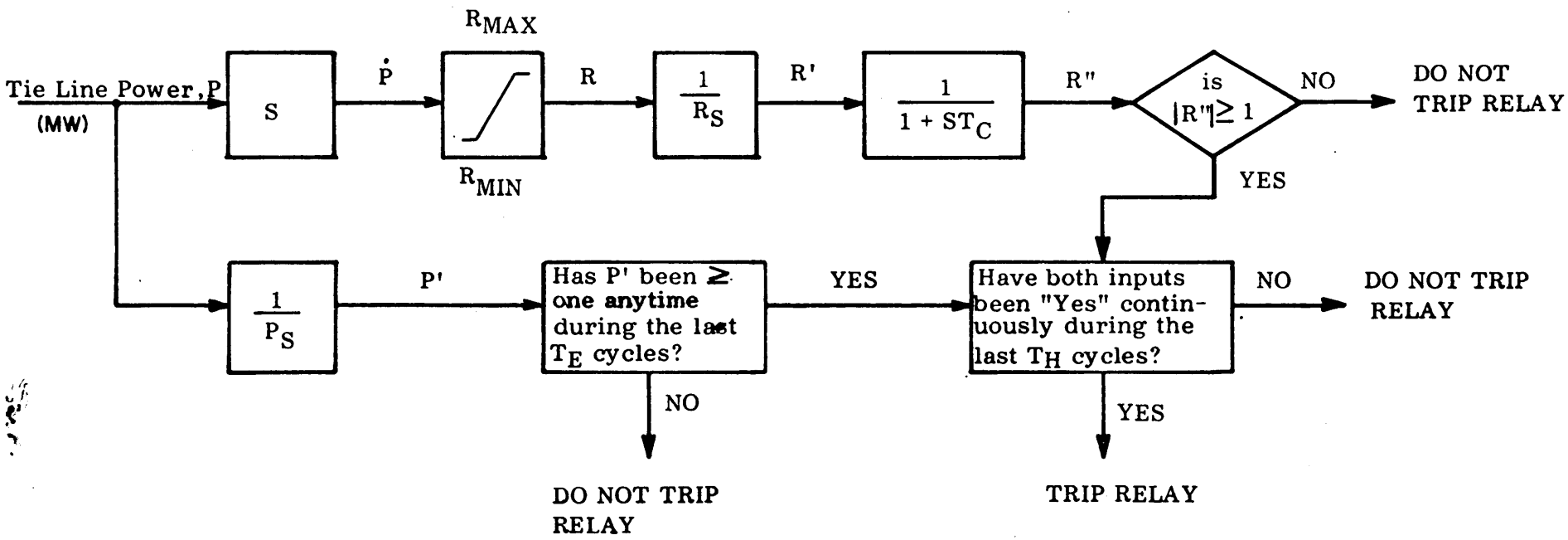

INPUT DATA

1. Specify: R_{MAX}, R_{MIN}, R_S, P_S, T_C T_E, T_H, and Transfer Trip Time Delay.

WSCC STABILITY PROGRAM RATE OF CHANGE OF POWER RELAY MODELS	
WSCC TYPE 3	FIGURE 3 APRIL 1974
97 RC MODEL 3	

TYPE 3

Except as noted below the assumptions for the type 3 relay are the same as those for the type 1 relay.

1) The time setting on the enable hold timer is set equal to the enable hold time delay any time $|P'_2|$ is greater than or equal to one. If $|P'_2|$ is less than one the time setting is decreased by Δt

   If $|P'_2| \geq 1$, $TIM_2 = T_D$

   If $|P'_2| < 1$, $TIM_2 = TIM_1 - \Delta t$ where

   P'_2 is the value of P' at the end of the time step,

   P' is defined in figure 3,

   TIM_1 is the time setting at the beginning of the time step,

   TIM_2 is the time setting at the end of the time step,

   T_D is the enable hold time delay,

   Δt is the size of the AC network time step.

2) If both of the following conditions exist at the end of the time step the time setting $TAUX_2$ on the auxiliary timer is increased by Δt. Otherwise, $TAUX_2$ is set equal to zero.

   a) The output of the integrator is greater than or equal to one.

   b) The time setting TIM_2 is greater than zero.

3) The relay operates if the time setting $TAUX_2$ is greater than or equal to the auxiliary relay time delay.

HVDC Models

The BPA program allows both two-terminal and multiterminal HVDC lines to be studied. The user selects which model is to be used by entering the desired line configuration in the power flow input data. The following options are available:

Fully represented two-terminal HVDC model. A 'D' card is required for the rectifier and for the inverter. The model uses a constant extinction angle control (CEA) and margin switching is available. Any modulation model (DS card) may be used with this model. Two terminal line switching cards are used to simulate disturbances on the two-terminal model.

Simplified two-terminal HVDC model. A 'DT' card is required for the rectifier and the inverter. This model assumes a perfect control system for the DC terminals. Constant extinction angle control is used and margin switching is available. Modulation and line switching cards are not presently available for this model.

Fully represented multiterminal DC line model. A 'D' card is required for each rectifier and inverter. No margin switching is available. Any modulation model (DS card) may be used with this model. The detailed VDCL characteristics (DC card) and the DC voltage control (DV card) may also be used with this model. The multiterminal model uses a constant beta control scheme; however, this may be changed to a constant extinction angle control by adding an 'A' to column 2 of the 'D' card. Multiterminal line switching cards may be used with this model to simulate disturbances on the multiterminal system.

All DC models use the same DC output card (page 14-2)

Requested by _____ Ext No. _____ Job code _____

BONNEVILLE POWER ADMINISTRATION

FORTRAN CODING FORM

Project _____ Sheet ____ of ____

Statement No.	CONT	STATEMENT																Identification
P		NAME	KV	TK	TV	T1	T2	T3	KA	MODE	IMAX	IMARGIN	ASTOP	TD			VLIM	MSU

TWO TERMINAL DC CONTROL DIAGRAM

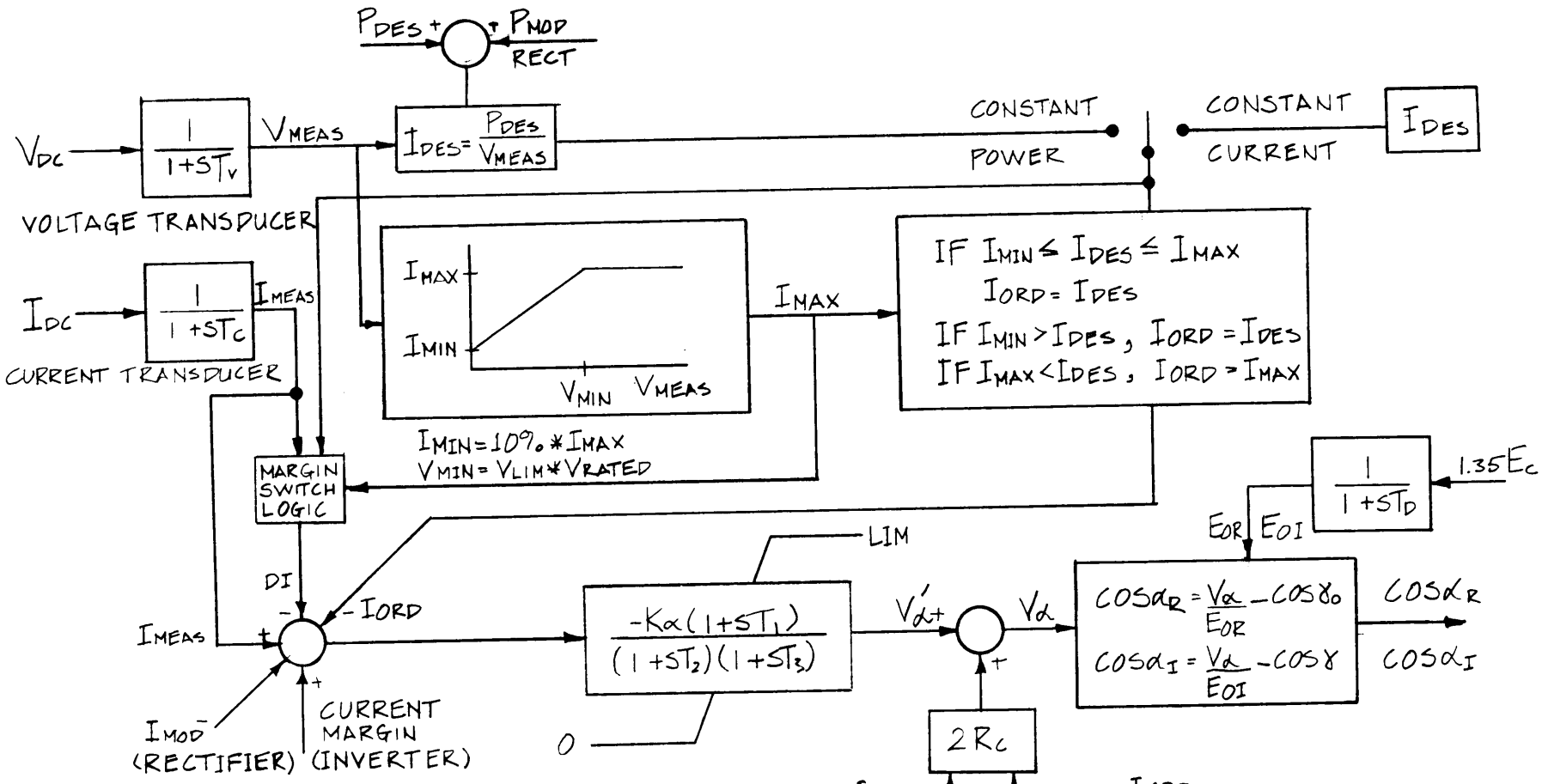

$LIM = E_{OR}(\cos\gamma_0 + \cos\alpha_{MIN}) - 2 I_{MEAS} R_C$ (RECT)

$LIM = E_{OI}(\cos\gamma + \cos\alpha_{STOP}) - 2 I_{MEAS} R_C$ (IVERT)

DISABLING THE DC REPRESENTATION

If DC lines are represented in the power flow used for a transient stability study, the lines must also be represented in the transient stability data deck. There may be occasions when the user wishes to disable the DC representation for a stability study without running another power flow. In order to do this the user can enter a nonblank in column 79 of the 'D' card which will tell the program to disable the converter. The program will convert the initial real and reactive power flow into the converter bus into an equivalent bus load at that bus and disable the converter control system. A rectifier will be converted to a positive load and an inverter into a negative load.

When using the disable function the following points should be kept in mind:

1. Both multi-terminal and two-terminal converters can be disabled.

2. All converters on a line must be disabled or a fatal error exists.

3. Load NETTING [redacted] cards are still required for all disabled converters.

4. Load representation cards can be used to model the equivalent bus loads at the disabled converters.

5. DC output cards cannot be used for a disabled converter. The converter bus is treated as a normal AC load bus.

TRR 03/06/87

DC Tie Control Data

Column Description for DC Tie Control Data

Column	Format	Description
1		Card Type - D
4-15		NAME - Indicates the name of the bus on the DC side of the commutating transformer.
16-20		T_C - Current measuring circuit time constant in seconds.
21-25		T_V - Voltage measuring circuit time constant in seconds.
26-30		T_1 - Current regulator time constant in seconds.
31-35		T_2 - Current regulator time constant in seconds.
36-40		T_3 - Current regulator time constant in seconds.
41-45		K_a - Current regulator gain in per unit DC voltage divided by per unit DC current.
46		Control Mode: P = Constant Power Control I = Constant Current Control
47-50		I_{MAX} - value overload current capability in per unit.
51-56		I_{MARGIN} - Current margin in per unit.

One per unit voltage is equal to the voltage specified in the bus name multiplied by the number of bridges multiplied by three times the square root of two divided by PI. One per unit current is equal to the bridge current rating.

61		$ALPHA_{STOP}$ - Minimum firing angle in degrees for operation of this station as an inverter. The minimum firing angle for rectifier operation is specified in the power flow data.

62-66	T_D - Commutating voltage time constant in seconds.
72-74	VLIM - percent of rated terminal voltage where current limiting begins.
80	MSU - Margin switching unit key. A zero of blank indicates that this station has a margin switching unit. Otherwise a margin switching unit is assumed not to exist for this station.

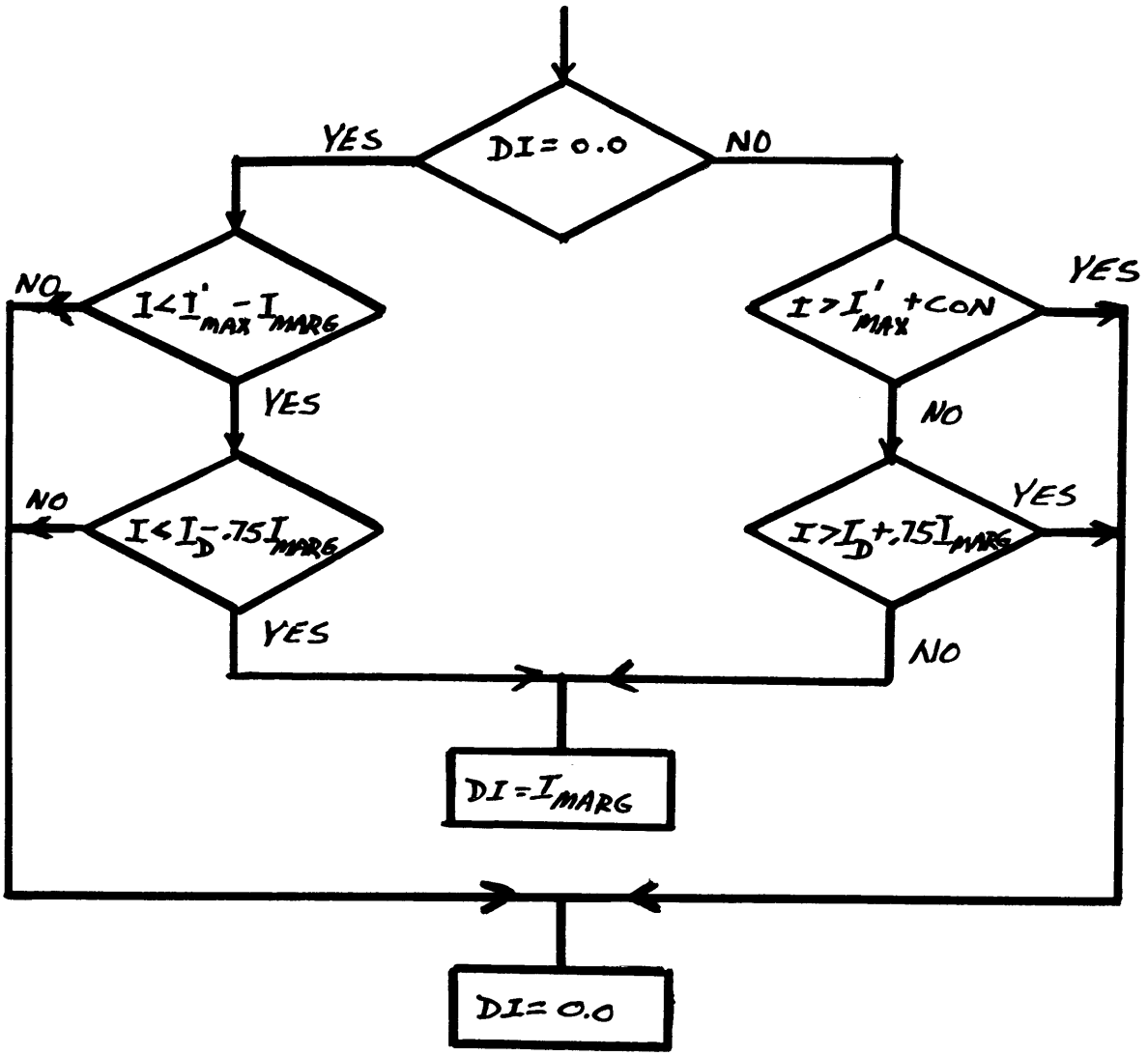

MARGIN SWITCHING UNIT

DI is initially set equal to zero. DI remains equal to zero for the first 0.25 seconds at which time the above logic is executed to determine if the value of DI needs to e changed. The "new" value of DI is then used for the next 0.5 seconds. At 0.75 seconds and at the end of every 0.5 second interval following 0.75 seconds the above logic is executed to update the value of DI. DI is kept constant during the 0.5 second intervals. CON = 72 amperes.

TRR 10/1/86

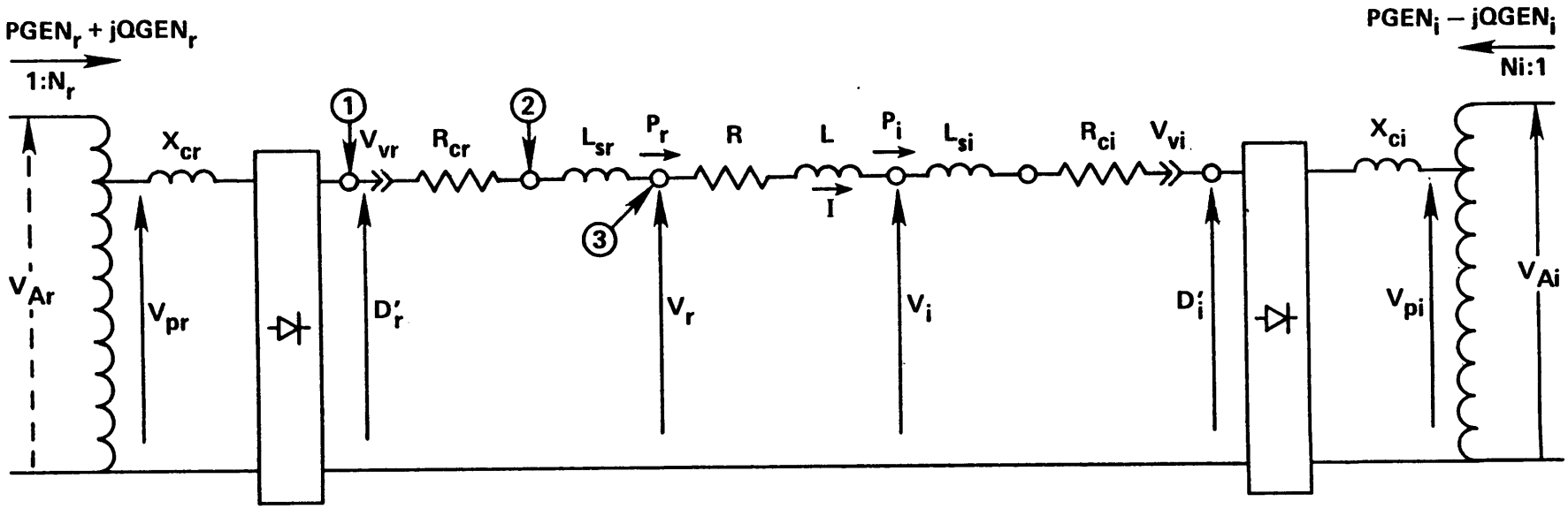

$$E_r = \frac{3\sqrt{2}}{\pi} N_r V_{AR} = \frac{3\sqrt{2}}{\pi} V_{pr}$$

$$\cos\gamma_r = \frac{IX_{cr}}{\sqrt{2}V_{pr}} - \cos\theta_r$$

$$E_i = \frac{3\sqrt{2}}{\pi} N_i V_{Ai} = \frac{3\sqrt{2}}{\pi} V_{pi}$$

$$\cos\beta_i = \cos\theta_i - \frac{IX_{ci}}{\sqrt{2}V_{pi}}$$

$$D'_r = E_r \cos a - \frac{3I}{\pi} X_{cr}$$

$$PGEN_r = D'_r I$$

$$D'_i = E_i \cos\gamma - \frac{3I}{\pi} X_{ci}$$

$$PGEN_i = D'_i I$$

$$\cos\theta_r = D'_r / E_r$$

$$\cos\theta_i = D'_i / E_i$$

$$I'' = (E_r \cos a_{MIN} - E_i \cos\gamma_{MIN} - V_{vr} - V_{vi})/R_{TOT}$$

$$I''' = (E_r \cos a_{MIN} + E_i \cos a_{STOP} - V_{vr} - V_{vi})/R_{TOT}$$

WHERE $R_{TOT} = R + R_{cr} + R_{ci} + \frac{3}{\pi}(X_{cr} - X_{ci})$

WSCC STABILITY PROGRAM TWO–TERMINAL DC LINE MODEL	
DC LINE	FIGURE 1
	JULY 1, 1983

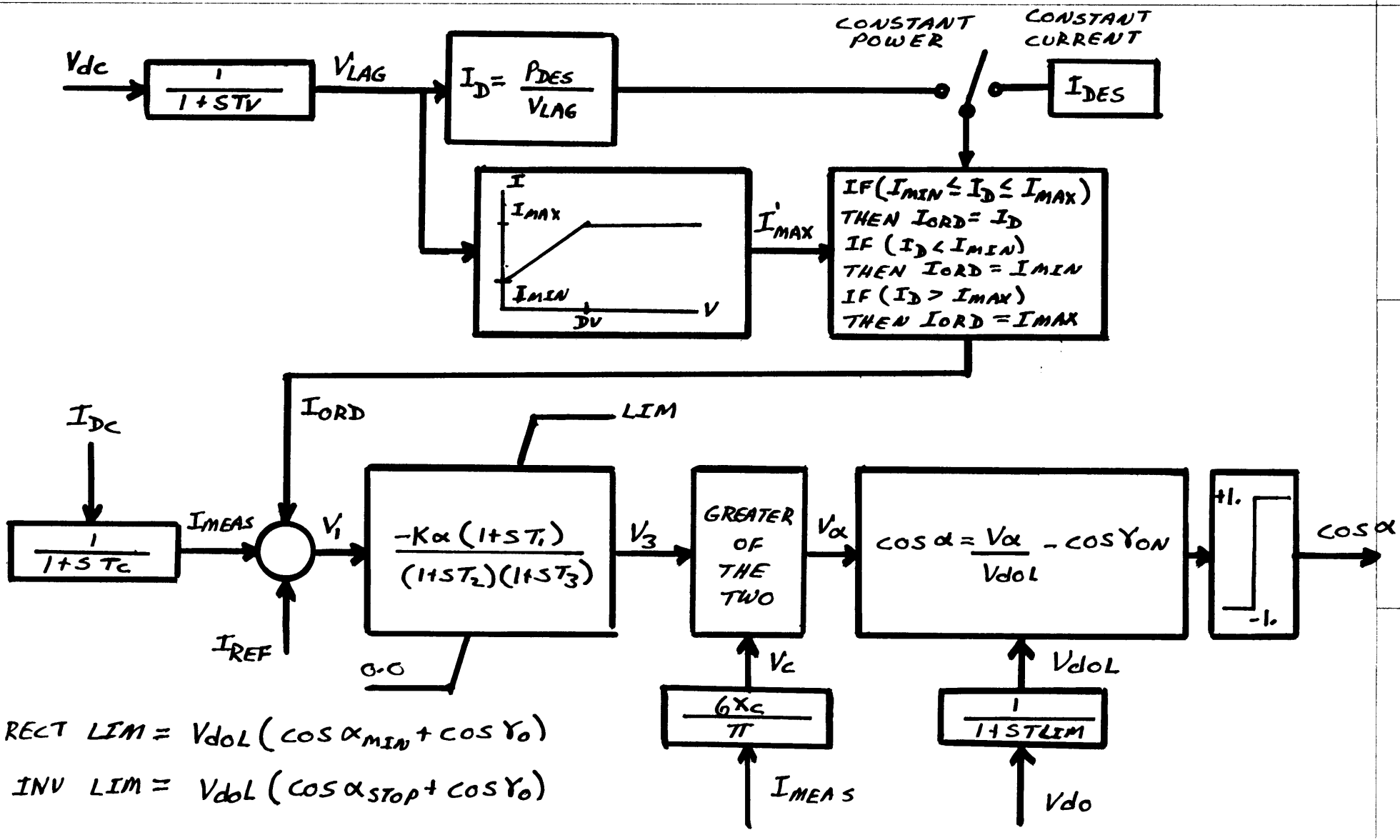

RECT LIM = $V_{doL}(\cos\alpha_{MIN} + \cos\gamma_0)$

INV LIM = $V_{doL}(\cos\alpha_{STOP} + \cos\gamma_0)$

MTDC CONTROL SYSTEM FOR RECTIFIERS AND INVERTERS WITHOUT CURRENT MARGIN

TRR 9/26/86

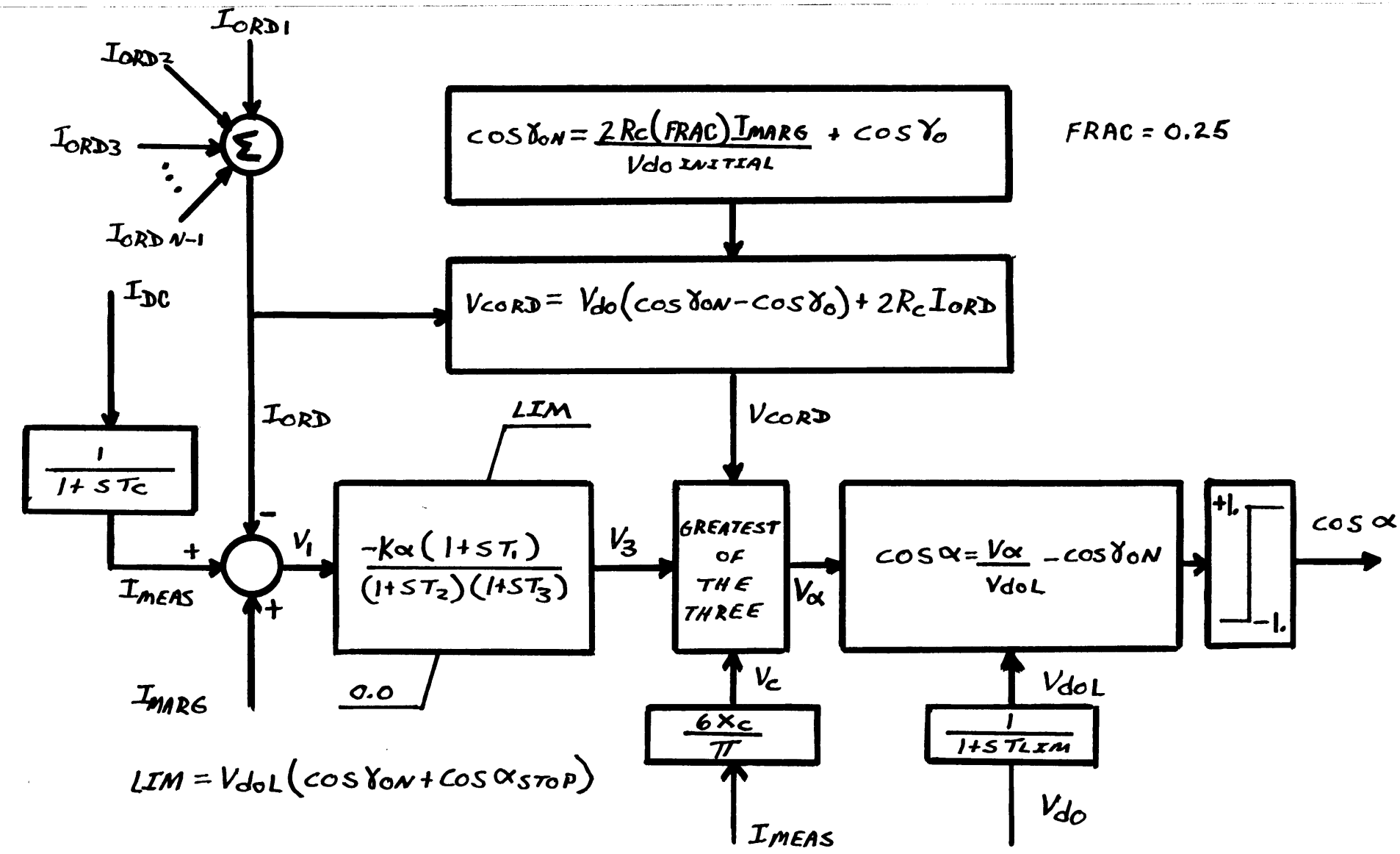

MTDC CONTROL SYSTEM FOR TERMINAL WITH CURRENT MARGIN

TRR 9/26/86

BONNEVILLE POWER ADMINISTRATION
FORTRAN CODING FORM

Requested by _____ Ext No. _____ Job code _____ Project _____ Sheet ____ of ____

Statement No.	CONT	STATEMENT	Identification
DC		NAME KV Y0 Y1 V1 V2 VC1	
		DETAILED VDCL AND MODE CHANGE CARD MULTI-TERMINAL	

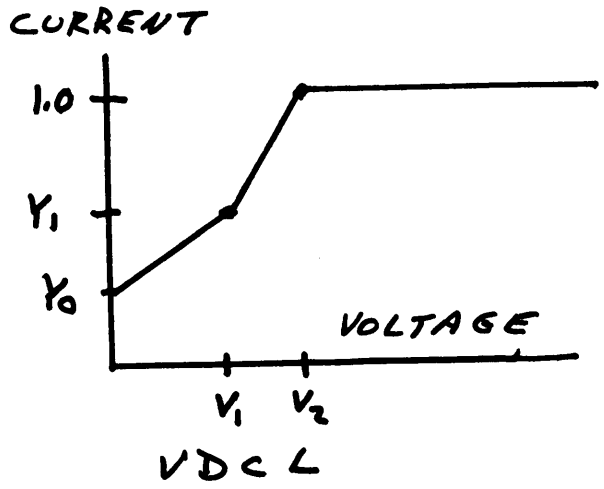

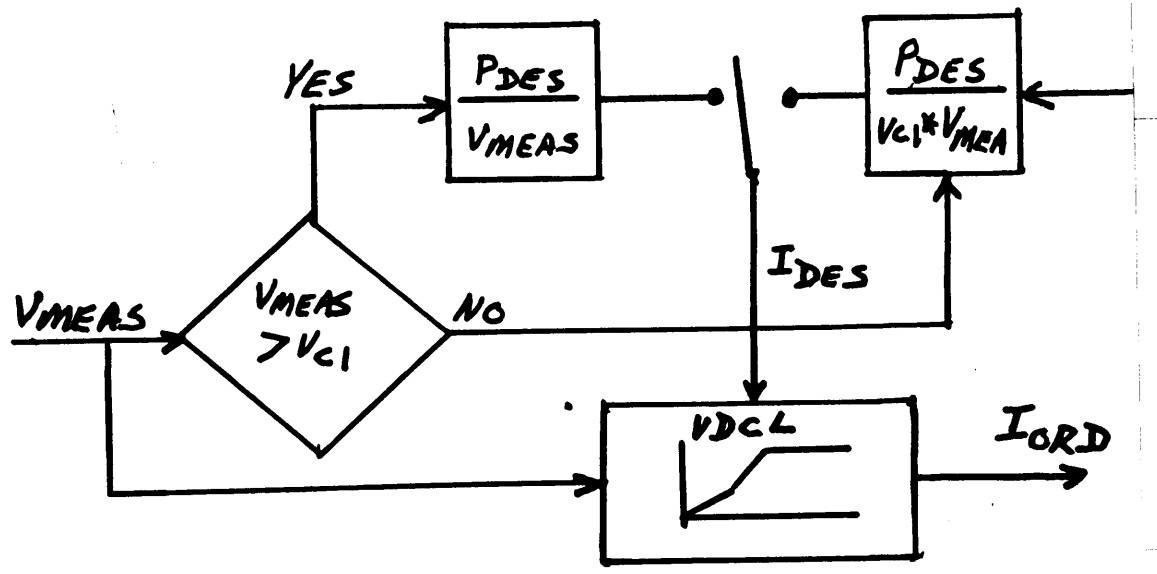

Y_1, Y_0 PER UNIT CURRENT ON RATED CURRENT BASE

V_1, V_2 PER UNIT VOLTAGE ON RATED VOLTAGE BASE

MODE CHANGE

V_{C1} PU RATED DC VOLTAGE BELOW WHICH MODE IS CHANGED TO CONSTANT I FROM CONSTANT P

TRR 9/17/86

BONNEVILLE POWER ADMINISTRATION
FORTRAN CODING FORM

Requested by _____ Ext No. _____ Job code _____ Project _____ Sheet ____ of ____

Statement No.	CONT	DC VOLTAGE CONTROL CARD - MULTITERMINAL MODEL	Identification
DV		NAME KV VDREF RCOMP	

V_{dref}	F5.4	DESIRED VOLTAGE IN KV
R_{comp}	F4.4	COMPOUNDING RESISTANCE IN OHMS

DEFAULT VALUE:

$$V_{dref} = (E_{OR}\cos\alpha - R_{cr}I - D_r) - R_{comp}I \quad \text{RECT}$$
$$= (-E_{OI}\cos\alpha - R_{ci}I + D_i) + R_{comp}I \quad \text{INV}$$

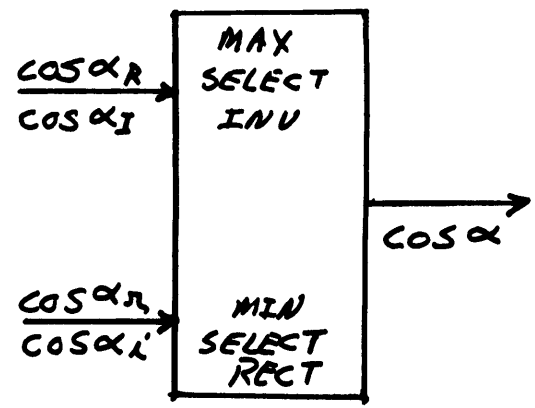

CONSTRAINTS:

$$V_{dref} \geq E_{OR}\cos\alpha - R_{cr}I - D_r - R_{comp}I \quad \text{RECT}$$
$$\geq -E_{OI}\cos\alpha + R_{ci}I + D_i + R_{comp}I \quad \text{INV}$$

CALCULATIONS:

$$\cos\alpha_r = \left[V_{dref} + I\left(\tfrac{3}{\pi}X_c + R_{comp}\right) - D_r\right]/E_{OR} \quad \text{RECT}$$
$$\cos\alpha_I = \left[-V_{dref} + I\left(\tfrac{3}{\pi}X_c + R_{comp}\right) + D_i\right]/E_{OI} \quad \text{INV}$$

TRR 9/17/86

2.2 DC Voltage Limiter

The WSCC model was investigated to see if some form of dc voltage control could be readily incorporated within the constraints of "simple" modifications. Most dc control systems establish a dc voltage reference by a combination of inverter tap changer control and constant extinction angle (γ) control. With this type of control the dc voltage can be regulated to within typically ±1% dependent on the inverter tap step size.

At least one manufacturer has adopted a control philosophy which adjusts "γ" directly providing "fine" control of dc voltage. The tap changer control takes on a function similar to rectifier tap changer control, maintaining the extinction angle "γ" within upper and lower steady state limits.

During the course of the stability studies it was felt that it would be desirable to explore the impact of constant voltage control on the behavior of the integrated ac-dc systems.

In order to incorporate this type of control into the program it was necessary to examine the modelling philosophy used in the program. Reviewing figure (1) it is apparent that the dc model is simulated in a fashion which is similar to actual dc control, ie: the controller establishes the firing angles and the ac system voltages together with the converter firing angles establishes the dc voltage.

To simulate fast acting dc voltage control it becomes simply a matter then to establish the firing angle which together with sensed ac system voltages will give the desired firing angle.

Considering the sketch below:

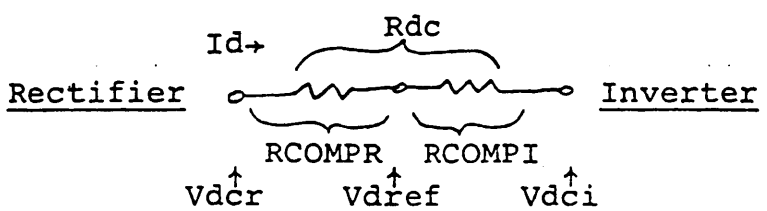

it is desirable to control the dc voltage at some reference location along the dc line. The reference location could be the rectifier station, it could be the inverter station or it could be at any point along the dc line.

If one considers control of dc voltage from the inverter and if one defines "RCOMPI" to be the dc line resistance from the inverter station to the reference location, then the dc voltage at the reference location would be:

$$Vdref = Vdci + Id \times RCOMPI \qquad (11)$$

or the inverter voltage required to achieve Vdref could be expresed as:

$$Vdci = Vdref - RCOMPI \times Id \qquad (12)$$

Knowing the relationship between inverter firing angle (αi) and dc voltage

$$Vdci = -\left[Eo \cos \alpha i - \left(\frac{3}{\pi}\right) XciId\right] \qquad (13)$$

then the two equations can be equated to determine the firing angle required to achieve the reference voltage "Vdref".

ie. $$Eo \cos \alpha i - \left(\frac{3}{\pi}\right) Xci\ Id = - Vdref + RCOMPI \times Id$$

or: $$\cos \alpha i = \frac{\left[\left(\frac{3}{\pi}\right) Xci + RCOMPI\right] Id - Vdref}{Eo} \qquad (14)$$

8-9

The dc voltage controller above would be constrained by other firing angle limitations. For example, the firing angle controller in practice would not allow the extinction angle to go below some minimum value. As discussed earlier minimum extinction angle control is simulated in the WSCC model by the lower limit on the "Kα" block diagram.

Several methods of incorporating the dc voltage controller into the program were considered.

The solution which was eventually adopted was to compute the firing angle required for dc voltage control in parallel with the firing angle required for minimum extinction angle control, selecting the actual firing angle to be the lesser of the two (ie. the maximum of the cosine of the angle). This method limits the resultant extinction angle to "γ min" when required by ac-dc operating conditions, but at the same time allows dc voltage control when ac and dc system conditions permit this type of control. The effect on dc system performance is to limit the dc voltage at the selected reference location to the specified value.

As the WSCC program uses a single block of code to simulate a converter (be it a rectifier or inverter) dc voltage control by the rectifier firing angle was also automatically implemented. Changes in logic required for the rectifier control was simply a matter of selecting the minimum of the cosines of the firing angles for the two parallel controllers.

The WSCC program selects the minimum extinction angle for each inverter as the initial load flow extinction angle. Means of introducing a user defined minimum "γ" in the stability program were investigated. A user defined minimum "γ" would allow the use of dc control of voltage over a broader range of operating conditions. To incorporate this level of modification would require a complete restructuring of the firing angle calculations within the program (particularly in the initialization segment of the program) and was felt to be beyond the scope of "simple" modifications.

The block diagrams for the modified WSCC dc model are included in the attached correspondence.

R.S. Burton
June 15, 1983

8-10

WSCC STABILITY PROGRAM
INPUT FORMAT
SIMPLIFIED TWO-TERMINAL DC LINE DATA

ORGANIZATION_____
PROJECT_____
SHEET____ OF ____ DATE_____

TIE CONTROL	D	T		NAME	KV	P I		DV		IMAX	IMARG				T_C	T_v	αSTOP		MSU
COMMENTS	1	2	3	4 - 15	16	17	18	28 - 32	33	38 - 42	43 - 47	48	49	50	63 - 67	68 - 72	73 - 77	78	80

COLUMN	DESCRIPTION
1 - 2	DT - Card type
4 - 15	NAME - The name of the bus on the DC side of the commutating transformer.
17	Control Mode - P = Constant Power Control I = Constant Current Control
28 - 32	DV(VLIM) - Valve overload cutoff voltage in p.u.
38 - 42	IMAX - Valve overload current capability in p.u.
43 - 47	IMARG - Current Margin in p.u.
63 - 67	Tc - Current measuring circuit time constant in seconds.
68 - 72	Tv - Voltage measuring circuit time constant in seconds.
73 - 77	- Minimum firing angle in degrees for operation of this station as inverter. The minimum firing angle for rectifier operatioon is specified in Power Flow data.
80	MSU - Margin Switching Unit key. A zero (only zero !) indicates that the station has a MSU. Otherwise MSU is assumed not to exist. Note that this field does not exist in WSCC's card.

Fig. 5 : Input Data Format Card for Simplified DC Line Model

July 29 , 1986

SIMPLIFIED 2 TERMINAL DC LINE MODEL FOR TSP

This report describes the implementation of the simplified 2 terminal dc line model proposed by WSCC and EPRI into BPA's Transient Stability Program (TSP). The model, input card, test results , and conclusions about the use of the model are the main sections of the report.

1. The Model

The simplified model is based on the equivalent circuit representation of a 2 terminal dc line given in Fig.1 (see App.B for details) and the BPA's generalized controller model given in Fig.2. These two models together constitute the full model for a line under consideration. The reader is assummed to have familiarity with the full model.

The basic assumption behind the simplified model is based upon the fact that the dc controllers which control the dc line current are in general much faster than the machine controllers (governors). Therefore dc system response to a disturbance is much faster than that of the machines. Simplified dc model exploits this property by assumming that the current controller (CC) in dc controller is ideal. Hence the the dynamics of CC can be eliminated and it can be assumed that the dc line current, Id, will be equal to the ordered current setting , Iord, of the controller in charge (i.e., if rectifier CC is active then Id = Iordr, or if inv. CC is active then Id = Iordi = Iordr - Imarg)

Finally, the problem of determining the current control scheme (which CC is active) can be solved by using the steady state controller characteristics of the controlers. As shown in Fig.3, there are three basic operating schemes.

i) Rectifier Control Mode : CC - CEA Control
Normally controlers are set such that controller at the rectifier end controls the line current (CC control) and the controller at the inv. end keeps the extinction angle, γ_i constant (CEA control). Therefore for this mode Id = Iordr and $\gamma_i = \gamma_o$ (minimum extinction angle).

ii) Inverter Control Mode : CIA - CC Control
Whenever rectifier controller hits its upper limit, ignition angle, α_r is set to its min value (Constant Ignition Angle - CIA control) and CC on inv. takes control. Therefore under this mode of operation Id = Iordi and $\alpha_r = \alpha_o$ (minimum ignition angle)

iii) Transition Mode : CIA - CEA Control
This is control scheme when both current controllers are at their limits (rect. at CIA and inv. at CEA control). As a result the dynamics of the line during this period is solely determined by the eguivalent circuit of Fig.1. Therefore, $\alpha_r = \alpha_o$, $\gamma_i = \gamma_o$ and

$$Id = i_T = \frac{1}{1+T_L s} I_{DC}$$

Where,

$$T_L = R_T/L_T = (R_{cr}+R_{eqr}+R_L-R_{ci}+R_{eqi})/(L_{sr}+L_L+L_{si})$$

$$I_{DC} = (V_{dor}\cos\alpha_o - V_{doi}\cos\gamma_o - 2V_D)/R_T$$

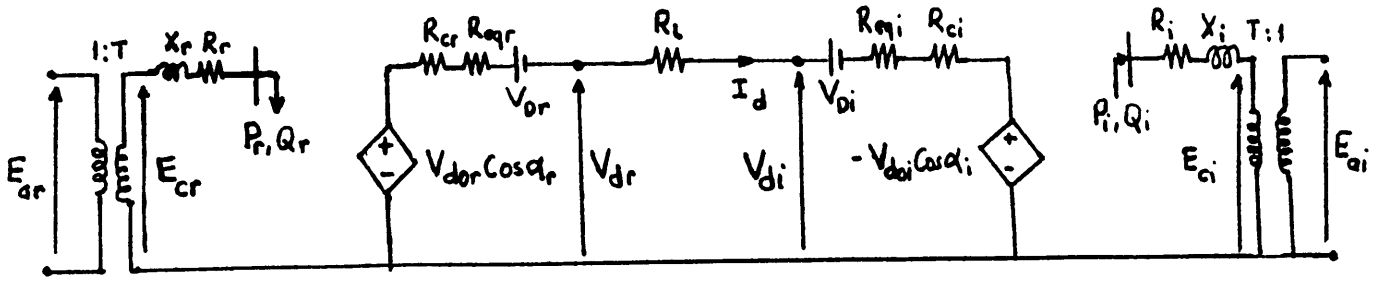

Fig. 1 : Equivalent Circuit of a 2 Terminal DC Line

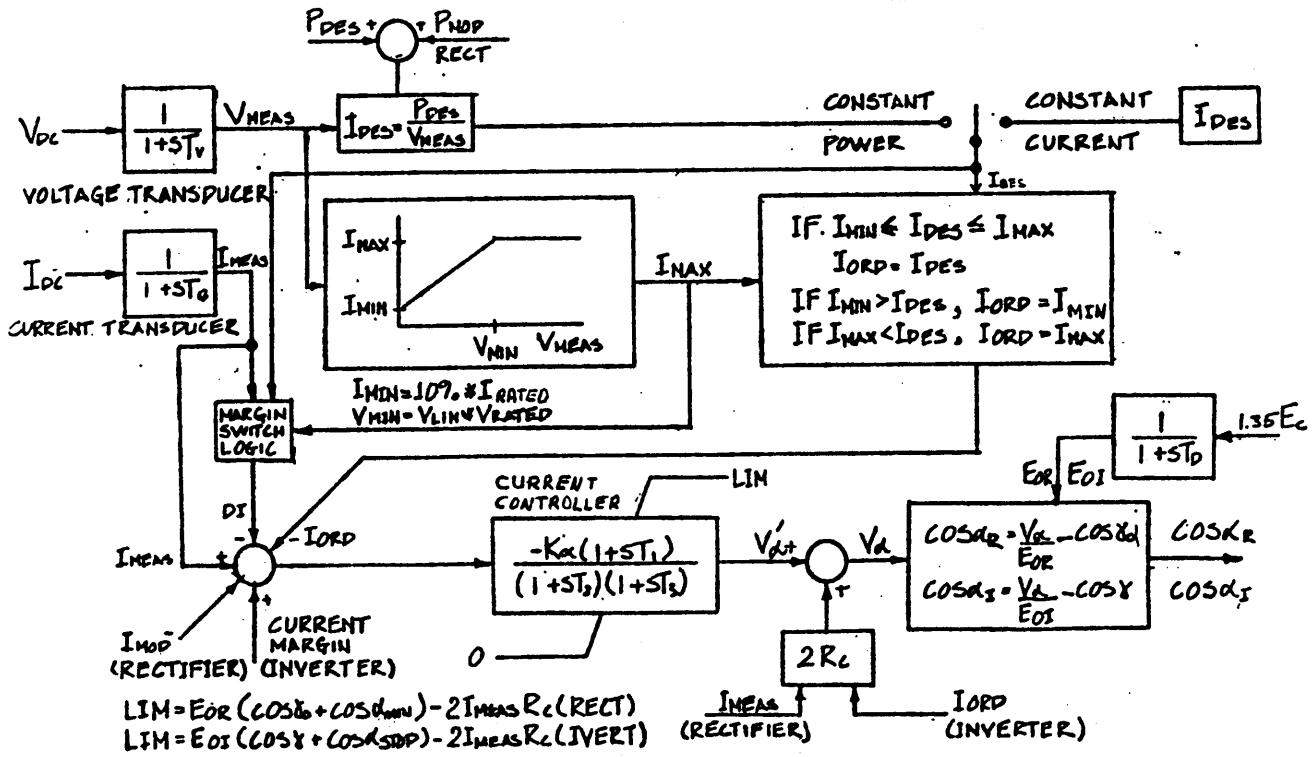

Fig. 2 : Block Diagram of BPA's Converter Controller

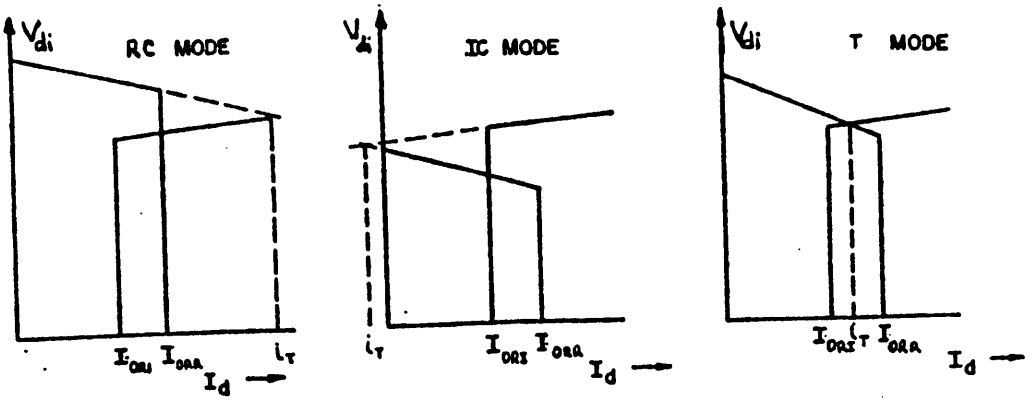

Figure 3 : Operating characteristic at the inverter dc terminal showing the value of trial current, i_T, for three different operating modes.

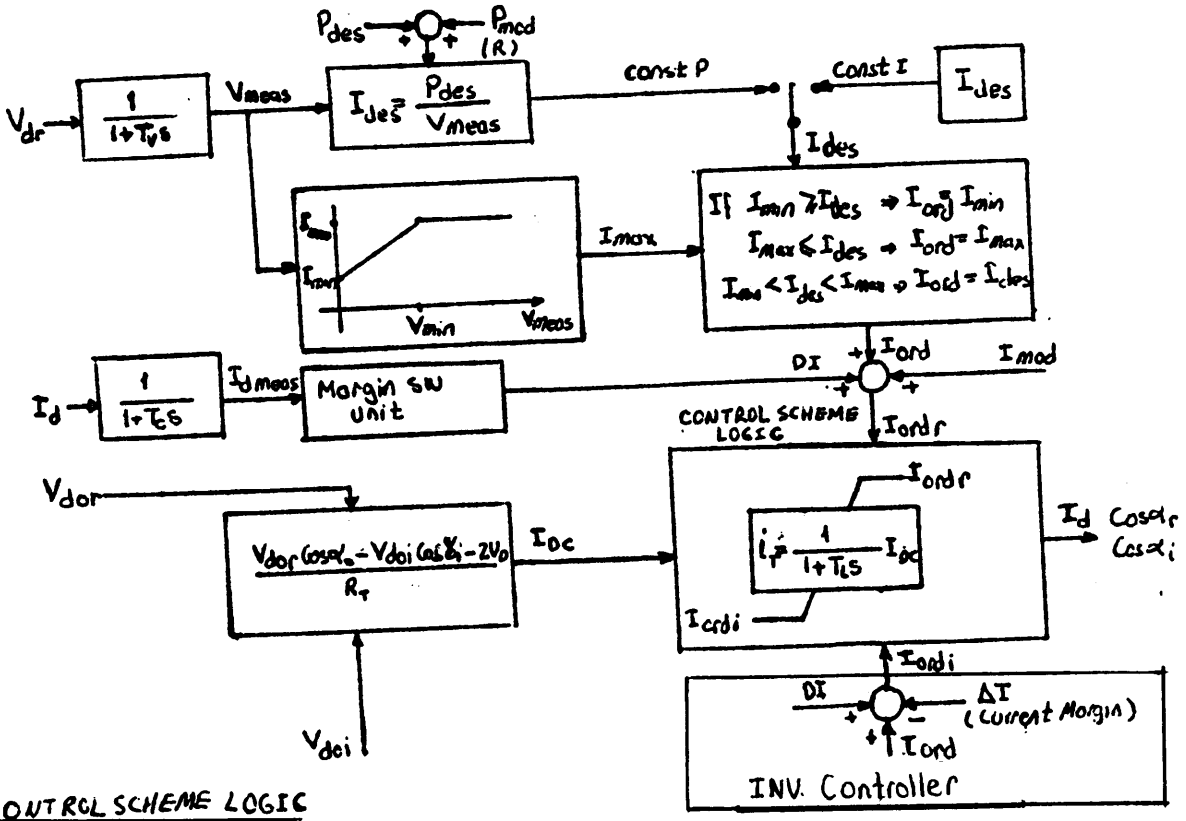

CONTROL SCHEME LOGIC

If $i_T \geq I_{ordr}$ → CC - CEA Control → $I_d = I_{ordr}$

$\gamma_i = \gamma_o$; $V_{dor}\cos\alpha_r = V_{doi}\cos\gamma_o + 2V_D + R_T I_d$

$i_T \leq I_{ordi}$ → CIA - CC Control → $I_d = I_{ordi}$

$\alpha_r = \alpha_o$; $V_{doi}\cos\gamma_i = V_{do}\cos\alpha_o - 2V_D - R_T I_d$

$I_{ordi} < i_T < I_{ordr}$ → CIA - CEA control → $I_d = i_T$

$\alpha_r = \alpha_o$; $\gamma_i = \gamma_o$

Figure 4 : Block Diagram of Simplified Model

The program identifies these control modes by using the relationship between i_T, Iordr, and Iordi (shown in Fig.3) as follows :

If	$i_T >$ Iordr	then	CC - CEA	Control
If	$i_T <$ Iordi	then	CIA - CC	Control
If	Iordi $< i_T <$ Iordr	then	CIA - CEA	Control

Block diagram of the simplified dc line model is given in Fig.4.

In addition to the 3 basic mode of operation , the program also checks and identifies a fourth mode of operation (CC - CIA Control) which is activated whenever the current control is on the rectifier and the upper limit is reached . Then control on inv. is changed from CEA to a quasi-stationary state where firing angle is assumed staying constant. This mode prevents the firing angle of inv. controller jumping from one exreme to another suddenly , which is possible under assumed model but impossible in practice. Also note that this kind of operation occurs during the period in which the line goes through a severe disturbance.

Also, modulation and Margin Switching Unit (MSU) signals are considered in the program as shown in Fig.4. Note that the program does not accept power reversal and faults on dc lines simulated by simplified model.

2. Input Data Card

The format of the data card required for dc lines to be represented by simplified model is given in Fig.5 together with the explanations of the data fields of the card. To get the debug output for dc values flag on column 40 must be set on.

NATIONAL 42-381 50 SHEETS 5 SQUARE
42-382 100 SHEETS 5 SQUARE
42-389 200 SHEETS 5 SQUARE

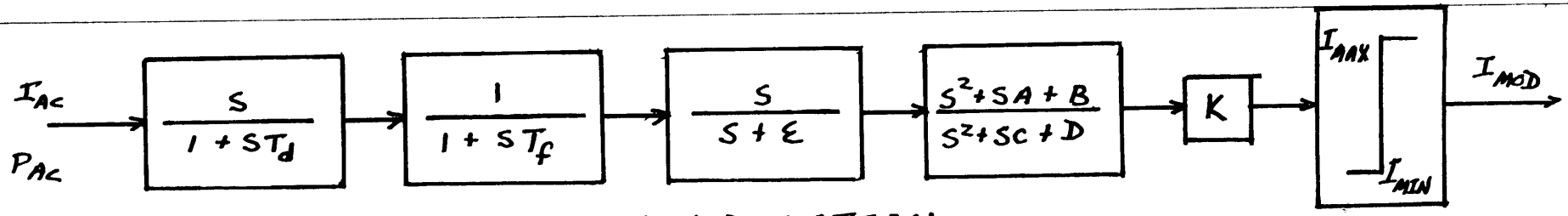

LOW LEVEL MODULATION

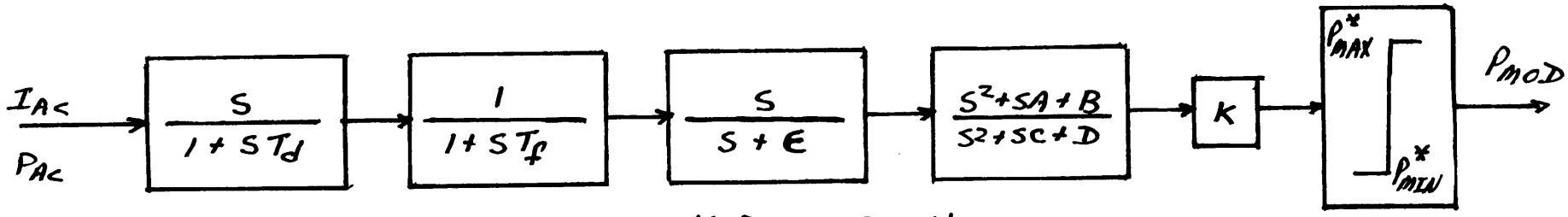

HIGH LEVEL MODULATION

$P^*_{MAX} = P_{MAX} - P_{DESIRED}$ $\quad$ $P^*_{MIN} = P_{MIN} - P_{DESIRED}$

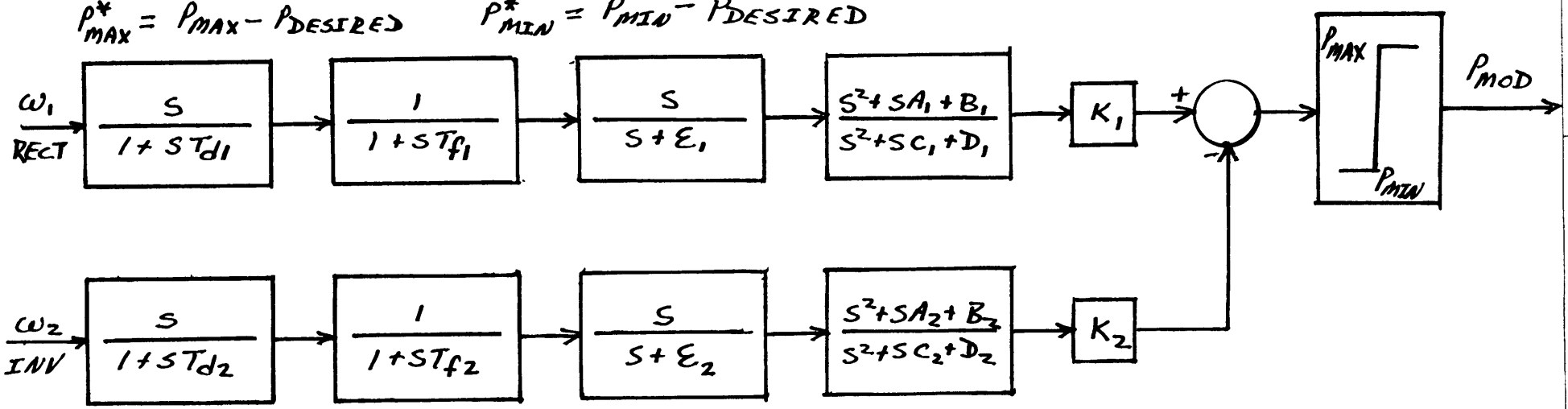

DUAL FREQUENCY MODULATION

TRR 9/18/86

BONNEVILLE POWER ADMINISTRATION
FORTRAN CODING FORM

Requested by _____ Ext No. _____ Job code _____ Project _____ Sheet ____ of ____

Statement No. | Identification

LOW LEVEL MODULATION MODEL

Col. 1	2	3	4–12	12–15	16–18	19–21	22–24	25–27	28–30	31–33	34–36	37–39	40–43	44–47	48–51	54	56–63	64–67	69–76	77–80
D	S		NAME	KV	Td	Tφ		E	A	B	C	D	K	Imin	Imax	HILO	NAME1	KV1	NAME2	KV2
																	BRANCH MONITORED			

COLUMN

1	A1	Card Type--D
2	A1	Card Subtype--S
4-12	A8	Name--Indicates the name of the bus on the DC side of the rectifier or inverter commutating transformer. Low level modulation is only available for rectifiers.
12-15	F4.0	bus kV
16-18	F3.3	Differentiator time constant in seconds
19-21	F3.3	Filter time constant in seconds
25-27	F3.3	E--lead compensator factor in seconds
28-30	F3.1	A--Notch filter parameter in radians/sec
31-33	F3.1	B--Notch filter parameter in (radians/sec)**2
34-36	F3.1	C--Notch filter parameter in radians/sec
37-39	F3.1	D--Notch filter parameter in (radians/sec)**2
40-43	F4.3	K--Modulation gain. Equal to the DC modulation current in amperes produced by a rate-of-change of power equal to one megawatt per second
44-47	F5.4	Imin--Minimum modulation current in per unit of the bridge current rating
48-51	F5.1	Imax--Maximum modulation current in per unit of the bridge current rating
54	A1	HILO--1 for power input and 2 for current input
56-63	A8	Name1--bus name of monitored line
64-67	F4.0	KV1--bus kV
69-76	A8	Name2--bus name of monitored line
77-80	F4.0	KV2--bus kV

NAME1 and NAME2 identify the monitored branch. The program will sum the power/current flow on all circuits from NAME1 to NAME2 and used this power/current as input to the modulator. The branch to be monitored must consist entirely of type L and/or type E line sections.

TRR 9/24/86

BONNEVILLE POWER ADMINISTRATION

FORTRAN CODING FORM

Requested by _____ Ext No. _____ Job code _____ Project _____ Sheet ____ of ____

Statement No. | CONT | Identification

HIGH LEVEL MODULATION MODEL

Col.	Field	Example
1–2	Card type	DS
4–12	NAME	
13–15	KV	
16–18	Td	
19–21	Tf	
25–27	E	
28–30	A	
31–33	B	
34–36	C	
37–39	D	
40–43	K	
44–47	PMIN	
48–51	PMAX	
54	HILO	
56–63	NAME1	BRANCH MONITORED
64–67	KV1	
69–76	NAME2	
77–80	KV2	

COLUMN		
1	A1	Card Type--D
2	A1	Card Subtype--S
4-12	A8	Name--Indicates the name of the bus on the DC side of the rectifier or inverter commutating transformer. High level modulation is only available for rectifiers.
12-15	F4.0	bus kV
16-18	F3.3	Differentiator time constant in seconds
19-21	F3.3	Filter time constant in seconds
25-27	F3.3	E--lead compensator factor in seconds
28-30	F3.1	A--Notch filter parameter in radians/sec
31-33	F3.1	B--Notch filter parameter in (radians/sec)**2
34-36	F3.1	C--Notch filter parameter in radians/sec
37-39	F3.1	D--Notch filter parameter in (radians/sec)**2
40-43	F4.3	K--Modulation gain. Equal to the DC modulation power in megawatts produced by a rate-of-change of power equal to one megawatt per second
44-47	F5.4	Pmin--Minimum modulation power in megawatts
48-51	F5.1	Pmax--Maximum modulation power in megawatts
54	A1	HILO--3 for power input and 4 for current input
56-63 64-67	A8 F4.0	Name1--bus name of monitored line kV1--bus kV
69-76	A8	Name2--bus name of monitored line
77-80	F4.0	KV2--bus kV

NAME1 and NAME2 identify the monitored branch. The program will sum the power/current flow on all circuits from NAME1 to NAME2 and use this power/current as input to the modulator. The branch to be monitored must consist entirely of type L and/or type E line sections.

81-6

TRR 9/24/86

Requested by _____ Ext No. _____ Job code _____

BONNEVILLE POWER ADMINISTRATION
FORTRAN CODING FORM

Project _____ Sheet ____ of ____

Statement No. | CONT | DUAL FREQUENCY MODULATION MODEL | Identification

```
DS   NAME     KV  Td  Tf      E   A   B   C   D   K   PMIN  PMAX      NAME1   KV1     NAME2   KV2
                                                                      BUS MONITORED
```

COLUMN

1	A1	Card Type--D
2	A1	Card Subtype--S
4-12	A8	Name--Indicates the name of the bus on the DC side of the rectifier or inverter commutating transformer. Dual frequency modulation requires one card for the rectifier and one card for the inverter
12-15	F4.0	bus kV
16-18	F3.3	Differentiator time constant in seconds
19-21	F3.3	Filter time constant in seconds
25-27	F3.3	E--lead compensator factor in seconds
28-30	F3.1	A--Notch filter parameter in radians/sec
31-33	F3.1	B--Notch filter parameter in (radians/sec)**2
34-36	F3.1	C--Notch filter parameter in radians/sec
37-39	F3.1	D--Notch filter parameter in (radians/sec)**2
40-43	F4.3	K--Modulation gain. Equal to the C modulation power in megawatts produced by a rate-of-change of frequency equal to one hertz per second.
44-47	F5.4	Pmin--Minimum modulation power in megawatts
48-51	F5.1	Pmax--Maximum modulation power in megawatts
56-63	A8	Name1--bus name of monitored bus
64-67	F4.0	KV1--bus kV
69-76	A8	Name2--bus name of monitored bus
77-80	F4.0	KV2--bus kV

NAME1 and NAME2 must be identical and give the bus name where the bus frequency input is being monitored.

8-19

TRR 9/24/86

62

Requested by _____ Ext No. _____ Job code _____

BONNEVILLE POWER ADMINISTRATION
FORTRAN CODING FORM

Project _____ Sheet ____ of ____

Statement No. | CONT | GAMMA MODULATION | Identification

DS	NAME	KV	T_1	T_3	T_4	T_5	T_6	K_γ	γMAX	A	B	5	γMIN
												HILO	

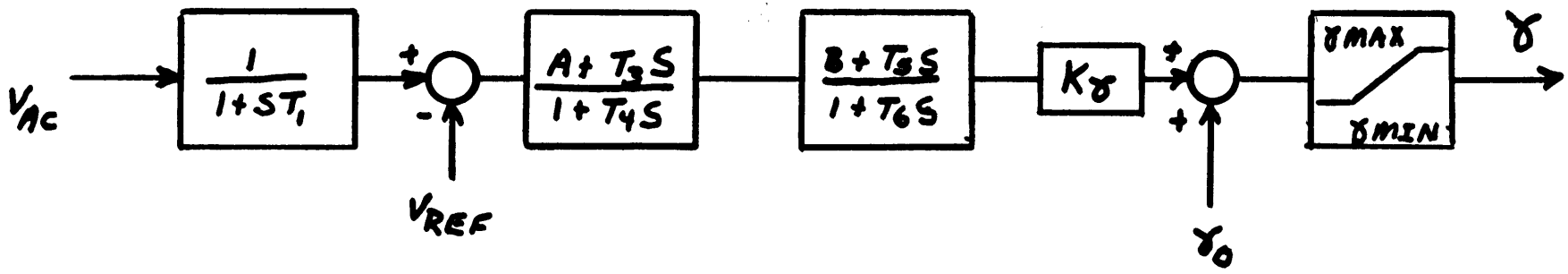

T_1, T_3, T_4, T_5 ARE IN SECS. K_γ IS IN DEGREES/PU VOLTS

$\gamma_{MAX}, \gamma_{MIN}$ ARE IN DEGREES A, B MUST BE 1 OR ZERO

HILO MUST BE 5

BPA 192 Rev. 4 12-65

OUTPUT

The transient stability program is capable of listing and plotting the following data:

CLASSIFICATION	BUS DATA
1	Bus voltage--magnitude and angle (only magnitude is plotted)
2	Bus frequency deviation
3	Bus load--real*
4	Bus load--reactive*

CLASSIFICATION	GENERATOR DATA
1	Generator angle (relative or absolute)
2	Velocity deviation
3	Field voltage
4	Flux linkage
5	Main field saturation
6	Mechanical power
7	Electrical power
8	Exciter saturation
9	Regulator output
10	Accelerating power
11	Machine MVAR
12	Excitation supplementary signal
13	Damping torque
14	Field current
15	Area accelerating power

The area accelerating power option gives the sum of the accelerating powers for all machines in a specified group. A 'G' card must be entered for each machine in the group and all machines in one group must have the same grouping code. There can be up to 5 different groups. A '1' must be punched in column 62 to specify that this option is requested.

* BUS LOADS ARE ONLY AVAILABLE IF IBLOD ≠ 1 ON THE 'F1' CARD

TRR 4/15/87

CLASSIFICATION	LINE DATA
1	Line flow real
2	Line flow reactive
3	Apparent line impedance
4	Line current
5	Z - Z dot
6	R - R dot

CLASSIFICATION	DC DATA
1	Firing angle
2	DC current
3	DC voltage
4	Modulation signal
5	Extinction angel
6	Internal state variable V alpha
7	Internal state variable V alpha prime
8	Angle of overlap
9	DC power

Output can be written to any one of three files:

(1) the output file to obtain a line printer listing

(2) the plot file for input to a Versatec plotter

(3) the auxiliary file to obtain a listing or for input to another program

To indicate which files the data should be written to, the following code is used:

0 - no output
1 - write to output file only
2 - write to plot file only
3 - write to output file and plot file
4 - write to auxiliary file only
5 - write to output file and auxiliary file
6 - write to auxiliary file and plot file
7 - write to auxiliary file, output file and plot file

9-2

TRR 9/26/86

OUTPUT ANALYSIS FEATURES

The transient stability program contains several features designed to help the user analyze the results of a study.

Bad voltage analysis--the user may specify on the MH card a maximum voltage, EXMAX, and a minimum voltage, EXMIN. For each time step in the study the program will list every bus voltage greater than EXMAX and less than EXMIN. Default values are EXMAX = 1.3 pu and EXMIN = 0.8 pu. This feature may be disabled by entering a '1' in column 5 of the 99 card.

Bad apparent impedance analysis--the user may specify on the MH card an angular difference, AREF. For each time step in the study the program will list every line that has an angular difference across it that exceeds AREF along with the line's apparent impedance. Default value of AREF is 60. degrees. The user is cautioned that the logic that checks the angular difference uses the lines in the original network obtained from the power flow. If any lines have been modified or deleted, during the transient stability study the apparent impedances for the lines will be wrong. This feature may be disabled by entering a '1' in column 5 of the 99 card.

Low voltage analysis--the program will sort all bus voltages at each time step in the study and keep a table of the 20 buses with the lowest voltages along with the time when the low voltage occurred. Bus voltages ocurring while a short circuit is applied are automatically discarded. This low voltage table is always printed, the user need not enter any parameter to request it and there is no way it can be disabled.

Low bus frequency analysis--the program calculates and sorts all bus frequencies at each time step in the study and keeps a table of the 20 buses with the lowest frequencies along with the time when the frequency occurred. If T1 and T2 are entered on the MH card, only frequencies occurring during this time window will be analyzed. If T1 and T2 are not entered, frequencies occurring while a short circuit is applied will automatically be discarded.

Maximum and minimum analysis--for each output quantity that is written to the output file the program will calculate and print a maximum and minimum value. The user may specify a time window by entering values for T1 and T2 on the MH card. The program will then calculate the maximum and minimum only for the time period T1 to T2. If T1 and T2 are blank, the maximum and minimum are calculated for the entire study time.

TRR 4/15/87

Requested by _____ Ext No. _____ Job code _____

BONNEVILLE POWER ADMINISTRATION
FORTRAN CODING FORM

Project _____ Sheet ____ of ____

MAIN HEADER CARD - MH

Statement No.	Cont.	1–5	6–12	13–23	24–34	35–46	47–52	53–58	59–62	63–67	Identification
MH		NUMPLT	MAXT	EXMAX	EXMIN	AREF	EDT	MAXCYC	NSKP	T_1	T_2
		I2	F5.1	F10.5	F10.5	F10.0	F5.2	I5	I3	F4.0	F4.0
1		4	7	13	24	35	46	52	58	62	67

This card contains miscellaneous constants used in output or plotting. The MH card must come directly after the 90 card.

NUMPLT	Number of plots per axis. Default value is 4. Maximum value is 15.
MAXT	Data will be listed and plotted from starting time to this time in cycles. Default value is the end time of the solution.
EXMAX, EXMIN	All bus voltages falling outside these pu limits are listed at each time step. Default for EXMAX is 1.3 pu. Default for EXMIN is 0.8 pu.
AREF	At each time step the angular difference of each branch bus pair is compared against AREF. The ratio of E/I from both ends of the line is listed under "Bad Apparent Impedances", if the angular difference exceeds AREF. Default value is 60. degrees.
EDT	Time scale on the plots. Default value is 60 cycles/inch.
MAXCYC	Total time steps in the solution. This must be entered only if a case has more than 650 time steps.
NSKP	Program plots and lists every NSKP time steps. If NSKP is blank or zero, every time step is plotted and listed.
T1 and T2	Times in cycles. T1 and T2 define a time period during which the program will calculate and list the 20 buses with the lowest bus frequencies. Maximum and minimum values for each quantity written to the output file will also be calculated for only the time period between T1 and T2. T2 must be greater than T1. If T2 is zero, this feature is inactive. See the Output Analysis Features section for more information.

TRR 4/15/87

Requested by _____ Ext No. _____ Job code _____

BONNEVILLE POWER ADMINISTRATION
FORTRAN CODING FORM

Project _____ Sheet ___ of ___

Statement No. | CONT

BUS HEADER CARD

Identification

	CLASSIFICATION	MAX	MIN	CLASSIFICATION	MAX	MIN	CLASSIFICATION	MAX	MIN	CLASSIFICATION	MAX	MIN
BH		F6.0	F6.0		F6.0	F6.0		F6.0	F6.0		F6.0	F6.0
	9	13	20	27	31	38	45	49	56	63	67	74

This signals the start of the bus output cards. It must come before all individual bus cards. If it is desired to plot a bus variable only within certain limits, the classification of that variable along with limits should be entered in the appropriate fields. If no limits are punched, actual values will be plotted. The bus output classifications are given on page 01.

TRR 4/15/87

Requested by _____ Ext No. _____ Job code _____

BONNEVILLE POWER ADMINISTRATION
FORTRAN CODING FORM

Project _____ Sheet ____ of ____

Statement No. | CONT | Identification

INDIVIDUAL BUS CARD

	BUS NAME	BASE KV	BUS VOLTAGE	BUS FREQUENCY	BUS LOAD REAL *	BUS LOAD REACTIVE *	GROUPING CODE
B							
1	4	12	18	21	24	27	32

Bus name, base kV, and output options for each classification must be punched. All B cards must be grouped together behind the BH card.

The grouping code may be any integer from 0 to 999. All buses having the same code will have data plotted on one axis. If the number of buses in a group exceeds the number of plots per axis, the excess bus plots will be on a second set of axes.

* BUS LOADS ARE ONLY AVAILABLE IF IBLOD ≠ 0 ON THE 'F1' CARD

TRR 4/15/87

BPA 192 Rev. 3 (8-63)

Requested by _____ Ext No. _____ Job code _____

BONNEVILLE POWER ADMINISTRATION
FORTRAN CODING FORM

Project _____ Sheet ____ of ____

Statement No.	CONT	STATEMENT	Identification

GENERATOR HEADER CARD

6H	REFERENCE BUS	REFERENCE BASE	REFERENCE ID	CLASSIFICATION	MAX	MIN	CLASSIFICATION	MAX	MIN	CLASSIFICATION	MAX	MIN
	A8	F4.0	R1	I2	F6.0	F6.0	I2	F6.0	F6.0	I2	F6.0	F6.0
1	7	15	20	22	27	39	41	46	53	60	65	72

This card signals the start of the generator output cards. It must come before all individual generator cards. If it is desired to plot a generator variable only within certain limits, the classification of that variable along with the limits should be entered in the appropriate fields. If no limits are punched, actual values will be plotted. The generator output classifications are given on page 01.

To output generator angles relative to some other generator angle, the reference generator name, base KV, and ID must be entered.

BPA 192 (Rev. 3-1-64)

Requested by _____ Ext No. _____ Job code _____

BONNEVILLE POWER ADMINISTRATION
FORTRAN CODING FORM

Project _____ Sheet _____ of _____

Statement No.	CONT	STATEMENT	Identification

CONTINUATION GENERATOR HEADER

| | | |

Requested by _____ Ext No. _____ Job code _____ BONNEVILLE PC ADMINISTRATION FORTRAN CODING FORM Project _____ Sheet ____ of ____

Statement No.	CONT	STATEMENT	Identification
1 2 3 4 5	6	7 8 9 10 11 12 13 14 15 16 17 18 19 20 21 22 23 24 25 26 27 28 29 30 31 32 33 34 35 36 37 38 39 40 41 42 43 44 45 46 47 48 49 50 51 52 53 54 55 56 57 58 59 60 61 62 63 64 65 66 67 68 69 70 71 72	73 74 75 76 77 78 79 80

INDIVIDUAL GENERATOR CARD

	GENERATOR BUS NAME		GENERATOR BASE	GENERATOR ID	GENERATOR ANGLE	VELOCITY DEVIATION	FIELD VOLTS	FLUX LINKAGE EPQ	MAIN FIELD SAT	MECH. POWER	ELECTRICAL POWER	EXCITER SAT	REGULATOR OUTPUT	ACCELERATING POWER	GENERATOR MVAR	EXCITER SUP. SIG.	DAMPING TORQUE	FIELD CURRENT	AREA ACC. POWER	GROUPING CODE
G																				
		A8	F4.0	R1																I3
1	4		12	17	20	23	26	29	32	35	38	41	44	47	50	53	56	59	62	76

OUTPUT OPTIONS

BLANK OR 0 - IGNORE
1 - OUTPUT ONLY
2 - PLOT ONLY
3 - PLOT AND OUTPUT

Generator bus name, base KV, ID, and output options for each classification must be punched. All G cards must be grouped together behind the GH card.

The grouping code may be any integer from 0 to 999. All generators having the same code will have data plotted on one axis. If the number of generators in a group exceeds the number of plots per axis, the excess generator plots will be on a second set of axes.

If area accelerating power is requested, a nonzero grouping code must be punched.

REVISED 4/30/75

Chapter 13
Line Output Quantities

13.1 Line Header Record

This record signals the start of the line output records. It must come before all individual line output records. If it is desired to plot a variable only within certain limits, the classification of that variable along with the limits should be entered in the appropriate fields. If no limits are entered, actual values will be plotted. The limits for classification 3, apparent impedance, are entered on the individual line records, not the line header records.

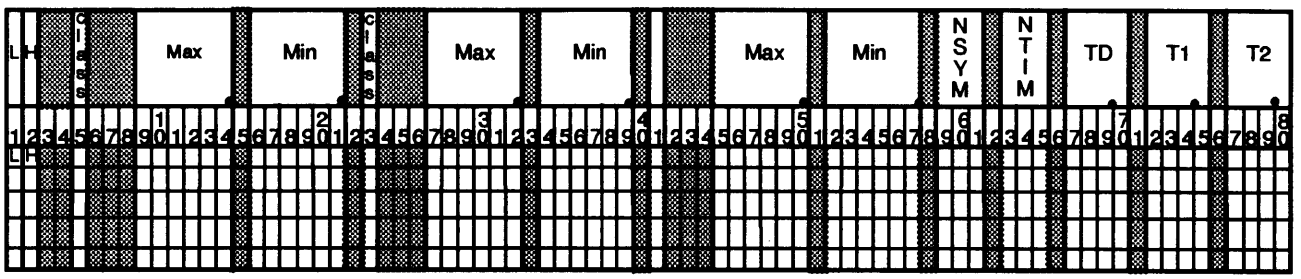

Figure 13-1 Line Header Record Layout

Table 13-1. Column description Line Header Record

Field	Columns	Format	Description
class	(5:5) (23:23) (41:41)	I1	Classification code: 1 = MWs, 2 = MVARs, 3 = amps.
NSYM	(59:61)	I3	Symbols are drawn on the apparent impedance plot every NSYM time steps. Default is 4.
NTIM	(63:65)	I3	The time in cycles is printed at every NTIM time steps on the apparent impedance plot.
TD, T1, and T2	(67:70) (72:75) (77:80)	F4.3	TD, T1, and T2 are time constants, in seconds, used when calculating R-Rdot for a line. See Figure 13-1 for the block diagram of the model. Default values are TD = 0.012 seconds, T1 = 0.053 seconds, and T2 = 0.053 seconds.

13-1

13.2 Individual Line record

Individual type L line records must be grouped with the LH line header record. Each L record must have a complete line description (Bus1, kV1, Bus 2, kV2, par, and section).

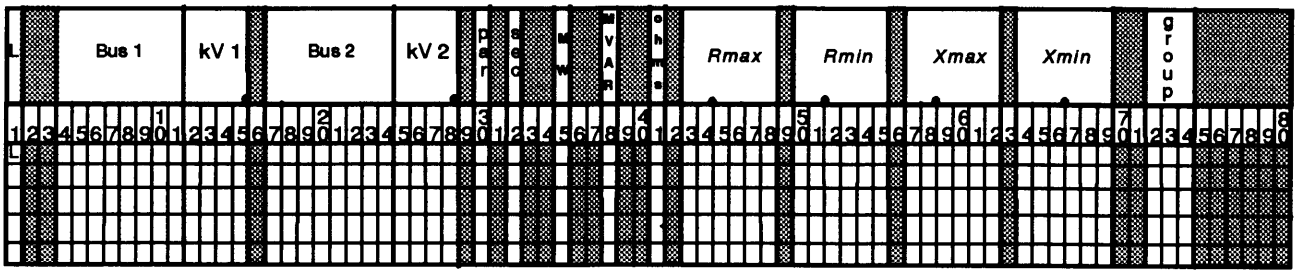

Figure 13-2 . Individual Line Record Layout

Table 13-2. Column description for Individual Line output record

Field	Columns	Format	Description
MW	(35:35)	I1	Output code for line flow in MWs: 0 - ignore 1 - print only 2 - plot only 3 - print and plot only 4 - add to *.SWX file 5 - print and add to *.SWX file 6 - plot and add to *.SWC file 7 - print, plot, and add to *.SWX file
MVAR	(38:38)	I1	Output code for line flow in MVARs
ohms	(41:41)	I1	Output code for line apparent impedance in ohms
Rmax Rmax Xmin Xmax	(43:48) (50:55) (57:62) (64:69)	F6.4	These are the per unit real and imaginary limits for the apparent impedance plot. As only one apparent impedance plot is drawn on an axis, the grouping code does not apply to this classification. Each apparent impedance plot must have limits defined. The limits to not carry from L record to the next.
group	(72:74)	I3	The grouping code may be any integer from 0 to 999. All lines having the same code will have data plotted on one axis. If the number of lines in a group exceed the number of plots per axis, the excess line plots will be on a second set of plots.

13-2

13.3 Individual Line record (continuation)

Individual type LC line records must be grouped with the LH line header record. Each L record must have a complete line description (Bus1, kV1, Bus 2, kV2, par, and section). L and LC records must be grouped together.

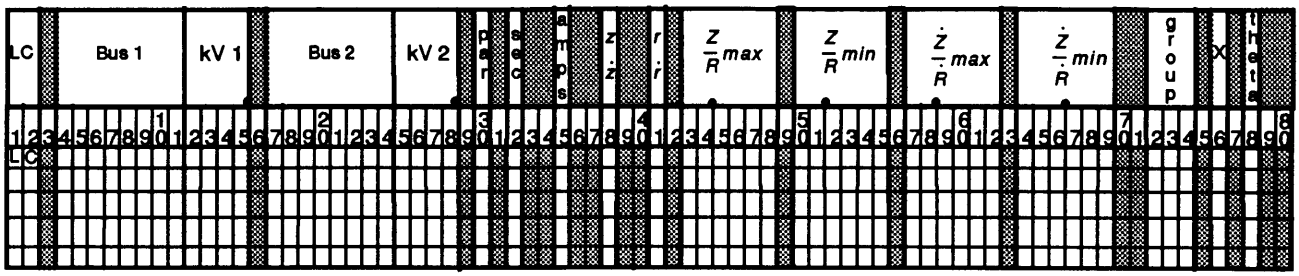

Figure 13-3 Individual Line (continuation) Record Layout

Table 13-3. Column description for LC Individual Line (continuation) record

Field	Column	Format	Description
ohms	(35:35)	I1	Output code for line flow in amps: 0 - ignore 1 - print only 2 - plot only 3 - print and plot only 4 - add to *.SWX file 5 - print and add to *.SWX file 6 - plot and add to *.SWC file 7 - print, plot, and add to *.SWX file
$x - \dot{x}$	(38:38)	I1	Output code for the X-Xdot plots.:
$r - \dot{r}$	(41:41)	I1	Output code for the R-R dot plots.:
X	(76:76)	I1	Output code for the TCSC reactance, in ohms. See Fig. 6-7.
theta	(78:78)	I1	Output code for the TCSC synthetic angle, in degrees. See Fig 6-4.

The grouping code applies only to the line flow (amps) as the Z-Zdot and R-Rdot plots are drawn one per axis. If bot R-Rdot and Z-Zdot options are selected, the maximum and minimum apply to Z-Zdot.

source: /shr4/eohbwalt/frame/TSP_Chap13.doc

13-2.1

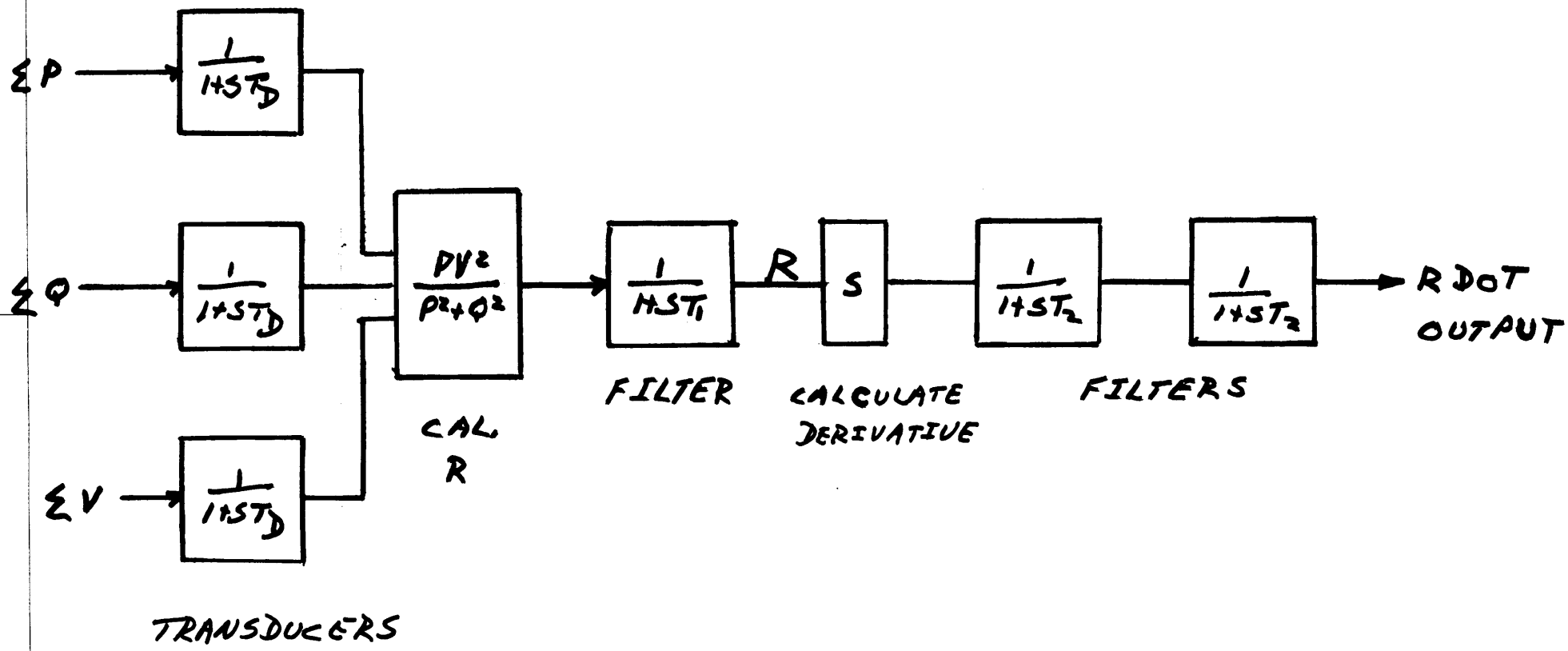

CALCULATION OF R AND R DOT OUTPUT

REVISED 3/20/84

13-2.2

Requested by _____ Ext No. _____ Job code _____

BONNEVILLE POWER ADMINISTRATION
FORTRAN CODING FORM

Project _____ Sheet ____ of ____

Statement No.	CONT.	STATEMENT	Identification

LINE IMPEDANCE MODIFICATION CARD

	BUS 1	BASE 1	BUS 2	BASE 2	PARALLEL	G1	B1	R12	X12	CYCLES
F3										
	A8	F4.0	A8	F4.0	R1	F7.4	F7.4	F7.4	F7.4	F7.4
1	5	13	19	27	32	38	45	52	59	66

If, during the execution of the solution portion of the program, a line's impedance is modified using an LZ card it is necessary to use the line impedance modification card to correctly output data for the line.

BUS1, BASE1, BUS2, BASE2, PARALLEL give the identification of the line.

G1, B1 Shunt admittance of the line's Pi equivalent. It is assumed both shunt legs are equal.

R12, X12 Through impedance of the line's Pi equivalent.

CYCLES Time in cycles when the impedance is modified.

Requested by _____ Ext No. _____ Job code _____

BONNEVILLE POWER ADMINISTRATION
FORTRAN CODING FORM

Project _____ Sheet ____ of ____

Statement No. | CONT | STATEMENT | Identification

DC HEADER CARD

1–5	6	7–12	13–18	19–24	25–30	31–36	37–42	43–48	49–54	55–60	61–66	67–72	73–80
DH		CLASSIFICATION	MAX	MIN	CLASSIFICATION	MAX	MIN	CLASSIFICATION	MAX	MIN	CLASSIFICATION	MAX	MIN
		I1	F6.0	F6.0	I1	F6.0	F6.0	I1	F6.0	F6.0	I1	F6.0	F6.0
1		5	9	16	23	27	34	41	45	52	59	63	70

This card signals the start of the DC output cards. It must come before all individual DC cards. If it is desired to plot a variable only within certain limits, the classification of that variable along with the limits should be entered. DC output classifications are given on page 02.

BONNEVILLE POWER ADMINISTRATION

FORTRAN CODING FORM

Requested by _____ Ext No. _____ Job code _____ Project _____ Sheet _____ of _____

Statement No. | CONT | INDIVDUAL DC OUTPUT CARD – ALL DC MODELS | Identification

1	4	12	17	25	32	34	36	38	40	42	44	46	48	50	52	54	56	58	60	62	64	66	68
D		NAME1	KV1		NAME2	KV2	α_i	α_e	I_1	I_2	V_1	V_4	MOD1	MOD2	γ_1	γ_m	$V_{\alpha 1}$	$V_{\alpha 2}$	$V_{\alpha 1}'$	$V_{\alpha 2}'$	μ_1	μ_2	P_1	P_2	IGRP

NAME1, KV1 BUS NAME AND BASE KV OF DC COMMUTATING BUS

NAME2, KV2 BUS NAME AND BASE KV OF DC COMMUTATING BUS (OPTIONAL)

α – IGNITION ANGLE

I – DC CURRENT

V – DC TERMINAL VOLTAGE

MOD – MODULATION INPUT SIGNAL

γ – EXTINCTION ANGLE

V_α – INTERNAL STATE VARIABLE

V_α' – INTERNAL STATE VARIABLE

μ – ANGLE OF OVERLAP

P – DC POWER

IGRP – GROUPING CODE

TRR 9/7/86

III-2

BONNEVILLE POWER ADMINISTRATION

FORTRAN CODING FORM

Requested by _____ Ext No. _____ Job code _____ Project _____ Sheet ____ of ____

Statement No. | CONT | STATEMENT | Identification

VAX

90 CARD

90

This card signals the start of the output portion of the data deck. It must come before all other output cards

99 CARD

99 NOP NOPZ

5 8

This card signals the end of the output deck. It must be the last card in the deck. If NOP is non-blank a listing of the buses and generators used in the case will be printed on the output file. If NOPZ is non-blank, the bad apparent impedances and bad voltages will not be printed.

15-1

BPA 192

Requested by _____ Ext No. _____ Job code _____

BONNEVILLE POWER ADMINISTRATION
FORTRAN CODING FORM

Project _____ Sheet ___ of ___

Statement No. | CONT | Identification

SPECIAL PLOTS

	1–3	4–11	12–16	17–28	29–36	37–41	42–54	55–58	59–62	63–80
MV		NAME11	KV11	NAME12	KV12	NAME21	KV21	NAME22	KV22	
		LINE ONE Y AXIS (4)		PAR1		LINE 2 X AXIS (29)		PAR2	OPT1 (55)	CAE1 OPT2 (59) CAE2
MV		NAME1	KV1			NAME2	KV2			
		BUS 1 Y AXIS (4)				BUS 2 X AXIS (29)			OPT1 (55)	CAE1 OPT2 (59) CAE2
MV		NAME1	KV1	HA1 (17)		NAME2	KV2	HA2 (42)		
		GEN 1 Y AXIS				GEN 2 X AXIS			OPT1 (55)	CAE1 OPT2 (59) CAE2

SPECIAL PLOTS 'MV' CARD

The special plots card allows the user to plot one output variable on the Y-axis versus another output variable on the X-axis. The special plots logic has been written to be completely general so that any option may be plotted against any other option. Time can also be plotted on either the X or Y-axis.

In columns 4-52 of the MV card the user enters the identification for the Y-axis data. This identification may be a line, an AC bus, a DC bus, or a generator. If time is to be plotted, no identification is necessary. In columns 29-53, the user enters the identification for the X-axis data.

In column 55, the user enters the output option for the Y-axis. This option must be one of the following:

'B' AC bus quantities
'D' DC bus quantities
'G' Generator quantities
'L' Line quantities
'Y' Generator difference quantities
'T' Time in cycles

The option for the X-axis is entered in column 59.

In columns 56-57, the user enters the output code for the Y-axis plot. The codes for each of the output options are given on the following pages. Columns 60-61 contain the output code for the X-axis.

SPECIAL PLOTS

AC BUS VARIABLES CODE = 'B'

OPTION	
1	Bus voltage magnitude - PU
2	Bus frequency deviation - Hertz

DC BUS VARIABLES CODE = 'D'

OPTION	
1	Ignition angle - Degrees
2	Line current - Kiloamperes
3	DC terminal voltage - Kilovolts
4	DC modulation signal - PU
5	Extinction angle - Degrees
6	V alpha - PU
7	V alpha prime - PU
8	Angle of overlap - Degrees
9	DC terminal power - MW's

AC LINE VARIABLES CODE = 'L'

OPTION	
1	Line flow - MW's
2	Line flow - MVAR's
3	Apparent resistance - PU
4	Apparent reactance - PU
5	Current flow - Amperes
6	Apparent impedance - Ohms
7	Rate of change of apparent impedance - Ohms/second
8	Rate of change of apparent resistance - Ohms/second

GENERATOR VARIABLES CODE = 'G'

OPTION	
1	Generator angle - Degrees
2	Frequency deviation - Hertz
3	Field voltage - PU
4	Flux linkage - PU
5	Main field saturation - PU
6	Mechanical power - MW's
7	Electrical power- MW's
8	Exciter saturation - PU
9	Regulator output - PU
10	Acclerating power - MW's
11	Reactive output - MVAR's
12	Exciter PSS output
13	Damping torque - MW's
14	Field current - PU

GENERATOR DIFFERENCE VARIABLES CODE = 'Y'

OPTION	
1	Generator angles - Degrees
2	Frequency deviations - Hertz
7	Electrical power - MW's

ELAPSED TIME CODE = 'T'

No option required, time is plotted in cycles. One cycle = 1/60 seconds

Requested by _____ Ext No. _____ Job code _____

BONNEVILLE POWER ADMINISTRATION
FORTRAN CODING FORM

Project _____ Sheet ___ of ___

Statement No. | CONT | EXAMPLE FOR SPECIAL PLOTS | Identification

```
MV MALIN    500.ROUND MT500.2                                   L03 T

THIS CARD WILL PRODUCE A PLOT WITH THE APPARENT RESISTANCE OF LINE
MALIN-ROUND MT #2 ON THE Y-AXIS VERSUS TIME ON THE X AXIS.

MV MALIN    500.ROUND MT500.2                                   L07 T

THIS CARD WILL PRODUCE A PLOT WITH THE RATE OF CHANGE OF APPARENT IMPEDANE (Z DOT)
VERSUS TIME.

MV DALLES 313.8 1             MALIN    500.ROUND MT500.2 G03 L02

THIS CARD WILL PRODUCE A PLOT WITH GENERATOR FIELD VOLTAGE AT DALLES 3
ON THE Y-AXIS VERSUS MVAR LINE FLOW ON THE MALIN-ROUND MT #2 LINE
ON THE X AXIS.

MV JOHN DAY500.               CELILO1  106.                     B01 D01

THIS CARD WILL PRODUCE A PLOT WITH BUS VOLTAGE MAGNITUDE AT JOHN DAY
VERSUS FIRING ANGLE AT CELILO1

MV CELILO1 106.               CELILO1  106.                     D09 D03

THIS CARD WILL PRODUCE A PLOT WITH DC TERMINAL POWER AT CELILO1 VERSUS
DC TERMINAL VOLTAGE AT CELILO1
```

GENERATOR DIFFERENCE PLOTS

The GD card allows the user to output the difference in angle, frequency deviation, or electrical power between two generators. Only plots are available as output and an MV card must be used in conjunction with the GD card to obtain the output. The example on the following page shows how to used the GD and MV cards.

Identification for generator one is entered in columns 4-17 of the GD card. Identification for generator two is entered in columns 64-77. To request angle difference, column 20 should be nonzero. Frequency deviation difference is obtained if column 23 is nonzero, and power difference is obtained if column 38 is nonzero. The differences obtained are the quantity at generator one minus the quantity at generator two.

Requested by _____ Ext No. _____ Job code _____

BONNEVILLE POWER ADMINISTRATION

FORTRAN CODING FORM

Project _____ Sheet ____ of ____

Statement No.	CONT	GENERATOR DIFFERENCE PLOTS	Identification
GD		NAME1 KV1 HA- ANGLE FREQ. DEVIATION ELECTRICAL POWER NAME2 KV2	HA2

Requested by _____ Ext No. _____ Job code _____

BONNEVILLE POWER ADMINISTRATION
FORTRAN CODING FORM

Project _____ Sheet ___ of ___

Statement No. | CONT | EXAMPLE FOR GENERATOR DIFFERENCE PLOTS | Identification

```
GH     PTS7SWNG20.0 1
MV COULEE 5  15 2              COULEE 5  15 2              Y01 601
MV COULEE 5  15 2              COULEE 5  15 2              Y02 601
MV COULEE 5  15 2              COULEE 5  15 2              Y07 601
GD COULEE 5  15 2  3  3                3                          DALLES 313.8 1
```

THE ABOVE CARDS WILL PRODUCE THE FOLLOWING PLOTS:

THE DIFFERENCE BETWEEN GENERATOR ANGLES AT COULEE 5 AND DALLES 3 (COULEE5- DALLES 3) ON THE Y-AXIS VERSUS RELATIVE GENERATOR ANGLE AT COULEE 5 ON THE X-AXIS,

THE DIFFERENCE BEWTEEN GENERATOR FREQUENCIES AT COULEE 5 AND DALLES 3 ON THE Y-AXIS VERSUS RELATIVE GENERATOR ANGLE AT COULEE 5 ON THE X-AXIS,

THE DIFFERENCE BETWEEN GENERATOR ELECTRICAL POWERS AT COULEE 5 AND DALLES 3 ON THE Y-AXIS VERSUS RELATIVE GENERATOR ANGLE AT COULEE 5 ON THE X-AXIS.

APPENDIX A

FUNCTIONAL SPECIFICATIONS FOR WESTERN SYSTEMS COORDINATING COUNCIL LOAD FLOW & STABILITY COMPUTER PROGRAMS

PART I, GENERAL, LOAD FLOW & STABILITY

A. WSCC will consider any deviations and alternates of these specifications, provided the details of such deviations and alternates are fully explained by the supplier.

B. Load Flow and Stability programs shall be compatible. Load flow shall accept card input or tape input from previous case. Stability program shall accept load flow output and system data directly from load flow history tape of any case. Load flow and stability shall also run "back-to-back" if desired, that is, stability program run as a continuation of load flow without operator intervention to initiate stability run.

C. Program shall be written in a standard FORTRAN[1] language for ease of modification except for relocatable FORTRAN subroutines.

D. Programs shall be completely documented including full explanation of theory and equations upon which calculations are based as well as the FORTRAN listings. Complete users manual and program documentation shall be supplied with delivery of programs. A glossary of terms shall be included in the documentation.

E. Programs shall be written for computer acceptable to the Council.

F. Reduced computer storage capacity shall result in reduced program limits rather than elimination of program features.

G. Program features shall not be at expense of excessive input manipulation or machine time.

H. Diagnostics shall be provided in program operation to reveal cause of program stoppage or failure to converge. Included in diagnostic shall be maximum real and quadrature components of power and voltage change and names of busses on which they occur. Bus mismatch shall be available as diagnostic at users option. Diagnostics shall be available at each iteration at users option.

PART II, LOAD FLOW PROGRAM

A. System Limits

1. 2000 buses.
2. 3000 branches, 1000[2] of which may be transformers with fixed or

LTC taps.

3. 50 phase shifters.
4. 60 interchange control areas.
5. Voltage at 400 buses[3] controlled remotely by generation or transformer LTC.
6. 90 loss accumulation areas other than interchange areas.
7. 10 two-terminal and 5 three-terminal[4] DC lines.

B. Buses

1. Machines, loads, shunt capacitors, and shunt reactors shall all be representable separately at each bus.
2. Loads shall be representable as scheduled mw and mvar.
3. Shunt admittances shall be representable in per-unit as follows:
   (a) Fixed[5] admittance
   (b) Switched capacitor in steps with on and off voltages
   (c) Switched reactor in steps with on and off voltages
4. Machines shall be representable as follows:
   (a) Scheduled voltage magnitude and angle (swing).
   (b) Scheduled mw and voltage magnitude, with or without mvar limits. In event mvar limit is reached, voltage schedule is no longer held.
   (c) Scheduled mw and mvar, with or without voltage limits. In event voltage limit is reached, mvar schedule is no longer held.
   (d) Scheduled mw and variable mvar to hold voltage on remote bus. Provision shall be made at 50 voltage controlled buses for the controlling action to be shared in scheduled proportion among the reactive outputs of up to 5 remote machines.
5. Buses shall be identified by name rather than number. Bus name shall include bus voltage base.

C. Branches

1. Branch impedance (R+jX) and admittance (G+jB) are to be entered in per unit on mva base or bases as specified by user.
2. Program shall provide means for series-parallel combinations of passive elements, (lines, transformers, capacitors, etc.) without intervening active elements (generators, mw scheduled loads) to be combined into equivalents for calculation purposes and restored in detail in the output.
3. There shall be no restrictions on the magnitude or sign of branch impedances. Zero,[6] low value or negative impedances shall be acceptable.
4. Pi elements having unequal legs shall be acceptable.
5. Parallel lines shall be permitted with identity retained.
6. Branches shall be identified by terminal bus names. Branch numbers shall not be required.

7. Provision shall be made for line current ratings and transformer mva ratings for overload checking.
8. Provision shall be made for calculating line currents at terminals on selected lines.

D. Transformers & Phase Shifters

1. Fixed tap transformer ratios shall be entered in kv.
2. LTC transformer voltage range and step size shall be specified for each transformer. Provision for automatic impedance adjustment shall be made.
3. LTC transformer shall provide voltage or var control at user option.
4. Phase shifters shall have power or angle subject to user schedule. Phase shifters shall be of type having 1:1 voltage ratio. Phase shifter impedance adjustment with step change shall be automatic. Phase shifter angle range and step size shall be specifiable by user.

E. Area Interchange Control

1. Each area to have individual swing machine.
2. Area tie lines shall be identified in the branch input data by the user. Either end of the tie branch shall be the metering point as specified for the particular branch by the user. It shall be possible to assign any type branch (line, series capacitor, transformer, etc.) as a tie line.
3. It shall be possible to combine individual interchange areas into larger interchange areas without changing bus or branch cards.
4. Area interchange tolerance shall be specifiable by user.

F. DC Lines

Representation of direct current lines in the load flow program shall be compatible with that of the stability program.

G. Solution Techniques

1. The basic solution method shall provide essentially exact results with reasonable amount of machine time for size of system. Essentially exact results shall mean less than 0.0001 pu power error per bus and less than 0.01 pu power error for system.
2. Solution method shall provide a rough tie line check prior to first voltage balance in order to prevent possible solution failure or abnormal machine time due to concentration of initial area interchange errors (due to inaccurate load, generation, or loss estimates) on main swing machine.
3. Any net bus mismatch in an interchange area shall be balanced out by the swing machine for that area.

4. Area interchange shall be measured by summing tie lines at specified metering points rather than by any other method involving loads, losses and generation.
5. Transformer LTC solution shall permit multiple step tap corrections in a single tap change when large tap changes are required.

H. Output

1. Output shall include bus names, voltage magnitude in per unit and kv, angle in degrees, mw and mvar of all machines, loads, shunt devices, and flows at each end of all branches, and terminal current in amperes of selected lines.
2. All transformer LTC tap values and phase shifter angle settings shall appear with the particular branch readings.
3. Whenever line or transformer ratings are exceeded, the readings shall be flagged.
4. Whenever bus voltage or machine mvar limits have been reached or exceeded, the appropriate readings shall be flagged.
5. Branch mw and mvar losses shall be listed with the particular branch flow.
6. Bus and branch output data shall be listed in alphabetical bus name order within interchange area groupings.
7. Area interchange summary shall be provided showing desired and actual net interchange, area total losses, generation, and load, area swing generation, tie line flows, net area bus mismatch, maximum bus mismatch, spinning reserve.
8. Provision shall be made to summarize losses by a code other than interchange area.
9. A generator summary shall be provided listing individual bus voltage, mw and mvar, desired voltage, mvar limits and remotely controlled bus data.
10. A transformer LTC summary shall be provided listing final tap, voltage held, desired voltage, maximum and minimum ratios.
11. A total summary shall be made listing certain appropriate solution diagnostics, tolerances, total iterations, if any, number of tap changes, number of area interchange operations, total losses, total generation, total load, total number of buses, total number of branches.
12. Over and under-voltage buses shall be summarized.
13. Overloaded branches shall be summarized.
14. Provision shall be made to list all input data alphabetically by interchange area.
15. Date and case number shall appear on each page.
16. Unlimited title remarks shall be permitted at beginning of case.
17. All summaries shall list data in alphabetic order within interchange area grouping. All summaries should precede bus and branch output data.
18. A limited output option shall be provided in which specified areas or individual specified items are included.

I. Map Print Out

A load flow diagramatic output provision is to be included in the program with the following features:

1. Items to be available for call-out shall include bus voltage and angle, mw and mvar of any branch, machine, load, or shunt device, transformer LTC or phase shifter angle.
2. Location of readings shall have complete coordinate freedom and not be restricted to word length modules.
3. It shall not be necessary to call out readings in pairs if not desired, such as mw and mvar or voltage and angle.
4. Provision shall be made for rounding of readings to nearest specified unit.

J. Change Cases

1. Change cases shall be effected by entering changes only. Unchanged data shall not require repeating such as when only part of the data on a bus card is changed.
2. Provision shall be made to inactivate certain portions of the total system in order to study one portion in detail. The inactivation® shall be by a short-cut method such as by simply opening certain tie lines rather than by entering deletions for all buses and branches to be inactivated.
3. A provision shall be made for changing load magnitude by scheduled percentage. It shall be possible to have separate schedules for watts and vars and separate schedules for each interchange area. Provision shall also be made to omit certain specified buses from the load change.

K. Associated Subroutine Options

1. Provision shall be made to form mathematical equivalents for areas not required in detail.

PART III, STABILITY PROGRAM

A. System Limits

1. 2000 buses from the load flow plus those necessary for machine representation.
2. 3000 branches from the load flow plus those necessary for machine representation.
3. 600 machines.
4. 10 two-terminal DC lines.
5. 5 three-terminal DC lines.
6. Unlimited® switching of branches, loads, generation and faults.

7. Transformers and phase shifters from the load flow.
8. 200 line relays.
9. 100 series capacitor gaps.

B. Load Representation

1. Each bus load (mw & mvar) shall be representable as any desired combination of constant current, constant mva, constant impedance and frequency sensitivity.
2. Load shedding at any 500 buses in at least five frequency and five voltage steps shall be possible. The load shed with each voltage or frequency step and the voltage and frequency step size shall be an input option variable at each load shedding bus.
3. Constant power[11] loads near fault points shall be adjusted during fault periods to prevent solution failure.

C. Machine Representation

1. Synchronous Machines

Each synchronous machine may be representable in any one of the following degrees of detail at the option of the user:

(a) Constant voltage behind reactance, with or without[12] inertia.
(b) Two-axis saliency with or without main-field saturation, i.e., with X'_d, X'_q, X_d, X_q, T'_{do} and inertia.
(c) Up to 10 machines may be represented as having two-axis saliency with or without main-field saturation, and amortisseur damping and using the following differential equations to determine synchronizing and damping electrical torques directly:

Direct and quadrature axis components of terminal voltage,

$$V_d = \frac{d\lambda_d}{dt}^{(14)} - w\lambda_q - i_d r_a$$

$$V_q = \frac{d\lambda_q}{dt}^{(14)} + w\lambda_d - i_q r_a$$

where λ_d, λ_q, and r_a are armature quantities.

Field Voltage,

$$V_f = \frac{d\lambda_f}{dt} - i_f r_f$$

where λ_f, i_f, and r_f are field quantities.

Amortisseur damping:

$$\frac{d\lambda_q}{dt} = i_q r$$

$$\frac{d\lambda_d}{dt} = i_d r$$

where λ_q, λ_d, and r are amortisseur quantities.

(d) Shaft damping shall be representable as $K \frac{d}{dt}$.

Where K is the shaft damping coefficient.

2. Provision shall be included for the accurate representation of induction motors and mechanical load and inertia.

3. Excitation Systems

(a) Each synchronous machine shall be represented with constant field voltage or with an automatic excitation system as specified by input.

(b) The excitation system models to be used shall be formed by digitally simulating a desired analog block diagram for each type of regulator-exciter system to be represented. The number and makeup of the block diagrams shall be easily changeable to provide for the addition of new systems and modification of block diagrams. Initial models shall include those of IEEE Paper No. 31T67-424 except that continuously-acting regulator blocks shall provide for two time lag functions. Also, supplemental control from the sum of two designated quantities through up to four® lead-lag functions and a limiter shall be provided for continuously-acting systems.

4. Prime Mover Systems

All governor systems shall be representable in the following degrees of detail at the option of the user:

(a) No governor, i.e., constant power input.

(b) Hydro governor with control, reset, servo and water-hammer transfer functions.

(c) Steam-turbine governor with control, servo, valve and transfer functions for tandem, tandem-compound, and cross-compound reheat and non-reheat turbines.

(d) Boiler control systems.

(e) The governor representation shall include provision for fast turbine valving to follow steam-valve manipulation as defined by the user.

(f) The governor representation shall include supplemental control[16] similar in form to the supplemental excitation control described in 3 (b).

D. Direct Current Line Representation

1. Operating modes

   (a) Constant power
   (b) Constant current
   (c) Power modulation by function of AC system angles

2. Terminal control equipment shall be simulated accurately for dynamic conditions. Approximate[16] representation also shall be available.

E. Automatic System Actions

1. Tie-line frequency biased "Load Control"[16] shall be available for 60 control areas with access to any machines designated.
2. Automatic line tripping on 200 lines with or without single shot reclosing shall be provided utilizing the following optional relay systems:

   (a) Impedance characteristic with circle passing through origin, with or without swing blocking zones.
   (b) Directional time-overcurrent characteristic.[16]
   (c) Out-of-step characteristic[16]
   (d) Over-power with time delay characteristic[16]
   (e) Power biased rate-of-change of power flow characteristic.

3. On each line having one of the above relay systems, it shall be possible to initiate a switching operation such as a transfer trip to another location.

4. On each of 20 lines having the above relay systems, it shall be possible to initiate transfer trip operations to 5 other lines, loads or generators.

5. It shall be possible to simulate series capacitor gap operation at 100 locations. Gap operation and capacitor reinsertion each shall be controllable as a function of current.

6. Provision shall be made for generator braking[17] resistors at 20 locations. Control of the braking resistor shall be based upon machine accelerating power or frequency deviation, at the option of the user. It shall be possible to apply the resistor in steps, based upon increments of the controlling factor. Time delay in application and length of application time shall be designated by user.

F. Output

1. Automatic plotting data for at least 100 axes containing up to 15 curves per axis for the following variables shall be available: Selected items shall be available for on-line machine plotting.

Bus voltage and angle
Bus frequency deviation in Hertz
Field voltage
Field current
Generator Internal Voltage, e'q
Main-field saturation
Generator mechanical power
Generator electrical power
Quadrature-axis angle
Damping torque
Generator Rotor Slip, Hertz
Machine var output
Summation of P & Q[9] for any number of specified loads, generators, and lines in selected areas
Exciter saturation
Excitation or governor supplemental control signal output
Regulator output
Governor torque change[9]
Accelerating power
Apparent line impedance
AC line power flow mw & mvar
Relative generator angle
Tie line frequency control[9]
DC line power flow
DC line firing angle
DC line current
DC voltages
Rate of change of power[9] on branches

2. Printed output shall include all variables listed in F.1. above for each calculation time interval, or any selected integral value of it, with no restrictive limits on the number of variables chosen for output. Output form of AC quantities shall be mw and mvar on flows, polar form on currents, voltages and apparent impedances. Provision shall be made to tabulate from the output tape any variable or variables as functions of time.

3. All automatic operations shall be summarized in the printed output.

G. Program Operation

1. The program shall be capable of accepting either punched-card or magnetic-tape input at the option of the user. The load-flow history-tape also shall be compatible as input to the stability program.

2. The stability program logic shall check for zero-minus balance errors and print diagnostics.

3. Results of stability calculations shall be stored on magnetic tape in such form that it may be used for later analysis.

4. The calculation time interval for solution of control systems can be different[18] from the time step used in solution of the swing equation.

5. Provisions[9] shall be included to output system conditions at pre-selected time intervals on magnetic tape for future continuation of the study.

6. At users option,[9] loss of synchronism of individual machines shall not automatically terminate a run. Such machines should be shed according to applicable relaying techniques or by area separation and the run continued if desired.

Footnote:

The Western Systems Coordinating Council ad hoc committee preparing these specifications consisted of P. A. Oakes, Chairman, Idaho Power; H. M. Ellis, British Columbia Hydro; R. G. Farmer, Arizona Public Service; M. H. Kent, Southern California Edison; E. W. Kimbark, Bonneville Power Administration; R. L. Krahn, Corps of Engineers; H. R. Perry and J. F. Luini, Pacific Gas & Electric; C. L. Rose, Bureau of Reclamation; and W. J. Martin, Public Service of Colorado.

The deviations and limitations listed below apply to the BPA program and pertain to the items indicated in the WSCC specifications only. Additional features available in the BPA Power Flow and Transient Stability Programs are covered in the respective BPA program manuals.

1. NON ANSII STANDARD FORTRAN

2. 3000 TRANSFORMERS WITH 200 LIMIT ON LTC TYPE

3. 600 MAXIMUM

4. UP TO 5 MULTITERMINAL LINES EACH WITH UP TO 10 TERMINALS

5. FIXED OR ADJUSTABLE ADMITTANCE

6. NOT ALLOWED

7. TIELINE IDENTIFICATION IS NOT REQUIRED PROGRAM DETERMINES LINES BY COMPARISON WITH ZONES.

8. NOT AVAILABLE USE OF CUTTING PROGRAM AVAILABLE AND ACCOMPLISHES THE SAME THING.

9. NOT AVAILABLE

10. 40 MAXIMUM

11. CONSTANT CURRENT LOADS ALSO

12. MACHINE WITHOUT ENERTIA NOT ALLOWED

13. NOT REPRESENTED

14. TERM IGNORED

15. THREE MAXIMUM

16. NOT REPRESENTED

17. LIMITED BRAKING FEATURE AVAILABLE

18. THE TIME INTERNAL FOR SOME CONTROL SYSTEMS CAN BE DIFFERENT.

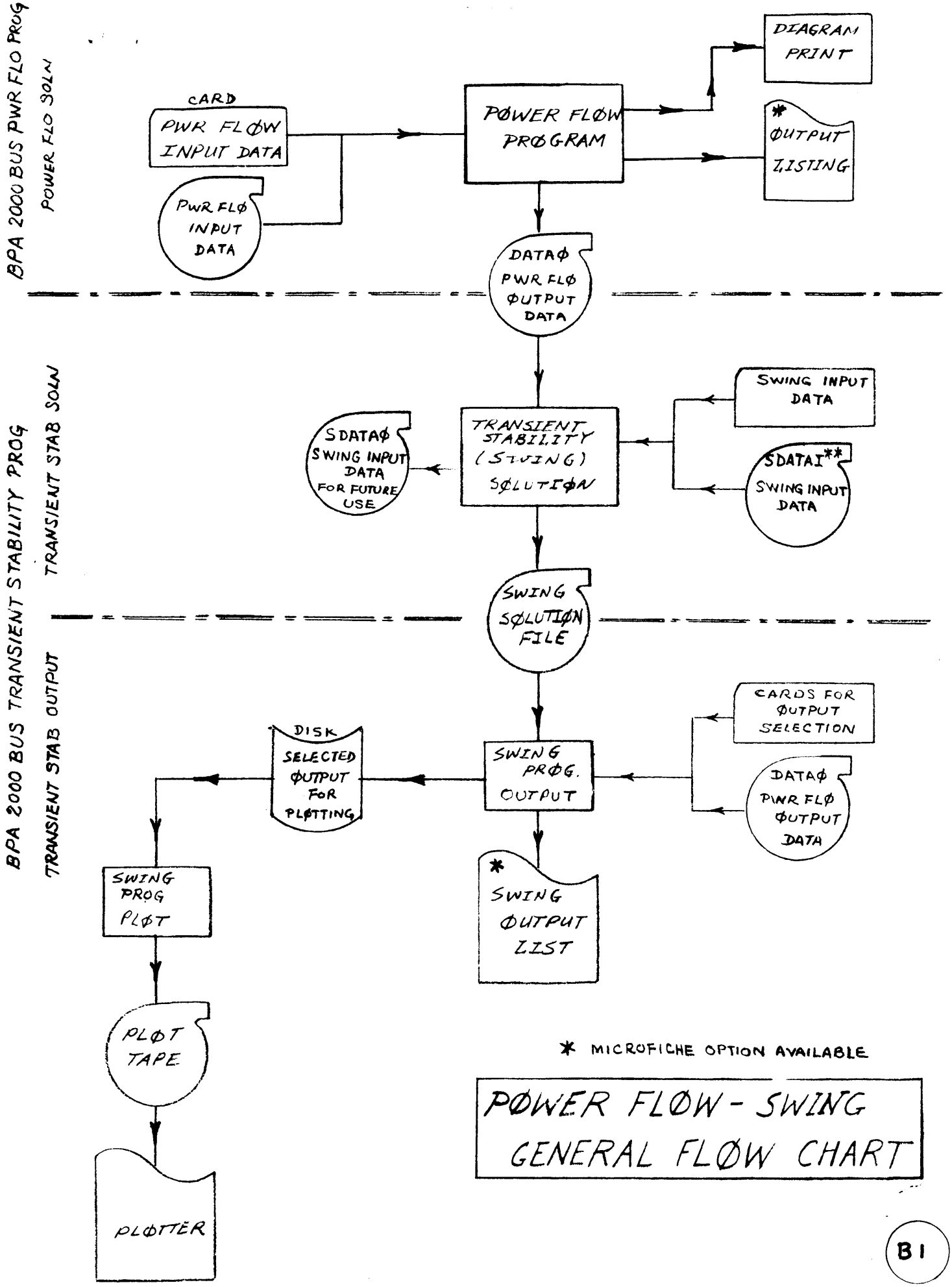
BPA 2000 BUS PWR FLO PROG
POWER FLO SOLN
CARD
PWR FLØW INPUT DATA
PWR FLØ INPUT DATA
PØWER FLØW PRØGRAM
DIAGRAM PRINT
* ØUTPUT LISTING
DATAØ PWR FLØ ØUTPUT DATA
BPA 2000 BUS TRANSIENT STABILITY PROG
TRANSIENT STAB SOLN
TRANSIENT STABILITY (SWING) SØLUTIØN
SWING INPUT DATA
SDATAØ SWING INPUT DATA FOR FUTURE USE
SDATAI** SWING INPUT DATA
SWING SØLUTIØN FILE
BPA 2000 BUS TRANSIENT STABILITY PROG
TRANSIENT STAB OUTPUT
CARDS FOR ØUTPUT SELECTION
DISK SELECTED ØUTPUT FOR PLØTTING
SWING PRØG. OUTPUT
DATAØ PWR FLØ ØUTPUT DATA
SWING PROG PLØT
* SWING ØUTPUT LIST
PLØT TAPE
PLØTTER
* MICROFICHE OPTION AVAILABLE
PØWER FLØW - SWING GENERAL FLØW CHART

```
* * *
* * * EXAMPLE SWING DATA INPUT FILE FOR USING A SAVED DATA FILE
* * *
DEBUG                11
CASE PFDC2               SAVE
      SWING INPUT DATA DECK
      WSCC 9 BUS TEST    USING 2-TERM. DC LOGIC
      NO FAULT
      SAMPLE CASE FOR USING A SAVED DATA FILE CALLED SAVE
LS  RECTFIER113.  NORTH   500.     -2   0.0
FF      2.0 360.
90
MH
BH
B  STATIONS500.  1  1
B  STATIONN500.  1  1
B  RECTFIER113.  1  1
B  INVERTER113.  1  1
GH
G  SOUTH G120.     1  1
LH
LC STATIONN500. STATIONS500. 2    1     1
DH
D  INVERTER113.                1  1  1  1                    3
D  RECTFIER113.                1  1  1  1                    3
99
* * *
* * * FILE ASSIGNMENTS FOR THIS CASE
* * *
$! SWING INPUT DATA FILE
$ ASSIGN DRB0:[EOGATRR]2DC.SWI FOR005
$! SWING SAVED DATA FILE
$ ASSIGN DRB0:[EOGATRR]2DC.SDI FOR009
$! POWER FLOW OUTPUT DATA FILE
$ ASSIGN DRB0:[EOGATRR]2DC.BSE FOR003
$! SWING SOLUTION FILE
$ ASSIGN DRB0:[EOGATRR]2DC.SOL FOR008
$! SWING OUTPUT FILE
$ ASS DRB0:[EOGATRR]2DC.OUT FOR006
```

```
* * *
* * * EXAMPLE SWING DATA INPUT FILE FOR CREATING A SAVED DATA FILE
* * *
DEBUG                11
CASE PFDC2                          SAVE
      SWING INPUT DATA DECK
      WSCC 9 BUS TEST    USING 2-TERM. DC LOGIC
      NO FAULT
      SAMPLE CASE FOR CREATING A SAVED DATA FILE CALLED SAVE
LS  RECTFIER113.  NORTH   500.     -2   0.0
M  NORTH G120.  100.  .95   1
MF NORTH G120.0 1042.51.01.0377.  52.2770.37301720017100 5.51.8
MC NORTH G220.0 40000.              .01
MC NORTH G320.0 40000.              .01
MC SLACK   20.0 40000.              .006
MC SOUTH G120.0 60000.              .006
D  RECTFIER113.      .09  .03 4.60 .0125 249.P 1.2   0. 100.
D  INVERTER113.      .09  .03 4.60 .0125 249.P 1.2  .10 100.
LN RECTFIER113.
LN INVERTER113.
FF      2.0 360.
90
MH
BH
B  STATIONS500.  1  1
B  STATIONN500.  1  1
B  RECTFIER113.  1  1
B  INVERTER113.  1  1
GH
G  SOUTH G120.     1  1
LH
LC STATIONN500. STATIONS500. 2    1     1
DH
D  INVERTER113.                1  1  1  1                    3
D  RECTFIER113.                1  1  1  1                    3
99
* * *
* * * FILE ASSIGNMENTS FOR THIS CASE
* * *
$! SWING INPUT DATA FILE
$ ASSIGN DRB0:[EOGATRR]2DC.SWI FOR005
$! SWING SAVED DATA FILE
$ ASSIGN DRB0:[EOGATRR]2DC.SDI FOR015
$! POWER FLOW OUTPUT DATA FILE
$ ASSIGN DRB0:[EOGATRR]2DC.BSE FOR003
$! SWING SOLUTION FILE
$ ASSIGN DRB0:[EOGATRR]2DC.SOL FOR008
$! SWING OUTPUT FILE
$ ASS DRB0:[EOGATRR]2DC.OUT FOR006
```

```
* * *
* * * EXAMPLE SWING DATA INPUT FILE FOR OUTPUT AND PLOT ONLY
* * *
90
MH
BH
B  STATIONS500.  1  1
B  STATIONN500.  1  1
B  RECTFIER113.  1  1
B  INVERTER113.  1  1
GH
G  SOUTH G120.     1  1
LH
LC STATIONN500. STATIONS500. 2    1     1
DH
D  INVERTER113.                1  1  1  1                    3
D  RECTFIER113.                1  1  1  1                    3
99
* * *
* * * FILE ASSIGNMENTS FOR THIS CASE
* * *
$! SWING INPUT DATA FILE
$ ASSIGN DRB0:[EOGATRR]2DC.SWI FOR005
$! POWER FLOW OUTPUT DATA FILE
$ ASSIGN DRB0:[EOGATRR]2DC.BSE FOR003
$! SWING SOLUTION FILE
$ ASSIGN DRB0:[EOGATRR]2DC.SOL FOR008
$! SWING OUTPUT FILE
$ ASS DRB0:[EOGATRR]2DC.OUT FOR006
```

BONNEVILLE POWER ADMINISTRATION

FORTRAN CODING FORM

Requested by _____ Ext No. _____ Job code _____ Project _____ Sheet ____ of ____

Statement No.	Cont.	STATEMENT	Identification

```
EXAMPLE #1
LS  BUS AA   230  BUS BB   230  1   3   0.0                75.
LS  BUS BB   230                   4   0.0                                -50
LS  BUS AA   230 -BUS BB   230     3   4.0
LS -BUS KK   230 -BUS LL   230  1      4.0
LS  BUS KK   230  BUS LL   230  2      4.0
LS -BUS KK   230 -BUS LL   230  2      8.0
LS  BUS KK   230  BUS LL   230  1      8.0
LZ  BUS KK   230  BUS LL   230  2          1.588  0.0023  0.01263      1.588
```

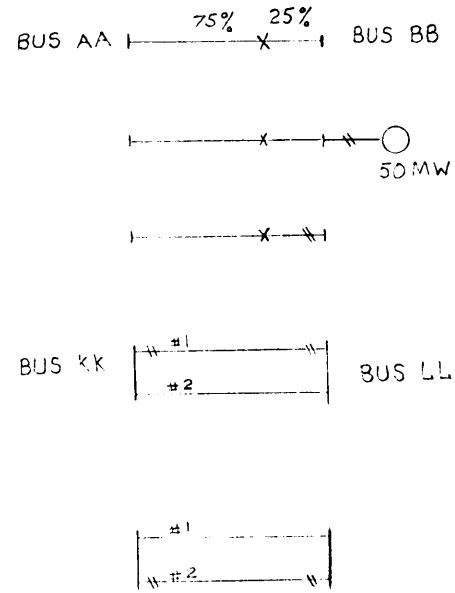

Example 1

1. The LS card indicates a short circuit on line AABB at an intermediate point 75% from Bus AA at 0.0 cycles.

2. The LS card drops 50MW of generation at Bus BB, also at 0.0 cycles.

3. The LS card maintains the short circuit on line AABB with breaker at Bus BB tripped at 4.0 cycles.

4. & 5. The next two LS cards modify the branch impedance of the line between Buses KK and LL. The first card switches out the original line parallel No. 1 and the next card switches in the new line parallel No. 2 which was not used in the power flow program. This line being completely new requires its proper impedance defined using LZ card below. See card No. 8.

6. & 7. The next two LS cards restore the branch impedance of the line between Buses KK and LL to its original value. The first card swtiches out the new parallel and the next card switches in the original line.

8. LZ card contains the proper line impedance for the new line KKLL parallel No. 2.

Note: The ordering of the LS cards must be chronological as determined by the time in cycles, cols 40-45, at which each event occurs. Only one line or bus may be faulted for each case and the LS card defining the fault at 0.0 cycles must be placed first of all the LS cards.

Requested by _____ Ext No. _____ Job code _____ BONNEVILLE POWER ADMINISTRATION **FORTRAN CODING FORM** Project _____ Sheet ____ of ____

EXAMPLE #2

Statement No.	CONT	STATEMENT								Identification
1.		LS	BUS I	230	BUS J	230	2	0.0		
2.		LS	-BUS I	230	BUS K	230		4.0		
3.		LS	BUS M	230			4	4.0	-25	
4.		LS	BUS I	230	BUS J	230	-2	8.0		
5.		LS	BUS I	230	BUS K	230		8.0		

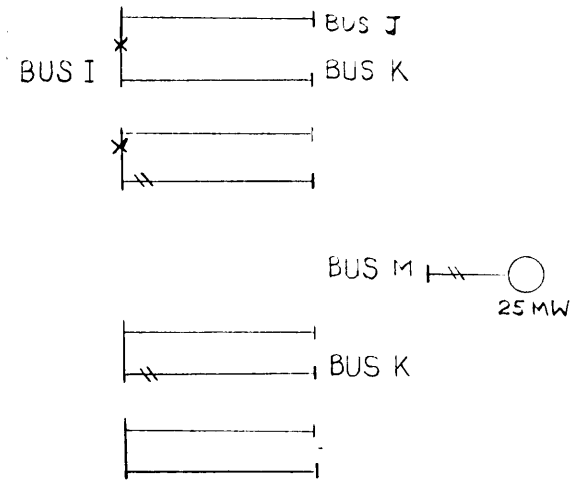

Example 2

1. The LS card with column 37 set to "2" places a short circuit on Bus I at 0.0 cycles. Branch IJ is any branch connected to Bus I.
2. The LS card trips line breaker at Bus I for Line IK at 4.0 cycles.
3. The LS card drops 25MW of generation at Bus M also at 4.0 cycles.
4. The LS card with column 37 set to "-2" clears the fault at 8.0 cycles. Same Branch IJ as step 1 above must be used.
5. The LS card recloses Line IK breaker at Bus I at 8.0 cycles.

Note: The ordering of the LS cards must be chronological as determined by the time in cycles, cols 40-45, at which each event occurs. Only one line or bus may be faulted for each case and the LS card defining the fault at 0.0 cycles must be placed first of all the LS cards.

REV1 4/18/75

Requested by _____ Ext No. _____ Job code _____

BONNEVILLE POWER ADMINISTRATION
FORTRAN CODING FORM

Project _____ Sheet ____ of ____

Statement No.	CONT	STATEMENT	Identification

EXAMPLE #3

```
1.  LS  BUS A   230  BUS B   230   1   0.0
2.  LS -BUS A   230  BUS B   230   1   4.0
3.  LS -BUS A   230 -BUS C   230       4.0
4.  LS  BUS A   230                4   4.0                    -20
5.  LS -BUS A   230 -BUS B   230  -1   8.0
6.  LS  BUS A   230  BUS C   230       8.0
7.  LS  BUS C   230                4   8.0 -10. -7.0
8.  LS  BUS C   230                4  12.0  4.0  3.0
```

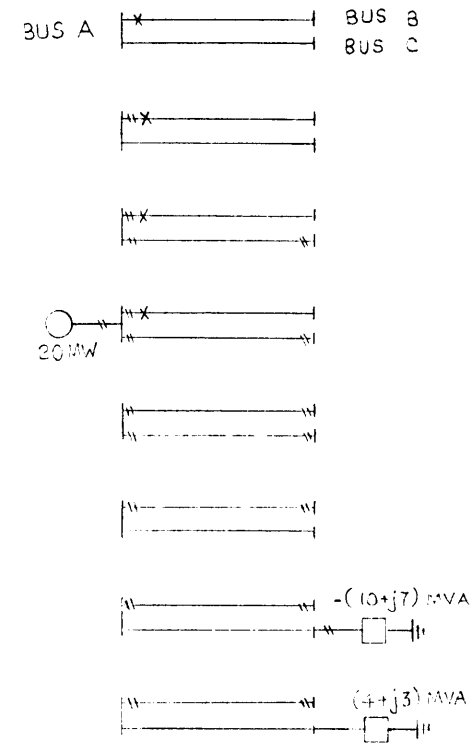

Example 3

1. The LS card identifies line AB with column 37 set to "1" indicating a line fault at Bus A at time 0.0 cycles.
2. The LS card indicates that the fault is still maintained at 4.0 cycles but with the breaker at Bus A tripped.
3. The LS card trips line AC at both ends at 4.0 cycles.
4. The LS card drops 20MW of generation at 4.0 cycles.
5. The LS card trips both ends of line AB and the fault is cleared at 8.0 cycles.
6. The LS card recloses line AC at 8.0 cycles.
7. The LS card dumps constant impedance load at Bus C also at 8.0 cycles.
8. The LS card restores part of the constant impedance load at Bus C at 12.0 cycles as the final modification for this example.

Note: The ordering of the LS cards must be chronological as determined by the time in cycles, cols 40-45, at which each event occurs. Only one line or bus may be faulted for each case and the LS card defining the fault at 0.0 cycles must be placed first of all the LS cards.

Requested by _____ Ext No. _____ Job code _____

BONNEVILLE POWER ADMINISTRATION
FORTRAN CODING FORM

Project _____ Sheet ____ of ____

Statement No. | CONT | STATEMENT | Identification

TYPICAL DATA

RESISTANCE BRAKE

RB	NAME 1	KV1	NAME 2	KV2	NAME 3	KV3	PBRAKE	PDROP	VDROP	TW	TMAX	TMIN	TINSRT	PBIAS
RB	JOHN DAY	13.8	JOHN DAY	230	CHIEF JO	230	1400	475	85	10	30	0	8	0

RESISTANCE BRAKE
EARLY DISCONNECT

RC	NAME 4	KV4	HD	NAME 5	KV5	HD	HD	NAME 3	KV3	T1 / M	T2 / D'	T3	TDISC	LDISC	PCBIAS	TBLOCK
RC	JOHN DAY	500		GRIZZLY	5001			CHIEF JO	230	0.	1	0.	4	0	800	12

D-4

REV 7/28/75

Requested by _____ Ext No. _____ Job code _____

BONNEVILLE POWER ADMINISTRATION

FORTRAN CODING FORM

Project _____ Sheet ____ of ____

Statement No.	CONT	STATEMENT	Identification

FAST VALVING EXAMPLE

```
LS   GEN2 HI 230.   STA A   230.      -1   0.0
LS   GEN1    16.5                     8   0.0    100.  0.0   20.   1.0
LS  -GEN2 HI 230.  -STA A   230.      -1   5.0
LS   GEN1    16.5                     8  60.0    20.   1.0   30.   2.5
LS   GEN1    16.5                     8  150.    30.   2.5   100.  3.5
LS   GEN1    16.5                     8  210.    100.  3.5   100.  5.0
```

FAST VALVING

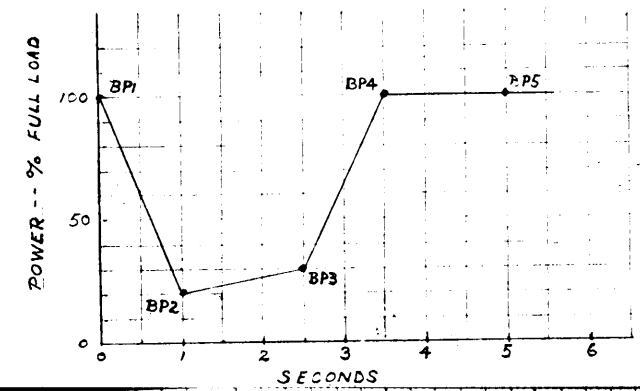

An Example Using the Fast Valving Switching Cards

The example shows how the fast valving cards are arranged in conjunction with other types of switching cards. This example describes the power decay curve shown on this sheet. Please note that the first switching card must be fault card (or a psuedo fault card if there is to be no fault) as in this example.

REV 7/28/75

```
CASE PFDC2          1
      WSCC 9 BUS TEST TWO TERMINAL DC LINE RAMPING
      RAMP CURRENT DOWN A TOTAL OF 500 KILO AMPS
      IN 5 STEPS OF 100 KILO AMPS
LS  STATIONN500.  STATIONS500. 2   -1   0.0
LS  RECTFIER113.                8   5   2.0        -100.
LS  RECTFIER113.                8   5   4.0        -100.
LS  RECTFIER113.                8   5   6.0        -100.
LS  RECTFIER113.                8   5   8.0        -100.
LS  RECTFIER113.                8   5   10.0       -100.
M  NORTH G120.  100.  .95   1
MF NORTH G120.0 1042.51.01.0377.  52.2770.37301720017100 5.51.8              2
MC NORTH G220.0 40000.              .01
MC NORTH G320.0 40000.              .01
MC SLACK   20.0 40000.              .006
MC SOUTH G120.0 60000.              .006
D  RECTFIER113.      .09  .03 4.60  .012 249.I 1.2   0. 100.                  1
D  INVERTER113.      .09  .03 4.60  .012 249.I 1.2  .10 100.                  1
LA SOUTH   500.            1.0  1.0
LA STATIONN500.            1.0  1.0
LA STATIONS500.            1.0  1.0
LN RECTFIER113.
LN INVERTER113.
FF      2.  50.
90
MH
GH
G  NORTH G120.     1  1  1  1  1  1  1  1  1  1
BH
B  STATIONN500.  4  4
LH
L  STATIONN500. STATIONS500. 1    1  1  1 .5     -.3    .6     -.2
LC STATIONN500. STATIONS500. 1    1
DH
D  INVERTER113. RECTFIER113.   1 1 1 1 1 1                    1 1
99 11111111111
```

TRR 9/26/86

D-6

```
CASE PFDC2          1
      WSCC 9 BUS TEST MULTI TERMINAL DC LINE RAMPING
      RAMP CURRENT DOWN A TOTAL OF 500 KILO AMPS
      IN 5 STEPS OF 100 KILO AMPS
LS  STATIONN500.  STATIONS500. 2   -1   0.0
LS  RECTFIER113.                6   6   2.0        -100.
LS  RECTFIER113.                6   6   4.0        -200.
LS  RECTFIER113.                6   6   6.0        -300.
LS  RECTFIER113.                6   6   8.0        -400.
LS  RECTFIER113.                6   6   10.0       -500.
M  NORTH G120.  100.  .95   1
MF NORTH G120.0 1042.51.01.0377.  52.2770.37301720017100 5.51.8                2
MC NORTH G220.0 40000.              .01
MC NORTH G320.0 40000.              .01
MC SLACK   20.0 40000.              .006
MC SOUTH G120.0 60000.              .006
D  RECTFIER113.      .09  .03 4.60  .012 249.I 1.2   0. 100.                   1
D  INVERTER113.      .09  .03 4.60  .012 249.I 1.2  .10 100.                   1
LA SOUTH   500.             1.0  1.0
LA STATIONN500.             1.0  1.0
LA STATIONS500.             1.0  1.0
LN RECTFIER113.
LN INVERTER113.
FF      2.  50.
90
MH
GH
G  NORTH G120.     1  1  1  1  1  1  1  1  1  1
BH
B  STATIONN500.  4  4
LH
L  STATIONN500. STATIONS500. 1    1  1  1 .5     -.3    .6     -.2
LC STATIONN500. STATIONS500. 1    1
DH
D  INVERTER113. RECTFIER113.   1 1 1 1 1 1                    1 1
99 11111111111
```

TRR 9/26/86

D-7

```
DEBUG                11
CASE PFDC4          1
   WSCC 9 BUS TEST MULTI TERMINAL DC LINE SWITCHING
   DUMMY AC FAULT AT 0.0 CYCLES (REQUIRED)
   DC FAULT ON INVERT 1 113KV AT 0.0 CYCLES
   BLOCK RECTFIER 113KV AT 6.0 CYCLES
   BLOCK RECTF 2 113KV AT 6.0 CYCLES
   CLEAR DC FAULT ON INVERT1 113KV AT 8.0 CYCLES
   UNBLOCK RECTFIER 113KV AT 10. CYCLES
   UNBLOCK RECT 2 113KV AT 10. CYCLES
LS  SOUTH   500.  STATIONS500. 1   -1   0.0
LS  INVERT 1113.                1   6   0.0
LS  RECTFIER113.                4   6   6.0
LS  RECTF 2 113.                4   6   6.0
LS  INVERT 1113.               -1   6   8.0
LS  RECTFIER113.               -4   6   10.
LS  RECTF 2 113.               -4   6   10.
MC NORTH G320.0 40000.               .01
MC SLACK   20.0 40000.               .006
MC SOUTH G120.0 60000.               .006
D  RECTFIER113.     .09   .03 8.15  .013 600.P 1.8   0. 100.  .05  .05 .3
D  RECTF 2 113.     .09   .03 8.15  .013 600.P 1.2   0. 100.  .05  .05 .31
D  INVERT 2113.     .09   .06 23.3  .011 600.P 1.2.135  100.  .05  .05 .33
D  INVERT 1113.     .09   .06 23.3  .011 600.P 1.8      100.  .05  .05 .33
LN RECTF 2 113.
LN INVERT 2113.
LN INVERT 1113.
LN RECTFIER113.
LB SOUTH   500.                 1.0  1.0                           1.0
LB NORTH   500.                 1.0  1.0                           1.0
LB STATIONN500.                 1.0  1.0                           1.0
LB STATIONS500.                 1.0  1.0                           1.0
LB RECTFIER113.                 1.0  1.0                           1.0
FF      2.0 20.
90
MH    120.                                   20.
DH
D  RECTFIER113. INVERT 1113.   3 3 3 3 3 3                     3 3
D  RECTF 2 113. INVERT 2113.   3 3 3 3 3 3                     3 3
99 111111
```

TRR 9/26/86

D-8

```
CASE PFDC2          1
      WSCC 9 BUS TEST MULTI TERMINAL DC LINE SWITCHING
      DUMMY AC FAULT AT 0.0 CYCLES (REQUIRED)
      REDUCE POWER ORDER AT INVERT 1 113KV TO 0.0 AT 2.0 CYCLES
      REDUCE POWER ORDER AT RECTF 2 113KV TO 0.0 AT 4.0 CYCLES
      LINE WILL CONTINUE TO OPERATE AT IMIN AMPS DUE TO
      MINIMUM CURRENT LIMITATION
LS  STATIONN500.  STATIONS500. 2   -1   0.0
LS  INVERT 1113.               7   6   2.0        -9
LS  RECTFIER113.               7   6   4.0        -9
MC NORTH G120.0 40000.              .01
MC NORTH G220.0 40000.              .01
MC NORTH G320.0 40000.              .01
MC SLACK   20.0 40000.              .006
MC SOUTH G120.0 60000.              .006
D  RECTFIER113.     .09   .03 8.15  .013 600.P 1.8   0. 100.  .05  .05 .3
D  RECTF 2 113.     .09   .03 8.15  .013 600.P 1.2   0. 100.  .05  .05 .31
D  INVERT 2113.     .09   .06 23.3  .011 600.P 1.2.135  100.  .05  .05 .33
D  INVERT 1113.     .09   .06 23.3  .011 600.P 1.8      100.  .05  .05 .33
LN RECTF 2 113.
LN INVERT 2113.
LN INVERT 1113.
LN RECTFIER113.
LB SOUTH   500.                1.0  1.0                          1.0
LB NORTH   500.                1.0  1.0                          1.0
LB STATIONN500.                1.0  1.0                          1.0
LB STATIONS500.                1.0  1.0                          1.0
LB RECTFIER113.                1.0  1.0                          1.0
FF      2.0 20.
90
MH    120.                                   20.
DH
D  RECTFIER113. INVERT 1113.   3 3 3 3 3 3                    3 3
D  RECTF 2 113. INVERT 2113.   3 3 3 3 3 3                    3 3
99 111111
```

TRR 9/26/86

D-9

```
CASE PFDC2          1
      WSCC 9 BUS TEST MULTI TERMINAL DC LINE SWITCHING
      DUMMY AC FAULT AT 0.0 CYCLES (REQUIRED)
      OPEN DC LINE RECTFIER--DC TAP1 AT 2.0 CYCLES
      RECLOSE DC LINE RECTFIER--DC TAP1 AT 8.0 CYCLES
LS  STATIONN500.  STATIONS500. 2   -1   0.0
LS -RECTFIER113. -DC TAP1 113.  5   6   2.0
LS  RECTFIER113.  DC TAP1 113.  5   6   8.0
MC NORTH G120.0 40000.              .01
MC NORTH G220.0 40000.              .01
MC NORTH G320.0 40000.              .01
MC SLACK   20.0 40000.              .006
MC SOUTH G120.0 60000.              .006
D  RECTFIER113.     .09   .03 8.15  .013 600.P 1.8   0. 100.  .05  .05 .3
D  RECTF 2 113.     .09   .03 8.15  .013 600.P 1.2   0. 100.  .05  .05 .31
D  INVERT 2113.     .09   .06 23.3  .011 600.P 1.2.135  100.  .05  .05 .33
D  INVERT 1113.     .09   .06 23.3  .011 600.P 1.8      100.  .05  .05 .33
LN RECTF 2 113.
LN INVERT 2113.
LN INVERT 1113.
LN RECTFIER113.
LB SOUTH   500.                 1.0  1.0                          1.0
LB NORTH   500.                 1.0  1.0                          1.0
LB STATIONN500.                 1.0  1.0                          1.0
LB STATIONS500.                 1.0  1.0                          1.0
LB RECTFIER113.                 1.0  1.0                          1.0
FF      2.0 20.
90
MH    120.                                   20.
DH
D  RECTFIER113. INVERT 1113.   3 3 3 3 3 3                     3 3
D  RECTF 2 113. INVERT 2113.   3 3 3 3 3 3                     3 3
99 111111
```

TRR 9/26/86

D-10

```
CASE PFDC2          1
      WSCC 9 BUS TEST MULTI TERMINAL DC LINE SWITCHING
      DUMMY AC FAULT AT 0.0 CYCLES (REQUIRED)
      DC FAULT ON RECTFIER 113KV AT 2.0 CYCLES
      BLOCK ALL RECTIFIERS ON LINE AT 4.0 CYCLES
      CLEAR DC FAULT ON RECTIFIER 113KV AT 6.0 CYCLES
      UNBLOCK ALL RECTIFIERS AT 8.0 CYCLES
LS  STATIONN500.  STATIONS500. 2   -1   0.0
LS  RECTFIER113.               1   6   2.0
LS  RECTFIER113.               3   6   4.0
LS  RECTFIER113.              -1   6   6.0
LS  RECTFIER113.              -3   6   8.0
MC NORTH G120.0 40000.              .01
MC NORTH G220.0 40000.              .01
MC NORTH G320.0 40000.              .01
MC SLACK   20.0 40000.              .006
MC SOUTH G120.0 60000.              .006
D  RECTFIER113.     .09   .03 8.15  .013 600.P 1.8   0. 100.  .05  .05 .3
D  RECTF 2 113.     .09   .03 8.15  .013 600.P 1.2   0. 100.  .05  .05 .31
D  INVERT 2113.     .09   .06 23.3  .011 600.P 1.2.135  100.  .05  .05 .33
D  INVERT 1113.     .09   .06 23.3  .011 600.P 1.8      100.  .05  .05 .33
LN RECTF 2 113.
LN INVERT 2113.
LN INVERT 1113.
LN RECTFIER113.
LB SOUTH   500.                1.0  1.0                          1.0
LB NORTH   500.                1.0  1.0                          1.0
LB STATIONN500.                1.0  1.0                          1.0
LB STATIONS500.                1.0  1.0                          1.0
LB RECTFIER113.                1.0  1.0                          1.0
FF      2.0 20.
90
MH    120.                                   20.
DH
D  RECTFIER113. INVERT 1113.   3 3 3 3 3 3                     3 3
D  RECTF 2 113. INVERT 2113.   3 3 3 3 3 3                     3 3
99 111111
```

TRR 9/26/86

D-11

BONNEVILLE POWER ADMINISTRATION

FORTRAN CODING FORM

Requested by _____ Ext No. _____ Job code _____ Project _____ Sheet ____ of ____

Statement No. | CONT | STATEMENT | Identification

LINE IMPEDANCE MODIFICATION EXAMPLE

```
L    GRIZZLY 500. MALIN    500. 3    3    3    3    .05     -.05     .05     -.05
L    GRIZZLY 500. MALIN    500. 4    3    3    3    .05     -.05     .05     -.05
LM   GRIZZLY 500. MALIN    500. 3                   1.586   .0023    .021    0.0
LM   GRIZZLY 500. MALIN    500. 3                   1.586   .0023    .0105   9.0
LM   GRIZZLY 500. MALIN    500. 4                   1.586   .0023    .021    0.0
LM   GRIZZLY 500. MALIN    500. 4                   1.586   .0023    .0105   9.0
```

If, during the execution of the solution portion of the program, a line's impedance is modified using an LZ card, it is necessary to use the Line Impedance Modification card to correctly output data for the line.

Use of the LM card will be explained by an example. Assume that the Grizzly-Malin 500-kV Line, which consists of parallels 1 and 2, is modified at 9.0 cycles by switching out parallels 1 and 2 and replacing them with parallels 3 and 4, having new impedances specified on LZ cards. In order to output the line flows and apparent impedance correctly for this line, the Output subroutine must be informed, using the LZ card, that the line impedance changed at 9.0 cycles.

The correct output card sequence to use is shown in Figure 02.

Several points about using the LM card should be noted:

1. An L card is needed for the modified line.

2. An LM card is needed for parallels 3 and 4 for both 0.0 and 9.0 cycles. The program must be told what the original impedance is as well as what the impedance is changed to at 9.0 cycles because parallels 3 and 4 are not in the original power flow.

3. **The LM cards follow the L cards and all LM cards for a line are grouped together and ordered in time sequence. (The first LM card is for 0.0 cycles, the next card is for the same parallel at 9.0 cycles).**

TRANSIENT STABILITY FILE ASSIGNMENTS

FOR001 PROGRAM NAME L1	IS A SCRATCH FILE USED TO STORE DATA DURING INPUT AND INITIALIZATION. IT IS OPENED FROM INPUT1 AND IS UNFORMATTED.
FOR002 PROGRAM NAME L2	IS A SCRATCH FILE USED TO STORE DATA DURING INPUT AND INITIALIZATION. IT IS OPENED FROM INPUT3 AND IS UNFORMATTED.
FOR003 PROGRAM NAME L3	IS THE POWER FLOW SOLUTION HISTORY FILE. IT IS OPENED FROM SWINGM AND IS UNFORMATTED.
FOR005 PROGRAM NAME L5	IS THE TRANSIENT STABILITY INPUT DATA FILE. IT IS OPENED FROM SWINGM AND IS UNFORMATTED.
FOR006 PROGRAM NAME L6	IS THE TRANSIENT STABILITY OUTPUT FILE. IT IS FORMATTED.
FOR008 PROGRAM NAME L8	IS THE TRANSIENT STABILITY SOLUTION HISTORY FILE. IT IS OPENED FROM SWINGM AND IS UNFORMATTED.
FOR009 PROGRAM NAME L9	IS AN EXISTING STABILITY SAVED DATA FILE. IT IS OPENED FROM TAPEWK AND IS UNFORMATTED.
FOR011 PROGRAM NAME L11	IS AN AUXILIARY OUTPUT FILE. IT IS OPENED FROM NOUT1 AND IS FORMATTED.
FOR015 PROGRAM NAME L15	IS A NEWLY CREATED STABILITY SAVED DATA FILE. IT IS OPENED FROM TAPEWK AND IS UNFORMATTED.

TDR 10/1/82