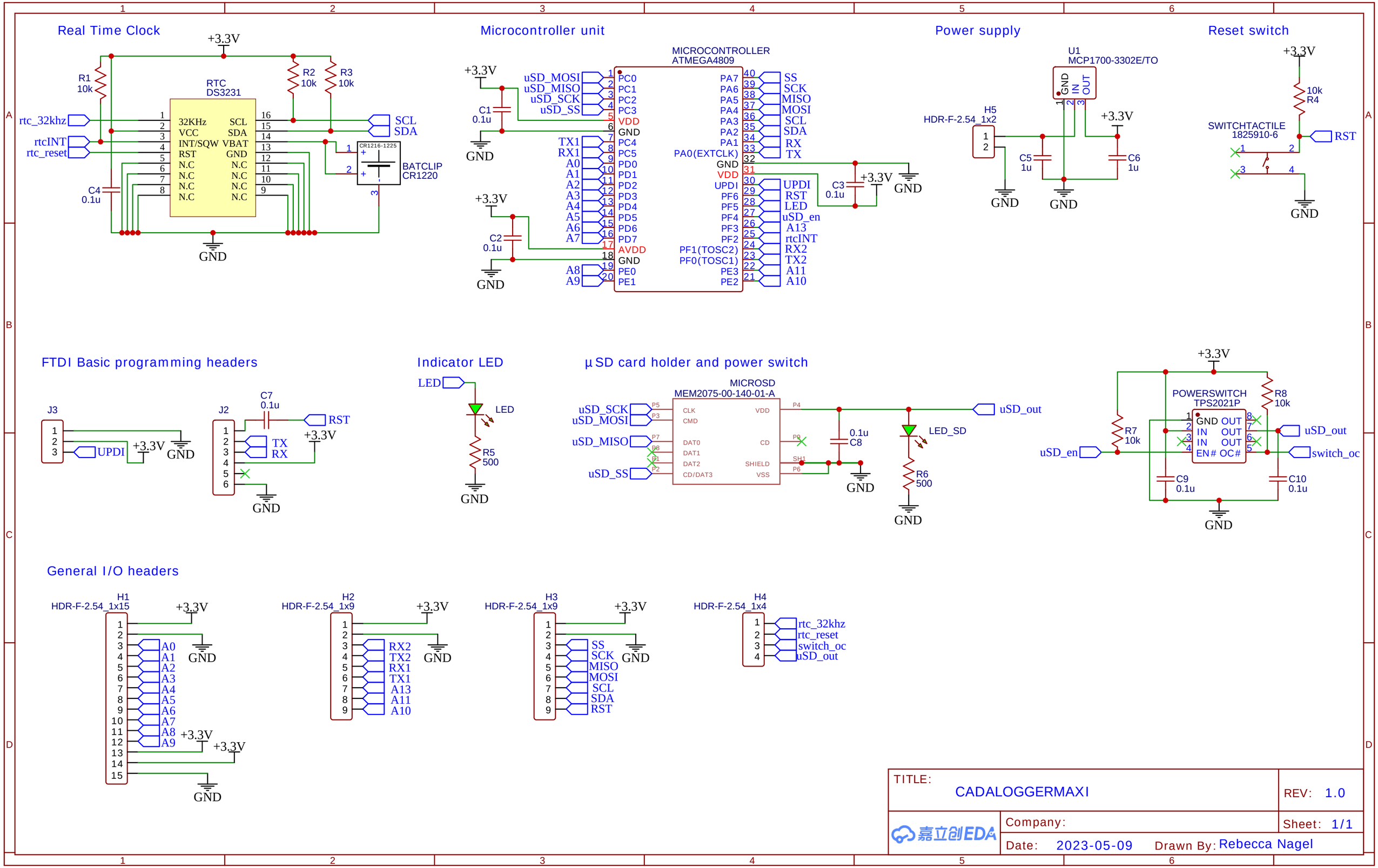


| | |
|---|---|
| TITLE: CADALOGGERMAXI | REV: 1.0 |
| Company: | Sheet: 1/1 |
| Date: 2023-05-09 Drawn By: Rebecca Nagel | |