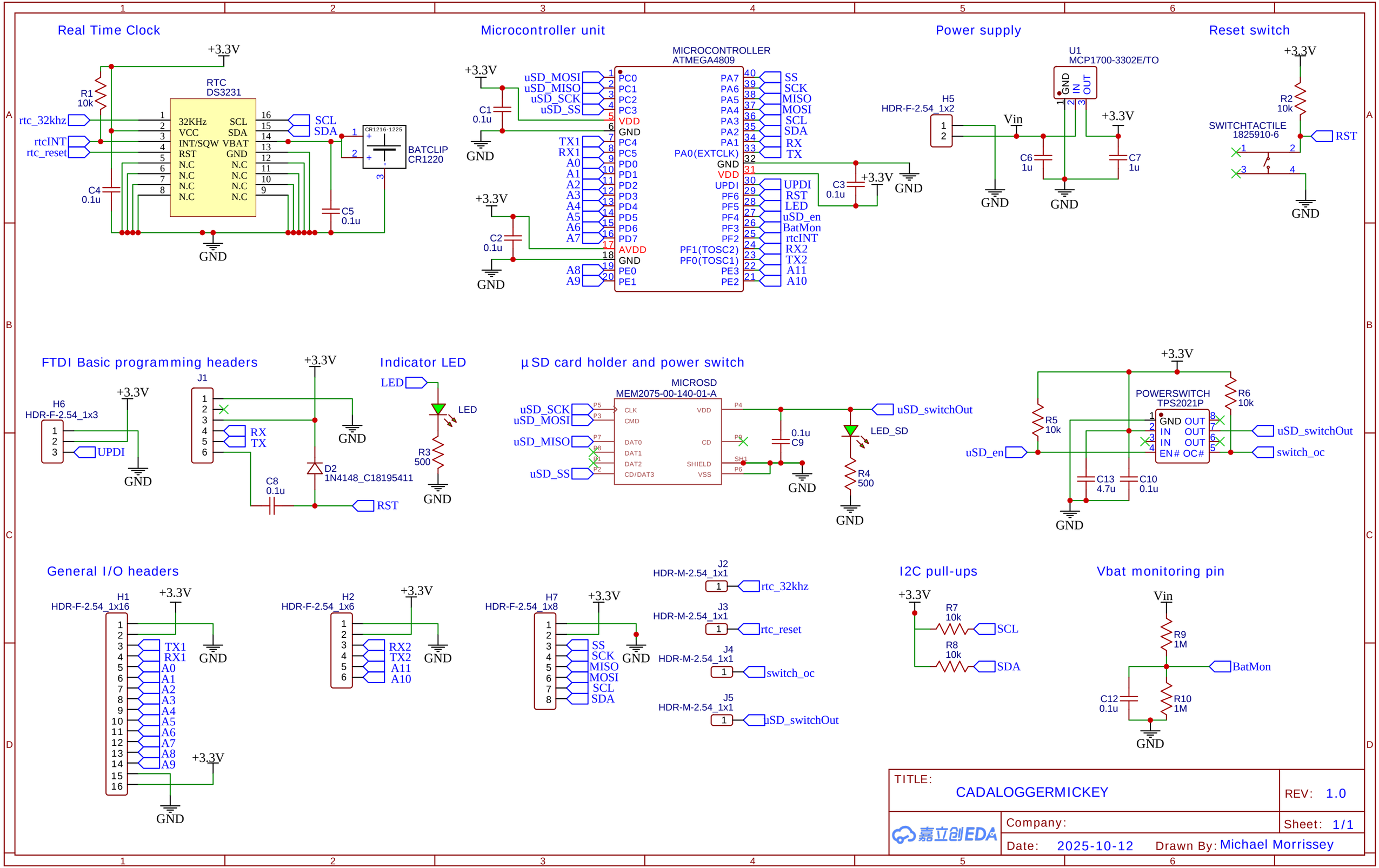

TITLE: CADALOGGERMICKEY	REV: 1.0
嘉立创EDA Company:	Sheet: 1/1
Date: 2025-10-12 Drawn By: Michael Morrissey	