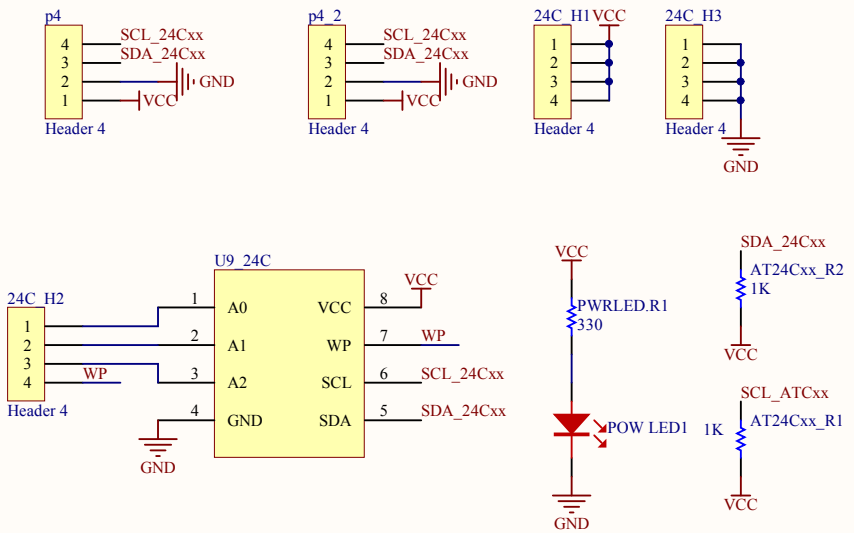

Title		
Size A4	Number	Revision
Date: 2011/12/27		Sheet of
File: E:\PCB\..\AT24_FM24.SchDoc		Drawn By: