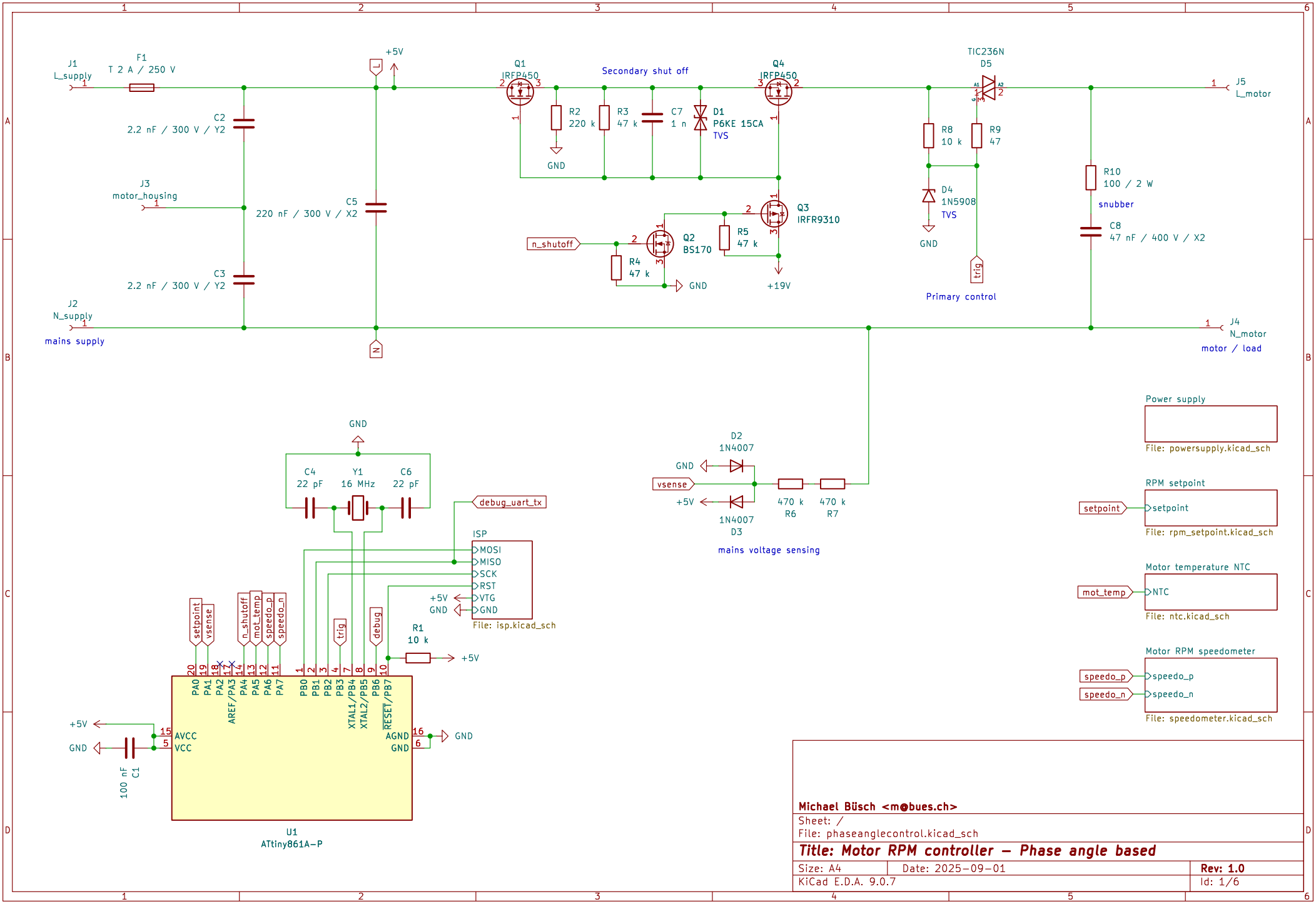

Michael Büsch <m@bues.ch>

Sheet: /

File: phaseanglecontrol.kicad_sch

Title: Motor RPM controller – Phase angle based

Size: A4	Date: 2025-09-01	**Rev: 1.0**
KiCad E.D.A. 9.0.7		Id: 1/6

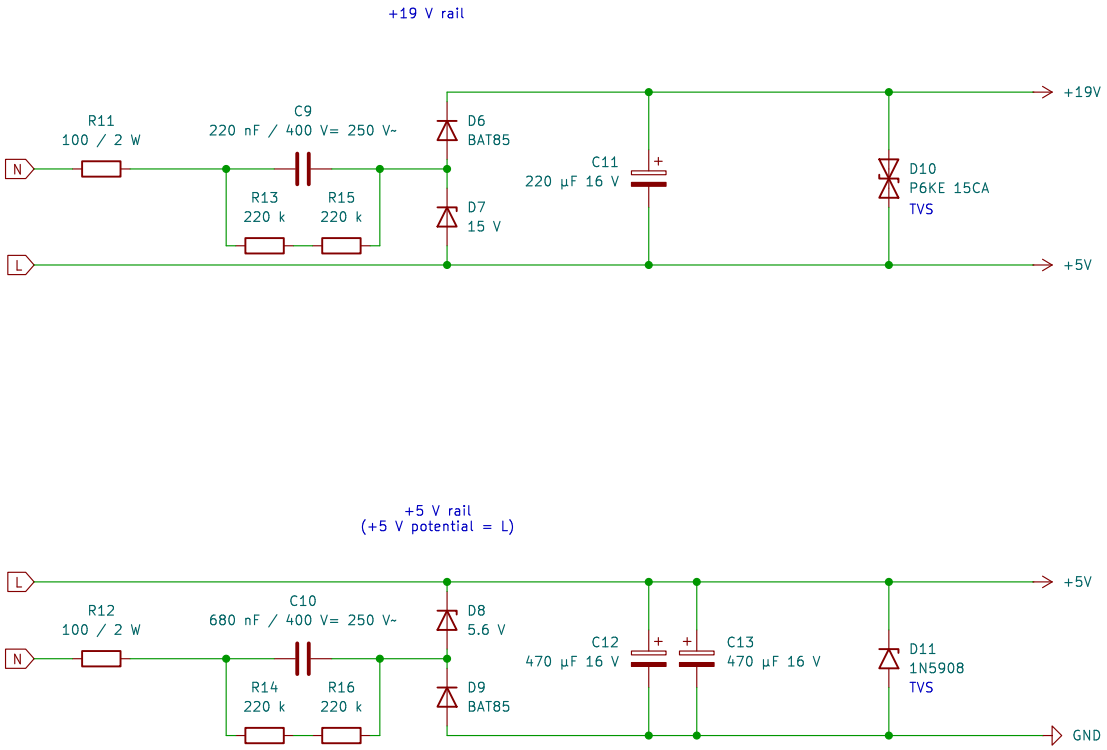

Michael Büsch <m@bues.ch>

Sheet: /Power supply/
File: powersupply.kicad_sch

Title: Motor RPM controller – Power supply

Size: A4	Date: 2025-09-01	**Rev: 1.0**
KiCad E.D.A. 9.0.7		Id: 2/6

Motor temperature NTC

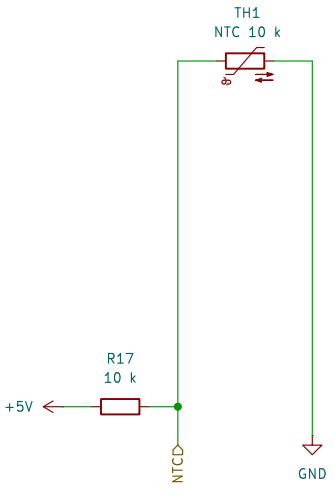

Michael Büsch <m@bues.ch>

Sheet: /Motor temperature NTC/
File: ntc.kicad_sch

Title: Motor RPM controller – Motor temperature

Size: A4	Date: 2025-09-01	**Rev: 1.0**
KiCad E.D.A. 9.0.7		Id: 4/6

WARNING WARNING WARNING

This circuit is **NOT** electrically isolated from mains L and N!
NEVER connect an ISP programmer/computer directly!

WARNING WARNING WARNING

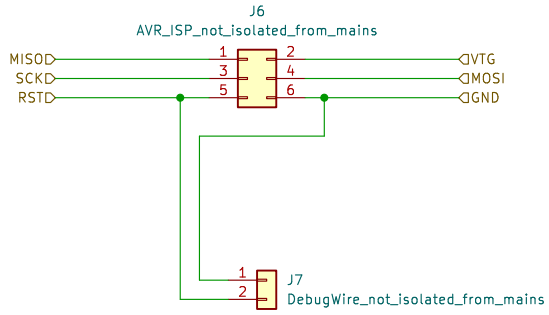

Michael Büsch <m@bues.ch>

Sheet: /ISP/
File: isp.kicad_sch

Title: Motor RPM controller – ISP – WARNING not isolated

Size: A4	Date: 2025-09-01	**Rev: 1.0**
KiCad E.D.A. 9.0.7		Id: 5/6

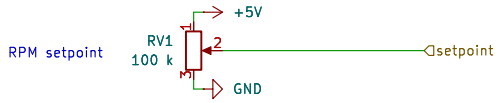

WARNING:
Pot spindles reaching touchable surfaces
must be non-metal
and must be capable of insulating 400 V.

Michael Büsch <m@bues.ch>

Sheet: /RPM setpoint/
File: rpm_setpoint.kicad_sch

Title: Motor RPM controller – Setpoint

Size: A4	Date: 2025-09-01	**Rev: 1.0**
KiCad E.D.A. 9.0.7		Id: 6/6

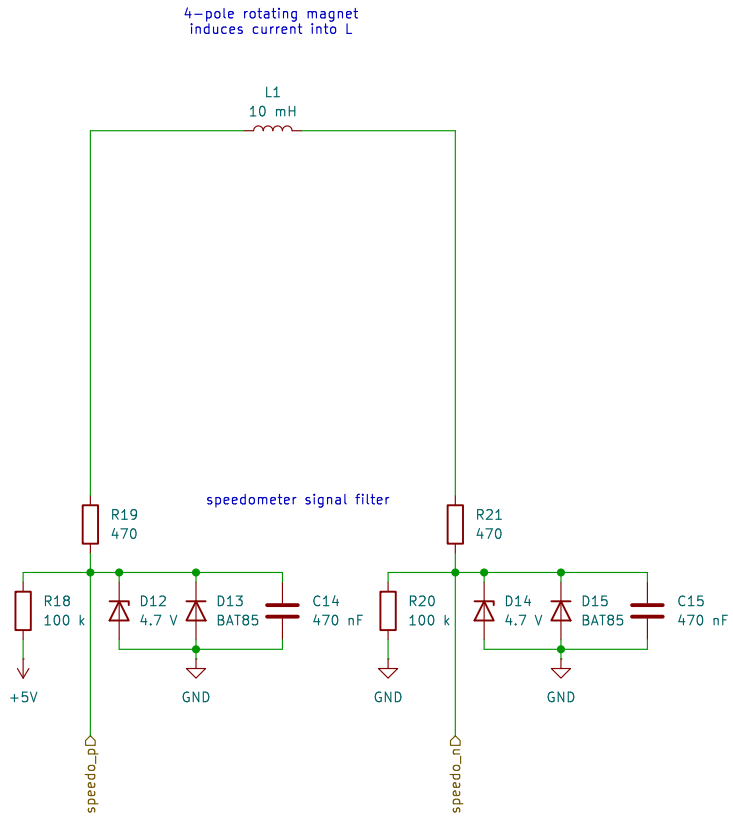

Michael Büsch <m@bues.ch>

Sheet: /Motor RPM speedometer/
File: speedometer.kicad_sch

Title: Motor RPM controller – Motor speedometer input

Size: A4	Date: 2025-09-01	**Rev: 1.0**
KiCad E.D.A. 9.0.7		Id: 7/6