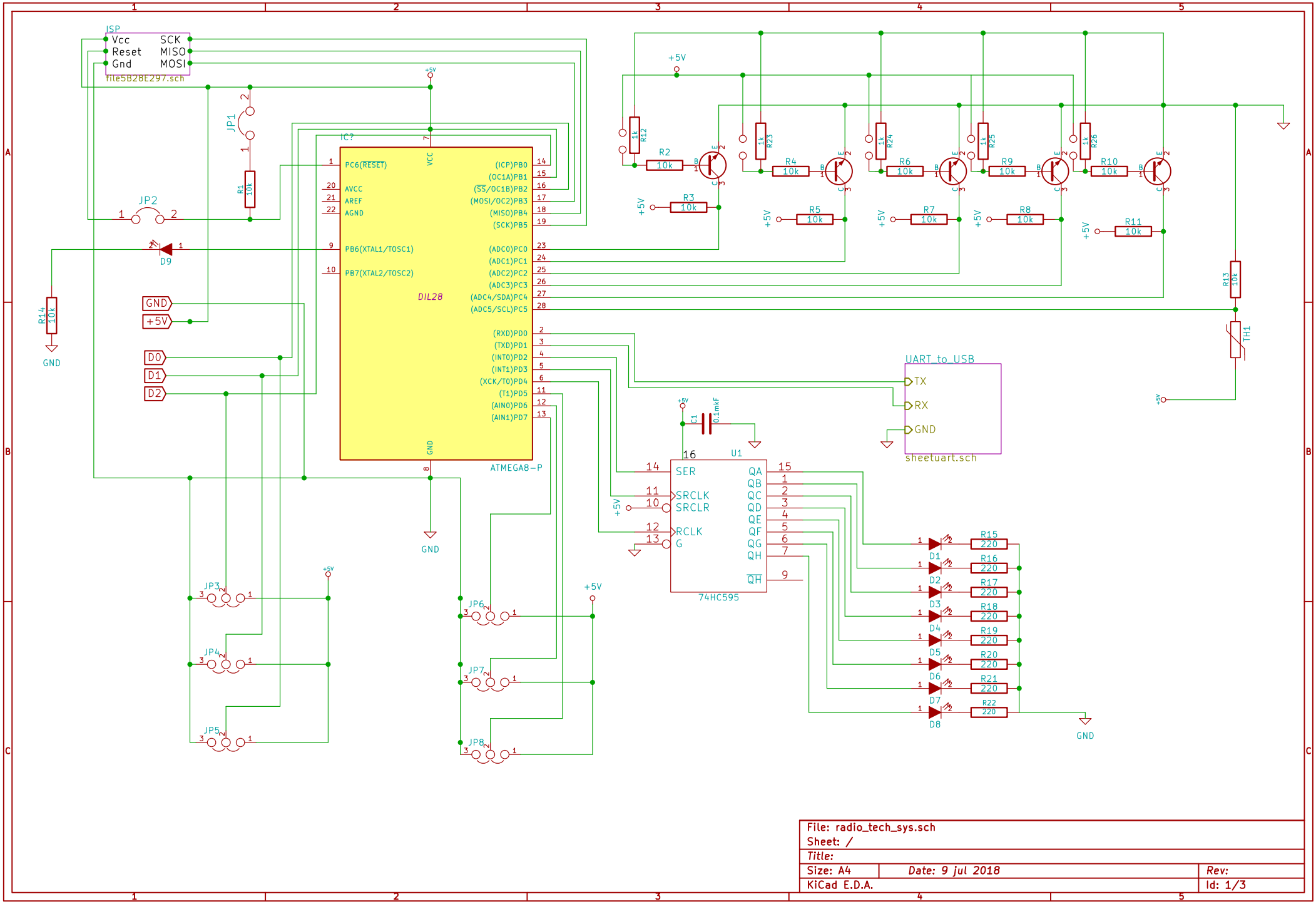

File: radio_tech_sys.sch		
Sheet: /		
Title:		
Size: A4	Date: 9 jul 2018	Rev:
KiCad E.D.A.		Id: 1/3