OPERATION MANUAL

Conveyor Scales
Model: WY10, WY15, WY20 and WY25 Conveyor Belt Scales

Rate Processor
Model: FC20 Rate Controller Version 6.XX firmware

Signal Conditioner
Model: SC100 Signal Conditioner (WY15 and WY25)
Model: SC200 Signal Conditioner (WY 10 and WY20)

FC20 RATE CONTROLLER

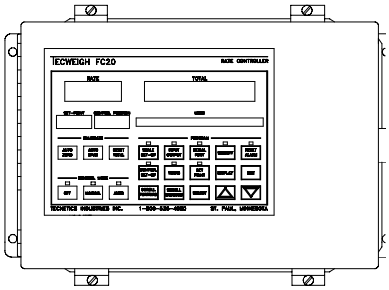

WY10

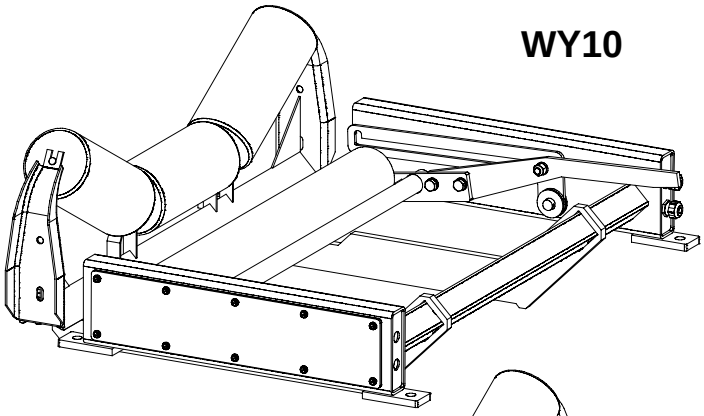

WY15

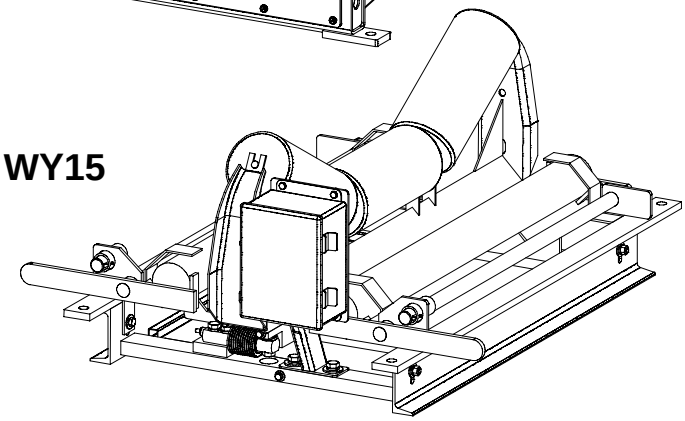

Tecnetics Industries Inc.
Makers of Tecweigh Products
1811 Buerkle Road
Saint Paul, MN 55110
Phone (651) 777-4780
Fax (651) 777-5582
www.tecweigh.com

TABLE OF CONTENTS

SECTION ONE—Introduction **3**
- 1.1 Electrical hazards 3
- 1.2 Equipment precautions 3
- 1.3 Contacting Tecnetics Industries Inc 3
- 1.4 Wording Conventions 3

SECTION TWO--Operation and Equipment Overview **5**
- 2.1 Basic operation 5
- 2.2 Pre feeder 5
- 2.3 Scale 5
- 2.4 Signal conditioner 5
- 2.5 FC20 Rate Controller 6

SECTION THREE--Scale Installation **9**
- 3.1 Scale installation 9
- 3.2 Idler preparation 10
- 3.3 Scale mounting 11
- 3.4 Speed sensor installation 12
- 3.5 FC20 Rate Controller installation 13

SECTION FOUR--System Wiring **15**
- 4.1 FC20 Rate Controller 15
- 4.2 Scale Wiring, FC20 and SC100 17
- 4.3 Scale Wiring, FC20 and SC200 18
- 4.4 Chart recorder & data logger (4-20) 19
- 4.5 Chart recorder & data logger (HFR) 20
- 4.6 Remote rate/total display 21
- 4.7 Remote tons counter 21

SECTION FIVE--User Interface **23**
- 5.1 Display 23
- 5.2 Menus and parameter entry 24
- 5.3 Calibration keys 25

SECTION SIX—Operation **27**
- 6.1 Basic Operation 27
- 6.2 Control Mode Keys 28
- 6.3 Set Point Key 29
- 6.4 Single Loop Control 30
- 6.5 Single Loop Control using Remote Set Point 31
- 6.6 Ratio Control using Remote Analog Set Point 32
- 6.7 Reset Alarm 33

SECTION SEVEN--Parameter Table **35**
- 7.1 Factory settings 35

SECTION SEVEN--Parameter Table (cont.)
7.2 Parameter definitions, General 35
7.3 Scale Set Up Menu Parameters 35
7.4 Control Set Up Menu Parameters 39
7.5 Input Output Menu Parameters 41
7.6 Tuning Menu Parameters 44
7.7 Serial Port Menu Parameters 45
7.8 Set Point Menu Parameters 45
7.9 Security Menu Parameters 46

SECTION EIGHT—Calibration 47
8.1 Power up the system 47
8.2 Calibrate Control Current Loop 48
8.3 Calibrate belt speed 49
8.4 Zero calibration (AUTO ZERO) 49
8.5 Span calibration (AUTO SPAN) 50
8.6 Pre/post test 50
8.7 Running the system 50

SECTION NINE Serial Communications 53
9.1 Overview 53
9.2 Automatic transmission 53
9.3 Manual transmission 54
9.4 Rate control commands 54
9.5 Remote calibration 55

SECTION TEN—Troubleshooting 57
10.1 Status messages 57
10.2 Electrical troubleshooting 59
10.3 Operation troubleshooting 62
10.4 Auxiliary equipment troubleshooting 63
10.5 Load Cell testing/replacement, WY15 & WY25 Only 64
10.6 LVDT testing/replacement, WY10 & WY20 Only 65

SECTION ELEVEN--Tech Information 67
11.1 WY15 Scale Carriage Dimensions 67
11.2 WY25 Scale Carriage Dimensions 68
11.3 WY10 Scale Carriage Dimensions 69
11.4 WY10 HD Scale Carriage Dimensions 70
11.5 WY20 Scale Carriage Dimensions 71
11.6 Warranty and service policy 72
11.7 Factory set up sheet and parameter table 73

Last Revised 2/22/2
P/N 21011100

Section One

Introduction

1.1 Electrical Hazards

The electrical installation should be done by a qualified electrician who is trained in proper wiring procedures. The equipment described in this manual requires a supply voltage of 100 - 240 VAC which represents a degree of hazard to the operating personnel. When installing or servicing the unit, disconnect the power from the FC20 Rate Controller and ALL auxiliary equipment connected to it.

1.2 Equipment Precautions

When handling printed circuit boards (PCBs), always use a commercially available grounding wrist strap to prevent electrostatic discharge which can cause failure of electronic components. Store unused PCBs in electrostatic protection bags made for that purpose. Use caution at all times when transporting, rigging, or hoisting scale carriages. Mishandling can cause equipment damage and/or injury to personnel. Remove calibration weights during transport to prevent damage to the scale and also to prevent the weights from falling. Avoid electrical welding on or near the scale carriage and electrical enclosures. Electrical current passing through the PCBs will destroy them. If welding near the scale is required, place the ground clamp as close to the welding area as possible.

1.3 Contacting Tecnetics Industries Inc.

There are two important hand printed numbers, a serial number and model number, on the PCBs that completely identify both the ownership history and exact model. The unique serial number identifies who owns the unit and what date it was shipped. The model number indicates what design revision your particular product is on for troubleshooting purposes.

Examples of model numbers:

MP210-01-03

A 210 series MP (Main Processor) on its first hardware revision (-01) and third firmware revision (-03).

SC100-02-01

A 100 series SC (Signal Conditioner) on its second hardware revision (-02) and first firmware revision (-01).

When contacting Tecweigh for service, please have both the serial and model number available.

1.4 Wording Conventions

This manual uses wording conventions in relation to the two most important parts of the processor, key pushes and the parameter table.

First Letter Capitalized	Parameters will always appear like this and will also be spelled as they appear in the processors parameter table. If the parameter needed to be truncated in the processor it will appear truncated in the manual.
ALL CAPITALIZED	All letters are capitalized when referring to the keys and other features on the face of the processor such as AUTO ZERO, AUTO SPAN or the MODE window.

Section Two

Operation Overview

2.1 Basic Operation

A Tecweigh conveyor scale assembly typically consists of the WYxx scale, the scale mounted SC100 or SC200 signal conditioner (SC), and the FC20 Rate Controller (FC20). The primary function of the scale is to continuously measure the material weight on the belt at any particular instant in time. The scale transmits this weight signal (and also the belt speed) to the SC which conditions these signals for use by the FC20. This conditioning also allows the FC20 to be mounted remotely from the scale when required. Once configured, the FC20 has the ability to convert the signals from the SC to a material flow rate and then compare it to a user entered rate set point. The FC20 also has a 4-20 ma control loop output (Control Positon) to a client supplied pre-feeder that controls the material feed rate. Adjustments are continuously made to the output control signal based upon rate to setpoint comparisons. When the measured rate and entered setpoint are equal, the FC20 will hold its output. Whenever any upsets in material feed are sensed (a change in rate), the FC20 will increase or decrease the 4-20 ma output control signal, as required, until the rate and setpoint are once again equal.

IMPORTANT: To achieve an ideal environment for the FC20 it is critical to provide an even flow of material over the scale. A constantly varying load on the scale will cause the FC20 to continuously make wild corrections to the control signal output. If this environment cannot be achieved then special attention to sizing and selecting the drive components may be necessary as well as tuning of the FC20's parameters to suite the environment.

The main components of a typical scale system are the pre-feeder, weighing device, signal conditioner and the FC20.

2.2 Pre-Feeder

Pre-Feeders are either controlled (such as variable speed conveyors, rotary vanes, screw feeders, vibratory feeders, etc.) or uncontrolled (such as gravity fed, manual control of flow gates, etc.). With a controlled Pre-Feeder the Control Position (4 to 20 ma loop signal) output from the FC20 can be used to control the material feed. With an uncontrolled Pre-Feeder the conveyor with the Weighing Device must be variable speed to control the rate.

2.3 Conveyor Scale (WY10/WY15/WY20/WY25)

This typically consists of the scale carriage, load cells (or LVDTs) for sensing weight and a sensor that senses the belt speed. Most Tecweigh equipment is also equipped with self storing calibration weight(s) and mechanism for easy operation. See scale installation chapter for additional information.

2.4 Signal Conditioner (SC100/SC200)

The belt speed and material weight signals are sent to the Signal Conditioner (SC) which is usually mounted on the scale carriage. The Signal Conditioner has two functions. First, it collects and conditions the belt speed and material weight data. Second, it determines if there are any possible electrical problems at the scale such as faulty weight sensors or low power. The

speed, weight and scale status are then sent to the FC20 via the industry standard RS485 communication protocol.

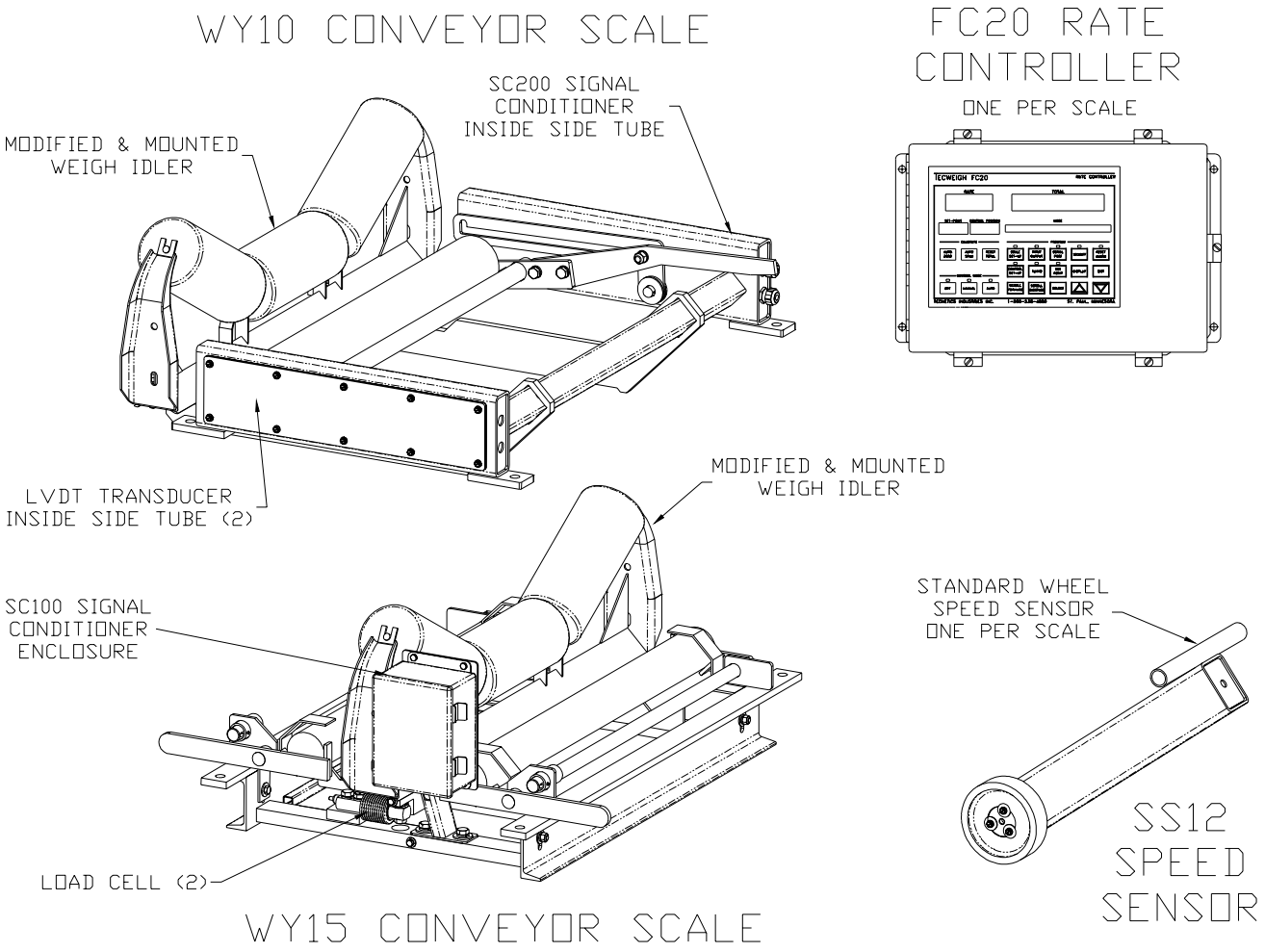

2.5 FC20 Rate Controller

The FC20 Rate Controller (FC20) is the brains of the scale system. Settings are stored in the FC20 such as belt length, calibration weight, unit of measure and any desired options. At the very basic level, it receives belt speed and material weight data from the Signal Conditioner and shows the resulting rate on the display. The FC20 keeps a continuously updated total based on that rate. While displaying the rate and total, the FC20 interprets status information from the signal conditioner and displays status messages when appropriate. When in AUTO mode it is also continuously measuring the difference between the Rate and user input Set Point and responding accordingly by varying the Control Position.

Various analog, relay and serial inputs and outputs (I/O) allow control and monitoring of the FC20's primary functions. Depending on the I/O used, the user can remotely link to the FC20 using a programmable logic controller (PLC) or other plant control devices. Furthermore, up to 16 FC20’s can be daisy chained on one RS485 serial bus for full plant automation.

See the visual representation on the following page for a quick reference to the available I/O functions.

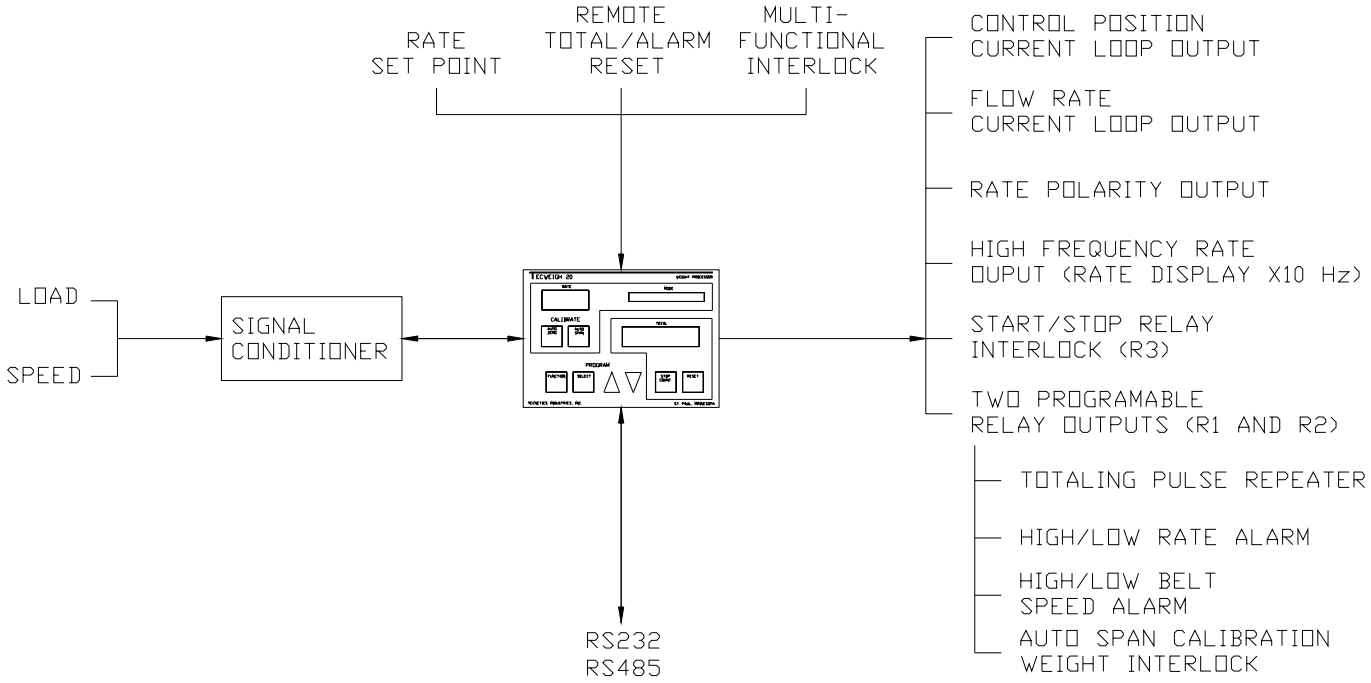
RATE
SET POINT
REMOTE
TOTAL/ALARM
RESET
MULTI-
FUNCTIONAL
INTERLOCK
CONTROL POSITION
CURRENT LOOP OUTPUT
FLOW RATE
CURRENT LOOP OUTPUT
RATE POLARITY OUTPUT
HIGH FREQUENCY RATE
OUPUT (RATE DISPLAY X10 Hz)
START/STOP RELAY
INTERLOCK (R3)
TWO PROGRAMABLE
RELAY OUTPUTS (R1 AND R2)
TOTALING PULSE REPEATER
HIGH/LOW RATE ALARM
HIGH/LOW BELT
SPEED ALARM
AUTO SPAN CALIBRATION
WEIGHT INTERLOCK
LOAD
SPEED
SIGNAL
CONDITIONER
TECWEIGH 20
WEIGH PROCESSOR
RATE
TOTAL
CALIBRATE
PROGRAM
FUNCTION
SELECT
RESET
TECWEIGH PRODUCTS, INC.
ST. PAUL, MINNESOTA
RS232
RS485

Section Three

Scale Installation

3.1 Scale Installation

Proper scale installation is critical for high accuracy and repeatability. A properly mounted scale should be located on a rigid, horizontal conveyor. If the conveyor is at an incline, assure it is not so steep that material rolls back on itself causing it to be weighed twice. The belt and idlers should move smoothly and the scale should be mounted in an area free of temperature, wind and vibration extremes. Shimming and aligning the idlers surrounding the scale so that the weigh area is slightly raised from the other idlers as indicated below is extremely critical.

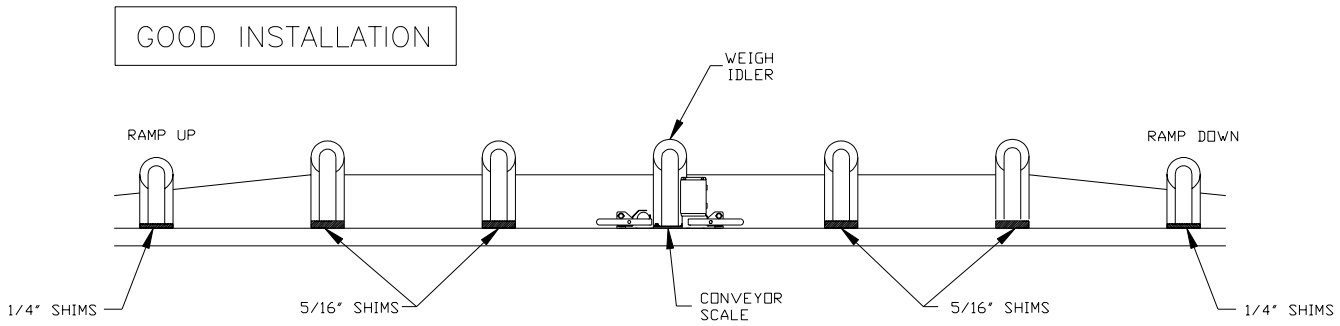

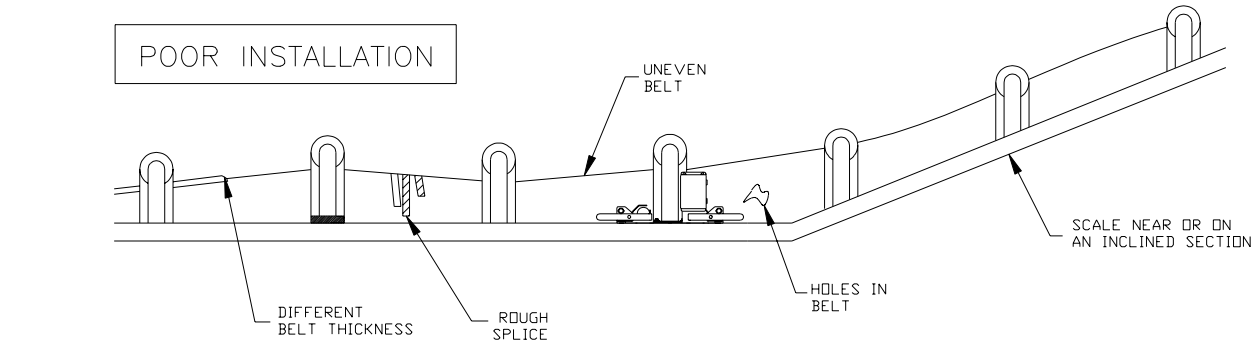

<u>Avoid the following!</u>

- Badly worn belts and splices
- Joined belts with different thickness
- Poor belt training or alignment
- Wind, temperature or vibration extremes
- Material build-up on belt, idlers or calibration weights
- Loosely mounted unstable conveyor
- Idlers with steep trough angles
- High belt tension
- Steep conveyors allowing material to roll back
- Belt skirting or other interference near scale

3.2 Idler Preparation

After finding a suitable location for the scale, reduce tension in the belt. Raise the belt so it is supported at least one foot above the idler where the scale will be located and also one foot above the three idlers before and after the scale. Note, if you are installing a dual-idler scale (model WY10 or WY25), follow the same instructions as for the single-idler scale (model WY10 and WY15) and just repeat the instructions for both idlers. Short conveyors may only have two idlers on one or both sides, but this is not recommended. ***DO NOT WELD ON OR NEAR THE SCALE!!!***

1) Mark the center of each roller on the scale idler, three idlers before the scale, and three after.
2) Remove the idler where the scale will be located--this will be used as the weigh idler.
3) Remove the weigh idler's factory mounting pads.
4) Center the weigh idler on the unpainted scale mounting pads and mark the location on the idler.
5) Remove the idler and the unpainted mounting pads from the scale.
6) Weld the unpainted mounting pads to the idler at the previously marked locations.
7) Weld a reinforcement gusset in each corner of the weigh idler.
8) Paint the weigh idler if desired.

mark centers

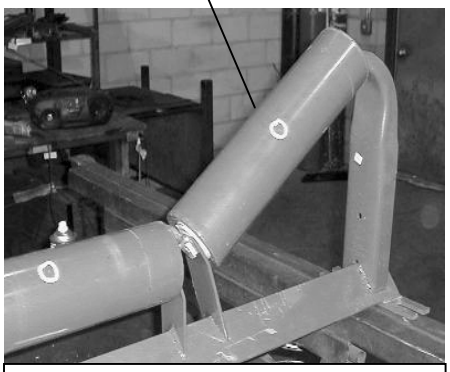

Mark Roller Centers

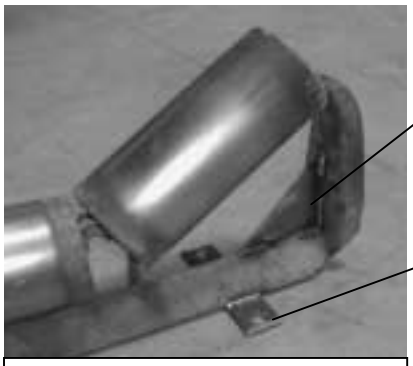

weld gusset on each side

new mounting pad each side

Modified Weigh Idler

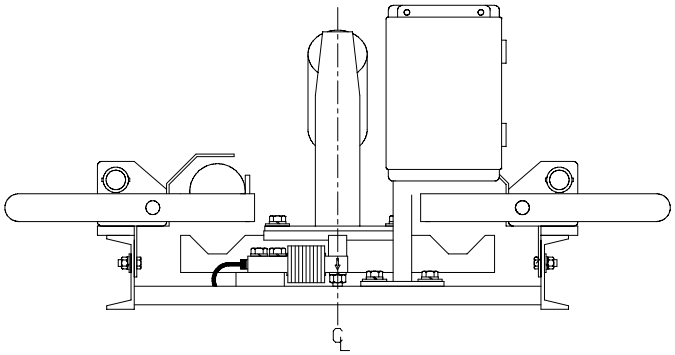

WY15

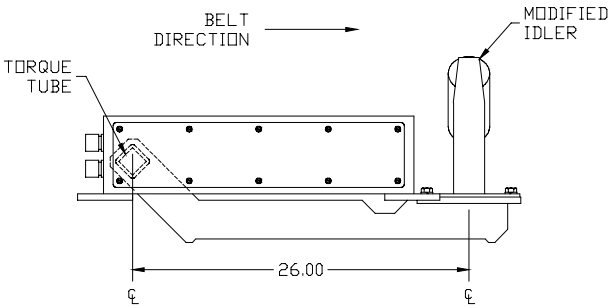

WY10

With the weigh idler modification complete, mount the idler on the scale using the four bolts that are provided. Center the idler on the scale as indicated on the previous page.

3.3 Scale Mounting

Place the scale carriage with the modified idler on the conveyor stringers. Center and align the scale between the stringers and mark the location of the mounting holes. Alternatively you can use the dimension drawings in Section 11 for marking hole locations, but using the scale as a template is preferred. Slide the scale out of the way and drill the four mounting holes. Place the scale over the holes, but do not tighten the bolts yet.

You will now align the weigh idler with the three idlers on either side of the scale using the fish line and shims provided. Follow these instructions and refer to the diagram below.

1) Loosen the three idlers before and after the scale.
2) Shim the +3 and -3 idlers up 3/8 of an inch, center on stringer, and re-tighten the bolts.
3) Stretch three fish lines across the idlers centered on the +/- 3 roller center marks.
4) Use elastic cords to hold the fish line in place on each end.
5) Lower the calibration weight on the scale so the idler is at its normal running height.
6) Shim the scale feet leaving a 1/16 inch gap between weigh idler and fish line.
7) Use thin shims under the scale if necessary so it does not rock or pivot while laying flat.
8) Tighten the scale carriage bolts.
9) Shim and tighten +/- 1 and +/- 2 idlers with 1/16 inch gap between the fish line and the roller center.

The idler alignment is very important! Before proceeding, verify that the fish line is exactly over the center marks on the rollers and that there is exactly a 1/16 inch gap between all the rollers and fish line. Also verify that the idlers are exactly square with the stringers.

Remove the 1/8 inch (leave 1/4 inch) of shim from the +/- 3 idlers and tighten them down. Re-tension and align the belt so that it tracks in the center of the idlers. Make sure all of the rollers are turning freely and are securely bolted down.

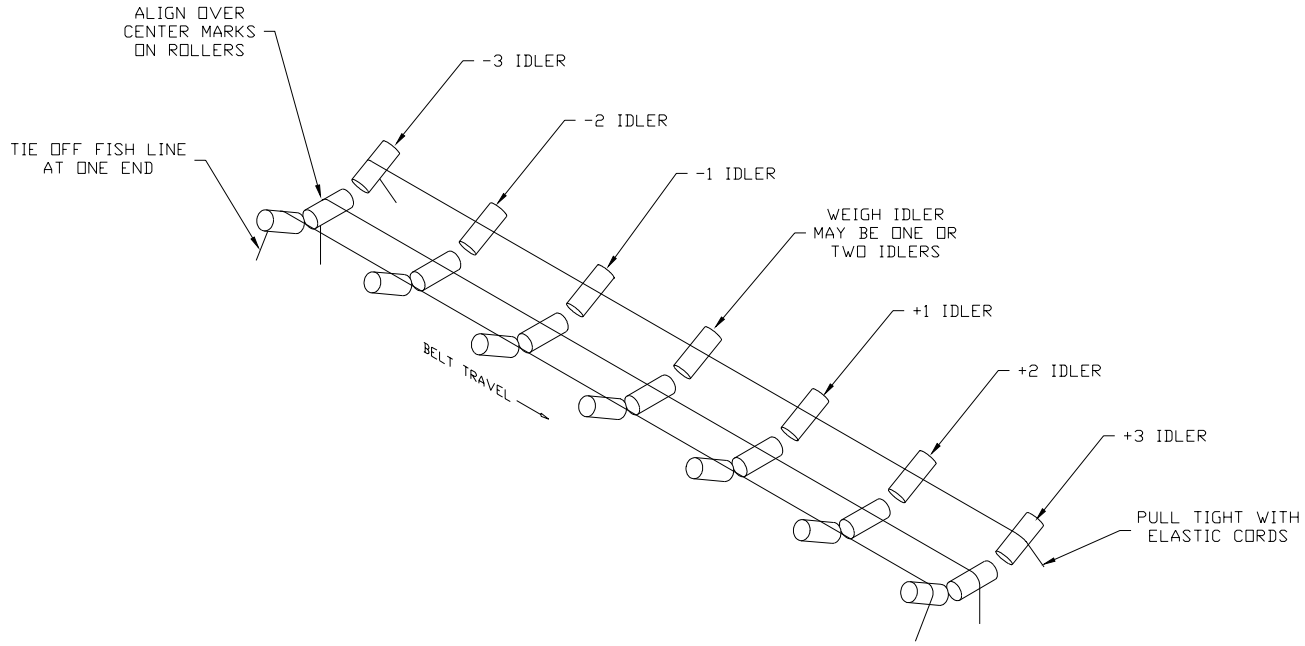

IMPORTANT!!! Remove the two safety latches on both ends of the idler mounting bar. These safety latches prevent overloading of the load cells during shipment. If using a portable conveyor, use the safety latches during transportation. See the diagram on page 55.

3.4 Speed Sensor Installation

For standard SS12 speed sensor:

Mount the speed sensor assembly so that it is aligned exactly with the belt. If it is not straight, it may bounce and wear down the wheel or belt. Position the wheel so that it is at least 6 to 12 inches from a return idler.

1) Weld two of the supplied pieces of pipe to the conveyor stringers.
2) Slide the spacers (other pieces of pipe) and speed sensor assembly onto the pivot arm.
3) Tack weld the spacers so the speed sensor is loosely constrained but can still swing freely.

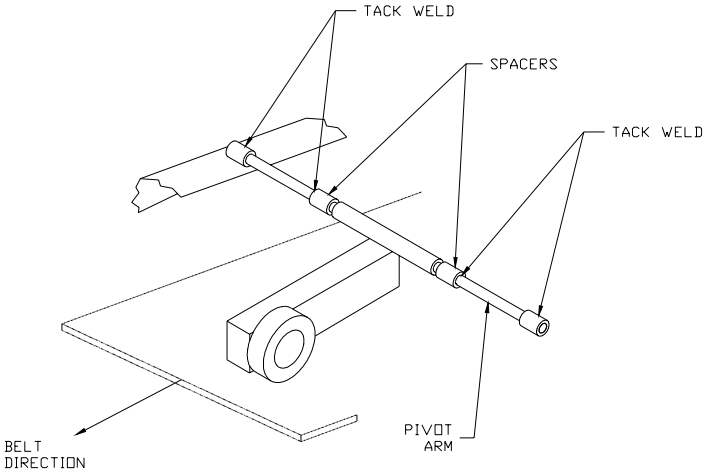

For heavy duty speed sensors:

Since most brands and styles of conveyors are constructed differently it's not possible to give specific installation instructions for the heavy duty speed sensor. You will need to drill four holes for the bearing bolt holes. You will also need to form and weld one bracket to clip the spring on and another bracket to hold the speed sensor arm horizontal.

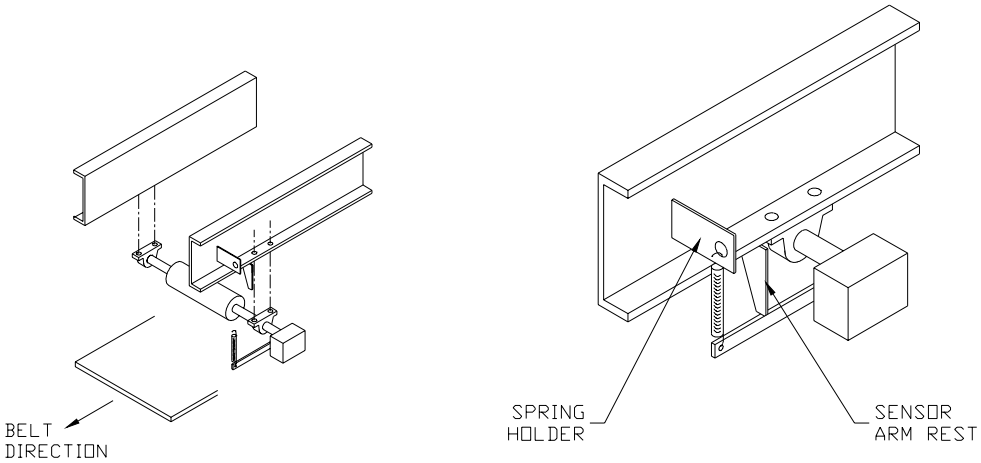

3.5 FC20 Rate Controller Installation

Before installation review the cautions on page 4 of this manual. Mount the FC20 in a reasonably clean area away from severe heat and isolated from vibration. Avoid areas of bright sunlight since the lighted displays may become difficult to read. Where outdoor installation is necessary, the FC20 should be mounted under a “roof” or “dog house” to provide rain and snow protection as well as shade. Be sure to allow room for the enclosure door to swing out. The FC20 can be located up to 4000 feet from the scale. Take note, however, that calibration will require visiting the scale carriage to manually drop the calibration weight during an AUTO SPAN.

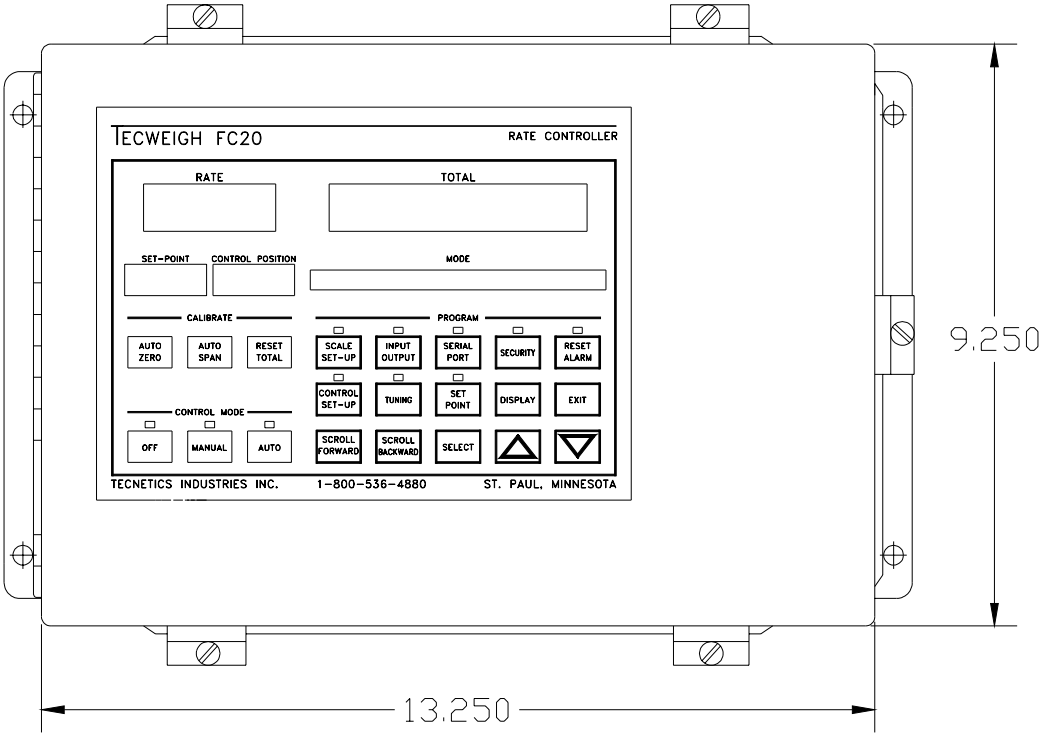

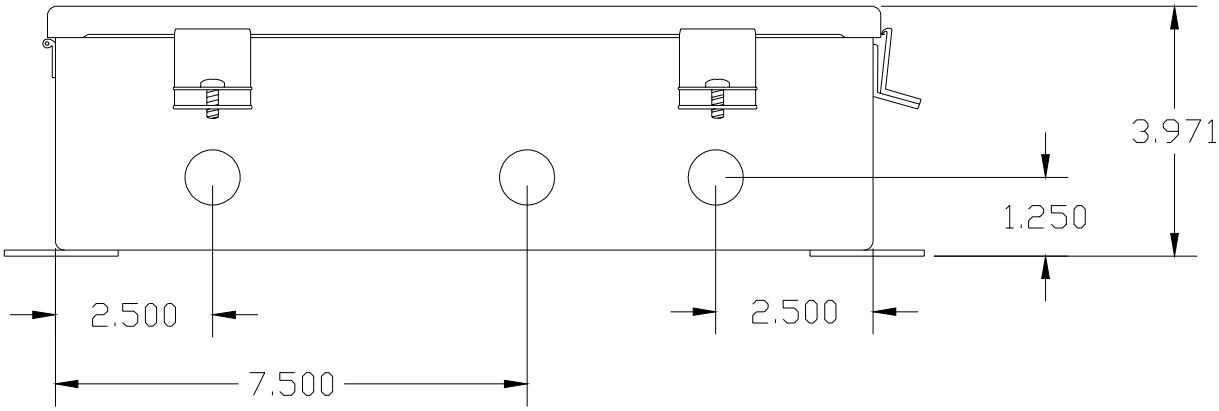

Section Four

System Wiring

4.1 FC20 Rate Controller

Basic scale wiring and the most common configurations of auxiliary equipment are covered in this section. The outputs can, of course, be used with devices not described here--consult the wiring diagrams provided with those specific devices. Section 7.5 will cover the settings required to enable the output features. Follow these precautions during installation:

- Only apply input power after assuring all wiring is correct
- Electrical power source must be of Utility quality and specification
- Only connect shield wires to one device, usually the FC20
- Insulate shield wires to prevent shorts
- Use water tight compression fittings on cables entering the enclosure
- DO NOT connect any wires to the unused terminals
- Pay particular attention to proper grounding
- Max current draw from HFR output is 60 mA

Scale connections

Communication between the scale carriage and the FC20 is accomplished using the industry standard RS485 communications protocol. Terminal 10 is signal common, terminal 29 is approximately 24 VDC power and terminals 20 and 22 are A and B channels of the RS485 signal. Wiring connections should only be made through the bottom of the enclosure using waterproof fittings. Use 18 gauge two twisted pair shielded cable from the scale carriage to the FC20 Controller. Belden 1063A cable is recommended. See the applicable field wiring diagrams in Section 4 to wire optional accessories. To prevent possible shorts to terminals or to the printed circuit boards keep the wiring neat and insulate all shields. See section 4.2 for typical field wiring diagrams or, if your equipment has been custom built by Tecweigh you will find an “as built” wiring diagram in the back of this manual.

Relays

Two programmable relays provide dry contacts for a remote totalizer, high/low rate alarm, high/low speed alarm or calibration weight lifter interlock. A third relay is used for remote start/stop of the conveying or pre-feeding device. The relays are SPDT and are rated at 250 VA. When a relay is used for a totalizer pulse relay, limit the frequency of operation to 6 pulses per second for reliable operation. See Section 7.5 for relay configuration parameters.

Rate current loops

The FC20 Controller provides either a 0-20 mA or 4-20 mA current loop proportional to the rate for driving chart recorders, data loggers, and other devices. The 4 - 20mA current loop output is the preferred output in most industrial automation and control systems. See Section 7.5 for configuration. Use a 2 wire (one twisted pair) shielded cable, Beldon #8760 is preferred.

Warning: **THE CURRENT LOOP OUTPUT IS ACTIVE!**

ENSURE IT IS CONNECTED TO A PASSIVE INPUT OR DAMAGE WILL RESULT.

The current loop output at the PCB is active (supplies 24VDC at AO+ terminals) and non-isolated. In many system applications, signal isolation to eliminate ground loops and reduce common noise interference is **essential**. The FC20 is supplied with two externally powered isolators to provide a large range of self protection and instrument protection.

4 – 20mA communications combine half circuits in two separate devices to make an interconnecting circuit. It is important to ensure that there is only one current source and that neither side of the circuit overloads the other. The interconnecting cabling can also introduce problems into either device especially on long runs or when close to industrial electrical equipment and associated control devices and their wiring. Proper shield grounding is essential.

HFR & HFR polarity

The High Frequency Rate (HFR) output provides a square wave signal with a frequency equal to 10 times the calculated rate and a pulse width equal to half of one cycle. It can be used to drive remote rate displays and other plant devices capable of using this type of signal. There is also a digital output providing 5 VDC when the rate is positive and 0 VDC when the rate is negative. HFR max current draw is 10 mA. Minimum output frequency is 10Hz. See Section 7.5 for HFR configuration parameters.

Serial ports

One RS232 and one RS422 (***half duplex***) or RS485 half duplex serial ports are available for sending and receiving data and commands to the FC20 Controller. See Section 4.2 for wiring diagram and Section 9 for complete operating instructions.

Remote total/alarm reset

When the remote reset terminal is connected to terminal 10, either the total will reset to zero or an existing alarm condition will be reset. See Section 4.2 for wiring diagram. See section 7.5 for configuration parameters.

Auto enable/Run enable/External alarm input

If programmed to be an Auto Enable, leaving this input open will disable the FC20 from making correction to the feed rate. This will basically put the FC20 in a Manual condition. When programmed as a Run Enable leaving this input open will put the FC20 in an Off condition, shutting down material feed altogether. This assumes an FC20 relay is being used as the Run interlock for the conveyor. In the External Alarm setting, when this contact is closed momentarily an alarm condition will exist until it is RESET.

Remote DC input

The FC20 has the ability to receive either a 4-20 ma or 1-5 vdc remote setpoint input signal. (The input signal can also be 0-20 ma or 0-5 vdc). The input can also be used for master/slaving with a Tecweigh WP20 weigh controller 4-20 ma rate output. When a 4-20 ma input signal is used, jumper J12 on the MP210 printed circuit board must be installed. When a 1-5 vdc signal is used, the jumper must be removed. Jumper J12 is located just to the right of the lower right black relay (one of the four black cubes). The unit comes with the jumper installed (4-20 ma setup).

4.2 Scale Wiring, FC20 and SC100 (WY15 & WY25)

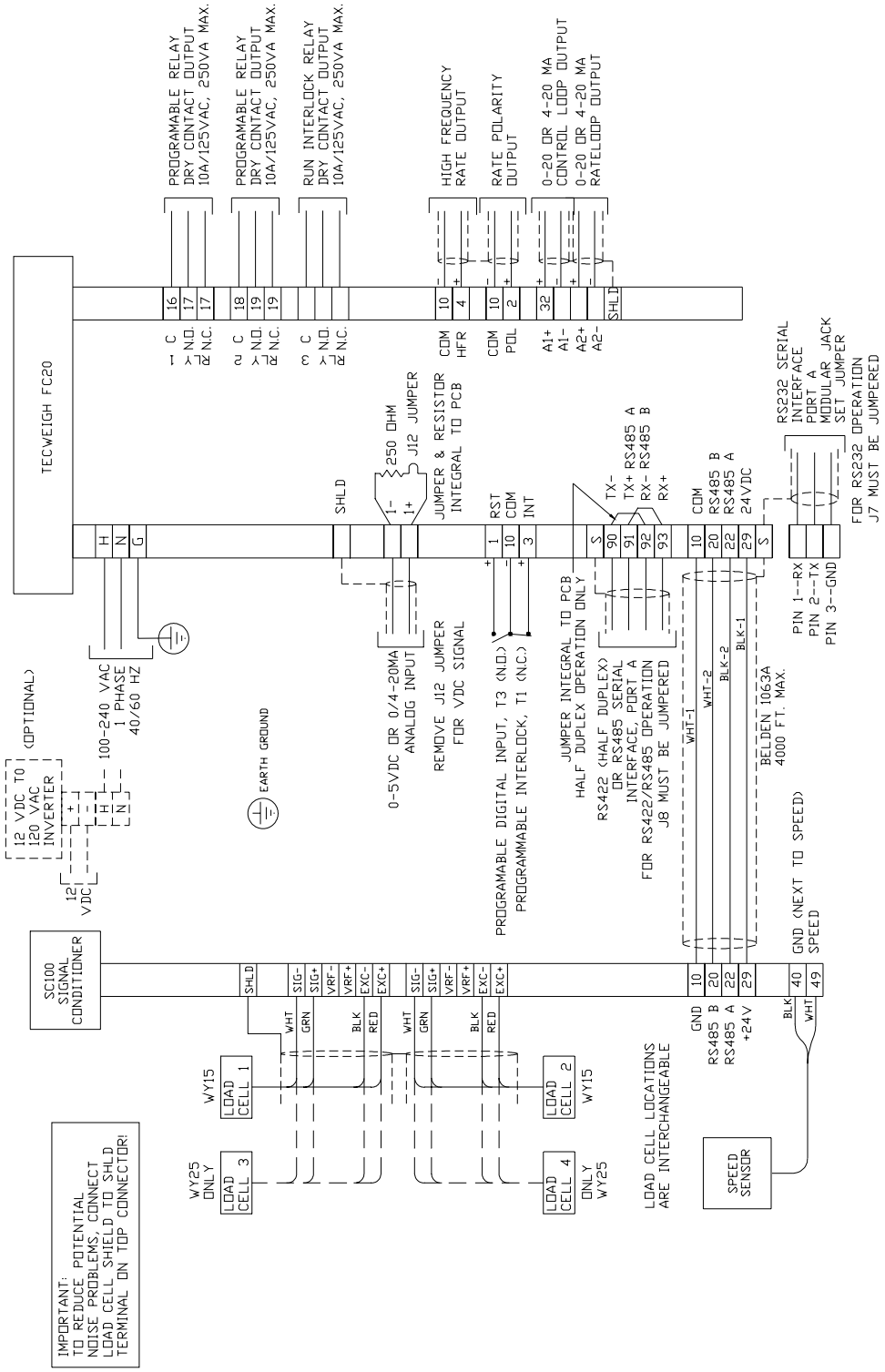

4.3 Scale Wiring, FC20 and SC200 (WY10 & WY20)

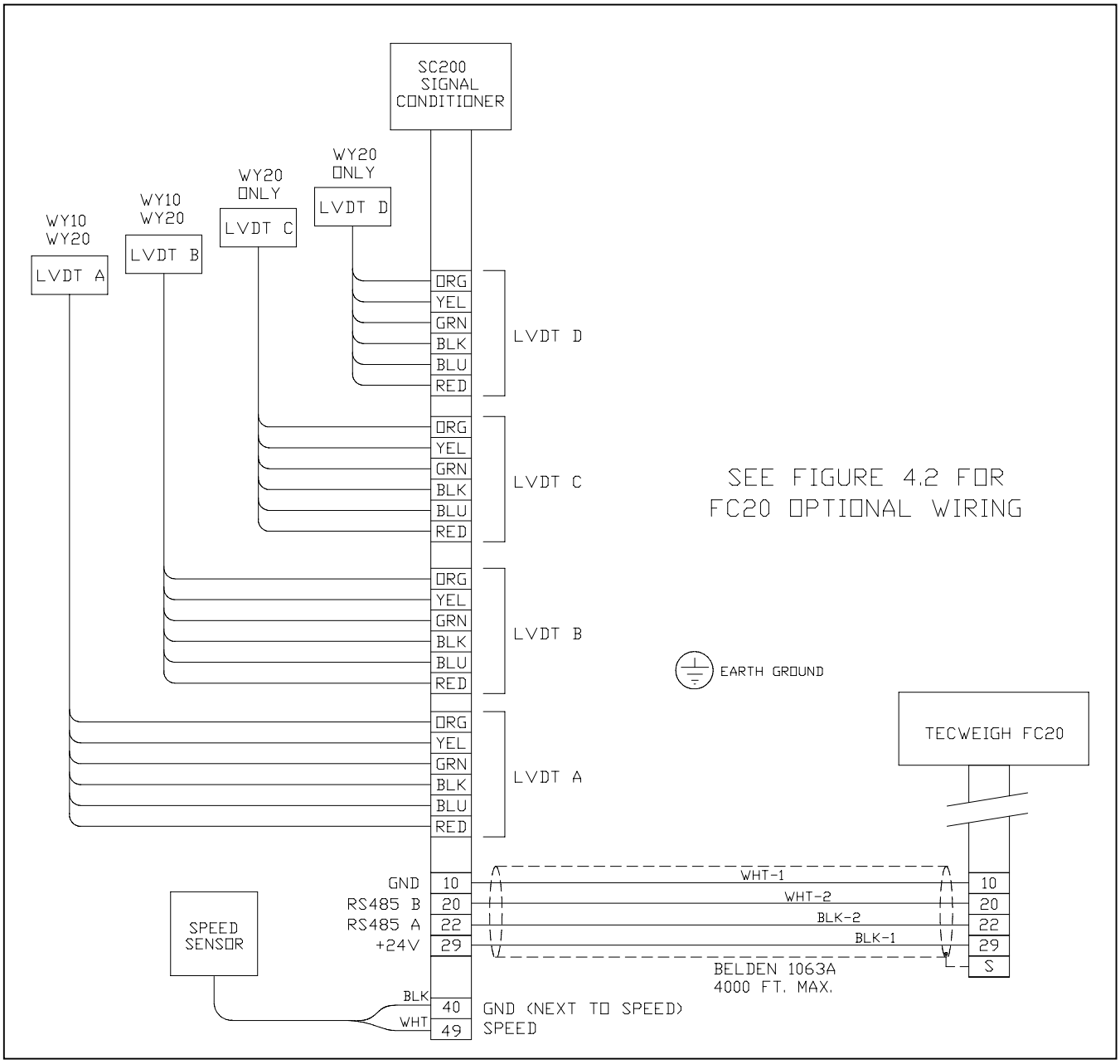

4.4 Chart Recorder & Data Logger (4-20)

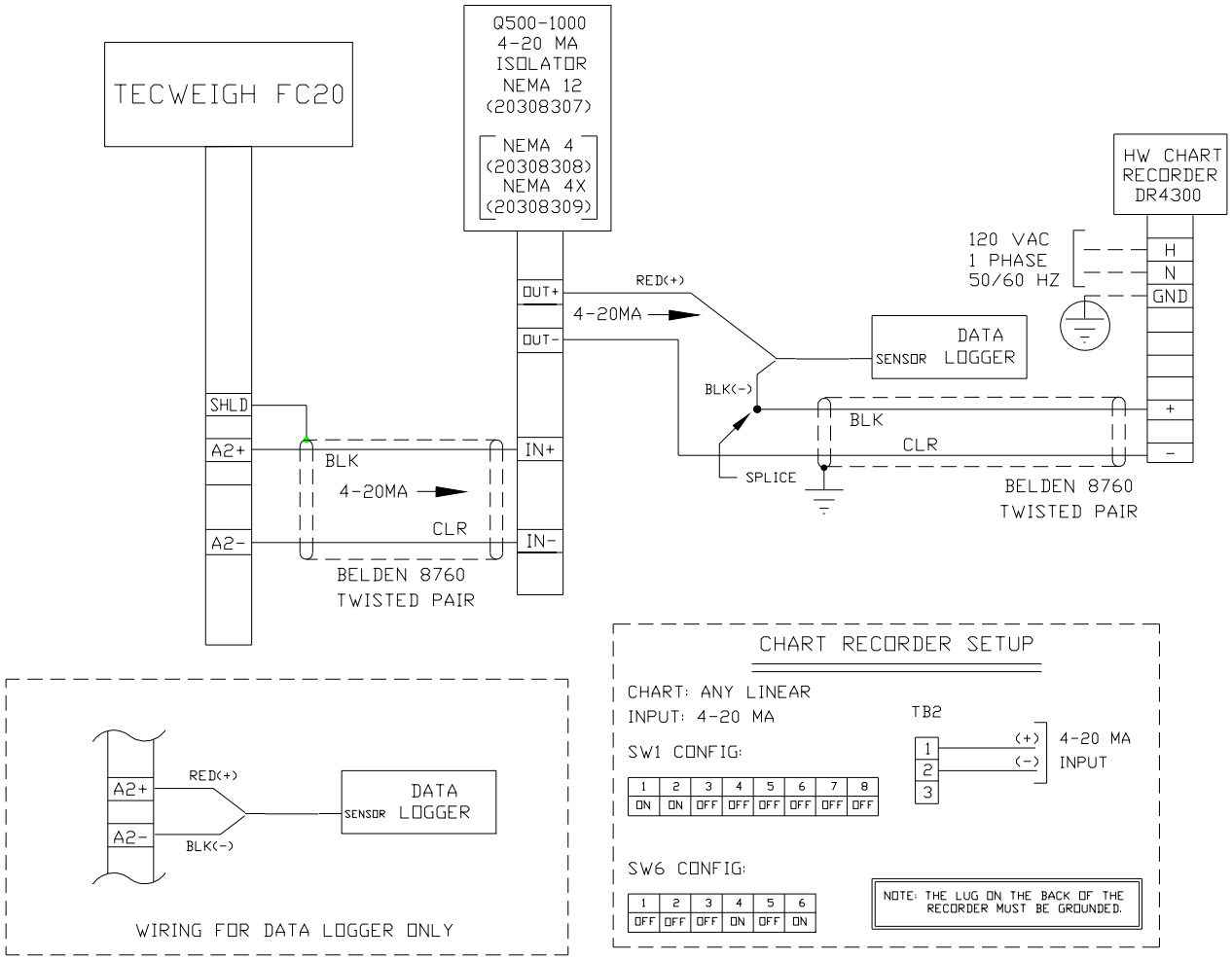

FIELD CONNECTIONS FOR A DATA LOGGER &/OR CHART RECORDER
UTILIZING THE 4-20 MA RATE OUTPUT FROM THE WP20,
WHEN THE RECORDING DEVICES USE A 4-20 MA INPUT.

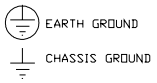

4.5 Chart Recorder & Data Logger (HFR)

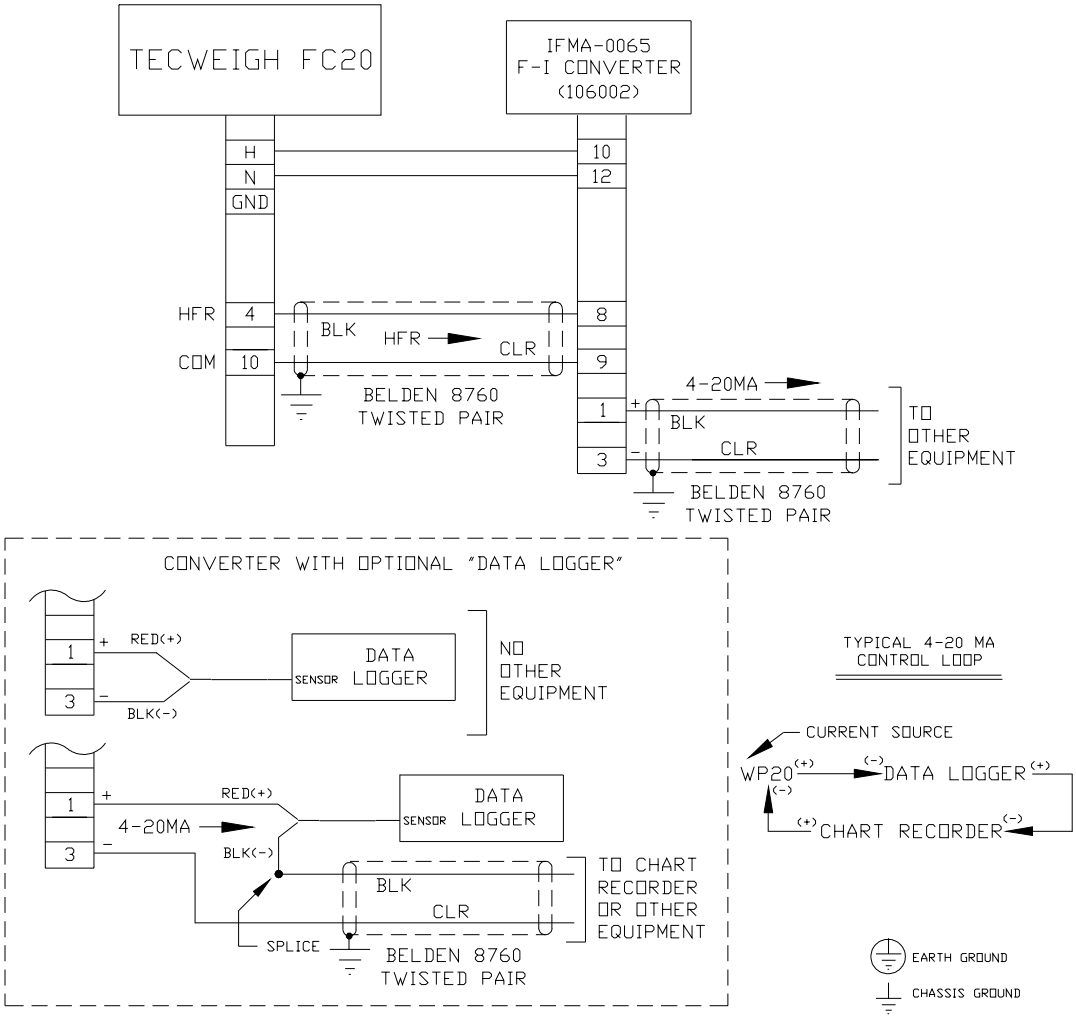

FIELD CONNECTIONS FOR A DATA LOGGER &/OR CHART RECORDER UTILIZING THE HIGH FREQUENCY RATE OUTPUT FROM THE WP20, WHEN THE RECORDING DEVICES USE A 4-20 MA INPUT.

4.6 Remote Rate/Total Display

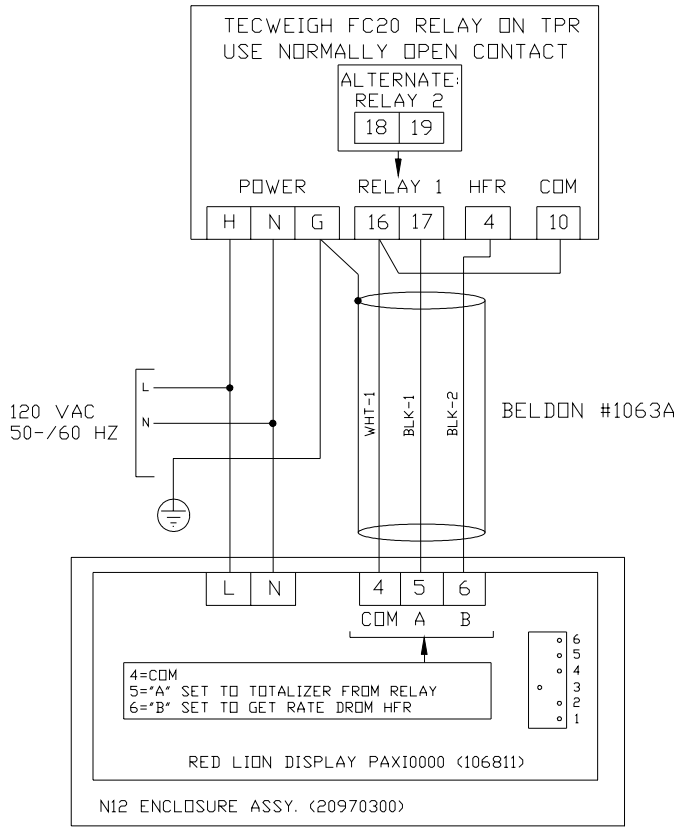

CHANNEL A: TOTALIZER:

1.) DIP SWITCH 3 TO LOW.
2.) MODE #6.1. A INPUT VALUES AS NEEDED.

TYPICAL SETUP:

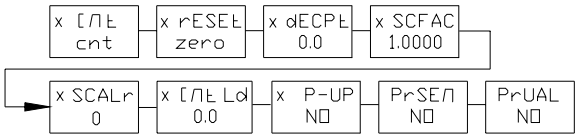

CHANNEL B: RATE:

1.) MODEL #6.4. B INPUT VALUES AS NEEDED.

TYPICAL SETUP:

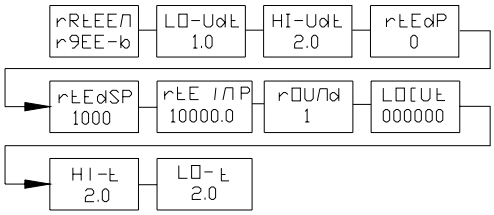

EARTH GROUND

CHASSIS GROUND

4.7 Remote Tons Counter

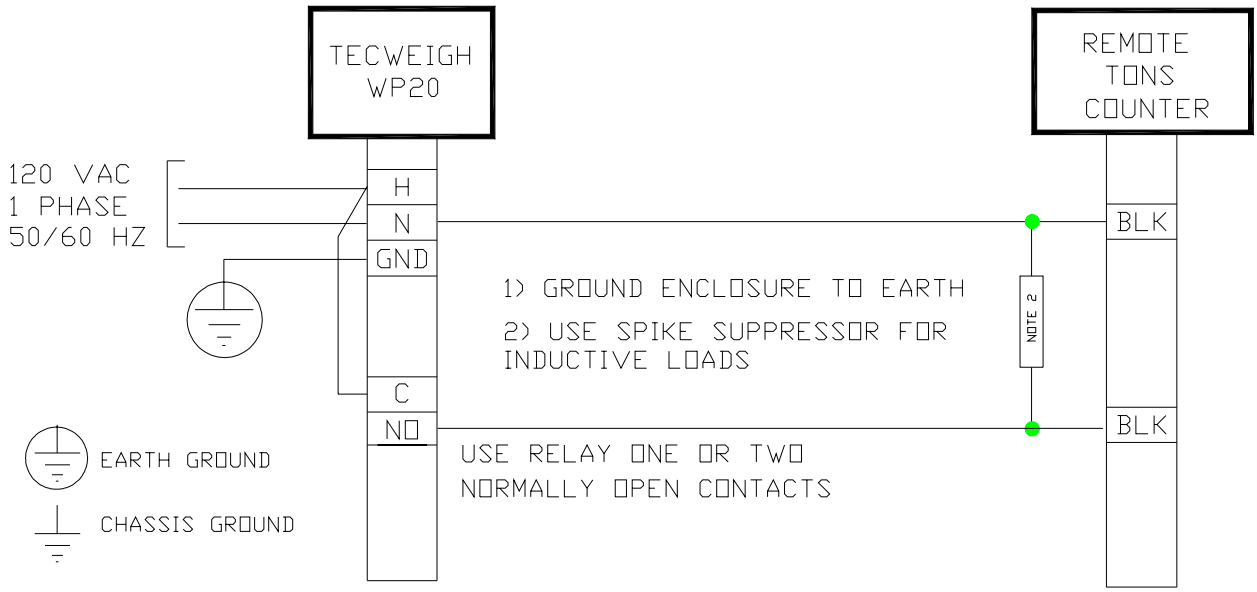

Section Five

User Interface

5.1 Display

At this point, your scale should be installed and the FC20 mounted and wired. Apply power to the unit. The display windows should light up with information. Since the unit has not yet been set up, disregard any error messages or incorrect values on the display.

RATE window - Displays the rate of material flow on the conveyor.

MODE window - There are three different modes that the FC20 can run in. Only certain information is displayed in each mode and only certain functions are available.

1) Run Mode--displays the rate units of measure, the belt speed and scale status messages.
2) Program Mode--displays the list of settings such as belt speed, relay options, etc.
3) Simulations Mode--displays all Program Mode settings while running at a simulated rate.

TOTAL window - Displays the total weight of material that has passed over the scale since the last time the total was reset to zero.

SET-POINT window – Displays the Set Point the FC20 controller will maintain by changing the Control Position output, (AI1+/-). This display will match the decimal point setting for the Rate Display.

CONTROL POSITION window – The Control Position output is displayed here in percent of full scale to tenths of a percent. It represents the range of output scaled for analog output one (AI1+/-).

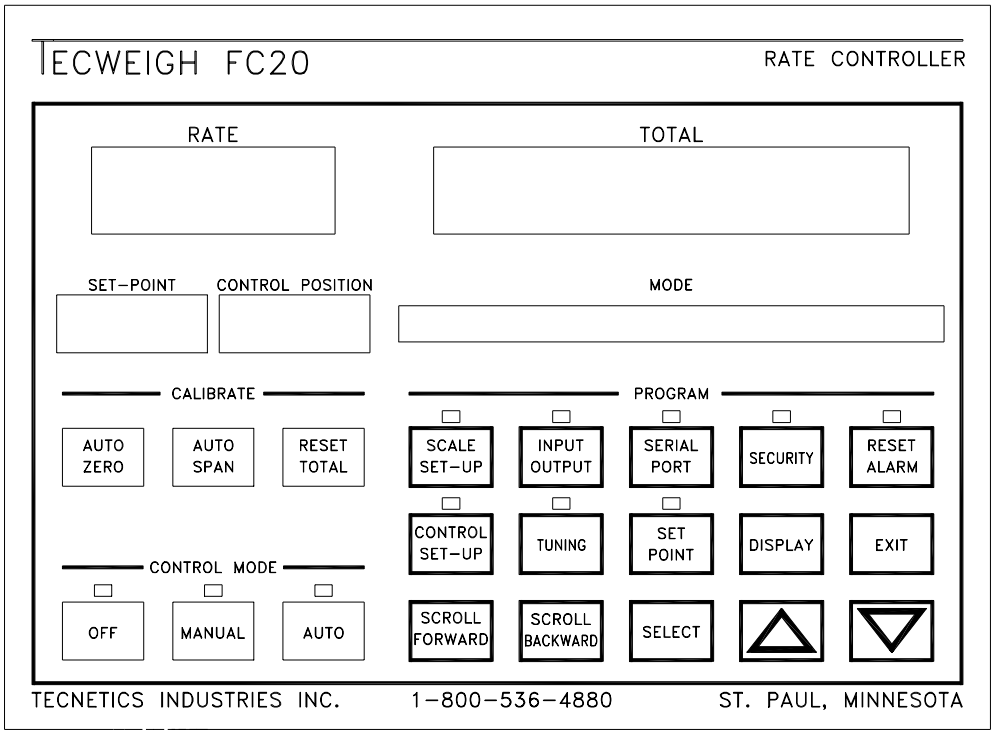

5.2 Button Definitions, Parameter Entry

Parameters, Main Menu Keys

The FC20 is configured by accessing 7 main menus. See lower right figure. Each menu consists of parameters, and each parameter is viewable, most of them being editable. Menus are opened by pressing the desired menu key on the front panel. An LED will light indicating to the user that the menu is open and ready to be accessed.

Menus - Accessed by seven lighted program buttons. See main menu keys below right.

Parameters - Accessed by the SCROLL FORWARD and SCROLL BACKWARD keys.

Parameter values - Modified by the SELECT and up/down ARROW keys.

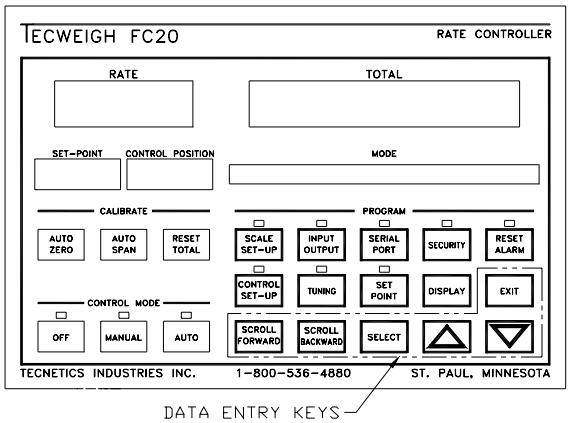

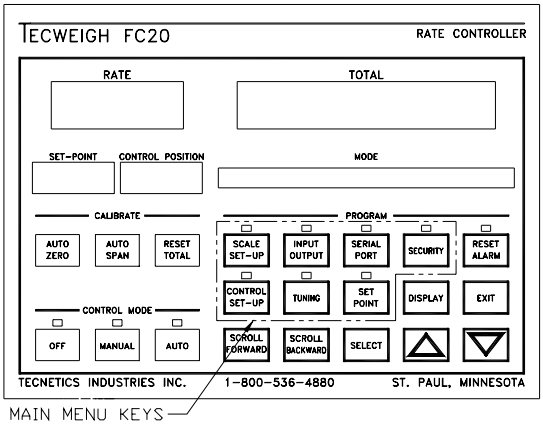

Data Entry Keys

SCROLL FORWARD and SCROLL BACKWARD – Once a menu key has been pressed, to locate a menu item simply press the SCROLL FORWARD or SCROLL BACKWARD keys until the menu item appears in the mode display. All menu items indicate their current values. Note that not all of the menu items will appear, they may be skipped over because their functions are not applicable due to the settings of other menu items.

SELECT - After the desired menu item is located by the scroll buttons, use the SELECT key to highlight the menu items changeable parameter. This enables the parameter to be modified. The changeable parameter can be a word or a number. If it is a number, pushing the SELECT key moves horizontally across the digits. The enabled digit flashes for recognition. Always press the select key to stop the parameter or digit from blinking before advancing to the next parameter or exiting the Menu.

Increment and Decrement ARROWS - Once the desired parameter has been located (SCROLL), and enabled (SELECT), use the Increasing (UP ARROW) or Decreasing (DOWN ARROW) keys to modify the number. If the parameter is a word this will scan through the list of alternatives for that specific Parameter. Changes to menu items are stored automatically after pushing the SELECT key again to stop the flashing of the parameter.

EXIT - The EXIT key is used to exit the program mode, and return to normal operation. It is not necessary to press the EXIT key to change from one menu to another. Exiting the programe

mode accepts any changed values. Menus may be accessed from one to another without losing their internal positions.

5.3 Calibration Keys

AUTO ZERO - Initially calibrates the scale to read zero when there is no material running on the belt. An AUTO ZERO calibration may also need to be done after setup to compensate for material build-up, change in belt tension or other effects that cause a non-zero rate when the belt is empty. See Section 8.4 for additional information.

AUTO SPAN - Calibrates the scale to a known weight using calibration weights or a calibration chain. See Section 8.5 for additional information.

RESET TOTAL - Resets the TOTAL to zero. Note, once reset, the previous value cannot be recovered. This button can also be used to cancel an Auto Zero or Auto Span calibration.

Section Six

Operation

6.1 Basic Operation

The Tecweigh FC20 Rate Controller (FC20) was designed to operate in conjunction with Tecweigh Conveyor Scales or Weigh Belt Feeders. It provides direct readings of SET-POINT, CONTROL POSTITION, RATE, and TOTAL, and will automatically maintain a feed rate based upon local or remote user designated SET POINT. The FC20 offers flexibility in many rate control applications. A 4-20ma control signal (AI1+/-) and/or relay outputs may be used to control the feed rate process. Either belt speed or pre-feed may be adjusted to maintain Set Point using the control position output.

As material is feed over the conveyor scale, the FC20 compares the RATE against the SET POINT. The control position output is then adjusted up or down in response to the difference between RATE and SET POINT. Large errors yield large corrections in output and small errors yield small corrections in output. Once Set Point is achieved, the output will hold its position until errors are again sensed.

Systems that include long conveyors, surge bins, and other conditions which make it difficult for the FC20 to maintain rate control will require special attention to Parameter Settings. For instance, the FC20 uses a unique control delay function (Feed to Scale) which accounts for the distance between the material feed point and the actual Scale Weigh Bridge. This feature allows the process to stabilize after corrections have been made, preventing the FC20 from oscillating above and below Set Point. By using the “Feed to Scale” parameter and by monitoring the conveyor belt speed, the FC20 will automatically know when to start taking a new Rate Sample. The amount of time that the sample lasts is controlled by using the “Sample Time” Parameter. After the Sample Time expires a change is made to the control position output based on the average rate during the Sample Time. Thus, the actual control delay consists of two functions, first the “Feed to Scale” distance must elapse, then the “Sample Time” duration before a change is made. Because of this automatic control delay, variable speed conveyors, or pre-feed devices on constant speed conveyors, may be used to control the feed rate process.

Interface outputs offer the ability to monitor production by access to printers, PC’s and other remote processors. RS232 and RS422 (half duplex) or RS485 Serial Interface Ports offer complete control from remote computers. Set Point and Rate Control commands may be received, aiding plant automation.

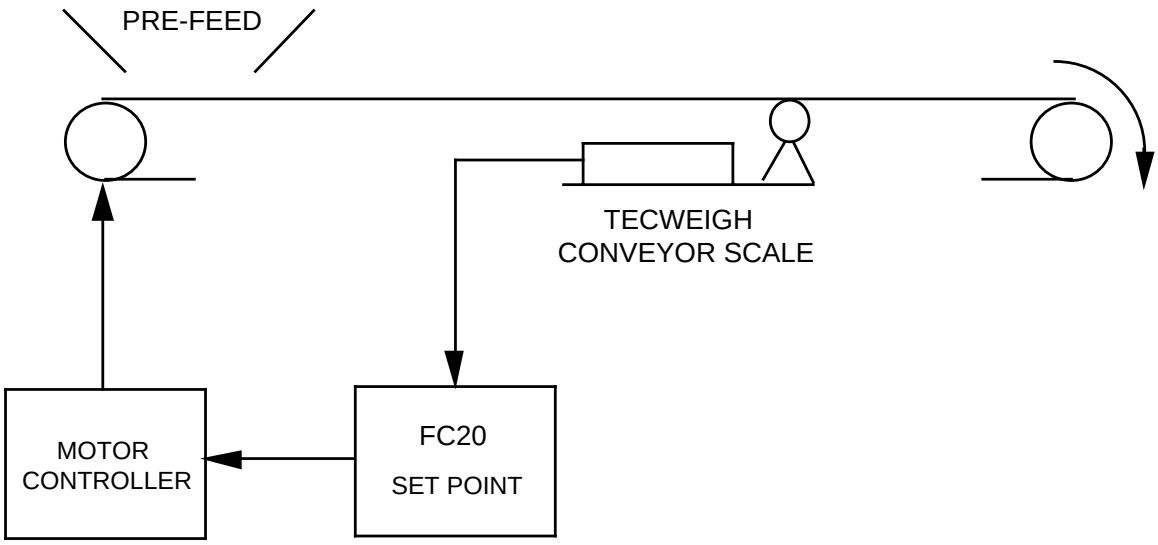

6.2 Control Mode Keys

The FC20 has three modes of control operation: OFF, MANUAL and AUTO. Each of the modes are selected by pressing one of the rate control keys located on the front panel display. A small LED will illuminate above the selected key, meaning the mode is active. The following is a description of each mode of Rate Control. See the figure on the following page for key locations.

OFF - This mode is used to shut down the entire feed rate process, either by disabling the conveyor belt speed or by disabling the material feed. When set in this mode, the Control Position will remain at its current setting. The FC20 provides two dry relay contact outputs which may be programmed as RUN contacts. If either are programmed as such, they can then be used to disable the material feed. When the Rate Control is in either MANUAL or AUTO, the programmed relay contact will enable the material feed. Once in the OFF position, the relay contact will change logic and disable the rate control process. An example of a RUN contact function would be to disable a variable speed drive via an interlock or run enable input. Alternatively it could switch a motor starter relay on and off. Note that the relay contacts of the FC20 are rated only at 50 VA. Do not wire more than 120vac through either relay output.

MANUAL – This mode is used to manually adjust the control position output. The RUN contact (Relay 3) is activated to enable material feed or conveyor belt speed. By using the up and down ARROW keys located on the front panel, the control position output may be adjusted by the operator. This function is most useful during start-up and calibration.

AUTO – This mode enables the automatic rate control. The RUN contact (Relay 3) is activated to enable material feed or conveyor belt speed. Changes to the Control Position are provided by the FC20. Pressing the Increase or Decrease keys will have no effect.

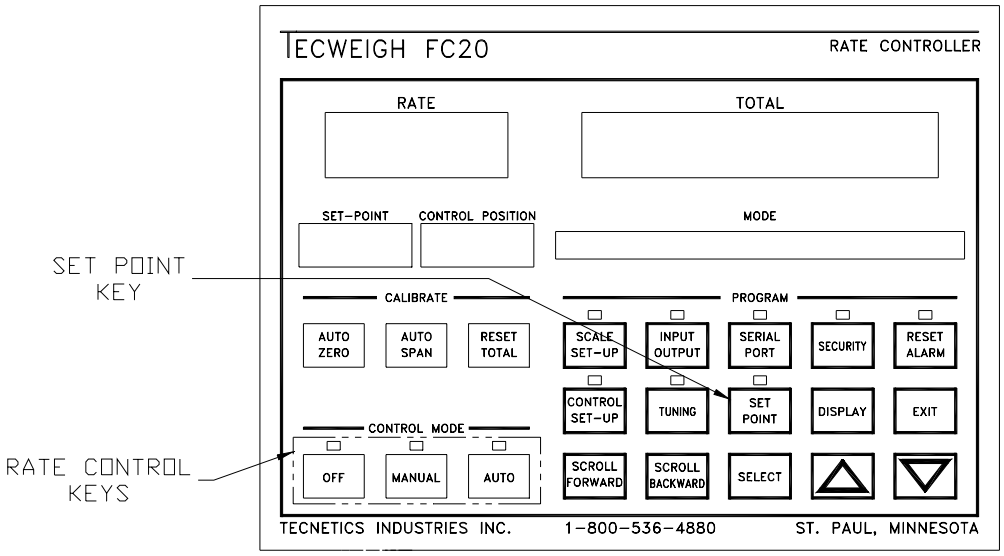

6.3 Set Point Key

The SET POINT entry key is used to select a desired feed rate. The FC20 employs three modes of set point functionality, LOCAL, REMOTE, and % REMOTE. The Set Point mode used is determined based upon the Rate Control application. Normally the LOCAL mode is used for single loop control. Other applications call for material blending where remote Set Points are required.

Locate the SET POINT key on the front panel of the FC20. Pressing this key will open the Set Point menu, allowing the operator to enter a new Set Point. The mode display will change to read **set-point: XXXX**. When the desired Set Point has been entered, press the EXIT key to return to normal control. Set Points may be entered at any time, even while a process is running.

The following are descriptions of each of the set point modes available in the FC20.

Local - When the Local Set Point mode is selected, the FC20 operates only as a single loop controller. The displayed Set Point represents a direct value of tons per hour, pounds per hour, or as indicated in the Mode display. If the Rate display uses a decimal point of XXX.X or XX.XX it will automatically reflect Set Point. For example, if the SET POINT display shows 250 and the unit of measurement is set to “tons per hour” , the Set Point would then be 250 tons per hour.

Remote - This Set Point mode enables the FC20 to receive remote set point signals. The incoming Set Point signals may be one of the following; 4-20 ma, 0-5vdc or a RS422 serial link. As signals are received, they are transferred to the Set Point display, functioning like a direct follower. The Set Point Menu located on the front panel is disabled. Received Set Points are scaled by the “set point zero” and the “set point span” modes located in the Control Set Up Menu. The remote set point is calibrated to direct units of measurement as indicated by the FC20, tons per hour, pounds per hour, etc.

% Remote - The % Remote mode is mainly used for blending applications. In many processes, the set point is a function of another process and is to track or be proportional to the other process. For example, one or more ingredients are required to track or follow the main ingredient. This type of relationship is often termed “Master Slave” or “Ratio” Control. The

displayed Set Point, when using this function, is actually a percent of the remote Set Point signals received by the FC20. It is adjusted by using the Set Point Menu located on the front panel display. The remote set point signal, however, must be initially scaled to represent direct units of measurement. See section 7.8 for SET POINT parameter.

One example of ratio control would be a cement to base blending system that proportions the flow of Portland cement as an additive into a “wild flow” aggregate feed.

The “wild flow” of aggregate is continuously measured as it passes over a TECWEIGH scale. The resultant feed rate signal is then transmitted to the cement FC20 which continuously acts to govern the flow of cement to maintain the user selected percentage. The cement flow is also weighed continuously by a TECWEIGH weighing feeder. The cement FC20 operates by automatically adjusting the speed of a screw-type pre-feeder which supplies the cement into the weigh feeder.

6.4 Single Loop Control

Single loop control is the most simple application of Rate Control. The Set Point is entered as a direct value of units of measurement as indicated by the FC20, tons per hour, pounds per hour, etc. Any remote Set Point signals received will be ignored. Refer to the following figure.

The following must be set for single loop control:

CONTROL SET-UP MENU:

feed to scale: XXX.XX	Distance from pre-feed to scale weigh idler (feet or meters)
sample time: XX	Rate sample time (typically 10 seconds)
min output: XXX.X %	Normally set to 10%. Do not set to 00.0% when controlling conveyor belt speed
max output: XXX.X %	Normally set to 100% (20 ma)
set point type: LOCAL	Enables the Local Set Point to represent tons per hour, pounds per hour, etc

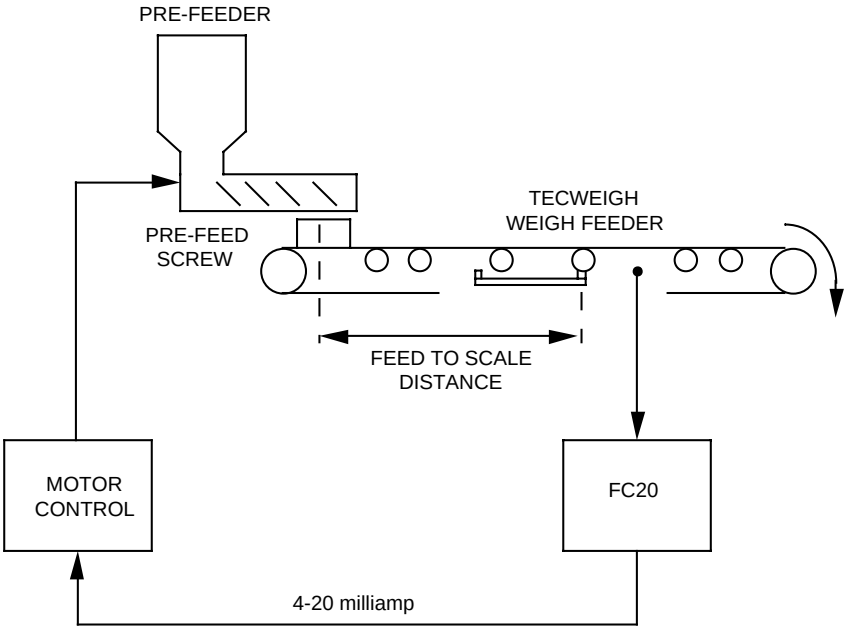

6.5 Single Loop Control using Remote Set Point

Single loop control using a remote set point provides for a follower type system. As remote Set Point signals are received, they are transferred to the Set Point display representing tons per hour, pounds per hour, etc. This signal may come from a remote PLC or computer or may be an analog signal (4-20ma, 0-5vdc, etc). Once the remote signal is scaled, the Set Point display will directly follow the incoming remote signal. Several FC20 rate control systems may be linked to one remote signal which may aid in plant automation. Note that the Set Point Menu is disabled when using the Remote Set Point mode.

The following must be set for single loop control using remote set point:

CONTROL SET-UP MENU:

Feed to Scale: XXX.XX	Distance from pre-feed to scale weigh idler (feet or meters)
Sample Time: XX	Rate sample time (typically 10 seconds)
Min Output: XXX.X %	Normally set to 10 %. Do not set to 00.0 % when controlling conveyor belt speed.
Max Output: XXX.X %	Normally set to 100 % (20 ma).
Setpoint Type: Remote	Enables the Remote Set Point to represent tons per hour, pounds per hour, etc.
Remote Set Pnt: Analog/Digital	Selects the remote set point type, ANALOG for 4-20ma or 0-5 vdc. DIGITAL uses the Serial Port.
Setpoint Zero: XXXX	Used to zero the remote set point signal.
Setpoint Span: XXXXX	Used to calibrate the full scale remote set point signal.

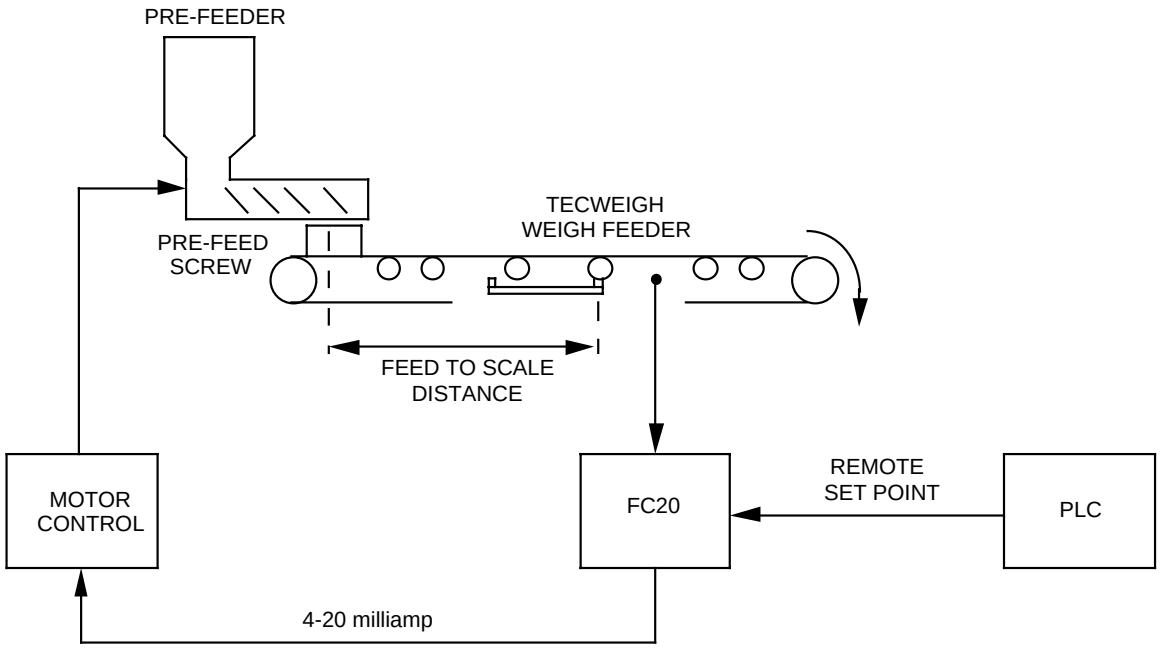

6.6 Ratio Control Using Remote Analog Set Point

Multi loop control using a Remote Set Point provides for a ratio type blending system. As remote Set Point signals are received, they are applied to the Local Set Point. The Local Set Point actually represents a percentage of the remote signal. Example, if the remote signal equals 150 tons per hour and the Local Set Point displays 50.0, the resultant set point value will be 75 tons per hour (50.0 % of 150 = 75). As the remote Set Point signal varies, the FC20 Set Point will always maintain the selected percentage. Note, the Remote Set Point Signal must be scaled to the units of measurement indicated by the FC20.

The following must be set for ratio control:

CONTROL SET-UP MENU:

Feed to Scale: XXX.XX	Distance from pre-feed to scale weigh idler (feet or meters)
Sample Time: XX	Rate sample time (typically 10 seconds)
Min Output: XXX.X %	Normally set to 10%. Do not set to 00.0% when controlling conveyor belt speed
Max Output: XXX.X %	Normally set to 100% (20 ma)
Setpoint Type: % Remote	The Local Set Point is displayed as percentage, 0-100%
Remote Set Pnt: Analog/Digital	Selects the remote set point type, ANALOG for 4-20ma or 0-5 vdc. DIGITAL uses the Serial Port
Setpoint Zero: XXXX	Used to zero the remote set point signal
Setpoint Span: XXXXX	Used to calibrate the full scale remote set point signal

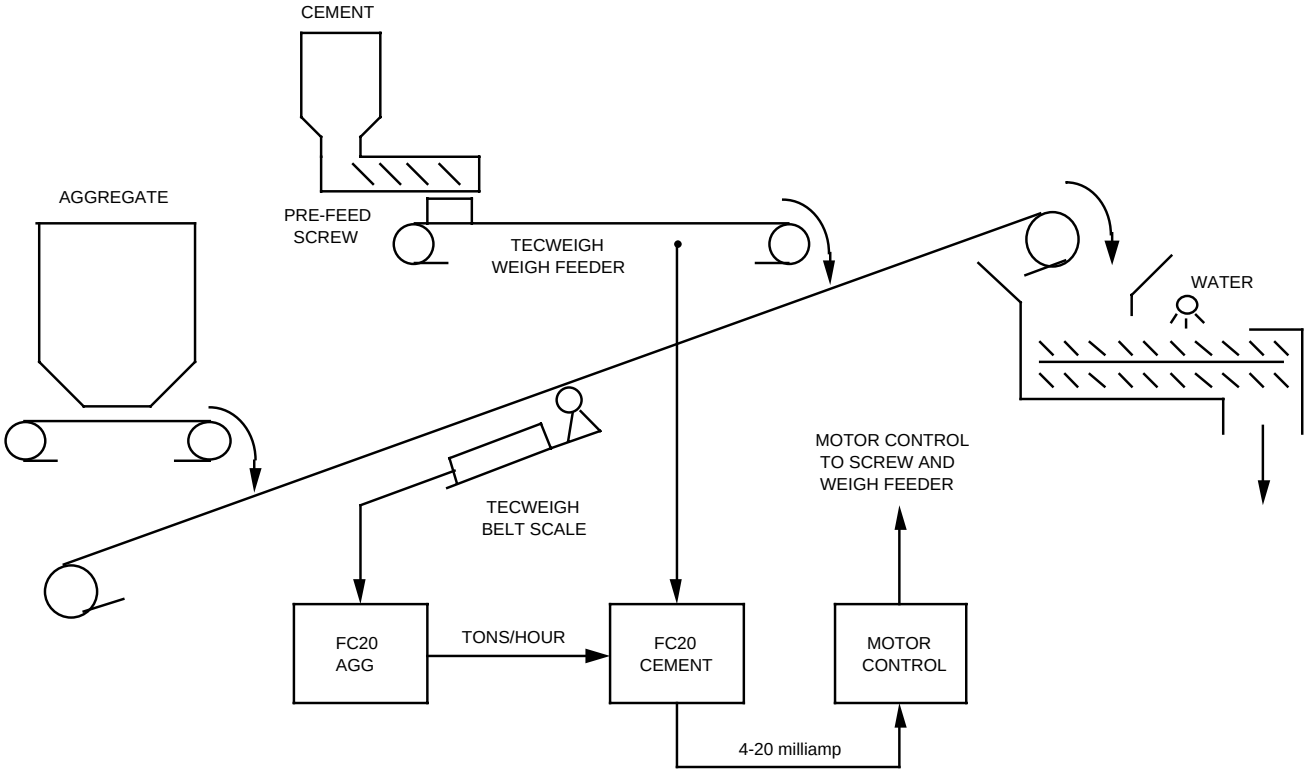

6.7 Reset Alarm

The FC20 is equipped with programmable HIGH/LOW alarms. The alarm contact outputs may be configured to open or close during an alarm condition. Alarm High and Low set points can represent out of tolerance bands for either Rate or Speed. A programmable "delay on operate" function is available to filter out spurious signals or to aid in start up sequences. The run alarm conditions will appear in the mode display as follows:

1.	Rate Alarm	indicates either a high or low rate condition
2.	Speed Alarm	indicates either a high or low speed condition
3.	External Alarm	indicates an external alarm condition. (Programmable function of Terminal 3 input)

When using a RATE ALARM function, the FC20 has the ability to set a tolerance band around the Rate Control Set Point. The operator may, for example, program the FC20 to ALARM when the actual feed rate deviates 10 % above or 20 % below the feed rate Set Point. See Section 7.5 for relay parameters.

The LED located just above the RESET ALARM key will flash during any of the above alarms.

The Alarm Output mode, located in the Control Set-Up Menu, is used to hold the Control Position to a pre-selected percentage, during any valid alarm condition.

The operator acknowledges the alarm by pressing the RESET ALARM key. This extinguishes the LED and the Mode display resumes to the pre-alarm state. The condition that created the alarm must now resume a non-alarm status before it can be recognized as a new alarm condition.

The FC20 has a programmable input function for the Terminal 1 input (RST). It may be set to either remotely reset the TOTAL display or to reset an ALARM condition. Connecting this input to Terminal 10 (COM) will activate the reset condition.

Section Seven

Parameter Table

7.1 Factory Settings

For quick reference, chapter 11.4 shows a summary of all the parameter values that were entered at the factory for your particular application. Each application will require some customization of the Factory Settings. After customizing the parameters for your particular installation write down the values you use for future reference. Note, it is critical you do not rely entirely on the factory values! Learn about each parameter and enter the value that best meets your needs.

7.2 Parameter Definitions, General

Read each parameter description and enter the appropriate value for your application. Your particular application or desired options may not require setting all parameters. In addition, it is recommended that you properly calibrate the scale before enabling the optional outputs.

The entire Parameter table is consecutively numbered for easy reference when contacting our Technical Staff, if required, during set up. If a Parameter has a set of parentheses with numbers contained within them, then this parameter interacts with another parameter and should also be referenced when deciding if it is usable for your installation.

7.3 Scale Set-Up Menu Parameters

The Scale Set-up Menu contains parameters which refer to the actual weighing and calibration functions of the FC20. Parameters such as Cal Wt, Wgh Span, Cal Factor are critical to the accuracy of the weighing system. Other functions such as decimal points and damping mainly refer to display options. Listed below are all of the menu items which will appear in the Scale Set-up Menu.

1) Units: - Select the desired units of measure for the rate display. The total display will use the weight portion of the rate units selected. If you select any English units, you must do all setup using English units and similarly for metric units. Once set up, however, you can change the rate units at any time and all calibration related parameters will be converted automatically.

English Units		***Metric Units***	
TONS/HR	tons per hour	TONNES/HR	tonnes per hour
TONS/MIN	tons per minute	TONNES/MIN	tonnes per minute
PPH x 1000	pounds per hour x 1000	KG/HR	kilograms per hour
LBS/HR	pounds per hour	KG/MIN	kilograms per minute
LBS/MIN	pounds per minute		

2) Cal Factor: - The calibration factor accounts for physical differences between scale types. Select the appropriate value below for your scale model or select .03 if you will be using a calibration chain instead of the supplied calibration weight.

WY10	.27	WY10HD	.54
WY15	.36	WY20	.54
WY25	.36	WY25	.36
WF18	.36	WF10	.27

2) Cal Wt: - Enter the exact value of the calibration weight. This value should be stamped on the end of the calibration weight (in pounds) if you are using one from the factory. Enter in pounds when using English units or kilograms when using metric. Set this parameter to zero if you are using a calibration chain instead of the supplied calibration weight (KG = 0.453 X LBS).

3) Cal Chn: - Enter the weight per length of the calibration chain if you are using a chain instead of the supplied calibration weight. To determine this value, weigh the chain and measure its length. Then divide the weight by the length. Enter in pounds per foot if using English units or kilograms per meter if using metric.

4) Wgh Span: - The weigh span is the length of belt directly over the scale. The weigh span equals the distance from the idler before the scale to the idler after the scale divided by 2. Units are inches if using English or meters if using metric.

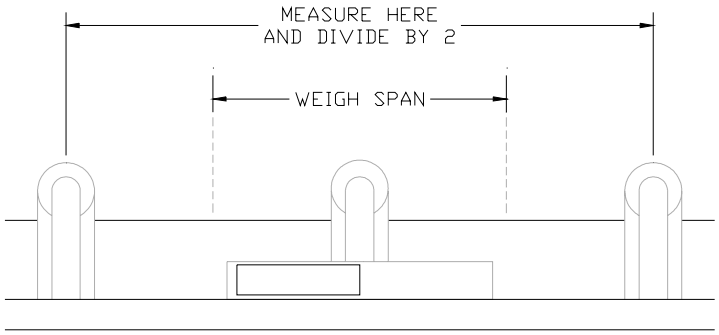

5) Belt Len: - Enter the exact length of the conveyor belt in feet if using English or meters if using metric. Note, do not enter the conveyor length! Enter the entire belt length as if it was cut and stretched out flat on the ground.

7) P/P Wt: - The pre/post weight will be used for a material test calibration. Leave it equal to zero if you are setting up for the first time. During calibration, material will be dispensed into a truck and weighed on a stationary scale. The stationary scale weight will then be entered in the P/P Wt parameter. The FC20 total and stationary scale weight total will be compared and tuning adjustment made. This test will be discussed more in the calibration section.

8) AZT: - Auto Zero Tracking or AZT compensates for material build-up or other conditions that cause the rate to fluctuate from zero even when the belt is empty. The AZT value is a rate. When the actual rate falls below the AZT rate, the FC20 provides two options. The first option simply forces the displayed rate to be zero (even though it may not be exactly zero) and stops the totalizer. The second option actually performs an Auto Zero calibration when the rate falls below the AZT rate. Set AZT = 0 to disable it or set AZT to about 5% of your normal running rate if you wish to enable the feature. If you typically run at low rates it is recommended

that you leave the AZT disabled. ***Leave AZT=0 when you are first setting up the unit to avoid complications and confusion.***

9) Trck Revs: - Track revs is directly related to AZT. If Track Revs=0, and AZT is enabled, the displayed rate will be forced to zero when the actual rate falls below AZT (option one). If Track Revs is not zero, the FC20 Controller will show a rate of zero and do an Auto Zero calibration if the rate falls below AZT for longer than the number of belt revolutions in Track Revs (option two). Refer to the graph that follows. Assume the normal running rate is 200 tons per hour, AZT is set to 10 tons per hour and Track Revs is set to two belt revolutions. When the rate falls below AZT for less than two belt revolutions as indicated by the first dip, the rate display is forced to zero. If the rate falls below AZT for more than two belt revolutions, an Auto Zero is performed and what used to be about five tons per hour is now zero tons per hour. This can happen when material sticks to the belt effectively making it heavier. If you wish to use this feature, enter a value for Track Revs that allows at least 5 minutes of tracking before the Auto Zero begins to allow time for the conveyor belt to completely empty.

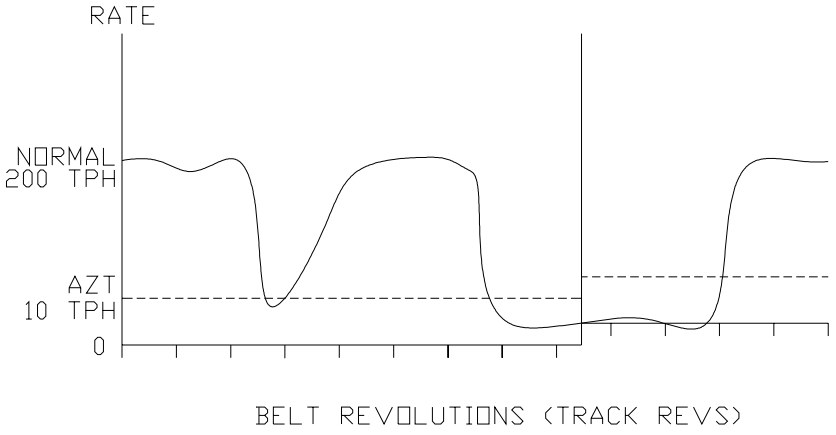

Note, when AZT is enabled, each time the rate falls below the AZT rate, the "zero tracking" message appears in the MODE DISPLAY as a notice only. Pressing any key will remove the message or it will disappear automatically when the rate climbs above AZT again.

10) Zero Revs: - When AUTO ZERO is pressed, the FC20 will zero the scale. Enter the number of belt revolutions used for an Auto Zero cycle. Typically, the more time (more belt revolutions) given for an Auto Zero, the more accurate it will be. As the Auto Zero cycle is being performed, the FC20 spends time learning about the belt splices and other inconsistencies in the system. Enter a value that allows at least 2 minutes of run time. Auto Zero is discussed more in the calibration section.

11) Span Revs: - When AUTO SPAN is pressed, the FC20 will re-span the scale using calibration weights or a calibration chain. Enter the number of belt revolutions used for an Auto Span cycle. Typically, the more time (more belt revolutions) given for an Auto Span, the more accurate it will be just as with an Auto Zero cycle. Enter a value that allows at least 2 minutes of run time. Auto Span is discussed more in the calibration section.

12) Rate DP: - Enter the desired decimal point position for the RATE WINDOW. Set to ONES when your maximum rate will be greater than 100, set to TENS when your maximum rate will be less than 100 and set to HUNDS when your maximum operating rate will be less than 10.

If the rate exceeds what will fit in the display, a series of dashes will show in the RATE WINDOW so it looks like ---- .

ONES	0000
TENS	00.0
HUNDS	0.00

13) Rate Damp: - Enter the damping factor for the rate display. Damping makes the rate display more stable so the numbers do not change faster than they can be read. A higher setting allows for a more stable reading. Rate damping does not effect the total or the accuracy of the system. Note, when damping is high, the displayed rate will update slowly after changes in actual rate. Set to zero to turn off damping. Typical value for Rate Damp is 30.

14) Speed DP: - Enter the decimal point position for the belt speed display. Set to ONES when your maximum belt speed will be greater than 100, set to TENS when your maximum belt speed will be less than 100 and set to HUNDS when your maximum belt speed will be less than 10.

ONES	0000
TENS	00.0
HUNDS	0.00

15) Speed Damp: - Enter the damping factor for the belt speed display. Damping simply makes the speed display more stable so the numbers do not change faster than can be read. A higher setting allows for a more stable reading. Speed damping does not effect the rate, total or accuracy of the system. Note, when damping is high, the displayed speed will update slowly after changes in actual speed. Set to zero to turn off damping. Typical value for Speed Damp is 30.

16) Speed Spn: - The speed span is used to calibrate the belt speed if the FC20 displayed speed does not equal the tested or calculated belt speed. Increase Speed Spn to make the speed read higher or decrease to make the speed read slower. This is discussed more in the calibration section.

17) Total DP: - Enter the decimal point position for the TOTAL window. Higher rates make decimal position unnecessary because the total increments by more than one unit at a time. Set as desired. If the total exceeds what will fit in the display, a series of dashes will show in the TOTAL WINDOW so it looks like ---- .

ONES	00000000
TENS	000000.0
HUNDS	00000.00
THOUS	0000.000

18) Down Count: - This mode will enable or disable down counting of the TOTAL display. When set to down count: NO the totalizer will not count down (backwards) when the RATE display is indicating negative. Note: The AZT parameter must be set to 0000.

YES	enables down counting.
NO	disables down counting.

19) ASC: - After the FC20 calculates the rate, it multiplies that number by the ASC (Auto Span Correction) factor before displaying it in the RATE WINDOW. In an ideal setup, ASC would remain 1.000 which means that no correction is being made to the rate. Every system requires tuning, however. After calibrating your scale (discussed in the next section) you can

manually increase or decrease the ASC value to correct the displayed rate or you can do a material test and the proper ASC value will be computed automatically. For example, if the tested material weight ends up being 1.06 times the FC20 total, the ASC value will be changed to 1.06 times the previous ASC value. From that point on, the FC20 Controller will calculate the rate and then multiply it by the new ASC before displaying it. Note, the typical range of values for ASC should be between 0.900 and 1.100. If your system requires an ASC value outside this range, consult the trouble shooting section.

20) Load Counts: - For technical trouble shooting, the FC20 displays raw counts from the weight sensors. With the calibration weight lifted, the counts will be low and with the calibration weight down, the counts should be high. The low/high range varies from system to system, but it should be consistent from day to day for the same system. See the Trouble Shooting section for more details on raw load counts.

21) Zero Counts: - This Parameter is not editable. For technical trouble shooting this parameter displays the Load Counts that the processor is using as a Zero Reference. This viewable Parameter is calculated during the Auto Zero function.

22) Span Counts: - This Parameter is not editable. For technical trouble shooting this parameter displays the Load Counts that the processor is using as a Span Reference. This viewable Parameter is calculated during the Auto Span function.

23) Span Detect: - During an AUTO SPAN the processor waits for a change in the load cell signal before initiating the function. This Parameter represents the change in load cell signal required start the AUTO SPAN function. The factory setting should be adequate unless a change in load cell weight in made in the field. This parameter entry should be approximately 75% of the total change in Load Counts between the calibration weight being up and down.

7.4 Control Set-Up Menu Parameters

The Control Set-up Menu is used to program the FC20 for feed rate control applications. Some of the settings may need slight adjustments after the system has been run. The FC20 was designed to account for variable speed conveyor belts. The “feed to scale” entry along with the “sample time” entry will accommodate for these applications. Output control is selectable either a 4-20ma signal or contact closure is available as needed. Local, Remote or % Remote set points provide for single loop control or Master set point type applications. Remote set points may be scaled to represent actual tons per hour, pounds per hour, etc. Listed below are descriptions of the program modes located in the Control Set Up Menu.

24) Feed to Scale: XXX.XX -Enters the distance from the pre-feeder to the scale carriage weigh idler and might be critical to maintaining Set Point. This entry is required by the FC20 to allow material feed to reach the weigh idler before corrections are made. If the distance is entered too low the FC20 will make decisions before it “sees” what its last correction produced. This will cause wide variations in RATE making it difficult to maintain Set Point. If set too high it will only slow down control response.

000.00 - 999.99 feet
or
000.00 - 304.79 meters

Enter this distance from the exact center of material feed to the exact center of the belt scale weigh idler or idlers.

25) Sample Time: XX Selects the time delay (0 - 99 seconds) after the feed to scale distance has elapsed. The FC20 will make corrective actions based upon the average feed rate during the sample time duration. A longer sample time yields a more accurate feed rate sample. It is recommended to set this parameter between 5 and 10 seconds. Note that this function of the FC20 decreases control loop response.

26) Min Output: XXX.X % - Used to preset the minimum control output limit. The Control Position display located on the front panel indicates control output in percent. When rate control is being derived by controlling conveyor belt speed, make sure that a min output is set other than zero. The FC20 uses belt speed as part of its control loop delay. If a zero belt speed condition occurs, the FC20 will never respond to errors in feed rate.

27) Max Output: XXX.X % - Used to preset the maximum control output limit. The Control Position display located on the front panel indicates control output in percent.

28) Alarm Output: XXX.X % - The Alarm Output function is used to lock or hold the Control Position to a pre-selected percentage, in cases of Rate, Speed or External alarm conditions. For example, if the operator sets the Alarm Output to 25 %, and an alarm condition occurs, the Control Position Display will hold at 25 %. The Control Position display represents the percentage of output current located at terminals 32, 39 and 10. The Control Position will return to an automatic state if either one of the following conditions are met, a). the alarm condition returns to a "safe condition" , or b). the operator presses the "Reset Alarm" switch located on the front panel keypad. An Alarm Output setting of 000.0 % disables the alarm output function.

29) Setpoint Type: LOCAL/ REMOTE/ %REMOTE - This parameter selects the function of the FC20 set point. When set to **LOCAL** the displayed set point represents direct tons per hour, pounds per hour, etc. When set to **REMOTE** the local set point will be disabled and only set points received remotely will be active. The incoming remote set point must be scaled initially for proper operation. If set to **%REMOTE** the displayed set point will now represent a percentage of the incoming remote set point, 0 -100%. Note that the remote set point must be scaled. See modes 8 and 9 below.

30) Remote Set Pnt: ANALOG/ DIGITAL - Active only when parameter 29 is set to **REMOTE**. Selects the type of remote set-point signal. When set to **ANALOG**, either a 4-20ma or 0-5Vdc signal may be received. If the signal is milliamps, install J12. Selecting DIGITAL will then allow for remote set point data to be received by the Serial Port, terminals 90-93. The following two modes are used to scale the remote set point signal.

31) Setpoint Zero: XXXX - Active only when parameter 29 is set to **REMOTE**. It is used to zero out the minimum input signal received as a remote set point. When the remote set point is at its minimum value, the user would adjust the "set point zero" setting until the Set Point display indicates 0000 (0000 tons per hour, pounds per hour etc.).

32) Setpoint Span: XXXX - Active only when parameter 29 is set to **REMOTE**. It is used to set the full scale value of the remote set point. When the incoming set point is at its maximum value, adjust the "set point span" until the displayed set point represents maximum set point. Note, the displayed set point is to be scaled in tons per hour, pounds per hour , etc.

33) Start Ctl Pos: - This parameter works in conjunction with the following parameter, Ctl Above Rate. These two parameters are useful when the loading on the belt will be interrupted and, in normal operation, the control position would go the the allowable maximum in an effort to attain the Set Point Rate. This Parameter sets the Control Position the FC20 will go to when

the Rate dips below the acceptable Rate you wish to control. That default Rate is controlled by the Ctl Above Rate Parameter. To disable set to 0000.

34) Ctl Above Rate: - This parameter works in conjunction with the preceding parameter, Start Ctl Pos. These two parameters are useful when the loading on the belt will be interrupted and, in normal operation, the control position would go the the allowable maximum in an effort to attain the Set Point Rate. This Parameter sets the minimum rate at which you want the FC20 to start PID functions. At any point during automatic operation, the actual rate should go below the rate indicated by this parameter, the CONTROL POSITION will go to the setting determined by the parameter 33. The Control Position will be maintained until the actual rate exceeds this parameter value. To disable set to 0000.

7.5 Input Output Menu Parameters

The Input Output Menu may be used to set-up and calibrate the FC20's I/O capabilities. For example, relay outputs may be programmed to operate as HIGH and LOW alarms. Other applications may require remote reset capabilities or a PLC interface. This section lists all of the I/O functions (excluding the serial port) available in the FC20 for remote interface.

35) Simulation: - When ON is selected, the FC20 produces an artificial rate, speed, and total which can be useful for setting up accessories. The simulated values are: Speed = 376 feet per minute; Rate = value entered in Sim Rate parameter; Total = calculated based on Sim Rate. Signal wires to the carriage need not be attached. This mode is used during calibration of optional equipment such as chart recorders, PLC's, feed rate controllers, remote displays, etc. When simulation is ON, the TOTAL display is automatically stored to memory and will be automatically recalled when simulation is set to OFF or by pressing EXIT.

ON = Simulated rate, belt speed, total
OFF = Normal Run Mode.

36) Sim Rate: - The simulated rate displayed when Simulation Parameter is set to ON.

37) Ctl mA Zero: - This parameter will adjust the low setting of analog output AI1+/-. The m/amp zero setting does not represent actual current. Increasing the m/amp zero setting will increase the current at AI1+ and decreasing the setting will decrease the current. For a 0 mA minimum setting this Parameter should be approximately 00.0. For a 4 mA minimum setting this Parameter should be approximately 04.0.

38) Ctl mA Span: - Used to calibrate the maximum output signal from AI1+. The m/amp span setting does not represent actual current. Increasing the m/amp span setting will increase the current and decreasing the setting will decrease the current.

39) Rate Base mA: - Enter the rate current loop output desired at terminal AI2+ when the rate equals zero. Typically, auxiliary devices will use 0 mA or 4 mA to reflect zero rate.

40) Rate at 20mA: - Enter the rate corresponding to a current loop output of 20 mA. This rate should be about 10% higher than the maximum rate expected. If the actual rate exceeds the value in this parameter, the current loop output will remain at 20 mA.

41) Rate mA LTrim: - This parameter allows tuning of the Rate Base mA output Parameter. Raise the number to increase the current and decrease the number to decrease the current.

42) Rate mA HTrim: - This parameter allows tuning of the Rate at 20mA output Parameter. Raise the number to increase the current and decrease the number to decrease the current.

43) Rate mA Damp - Enter the damping factor for the rate current loop. The damping factor smoothes the current signal. Like rate and speed damping, the current loop damping does not affect accuracy. With high damping, however, the signal may lag behind the actual rate. Typical value for mA Damp is 15.

44) HFR Damp - Enter the damping factor for the High Frequency Rate (HFR) output if used. The HFR output pulses at 10 times the rate. The damping factor smoothes the HFR signal. Like rate and speed damping, the HFR damping does not affect accuracy. With high damping, however, the HFR signal will lag behind the actual rate. Typical value for HFR Damp is 30.

45) RLY 1 Func - Relay 1 can perform four different functions. Select the function desired.

TPR - Total Pulse Repeater--closes relay contact at increments of the total
HLRA - High/Low Rate Alarm--closes relay outside of given rate range
HLSA - High/Low Speed Alarm--closes relay outside of given speed range
SPAN - Auto Span output--closes relay during Auto Span for lowering/raising weights

Note, the following relay parameters will appear only when the associated relay function is selected. TPR uses RLY 1 Pls and TS. HLRA and HLSA use RLY 1 Low, High and Delay. SPAN does not use any other parameters.

46) RLY 1 Pls - When TPR is being used, enter the duration of the relay pulse in seconds for driving a remote totalizing device. The relay must be closed for at least 0.10 seconds, but you have the option of keeping it closed for longer so long as it does not conflict with the RLY 1 TS parameter (the relay cannot be closed longer than the time between pulses). Start with 0.10 seconds and increase if your totalizer is not picking up the signal.

47) RLY 1 TS - When TPR is being used, enter the frequency of the relay pulse or the "total scaling". For example, set RLY 1 TS to 1.00 to close the relay every 1 ton. Set to .01 to close the relay every .01 tons. If RLY 1 TS is set too small and the rate is too high, there will not be enough time to open and close the relay. It is best to set it so the relay closes once every few seconds.

48) RLY 1 Set pnt: - Selects the function of the RLY 1 Rate Alarm set points. This mode is only valid when RLY 1 function is set to RATE ALARM. If the user selects DIRECT, the rly 1 high and low alarm set points will represent actual RATE. If set to PERCENT, the rly 1 alarm set points will represent deviations from the FC20 set point in percent. Example, an alarm condition may be valid when the RATE deviates 10% below or above the FC20 rate set point.

49) RLY 1 Low: - When HLRA is being used, enter the lowest rate allowed before the low rate alarm relay is closed. When HLSA is being used, enter the lowest speed allowed before the low speed alarm relay is closed.

50) RLY 1 High: - When HLRA is being used, enter the highest rate allowed before the high rate alarm relay is closed. When HLSA is being used, enter the highest speed allowed before the high speed alarm relay is closed.

51) RLY 1 Delay - When HLRA or HLSA are being used, enter the delay in seconds that an alarm condition can exist before the alarm relay closes. For example, setting the delay to 10 seconds will allow the rate to fall below RLY 1 Low for 10 seconds before the alarm is activated. The delay prevents false or nuisance alarms when the rate or speed only go outside the boundaries for a short time.

52) RLY 2 Func - Relay 2 can perform four different functions. Select the function desired.

TPR - Total Pulse Repeater--closes relay contact at increments of the total
HLRA - High/Low Rate Alarm--closes relay outside of given rate range
HLSA - High/Low Speed Alarm--closes relay outside of given speed range
SPAN - Auto Span output--closes relay during Auto Span for lowering/raising weights

Note, the following relay parameters will appear only when the associated relay function is selected. TPR uses RLY 2 Pls and TS. HLRA and HLSA use RLY 2 Low, High and Delay. SPAN does not use any other parameters.

53) RLY 2 Pls - When TPR is being used, enter the duration of the relay pulse in seconds for driving a remote totalizing device. The relay must be closed for at least 0.10 seconds, but you have the option of keeping it closed for longer so long as it does not conflict with the RLY 2 TS parameter (the relay cannot be closed longer than the time between pulses). Start with 0.10 seconds and increase if your totalizer is not picking up the signal.

54) RLY 2 TS - When TPR is being used, enter the frequency of the relay pulse or the "total scaling". For example, set RLY 2 TS to 1.00 to close the relay every 1 ton. Set to .01 to close the relay every .01 tons. If RLY 2 TS is set too small and the rate is too high, there will not be enough time to open and close the relay. It is best to set it so the relay closes once every few seconds.

55) RLY 2 Set pnt: - Selects the function of the RLY 1 Rate Alarm set points. This mode is only valid when RLY 2 function is set to RATE ALARM. If the user selects DIRECT, the rly 2 high and low alarm set points will represent actual RATE. If set to PERCENT, the rly 2 alarm set points will represent deviations from the FC20 set point in percent. Example, an alarm condition may be valid when the RATE deviates 10% below or above the FC20 rate set point.

56) RLY 2 Low: - When HLRA is being used, enter the lowest rate allowed before the low rate alarm relay is closed. When HLSA is being used, enter the lowest speed allowed before the low speed alarm relay is closed.

57) RLY 2 High: - When HLRA is being used, enter the highest rate allowed before the high rate alarm relay is closed. When HLSA is being used, enter the highest speed allowed before the high speed alarm relay is closed.

58) RLY 2 Delay - When HLRA or HLSA are being used, enter the delay in seconds that an alarm condition can exist before the alarm relay closes. For example, setting the delay to 10 seconds will allow the rate to fall below RLY 2 Low for 10 seconds before the alarm is activated. The delay prevents false or nuisance alarms when the rate or speed only go outside the boundaries for a short time.

59) RLY 3 Func: - Run interlock relay. Not a programmable output. This relay is dedicated as a run interlock relay for the conveyor or pre-feeding device.

60) T1 func: RESET TOTAL / RESET ALARM - This mode programs the function of the Terminal 1 input. When this input is momentarily connected to Common (terminal 10), the programmed function will be activated. If the user selects RESET TOTAL, this input may be used to remotely reset the TOTAL display. If T1 func is RESET ALARM, then Terminal 1 may be used to reset the FC20 alarm conditions remotely, (Rate/Speed high/low alarms or External Alarms).

61) T3 func: AUTO ENABLE / RUN ENABLE / EXT ALARM - This mode programs the function of the Terminal 3 input. When this input is connected to Common (terminal 10), the programmed function will be true. When set to AUTO ENABLE, the T3 input may be used to

remotely disable the FC20 control loop by disconnecting it from terminal 10. This would basically set the system to manual condition where the feed rate would be allowed to run freely. If set to RUN ENABLE, disconnecting T3 from terminal 10 would cause a complete shut down of material and rate control. Note that either RLY 1 or RLY 2 must be programmed as RUN contacts and then be wired to shut down the material feed as required. If this function is programmed to EXT ALARM, the input may be used to set the FC20 into an alarm condition.

62) T3 delay: xx - Delay in seconds (00 to 99) before the function of T3 input is true. For example, T3 is programmed to be an External Alarm input, and T3 delay is set at 10, the FC20 will not acknowledge that terminals 3 and 10 are open for a period of 10 seconds.

7.6 Tuning Menu Parameters

The Tuning Menu is used to program the FC20 to maintain the selected set point. Typically the FC20 is set to AUTOMATIC tuning. Selecting this function means that operator need not worry about "fine tuning" the PID parameters. All adjustments are calculated internally be the FC20.

The FC20 incorporates a PID control system. The FC20's output is adjusted up or down in response to any lack of balance between "set point" and "rate" . The output controls the actual feed rate by adjusting the pre-feeder or conveyor belt speed. The control output is referenced to the Control Position display located on the front panel of the FC20. This value is in percent of output.

PID stands for Proportional - Integral - Derivative. These three parameters are used to calculate a new output as required to achieve and maintain a set point. Proportional, being the heart of the control loop, makes its contribution by finding the percent of error between Rate and Set Point. It then adjusts the control output (milliamps) by the same percentage of error. Integral is used to make up for small errors when the Rate is near Set Point. In some cases, the Proportional contribution may not be able to make extremely small adjustments, thus creating offset. Integral uses a "sum error" calculation and continuously adds to or subtracts from the control output until Set Point is achieved. Derivative only responds to how quickly errors are being produced. If a sharp Rate change is detected, Derivative will give a "kick" to the control output. Slow changes in error are basically ignored by the Derivative function.

63) Tuning: MANUAL / AUTOMATIC -This mode will select the Auto Tune mode of the FC20 PID control loop. When set to **AUTOMATIC**, the parameters listed below do not require adjustment since the FC20 determines them automatically. When set to **MANUAL**, the user must then adjust PID values listed below to provide for adequate control loop response.

64) Proportional: X.XXX -Adjustable from 0000 to 9999. The proportional setting determines the amount of error percentage to be applied to the control output. Increasing this setting will increase the amount of correction that is applied to the control output based on the percentage of error. If set to high, the Rate may tend to continuously overshoot Set Point, above and below. If set to low, the controller will take to long to achieve Set Point. Some amount of "trial and error" may be required before satisfying this parameter.

65) Integral: X.XXX -Adjustable from 0000 to 9999. The Integral parameter is used to prevent offset conditions of the controller. In some cases, the Proportional contribution to the control output may tend to drop off when nearing set point. This may result in an offset condition preventing the FC20 from achieving set point. The Integral function prevents this from occurring. Errors between Set Point and Rate are summed over time and then applied to the control output. Increasing the Integral setting will increase the amount of time it will take to

dissolve any errors that Proportional cannot eliminate. Decreasing this setting will decrease the time duration. Note if set to low, oscillation may occur.

66) Derivative: X.XXX -Adjustable from 0000 to 9999. The Derivative function provides its contribution by responding only to the rate of change in errors. A fast change in error between Set Point and Feed Rate yields high contributions from the Derivative output. As the rate of change in errors slow to set point, the Derivative output will drop off to zero. Increasing the Derivative setting will increase its contribution to the control output.

7.7 Serial Port Menu Parameters

67) Station ID - When using the serial communication features on the FC20 with multiple units, each unit must have a unique address or Station ID. Select a unique Station ID from A to P for each unit.

68) Parity - When using the serial communication features on the FC20 select the same parity type as your remote device.

69) Baud Rate - When using the serial communication features on the FC20, select the same baud rate as your remote device.

70) Command Menu - When using the serial communication features on the FC20, select what data will be broadcast from the serial port. See Section 9 for complete details on serial communication options.

7.8 Set Point Menu Parameters

71) Setpoint: - Used to enter the FC20 Feed Rate Control Set Point. Pressing the Set Point button located in the Program section of the front panel keypad will open the Set Point Menu and allow changes to be made. The Set Point display will be updated automatically as changes are made in the Mode display. The FC20 has a programmable set point function located in the Control Set-Up Menu. The various types of set points are described below.

Local: When using the local set point function, the Set Point display simply indicates a direct reading of tons per hour, pounds per hour, etc. Example, if the FC20 units of measurement is set to TONS/HR and a set point of 250 is displayed, the rate controller will adjust the feed rate until the RATE display indicates 250 tons per hour.

Remote: Selecting a remote set point will automatically disable the local set point function above. All remote set points received by the FC20 will go directly to the Set Point display. The display value will represent actual RATE in tons per hour, pounds per hour, etc. This incoming signal must be scaled before actually running the FC20. The following is a example of how to scale a remote set point to represent direct units of measure.

If the units of measurement is “tons per hour” and the remote set point is to be scaled to indicate a full range of 0 - 150 TPH, the following must be completed:

a). Set the incoming remote signal to its minimum value (0 vdc, 4 ma,etc.).
b). Press the Control Set Up Key to open the Control Set Up Menu.
c). Scroll forward to locate the set pnt type mode and change it to read set pnt type: REMOTE.
d). Press Scroll Forward advancing to the set point zero mode.
e). Adjust the “set point zero” value until the Set Point display indicates 000.
f). Set the incoming remote signal to its full scale value (5 vdc, 20 ma, etc).
g). Press Scroll Forward advancing to the set point span mode.

h). Adjust the “set point span” value until the Set Point display indicates 150.
i). Press the Exit key, ready to run.

Once the above example is scaled, the Set Point display will directly follow the incoming remote signal, representing the actual set point in tons per hour.

% Remote: This type of set point function is mainly used where multiple weigh scales must be blended while using a remote master set point. The % REMOTE means the displayed set point will actually indicate a percentage of a incoming remote set point. Before running the system, the incoming remote signal must be scaled to represent tons per hour, pounds per hour, etc. Use the example for REMOTE listed previously when initially scaling the remote inputs.

Once the Remote Set point is scaled, the “set point type” mode located in the Control Set Up menu must be changed to read set point type: % REMOTE. This will enable the local set point, which will now represent 0 - 100 % of the incoming remote signal. An example is as follows: assume the incoming remote signal equals 80 tons per hour, and the displayed set point indicates 50.0 (50.0 %). The actual FC20 rate set point would then be 40 tons per hour since 50 % of 80 tons per hour equals 40.

7.9 Security Menu Parameters

72) Lock Auto Zero: - Select YES to disable the AUTO ZERO key.

73) Lock Auto Span: - Select YES to disable the AUTO SPAN key.

74) Lock Reset: - Select YES to disable the RESET key.

75) Lock Rate Cntl: - Select YES to disable the Rate Control Keys.

76) Lock Set Point: - Select YES to disable the Set Point Menu Key.

77) Lock Code – A Lock Code can be entered to prevent unauthorized personnel from entering any of the Parameter Menus. This feature combined with the other key locks above give a high level of security to the FC20. The above key locks need to have the parameter changed to “NO” before any use is returned to the keys. When a Lock Code has been entered an Enter Lock Code message appears on the Mode Window giving the operator an opportunity to enter the code. Once the operator has accessed the Parameter menu he can access all the menus without re-entering the code until the exit key is pressed. “00000” disables the Lock Code.

78) Save Params - When changed to YES, all parameters will be saved to flash memory upon exiting Program Mode. If parameters get corrupted from an electrical spike or lightning for example, the FC20 will retrieve and restore the parameters from flash memory. Once you have calibrated the system and have it working as desired, select YES and exit to save the parameters.

Section Eight

Calibration

8.1 Power Up The System

Assuming all parameters are correct and the unit is installed properly, you can now calibrate the scale. Without calibration, the scale will only approximate the rate. You must do a material test and tune the system. Calibration requires toggling back and forth between Run Mode and Program Mode. Remember, press and hold the FUNCTION key for five seconds to toggle between the two modes. If necessary, refer back to Section 5 for instructions on how to operate the key pad and navigate through the menus.

Turn on the conveyor, make sure the belt is clean, and let the whole conveyor system warm up for approximately one hour. Power up the FC20 if it is not already on. If the FC20 Controller says "Scale Data Error" there is a communication problem between the scale and the FC20 Controller which must be fixed. Consult Section 10 for troubleshooting tips.

8.2 LVDT Alignment, WY10 and WY20 Only

Aligning the LVDTs is critical. Turn the belt off, leave the Tecweigh 20 on and remove both side covers from the scale. The goal is to attain zero voltage across the test points on the signal conditioner. The LVDTs were aligned at the factory, but you need to verify that they are still aligned after shipping and installation. To verify alignment, connect a DC volt meter across the test points on the signal conditioner. If the voltage is between -0.1 and +0.1 VDC, your LVDTs are aligned sufficiently and you can move to the next section. If not, continue reading.

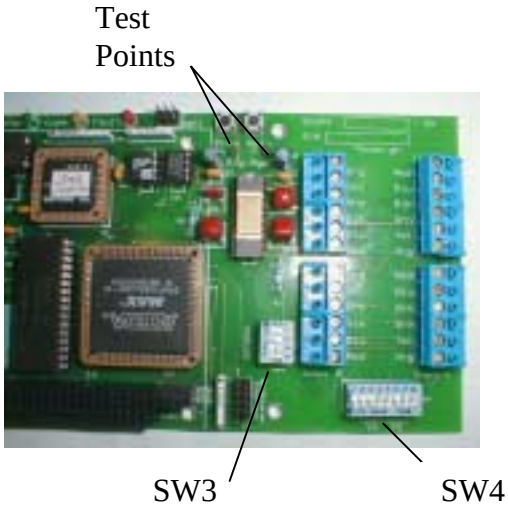

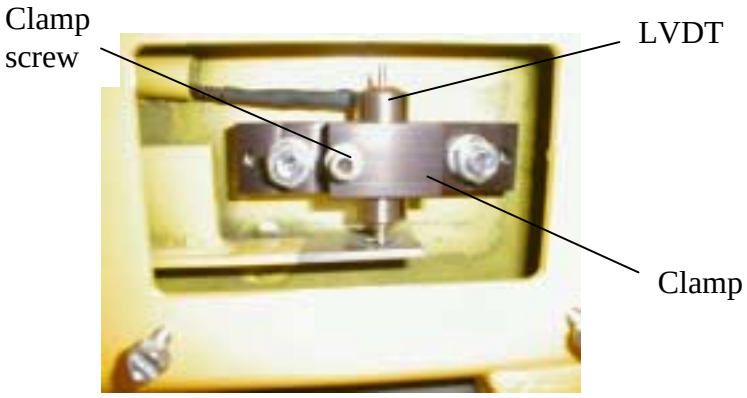

DIP switch SW3 is used to align the LVDTs one at a time. DIP switch SW4 is used to block the two unused LVDTs on WY10 and WY10 HD model scales. SW4 should be set once at the factory and then never changed--just verify positions. If your scale is a WY10 or WY10 HD, set SW4 positions 4, 5, 7 and 8 to ON. If your scale is a WY20, turn all SW4 positions OFF.
Now each LVDT will be aligned one at a time. On SW3, set positions 2, 3 and 4 to ON. This will enable LVDT A and disable B, C and D. Loosen the clamp screw slightly and slide the LVDT up or down as required until the volt meter reading is zero +/- 0.03 VDC. DO NOT

POUND ON THE LVDT! Now set position 2 OFF and adjust LVDT B until the voltage across the test points is zero +/- 0.03 VDC. Do the same for LVDTs C and D if your scale is a WY20. After alignment is complete, your switches should be set as follows:

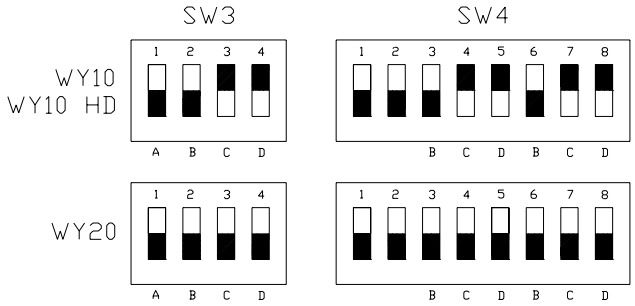

8.3 Calibrate Control Current Loop

This calibration is somewhat critical to accuracy of the FC20 control loop response. The idea here is to provide as much resolution as possible to the control loop. The Control Position display indicates the percentage of output to the process control device, a variable speed drive for example. It does not necessarily represent the percentage of 4-20 milliamps. In some applications only a 10 ma signal is needed to provide a full scale feed rate. This would mean that the Control Position should represent 0-10ma as 0 to 100 % output. If the full scale calibration is not completed, the FC20 may have problems maintaining Set Point. For example, if a 1 % change in Control Position causes a 10 % change in feed rate, the process would probably oscillate above and below set point. When scaled properly, the feed rate should directly follow the Control Position in a linear matter. Its obvious that there may never may a perfect relationship between Control Position and feed rate, but an operator should be make to at least try to get it as close as possible. The following demonstrates calibration of the Control Position.

SETTING THE LOW END OF THE CONTROL POSITION

The 4 ma may need adjustment in cases where the Control Position is at 00.0% but material feed is still present, or a dead band at the low end of the Control Position exists. The end result should mean 00.0% Control Position represents 00.0% material feed.

a). Set Rate Control to Manual position.
b). Press the CONTROL SET-UP key to open the menu.
c). Scroll forward to the “Min Output” mode and set it to 000.0 %
d). Press the EXIT key to return to normal control.
e). By using the decrease ARROW key, adjust the CONTROL P0SITION to 00.0
f). Press the INPUT OUTPUT menu key to open the menu.
g). Scroll forward to the “Ctl mA Zero” parameter and adjust its setting until material feed just barely starts or stops.
h). Press the EXIT key to return to normal control.

SETTING THE HIGH END OF THE CONTROL POSITION

The full scale calibration is required to develop a linear relationship between output (milliamps) and the Control Position. Once completed, there should be consistent response to feed rate throughout the entire Control Position range.

a). Set control mode to MANUAL position.
b). Press the CONTROL SET-UP key to open the menu.
c). Scroll forward to the “Max Output” mode and set it to 100.0 %
d). Press the EXIT key to return to normal control.
e). By using the increase ARROW key, adjust the CONTROL POSITION to 100.0
f). Press the INPUT OUTPUT key to open the menu.
g). Scroll forward to the “Ctl mA Span” parameter and adjust its setting until the feed rate is at full scale. Once at full scale then decrease the “Ctl mA Span” setting just until the feed rate decreases slightly. Full scale calibration is now complete.
h). Press the EXIT key to return to normal control, ready to run.

Note, when using a variable speed conveyor to maintain Set Point, the “min output” setting above should be returned to a value other than zero. Since the FC20 uses belt speed as part of its control delay, allowing the conveyor belt to completely stop will actually disable rate control. The “Min Output” is normally set to 10.0 % when conveyor belt speed is used to control Feed Rate.

8.4 Calibrate Belt Speed

With the conveyor on, enter the SCALE SET UP menu and scroll down to the Speed Spn parameter. Press and hold RESET TOTAL to display the speed measured by the FC20. Measure the belt speed using an electronic indicator or calculate it. Adjust the Speed Spn parameter up or down until the FC20 speed matches the measured (or calculated) speed.

To calculate the belt speed, pick a notable spot on the conveyor belt such as a splice and time how many minutes it takes for the spot to do one belt revolution. Using feet for English units or meters for metric, the following calculation will give you belt speed in feet or meters per minute.

Belt Speed = Belt length / Time for one revolution in minutes

To convert partial minutes to a decimal number, add the number of whole minutes to the number of seconds left over divided by 60. For example if it took 2 minutes and 12 seconds for one revolution:

2 + 12/60 = 2 + 0.2 = 2.2 Minutes

If you have a short belt (less than 50 feet) you may be able to attain a more accurate belt speed measurement by doing five revolutions. Time five revolutions of the belt and use the following calculation.

Belt Speed = 5 X Belt length / Time for 5 Revolutions in minutes

NOTE: Consult Section 11 if you are unable to calibrate the belt speed properly or if the speed value varies significantly while the belt is moving steadily.

8.5 Zero Calibration (AUTO ZERO)

The FC20 must calibrated to read zero with an empty belt (zero rate). Make sure the belt is empty and clean. With the conveyor running, press and hold the AUTO ZERO button for five seconds during which time the MODE display should read "hold to zero". After five seconds it should read "auto zero (wait)" The FC20 will do its AUTO ZERO for as many belt revolutions

as are specified in the Zero Revs parameter. Refer to Section 7.3 for details. You can cancel an AUTO ZERO at any time by pressing EXIT.

Once the AUTO ZERO and AUTO SPAN (see next section) is complete, the FC20 RATE WINDOW should read zero. If the MODE display reads “auto zero error” refer to Section 10 for troubleshooting tips. Note that the RATE may wander above and below zero to some extent. After calibration is complete, refer to Section 7.3 on AZT settings to eliminate the zero bounce.

8.6 Span Calibration (AUTO SPAN)

The FC20 must next be calibrated with a known weight (calibration weight) so it can determine the weight of the material as it passes over the weigh idler. While in Run Mode, press and hold the AUTO SPAN button for five seconds. The MODE window will read “Lower cal weight”. The Auto Span cycle will begin when the load of the calibration weight is sensed by the scale. See section 7.3, Span Detect parameter for more information. You can also press AUTO SPAN momentarily a second time to force the AUTO SPAN to begin. Once the calibration weight is in place, the MODE window should read “auto span (wait)”. The FC20 will do an AUTO SPAN for as many belt revolutions as are specified in the Span Revs parameter. You can cancel an AUTO SPAN at any time by pressing EXIT.

After the AUTO SPAN cycle is complete, the MODE window will read “raise cal weight”. Totalization will not resume until the calibration weight is lifted or the EXIT button is pressed momentarily. Remember to raise the cal weight to avoid false rate readings. NOTE: AN AUTO ZERO MUST BE PERFORMED BEFORE AN AUTO SPAN! An AUTO ZERO can be done to re-zero the belt, because of zero drift, without doing another AUTO SPAN. Zero drift may be caused by material build up, variation of belt tension or other changes in the environment surrounding the scale.

8.7 Pre/Post Test

Make sure the calibration weight is raised. Press and hold RESET TOTAL to clear the total on the display. Weigh an empty truck or container on a certified scale and prepare to fill it using the conveyor. Run a load of material into the truck or container. Try to run at your typical running rate, avoid trickle flow and overloading. Do not do this test in the rain as water weight will cause error in weighing the material. The total load size should be about 10% of the normal running rate (ex: normal rate = 450 TPH, test load = 45 tons).

Weigh the full truck or container and subtract the empty container weight leaving only the material weight. Enter the SCALE SET UP menu and go to the P/P Wt parameter. Enter the test material’s total weight. As you EXIT the menu, the FC20 will automatically compare your material test total to the total that it calculated and then modify the ASC parameter accordingly. Refer to Section 7.3 for more detailed information on P/P and ASC. P/P Wt is automatically set to zero after the test is done.

8.8 Running The System

Now the system should be ready to run. With the calibration weights up, the rate should be zero. Reset the total by holding the RESET button for five seconds. Begin running material on the belt. The rate should increase and the total should begin to increment. Press the DISPLAY key momentarily to toggle between the rate units of measure and the current belt speed. Turn the belt off and the "zero belt speed" message should be displayed. Resume running material and the zero belt speed message should disappear and the rate units or speed shown again.

Consult Section 10 for definitions of any messages you see in the MODE window. If the system is running properly, you can now begin to add and set up auxiliary equipment. Consult Section 4 if you have not wired your other equipment yet. Consult Section 9 for complete instructions on using the serial communication features.

Section Nine

Serial Communication

9.1 Overview

The FC20's RS232, RS422 and RS485 serial interfaces allows remote PLC's and computers to access rate, total, speed and status data in addition to performing basic calibration functions. The FC20 can be configured to either broadcast data automatically every second or send data manually upon request. If broadcasting data automatically, only one unit can be used per serial link. If requesting data manually, 16 units can be multi-dropped on one serial link and each unit will be identified using a capital letter A through P. Before continuing, make sure the devices are wired properly per Section 4 and make sure the serial communication related parameters are set properly per Section 7.7.

9.2 Automatic Transmission

The FC20 can transmit data automatically every second. Set the Command Menu parameter equal to the desired option in the table below. For example, set Command Menu=04 to continually transmit the rate and total every second.

Command Menu	Data Transmitted
01	Rate
02	Total
03	Speed
04	Rate, Total
05	Rate, Speed
06	Average rate
07	Average speed
08	Average rate, Total
09	Average rate, Average speed
10	Status
11	Rate, Status
12	Total, Status
13	Speed, Status
14	Rate, Status, Total
15	Rate, Status, Speed
16	Average rate, Status
17	Average speed, Status
18	Average rate, Status, Total
19	Average rate, Status, Average speed
20	Transmits rate in set point format [Station ID] [Ctrl S] [Rate] [CR]

Data sent from the FC20 (01 through 19) will be in the following format:

[Station ID] [Data Value(s)] [Carriage Return]

The station ID is a one byte ASCII character from A to P indicating the unit address as specified in the Station ID parameter. The rate, total and speed are in hex format as is the carriage return.

Status Byte: When status is sent it is a one byte ASCII character as defined below.

P	Positive rate (normal operation)
N	Negative rate
Z	Auto Zero in progress
T	Auto Zero in progress
S	Auto Span in progress
A	High/Low alarm condition
E	Weight processor error

Example 1: Unit K has a rate of 450 and Command Menu=01:

[Station ID]	K	(one character)
[Rate]	hex $30 $34 $35 $30	(four characters)
[Carriage Return]	hex $0D	(one character)

Example 2: Unit C has a speed of 375 and Command Menu=03:

[Station ID]	C	(one character)
[Speed]	hex $30 $33 $37 $35	(four characters)
[Carriage Return]	hex $0D	(one character)

Example 3: Unit A has a rate of 103.8, the total is 399.75 and Command Menu=14:

[Station ID]	A	(one character)
[Rate]	hex $31 $30 $33 $38	(four characters)
[Status]	P	(one character)
[Total Data]	hex $30 $30 $30 $33 $39 $39 $37 $35	(eight characters)
[Carriage Return]	hex $0D	(one character)

9.3 Manual Transmission

If the Command Menu parameter is set to 00, the FC20 sends data only after a request is made. The same data is available as outlined for automatic transmission and the data is sent in the same format. To request data, use following request format:

[Station ID] [Command Menu Option] [Carriage Return]

[Station ID]	ASCII A-P
[Two Character Command]	hex $30 $31 - $31 $39 (from Command Menu option list)
[Carriage Return]	hex $0D

The FC20 will return the data in the same format as it does for automatic transmission. Note that the FC20 has a 16 command input buffer.

9.4 Rate Control Commands

The FC20 Rate Control junctions may be controlled by the following:

[Station ID] [Command] [Carriage Return]

Command	Action
hex $33 $34	Sets Rate Control Mode to Off
hex $33 $34	Sets Rate Control Mode to Manual

hex $33 $35 Sets Rate Control Mode to Auto

Set Points may be received by the FC20 through serial communications:

Downloaded Set Point data must include all 4 digits. The first character is Station ID followed by an ASCII [ctrl-S]. The next 4 characters will be the actual Set Point, terminated by a carriage return.

Example, If the operator desires a Set Point of 25.0 while the Set Point display is indicating a decimal point of XXX.X he would:

station id	ctrl-S	set point	carriage return
ASCII A-P	hex $13	hex $30$32$35$30	hex $0D

9.5 Remote Calibration

There are four additional commands that can be sent to the FC20 for calibration. Note, no data is returned after calibration commands are sent. Use the following format to send calibration commands:

[Station ID] [Command] [Carriage Return]

Command	Action
hex $33 $30	Resets the Total display
hex $33 $31	Starts an Auto Zero Cycle
hex $33 $32	Starts an Auto Span Cycle
hex $33 $33	Cancels an Auto Zero or Auto Span Cycle

For example, to start an Auto Span cycle for unit G send the following command:

G hex $33 $32 hex $0D

Be careful not to send serial commands when there is someone working at the unit. Serial communication should only be done after the unit is completely set up, calibrated and in Run Mode. Sending commands while in Program Mode could cause conflicts and corrupt data. The FC20 ignores commands that it does not recognize and only detects a framing error.

Section Ten

Troubleshooting

10.1 Status Messages

On power up the FC20 performs a check on the memory chip and the chip that stores the "flash" parameters to assure no information has been corrupted. When this is complete one of the following messages will appear in the MODE window.

"Self Test – Ram pass"	OK, no changes have taken place
"RAM bad, FLASH restore"	RAM memory chip corrupt, the FC20 has restored the parameter table from flash memory
"RAM/FLASH bad, defaults"	Both RAM and flash memory corrupt, the FC20 has restored the parameter table from defaults.

There are many messages that may appear in the MODE window that indicate either a potential problem or give status information. Many of the messages were discussed as needed throughout the manual already. The following list expands on a few of those previous messages and also includes messages that were not yet discussed. It is assumed at this point that you understand how to use the key pad and navigate through the menus. Refer to Section 5 if not.

"auto zero error" and

"auto span error"

The Auto Zero and Auto Span error messages indicate an abnormal condition during calibration. Press the RESET button to clear the message and perform another Auto Zero. After a successful Auto Zero has been done, do another Auto Span. Possible causes of message:

- Rocks are jammed under the weigh idler
- Calibration weight is lowered for an Auto Zero when it should be raised
- Calibration weight is raised for an Auto Span when it should be lowered
- Conveyor has material running on it during calibration
- Load cell(s) damaged
- Belt skirting touches weigh idler or belt near scale
- Parameters for weigh span, cal weight, etc. are incorrect
- Load Count parameter does not increase when calibration weight is lowered

An AUTO ZERO must be done before an AUTO SPAN! If the Load Count parameter does not meet the criteria given then the load cell(s) may be damaged or there may be a problem with the SC100 signal conditioner. See Section 9.5 for load cell testing and replacement Note, if an AUTO ZERO or AUTO SPAN is started and then the is belt stopped, it will never complete the number of belt revolutions require. Press RESET to exit an AUTO ZERO or AUTO SPAN function.

"auto zero (wait)" and

"auto span (wait)"

These messages indicate that an AUTO ZERO or AUTO SPAN calibration is in progress. The messages will stay up until the cycles complete according to the Zero Revs and Span Revs parameters or until the EXIT button is pressed momentarily. An AUTO ZERO can be triggered by the AZT settings (See Section 7.3). Also, both AUTO ZERO and AUTO SPAN can be triggered remotely by another plant device over the serial link. Verify that the other plant device is operating as expected.

"framing error"

Indicates an incorrect Parity or Baud Rate parameter setting. Assure that all serial-related parameters are correct for your system--Station ID, Parity, Baud Rate and Command Menu (See Section 9). Also make sure your remote plant device is operating with the same settings.

"interlock open"

Terminals 3 and 10 must be jumpered for normal operation. If 3 and 10 are open, the rate, total and all outputs are disabled. Verify that there is a jumper between terminals 3 and 10 or check your field wiring diagram to determine if remote equipment may be controlling the interlock circuit.

"load error"

On the WY15 and WY25 this indicates an improper load cell signal or that weight on load cells exceeds capacity. Check the Load Count parameter and make sure the load counts increase when the calibration weight is lowered. See Section 10 for load cell testing and replacement if needed. Possible causes of the message:

- Broken or incorrectly wired terminals
- Loose terminal strip or terminal screws
- Load cell physically damaged
- Load cell has been overstressed
- Load cell wires are damaged
- Material or rocks jammed near load cell

On the WY10 and WY20 this indicates an improper LVDT signal. Check the Load Count parameter and make sure the load counts increase when the calibration weight is lowered. See Section 9.5 for a diagram of LVDT, testing procedure and replacement if needed. Possible causes of message:

- Broken or incorrectly wired terminals
- Loose terminal strip or terminal screws
- LVDTs are not aligned properly as outlined in Section 7.2
- LVDT spring is broken or off center
- LVDT center plunger stuck
- LVDT has created a pit in the surface of the deflection arm

"low power"

Low power indicates that there is insufficient power to the SC signal conditioner. Refer to Section 10 for more comprehensive electrical troubleshooting. Possible causes of the message:

- Power to the FC20 is less than 100 VAC
- The FC20 is not producing +24 VDC across terminals 10 and 29
- Signal wires to the SC are greater than 4000 feet
- Optional equipment such as chart recorders are drawing more than 1 amp total

- There is a break or short in the line between the scale and FC20

"scale data error"

Indicates a communication problem between the FC20 and the scale carriage. Refer to Section 10 for more comprehensive electrical troubleshooting. Possible causes of the message:

- Terminals 20 and 22 are wired backward
- FC20 is not producing +24 VDC across terminals 10 and 29
- Signal wires to the SC100 are greater than 4000 feet
- There is a break or short in the line between the scale and FC20

"self test"

This message appears when the unit is first powered up. The unit goes through a quick self-diagnostic routine and then the message disappears. This message also may appear if terminals are shorted out or if there is excessive power usage from an auxiliary device.

"zero belt speed"

Zero belt speed indicates that the belt is simply not moving, the speed sensor is not working properly or the signal conditioner has failed. If the message still appears even when the belt is moving, check for the following conditions:

- Speed sensor wheel does not turn freely
- Broken or shorted cable from speed sensor to SC100 signal conditioner
- Loose terminal connections

With the belt on, make sure the green LED labeled "speed" on the SC100 signal conditioner is blinking. Note, it may appear to be on solid if it is blinking quickly. If the LED is not on or the wheel does not spin freely, replace the speed sensor motor. Otherwise replace the SC100 signal conditioner.

"-----"

If the RATE or TOTAL window reads ----- then the rate or total values are too large to fit the display. Move the decimal position to the right using Rate DP or Total DP as outlined in section 7.3. The total will need to be reset once it reaches the upper limit.

10.2 Electrical Troubleshooting

This section provides methods of diagnosing lower level electrical problems. If you are installing the system for the first time, verify that all wiring is correct and that all terminal strips are securely set in place.

Tecweigh FC20's MP210 PCB

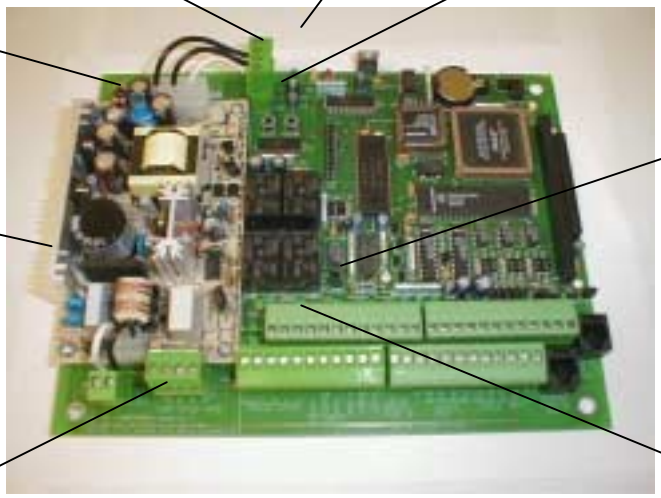

WY15 and WY25's SC100 PCB

Display does not light up…

Check the green and red LEDs on the FC20 main PCB (MP210). The green LED indicates sufficient power to the board. The red LED indicates board failure. If the green LED is off or the red LED is on, verify that the power supply is working properly. The power supply converts incoming 100-240vac power to +24 and +5 vdc. Verify that the input voltage is at least 100 vac and that there is +24 vdc and + 5 vdc coming out of the power supply.

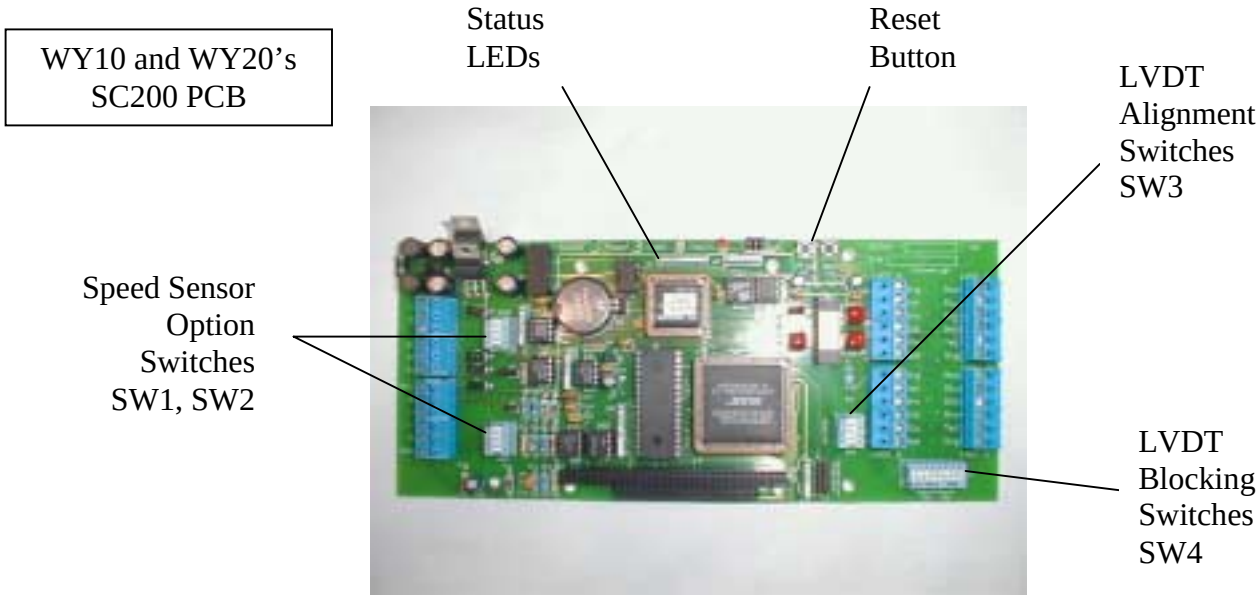

Scale communication failure…

The yellow LED on the FC20 main PCB blinks every 1/5th of a second during normal operation. If the yellow LED is off or blinks sporadically, verify there is +24 VDC across terminals 10 and 29. This is the supply power for the SC. If there is not +24 VDC across 10 and 29 replace the board. If there is +24 VDC, verify that there is also +24 VDC at the SC end. if not, replace the wiring between the FC20 and the SC. If there is +24 VDC at the SC, check the LEDs on the SC. The green LED indicates sufficient power to the PCB. The red LED indicates insufficient power or PCB failure. Like the FC20, the yellow LED on the signal SC blinks every 1/5th of a second during normal operation.

Other electrical problems…

Noise or electrical interference from other equipment such as variable frequency drives (VFDs) and large motors can interfere with the FC20. Ways to avoid electrical interference:

- Use dual twisted pair shielded cable from the FC20 to the SC (Beldon #1063A)
- Connect shield wires to the FC20 only. Not to the SC
- Do not mount the scale or FC20 near other equipment that are sources of noise
- Do not run wires near other equipment or sources of noise
- Never weld near or on the scale, this can destroy PCB's
- Always take static precautions when handling circuit boards
- Replace the circuit boards if not working properly after a lightning storm

Speed sensor options…

Low belt speed or high noise environments may require using some of the SC speed sensor options. Experiment with each one at a time to determine which combination allows the smoothest belt speed reading.

<u>SW1</u>

ShuntR — When ON it grounds out a portion of the voltage produced by the standard and heavy duty speed sensors. It will prevent damage by high voltages generated by fast speed belts. This must be on unless using a magnetic pickup, open collector or TTL speed sensor.

O.C.	Switch to ON if using an open collector speed sensor (adds a pull-up resistor).
Noise	If ON, cuts out low level electrical noise, but requires stronger speed sensor signal.
Filter	If ON, attempts to smooth the speed signal and ignore noise.

SW2

Pos1	If ON, multiplies the measured speed times 10. Try using this option if your belt speed is less than 15 feet per minute. You must recalibrate the speed per section 8.3.
Pos2	If ON, produces a fixed simulated speed for trouble shooting. The speed value on the FC20 will equal 200 X Speed Span parameter. Use this option to remove the speed sensor as a potential problem when troubleshooting.
Pos3	If ON, increases resistance to false belt speeds due to vibration. If ON, however, lower belt speeds (less than 20 feet per minute with standard speed sensor) may not be detected.
Pos4	Unused

10.3 Operation Troubleshooting

If your system is electrically okay, but it does not seem to be giving the correct rate or total, first verify that all the parameters are correct. Leaving Weigh Spn=0 or Belt Len=0, for example, will cause an erroneous calibration and the displayed rate will be incorrect. Here are some other conditions that may exist.

Rate is unsteady…

If the rate jumps by large amounts during relatively constant material flow, there are several possible problems. First check the belt speed and make sure that it is constant or at least does not deviate by more than about 1%. If the belt speed is not constant consult Section 10.2 for speed sensor options. Second, turn off the belt and look at the Load Count parameter. Make sure the load counts are higher with the calibration weight down than with the calibration weight up. Also, the load counts should not be negative and should remain relatively steady with the belt off and no vibration. Replace the load cells if load counts are inconsistent (section 10.5).

If the speed and load counts are constant, the rate should be constant unless the Auto Zero and Auto Span were not successful. Try doing an Auto Zero and Auto Span again and be sure to do the Auto Zero first. Other things to consider are the AZT setting and damping. Try disabling the AZT function. Then try increasing the Rate Damp parameter. See Section 7.3 for details on AZT and damping.

Ultimately, the WP20 should calculate the rate as follows:

Rate = Cal Factor * Scale Load (lbs) * Belt Speed (FPM) / Weigh Span (in)

Since the Cal Factor and Weigh Span do not change, the only possible problems with rate will be from the scale load and belt speed. By using the calibration weight to load the scale and simulated speed from the SC100 the rate should be steady. If the rate is still unsteady it is likely due to vibration or excessive electrical noise.

Scale is inaccurate…

First understand that no conveyor scale is 100% accurate. Every detail from installation through calibration contributes to overall accuracy. A very good installation on a newer conveyor in a noise and vibration free environment can attain an accuracy of +/- 0.5%. A sloppy installation on an old beat up portable conveyor may only attain +/- 3% accuracy. Based on that range of accuracy, estimate a realistic potential accuracy for your system and then proceed with finding sources of error.

Here are several potential problems that can lead to scale inaccuracy:

- Scale and weigh idler are not aligned properly (Section 3)
- Weigh idler rollers do not spin freely
- Speed sensor does not spin freely
- Scale is subject to high vibration near a crusher or screen
- Scale is mounted on an incline causing material to roll back and be weighed twice
- Load cells are damaged (Section 10.5)
- Conveyor belt has many splices, repairs and irregularities
- High temperature fluctuations cause scale, conveyor and belt deformation
- High winds cause fluctuations in weighing
- Rain increases the weight after the scale weighs it and before the truck is weighed
- Incorrect or invalid parameter settings (Section 7.3)
- Material on belt during calibration
- Material test was never performed (Section 8)
- Belt speed not calibrated properly
- Electrical interference causes false speed or load signal
- Parameters are incorrect (Section 7.3)

Try to eliminate as many undesirable conditions as possible. If you can verify that the rate is consistently high or low, adjust the ASC parameter up or down accordingly for fine tuning.

Parameter values cannot be edited…

After a power spike or lightening strike nearby, the parameter values can get scrambled. An indication of this happening is when one of the digits of the parameter cannot be changed. This damage is not repairable in the field.

Resetting the PCB…

If after trying other troubleshooting techniques the unit still does not perform the way you expect, press the reset button on the printed circuit board. See Section 10.2 for its location. This will check for corrupt data and recover parameters from flash memory if necessary. Also try completely disconnecting power and reconnecting it.

10.4 Auxiliary Equipment Troubleshooting

Display failure…

If the rate, speed and total do not correspond with the above values in Bench Test Mode or the button descriptions do not appear in the MODE display, there is problem which cannot likely be remedied in the field.

Relay failure…

There is an LED for each relay. When the relay is closed, the LED will illuminate. The relay's LEDs should come on regardless if there is any other device connected to them. You should also

be able to hear the relays make a clicking sound as they open and close. If you find that any of the above conditions do not exist, replace the PCB. If the relays seem to be working properly in Simulation mode, but do not work when running as normal, consider how realistic the relay parameters are set at (see Section 7.3 for details). The most common problem when using the TPR function is trying to make the relay open and close too frequently which will cause it to stick open or closed. The most common problem when using the relays for rate or speed alarms is that the limits are not realistic which causes the alarm condition to never exist or exist constantly. Also check the relay delay as the alarm condition must exist for the time of the delay before closing the relay.

Rate current loop…

The rate current loop requires no calibration and is driven solely by the Base mA and Rate 20mA parameters (see Section 9.3 for details). Verify the Base mA and Rate 20mA parameters. Place a meter in line with the device using the current loop. If the output current still does not fluctuate with rate during normal operation or is not a constant 20 mA in Bench Test Mode, replace the PCB.

HFR failure…

The High Frequency Rate output requires no calibration. It should send a square wave signal with a frequency equal to 10 times the calculated rate and a pulse width equal to half of one cycle. The HFR signal has its own damping factor which is independent of the displayed rate so the HFR rate and displayed rate may not agree.

Other problems…

The outputs may be disabled or not operate as expected when the Interlock is open, during an Auto Zero or Auto Span or while the unit is in Program Mode. If you find the FC20 is operating normally, but your remote device is not, consult the manufacturer of that device.

10.5 Load Cell Testing / Replacement, WY15 and WY25 Only

Use the following method to test your load cells. Disconnect the green load cell connectors from the SC100. With an ohm meter, verify the following load cell resistance values. If even one resistance value is incorrect, replace the load cell.

Red-Black	350 Ohms
Red-Green	280 Ohms
Red-White	280 Ohms
Black-White	280 Ohms
Black-Green	280 Ohms
Green-White	350 Ohms

If load cell replacement is necessary, be sure to re-assemble the unit exactly the way it was taken apart. Especially take note of the swivel washers. The contoured faces of these washers fit together and the flat faces are on top and bottom. The safety latch is only used during transportation and installation. It should not be in place during normal use.

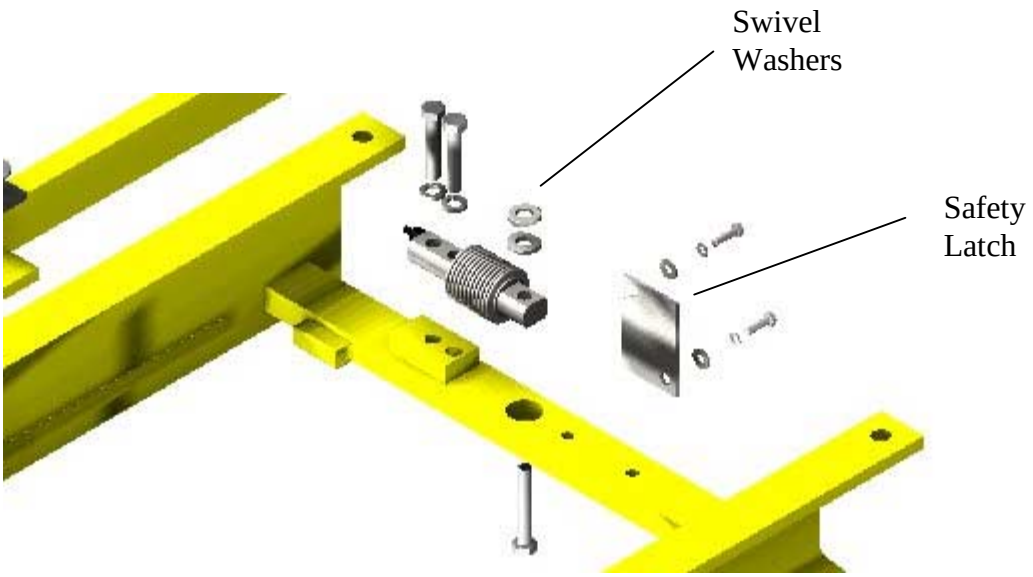

9.5 LVDT Testing and Replacement, WY10 and WY20 Only

Use the following method to test your LVDTs. Stop the conveyor and disconnect power from the FC20. Remove the side cover on the scale carriage to allow access to the signal conditioner. Remove each LVDT terminal strip one at a time and use an ohm meter to measure the resistance between the following terminals. If a resistance is not within 20 % of the listed value below, replace that LVDT. Replace each terminal after testing.

ORG - YEL = 70 Ω

GRN - BLK = 100 Ω

BLU - RED = 100 Ω

If necessary, follow these instructions to replace a bad LVDT. Remove LVDT wiring from terminals on the signal conditioner. Remove the two bolts from the LVDT clamp. Remove the LVDT assembly from the carriage. Loosen the clamp screw and slide the LVDT out of the clamp. Install the new LVDT in approximately the same position, and assemble in reverse order. Re-wire to the signal conditioner terminal strip and be careful to keep the wiring away from the deflection arm. Refer to Section 8.2 for LVDT alignment and re-calibration of the scale.

11.1 WY15 Dimensions

WY15

MODEL NUMBER	BELT WIDTH	MTG HOLES "A"	IDLER MTG "B"	BETWEEN RAILS "C" MINIMUM
WY15-18	18"	27.00	14.00	23.00
WY15-24	24"	33.00	20.00	29.00
WY15-30	30"	39.00	26.00	35.00
WY15-36	36"	45.00	32.00	41.00
WY15-42	42"	51.00	38.00	47.00
WY15-48	48"	57.00	44.00	53.00
WY15-54	54"	63.00	50.00	59.00
WY15-60	60"	69.00	56.00	65.00

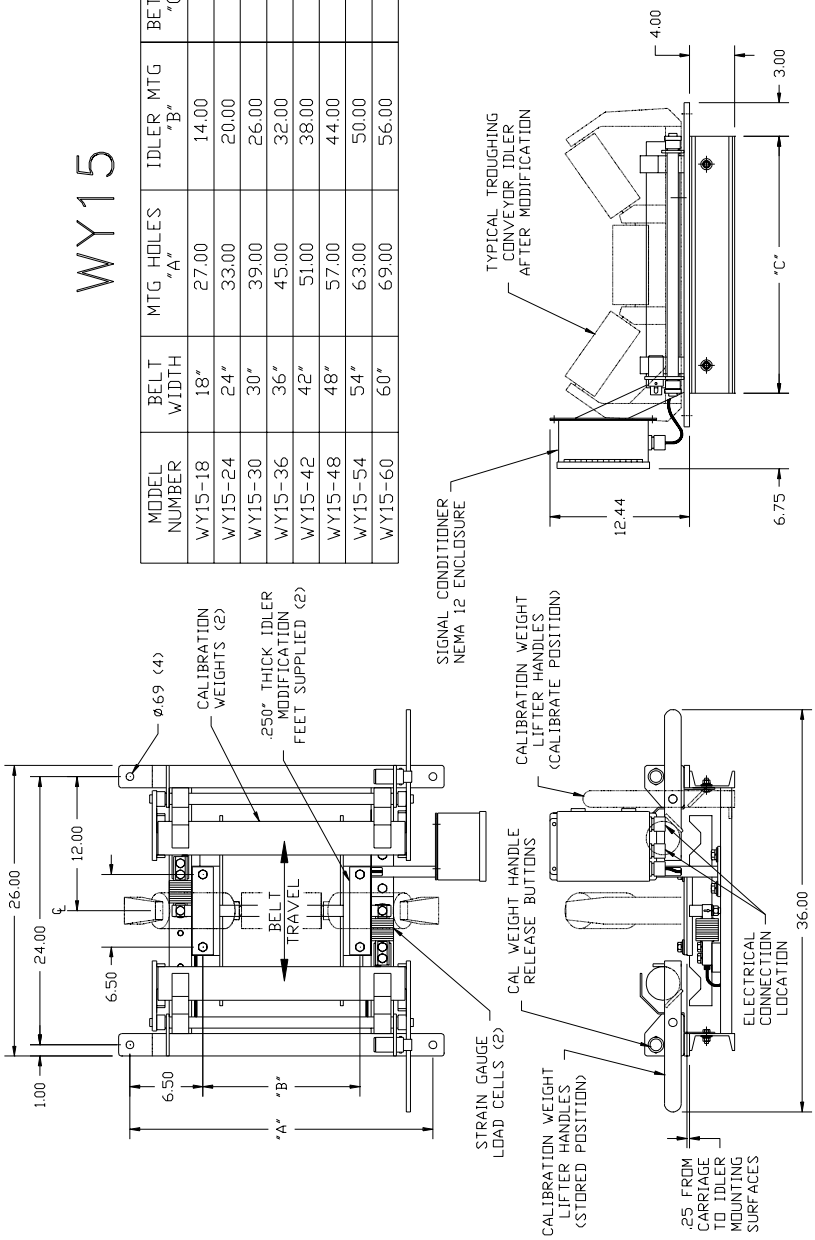

11.2 WY25 Dimensions

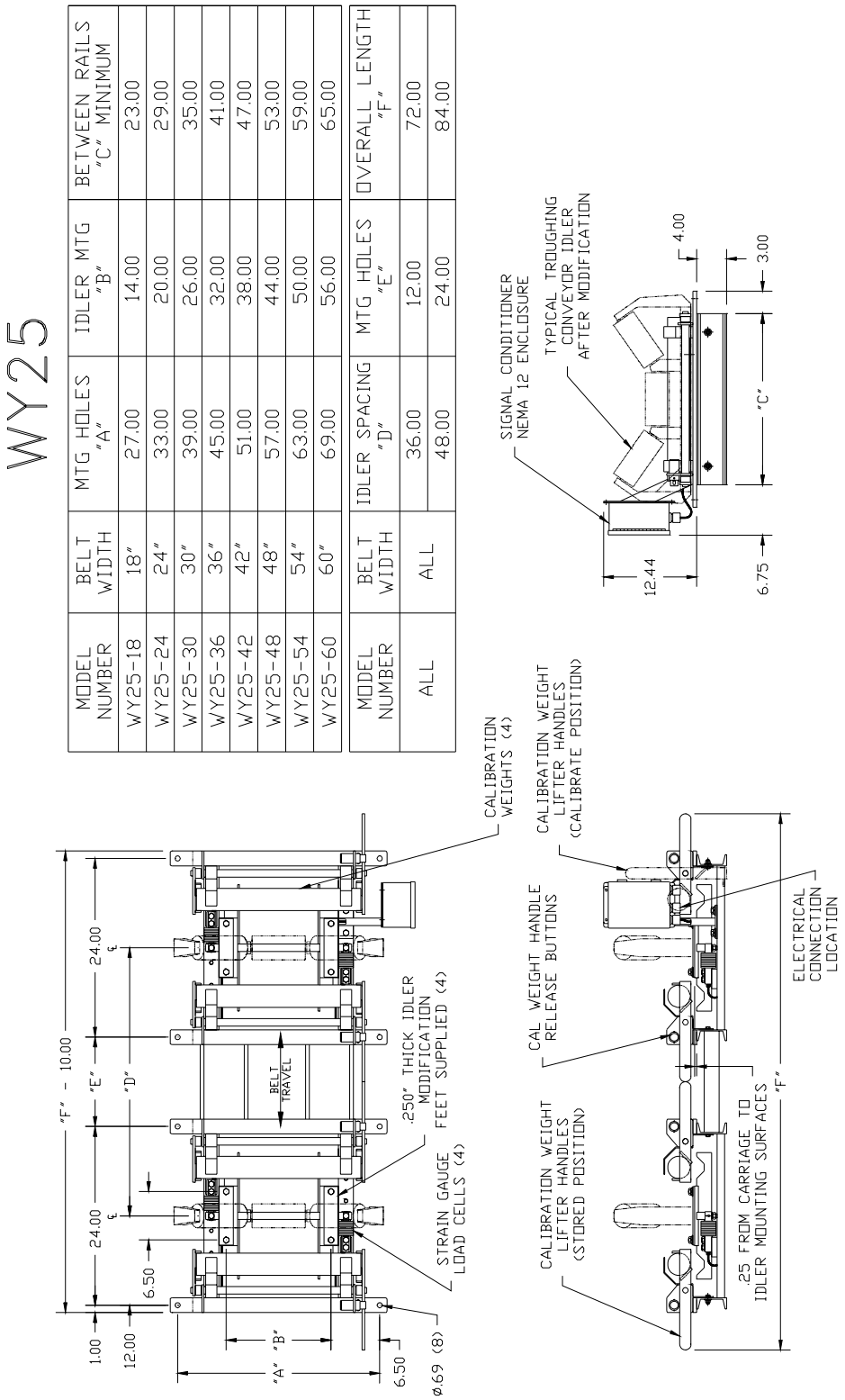

MODEL NUMBER	BELT WIDTH	MTG HOLES "A"	IDLER MTG "B"	BETWEEN RAILS "C" MINIMUM
WY25-18	18"	27.00	14.00	23.00
WY25-24	24"	33.00	20.00	29.00
WY25-30	30"	39.00	26.00	35.00
WY25-36	36"	45.00	32.00	41.00
WY25-42	42"	51.00	38.00	47.00
WY25-48	48"	57.00	44.00	53.00
WY25-54	54"	63.00	50.00	59.00
WY25-60	60"	69.00	56.00	65.00

MODEL NUMBER	BELT WIDTH	IDLER SPACING "D"	MTG HOLES "E"	OVERALL LENGTH "F"
ALL	ALL	36.00	12.00	72.00
		48.00	24.00	84.00

11.3 WY10 Dimensions

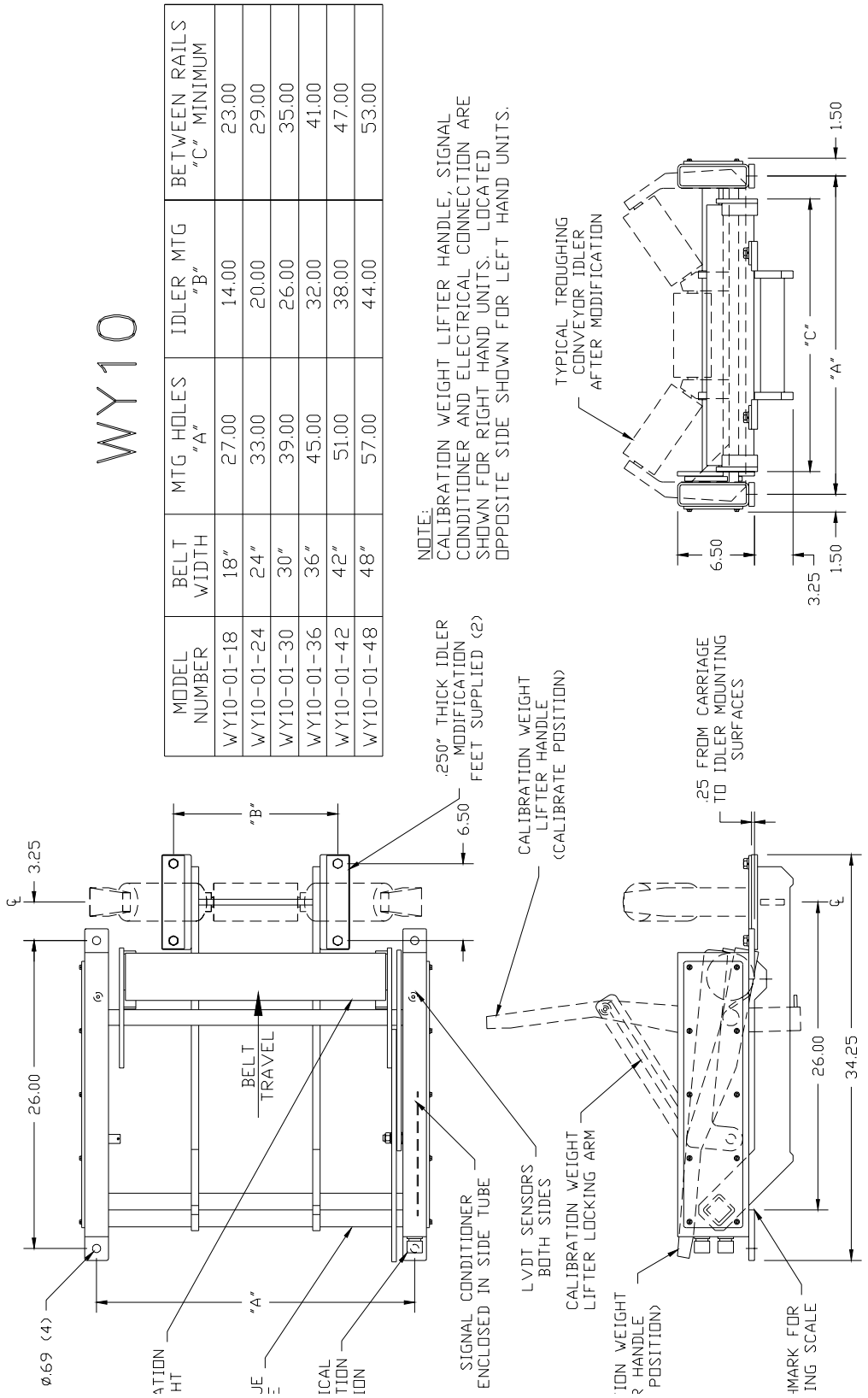

MODEL NUMBER	BELT WIDTH	MTG HOLES "A"	IDLER MTG "B"	BETWEEN RAILS "C" MINIMUM
WY10-01-18	18"	27.00	14.00	23.00
WY10-01-24	24"	33.00	20.00	29.00
WY10-01-30	30"	39.00	26.00	35.00
WY10-01-36	36"	45.00	32.00	41.00
WY10-01-42	42"	51.00	38.00	47.00
WY10-01-48	48"	57.00	44.00	53.00

11.4 WY10 HD Dimensions (Heavy Duty)

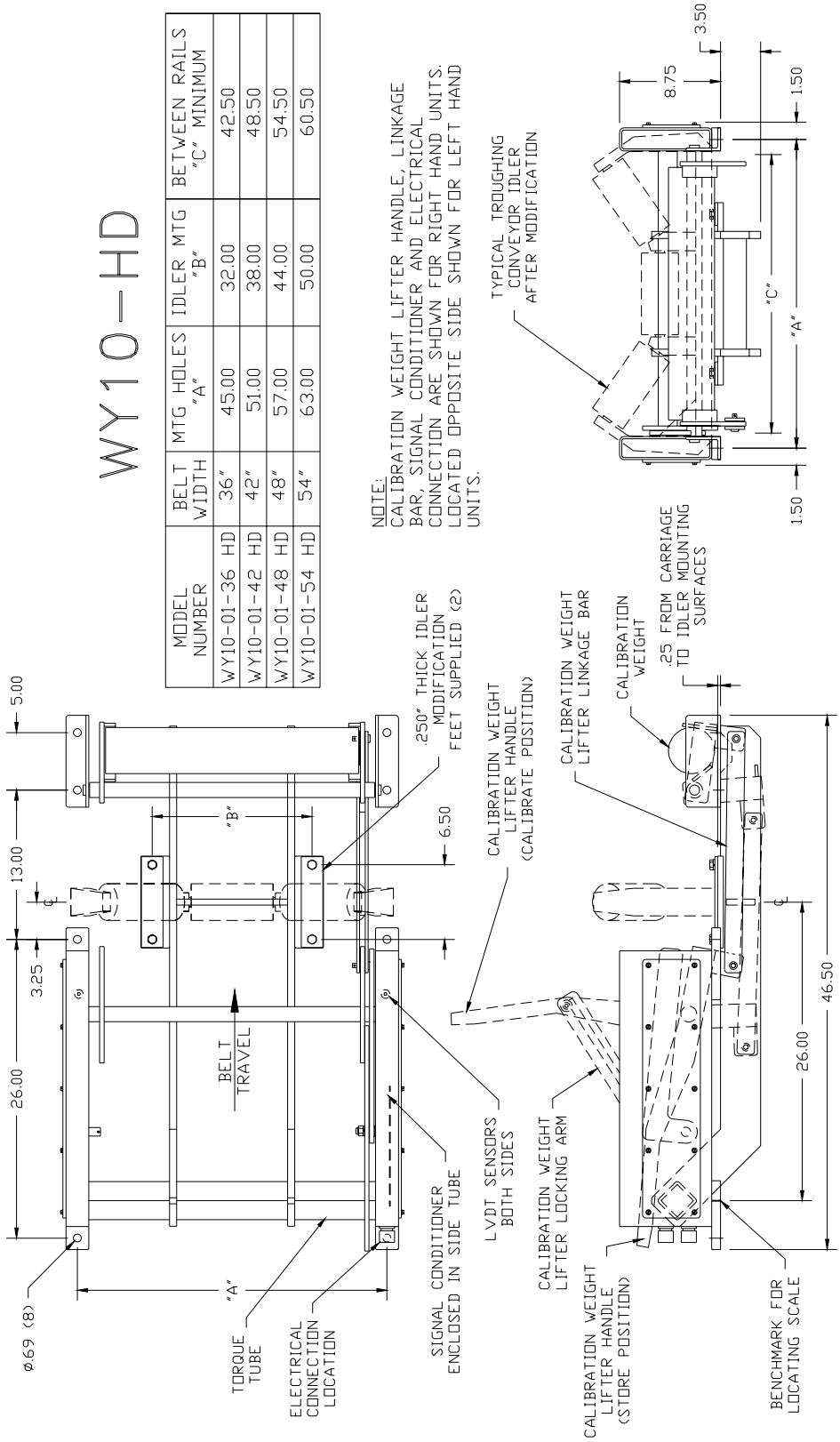

11.5 WY20 Dimensions

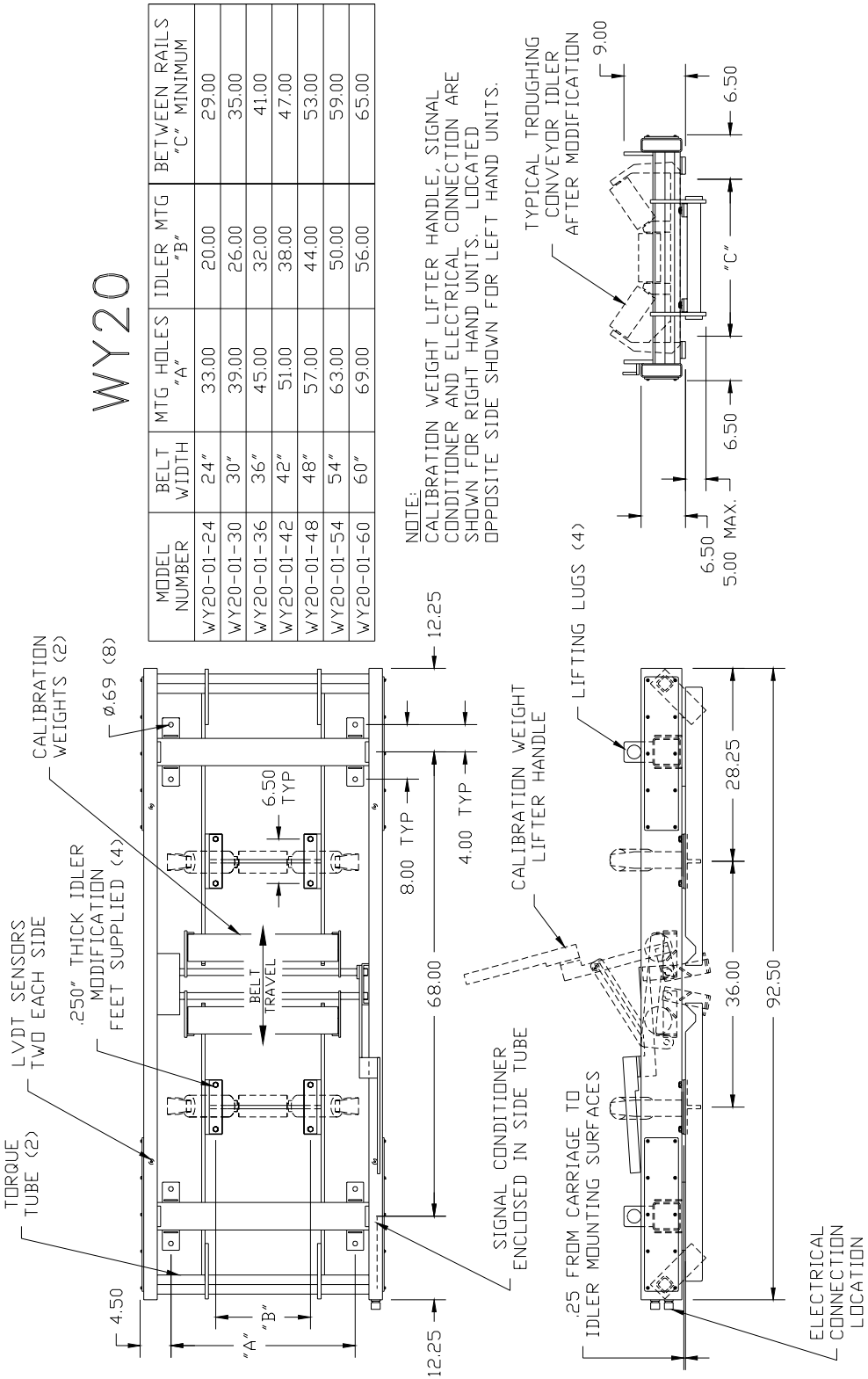

MODEL NUMBER	BELT WIDTH	MTG HOLES "A"	IDLER MTG "B"	BETWEEN RAILS "C" MINIMUM
WY20-01-24	24"	33.00	20.00	29.00
WY20-01-30	30"	39.00	26.00	35.00
WY20-01-36	36"	45.00	32.00	41.00
WY20-01-42	42"	51.00	38.00	47.00
WY20-01-48	48"	57.00	44.00	53.00
WY20-01-54	54"	63.00	50.00	59.00
WY20-01-60	60"	69.00	56.00	65.00

WARRANTY & SERVICE POLICY

CONVEYOR SCALES &

WEIGH BELT FEEDERS

Statement of Limited Warranty – Tecnetics Industries, Inc.

Tecnetics Industries, Inc., Warrants this equipment against faulty components or factory defects, for a period of five (5) years beginning on the date of shipment/invoice. (Speed sensors and load cells) shall have a warranty of one (1) year. During the warranty period, any defect will be repaired or replaced without charge, providing that the equipment is returned, pre-paid and undamaged to **TECNETICS'** factory. When on site repair or replacement is required, a **Tecnetics** authorized distributor or technician can be hired to diagnose and make necessary repairs. The Warranty will cover affected parts but exclude travel and labor expenses.

Terms and Conditions of Limited Warranty

Accuracy of the device may be limited by poor installation, faulty or improper conveyor equipment on which the scale is to be placed, or improper calibration methods. Warranty is therefore limited to those installations having the approval of **TECNETICS** or an authorized **TECNETICS REPRESENTATIVE**. This exclusive warranty is limited to the original user, and no other express or implied warranties shall apply. Excluded from the warranty are normal wear and tear, removal or installation of warranty parts, freight, physical abuse, or buyer caused damage including, but not limited to, such things as overloading of the system, change in belt speed, or damage resulting from over-voltage, lightning, or water entry.

WARRANTY IS EXCLUSIVE AND IN LIEU OF ALL OTHER EXPRESS AND IMPLIED WARRANTIES WHATSOEVER, INCLUDING, BUT NOT LIMITED TO, IMPLIED WARRANTIES OR MERCHANTABILITY AND FITNESS FOR A PARTICULAR PURPOSE.

Tecnetics Industries, Inc., shall not be liable for damage to equipment, property or person due to improper installation or through attempts to utilize the goods under conditions that exceed the designated capabilities. It is the user's responsibility to determine the suitability of the equipment to his needs. Various State and Local agencies may require certain certification procedures relative to the use of this equipment. **Tecnetics** makes no assurance that this device fulfills those criteria beyond this warranty based on data sheets received from the buyer. **Tecnetics** Industries, Inc. specifically disclaims any consequential liability arising from the use of this product; maximum liability is limited to the original purchase price.

11.7 Factory Set-Up Sheet

Job Number: _____

Customer: _____

FC20 Controller: Model: _____ , S/N:_____

Signal Conditioner: Model: _____ , S/N:_____

Scale Carriage: Model: _____ , Carriage number: _____

Date Shipped: _____ , Set-up by: _____

PRELIMINARY DATA: (order information)

Unit of measurement: _____

Feed Rate: _____ min, _____ avg, _____ max.

Belt Speed: _____ min, _____ avg, _____ max.

Belt Width: _____ , Belt Length: _____

Scale Carriage: Size: _____ , Style: _____

Factory Idler Mod: _____ , Offset Idler: _____

Speed Sensor: Model: _____ , Style: _____

FC20 supply voltage: _____

FC20 milliamp rate output: _____

SPECIAL _____

_____

_____

_____

_____

_____

_____

_____

	Parameter	Description	Parameter Settings		
Scale Set-Up Menu			**Default**	**Factory**	**Field**
1)	Units	Selects units of measure	Tons/Hr		
2)	Cal Factor	Calibration value for a given scale type, See Appendix	0.36		
3)	Cal Wt	Calibration weight value (lbs, kg)	120.00		
4)	Cal Chn	Calibration chain (lbs/ft, kg/m)	0000.0		
5)	Wgh Span	Weigh span length (in, m)	042.00		
6)	Belt Len	Belt length (ft, m)	0050.0		
7)	P/P Wt	Material test weight	0000.0	0	
8)	AZT +/-	Auto Zero Tracking rate	000.0	0	
9)	Trck Revs	Number of belt revolutions used by AZT	00.0	0	
10)	Zero Revs	Number of belt revolutions used by Auto Zero	01.0	1	
11)	Span Revs	Number of belt revolutions used by Auto Span	01.0	1	
12)	Rate DP	Rate display decimal point setting	ONES	ONES	
13)	Rate Damp	Rate display damping factor	045	15	
14)	Speed DP	Speed display decimal point setting	ONES	ONES	
15)	Speed Damp	Speed display damping factor	15	15	
16)	Speed Spn	Speed calibration span	1.8800		
17)	Total DP	Total display decimal point setting	ONES	ONES	
18)	Down Count	Allow negative rates to be deducted from the total	NO		
19)	ASC	Auto Span Correction factor	1.0000	1	
20)	Load Counts	Live load counts being indicated by Signal Conditioner	reference		
21)	Zero Counts	Load count selected during Auto Zero to represent Zero	00000		
22)	Span Counts	Load count selected during Auto Span to represent Span	00000		
23)	Span Detect	Change in load counts required to initiate Auto Span	0050		
Control Set-Up Menu					
24)	Feed to Scale	Feed to scale distance (ft/m)	000.00		
25)	Sample Time	controller sample time (seconds)	10		
26)	Min Output	minimum control output	010.0		
27)	Max Output	maximum control output	100.0		
28)	Alarm Output	Alarm output control position setting	000.0		
29)	Setpoint Type	Selects set point type, local or remote	LOCAL		
30)	Remote Set Pnt	Selects remote set point type, analog or digital	ANALOG		
31)	Setpoint Zero	Sets the low set point range	0000		
32)	Setpoint Span	Sets the high set point range	1000.0		
33)	Start Ctl Pos	Sets the default contol position for low rates	000		
34)	Ctl Above Rate	Set the rate at which the processor initiates PID functions	000.0		
Input Output Menu					
35)	Simulation	Provides artificial rate for calibrating other equipment	OFF	OFF	
36)	Sim Rate	Artificial rate shown when Simulation is YES	1000.0	0	
37)	Ctl mA Zero	Sets the low control position range	04.0		
38)	Ctl mA Span	Set the high control position range	19.1		
39)	Rate Base mA	Current output at rate of zero	4.00	0	
40)	Rate at 20mA	Rate at 20 ma current output	1000.0	0	

Input Output Menu (cont.)

			Default	Factory	Field
40)	Rate at 20mA	Rate at 20 ma current output	1000.0	0	
41)	Rate mA LTrim	Trims the low mA rate output	150		
42)	Rate mA HTrim	Trims the high mA rate output	50		
43)	Rate mA Damp	Current output damping factor	15	15	
44)	HFR Damp	High Frequency Rate output damping factor	15	15	
45)	RLY 1 Func	Relay 1 output function	TPR	TPR	
46)	RLY 1 Pls	Relay 1 pulse duration (seconds)	0.10	0	
47)	RLY 1 TS	Relay 1 totalizer scale	0000	0	
48)	RLY 1 Set Pnt	Relay 1 set point type, direct or percent	DIRECT		
49)	RLY 1 Low	Relay 1 low rate alarm setpoint	0000	0	
50)	RLY 1 High	Relay 1 high rate alarm setpoint	0000	0	
51)	RLY 1 Delay	Relay 1 delay before alarm output (seconds)	000	0	
52)	RLY 2 Func	Relay 2 output function	TPR	TPR	
53)	RLY 2 Pls	Relay 2 pulse duration (seconds)	0.10	0	
54)	RLY 2 TS	Relay 2 totalizer scale	0000	0	
55)	RLY 2 Set Pnt	Relay 2 set point type, direct or percent	DIRECT		
56)	RLY 2 Low	Relay 2 low rate alarm setpoint	0000	0	
57)	RLY 2 High	Relay 2 high rate alarm setpoint	0000	0	
58)	RLY 2 Delay	Relay 2 delay before alarm output (seconds)	000	0	
59)	RLY 3 Func	Run interlock relay, not editable	RUN	RUN	RUN
60)	T1 func	Sets T1 digital input function	TOTAL		
61)	T3 func	Sets T3 digital input function	AUTO ENABLE		
62)	T3 delay	Sets T3 function delay (seconds)	000		

Tuning Menu

63)	Tuning	Selects auto (default) or manual tuning	AUTO		
64)	Proportional	Sets proportional gain for PID functions	1.0000		
65)	Integral	Sets integral gain for PID functions	0.1000		
66)	Derivative	Sets derivative gain for PID functions	0.0050		

Serial Port Menu

67)	Station ID	WP20 serial interface station ID character	A	A	
68)	Parity	Serial port parity type	NONE	NONE	
69)	Baud Rate	Serial port baud rate	9600	9600	
70)	Command Menu	Serial port transmitter menu	00	00	

Set Point Menu

71)	Setpoint	Selects local rate control target setpoint	0000		

Security Menu

72)	Lock Aut Zr	Locks or unlocks the AUTO ZERO button	NO	NO	
73)	Lock Aut Sp	Locks or unlocks the AUTO SPAN button	NO	NO	
74)	Lock Reset	Locks or unlocks the RESET button	NO	NO	
75)	Lock Rate Cntl	Locks or unlocks the RESET button	NO	NO	
76)	Lock Set Point	Locks or unlocks the RESET button	NO	NO	
77)	Lock Code	Security passcode	00000	00000	
78)	Save Params	Saves parameters to flash memory	NO	NO	