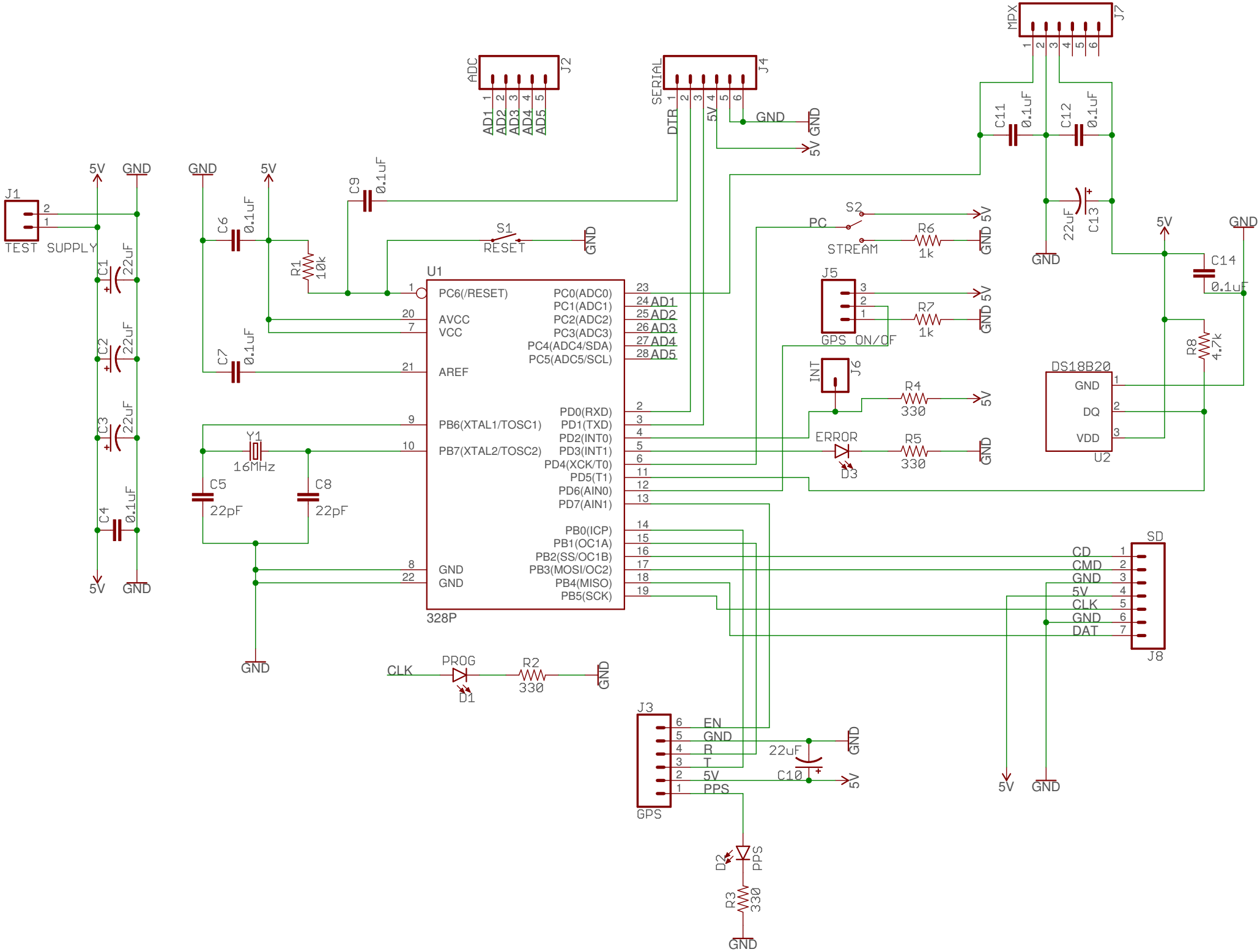
J1
TEST SUPPLY
5V
GND
C1 22uF
C2 22uF
C3 22uF
C4 0.1uF
C6 0.1uF
C7 0.1uF
R1 10k
C9 0.1uF
S1
RESET
U1
PC6(/RESET)
AVCC
VCC
AREF
PB6(XTAL1/TOSC1)
PB7(XTAL2/TOSC2)
GND
GND
PC0(ADC0)
PC1(ADC1)
PC2(ADC2)
PC3(ADC3)
PC4(ADC4/SDA)
PC5(ADC5/SCL)
PD0(RXD)
PD1(TXD)
PD2(INT0)
PD3(INT1)
PD4(XCK/T0)
PD5(T1)
PD6(AIN0)
PD7(AIN1)
PB0(ICP)
PB1(OC1A)
PB2(SS/OC1B)
PB3(MOSI/OC2)
PB4(MISO)
PB5(SCK)
328P
Y1
16MHz
C5 22pF
C8 22pF
ADC
J2
AD1
AD2
AD3
AD4
AD5
SERIAL
J4
DTR
5V
GND
CLK
PROG
D1
R2 330
J3
GPS
EN
GND
R
T
5V
PPS
22uF
C10
D2
PPS
R3 330
MPX
J7
C11 0.1uF
C12 0.1uF
22uF
C13
S2
PC
STREAM
R6 1k
J5
GPS ON/OF
R7 1k
INT
J6
R4 330
ERROR
D3
R5 330
C14 0.1uF
R8 4.7k
DS18B20
U2
DQ
VDD
SD
J8
CD
CMD
CLK
DAT

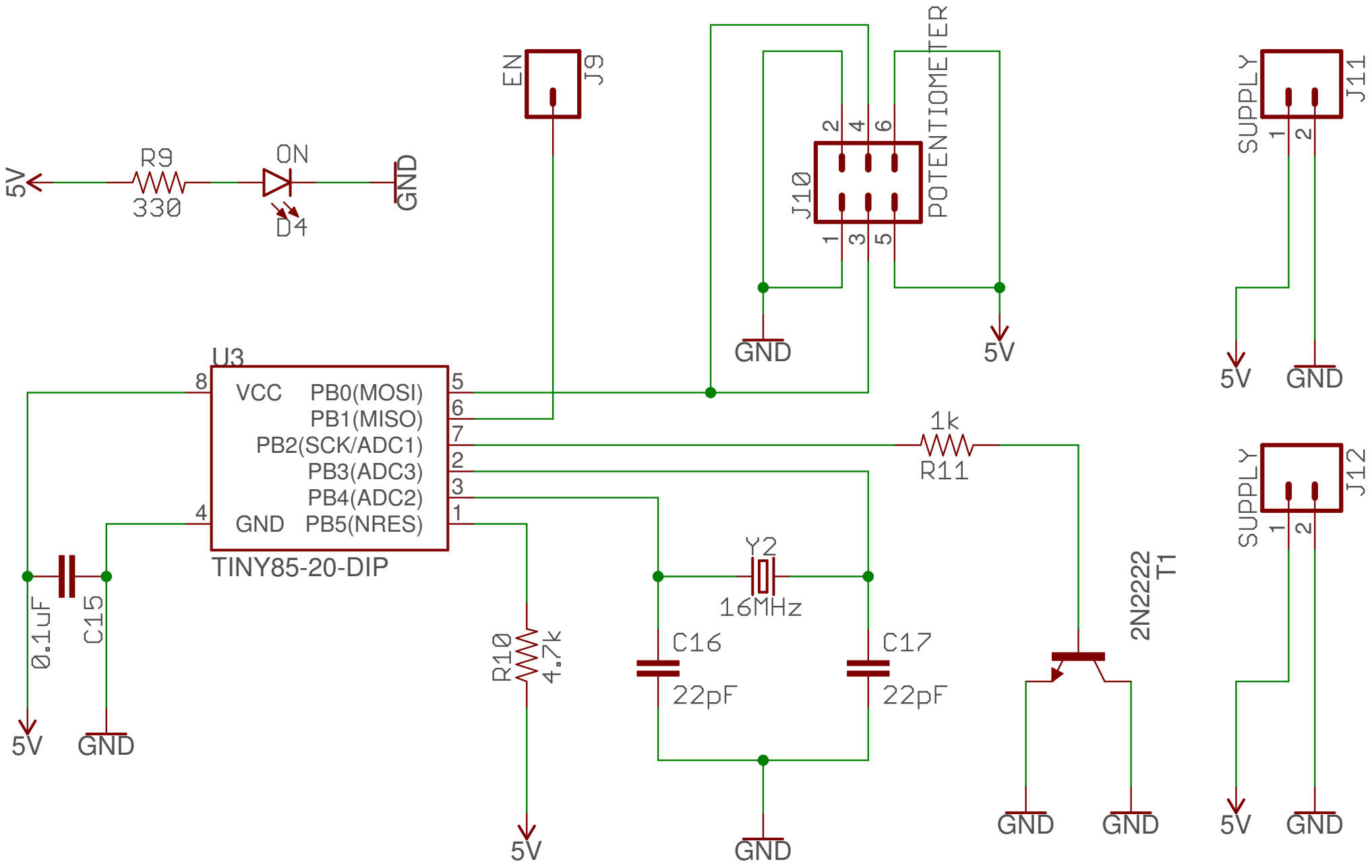
5V
R9
330
ON
D4
GND
EN
J9
J10
POTENTIOMETER
2
4
6
1
3
5
GND
5V
SUPPLY
J11
1
2
5V
GND
U3
8
VCC
PB0(MOSI)
PB1(MISO)
PB2(SCK/ADC1)
PB3(ADC3)
PB4(ADC2)
GND
PB5(NRES)
5
6
7
2
3
1
4
TINY85-20-DIP
1k
R11
SUPPLY
J12
1
2
0.1uF
C15
5V
GND
R10
4.7k
5V
Y2
16MHz
C16
22pF
C17
22pF
GND
2N2222
T1
GND
GND
5V
GND

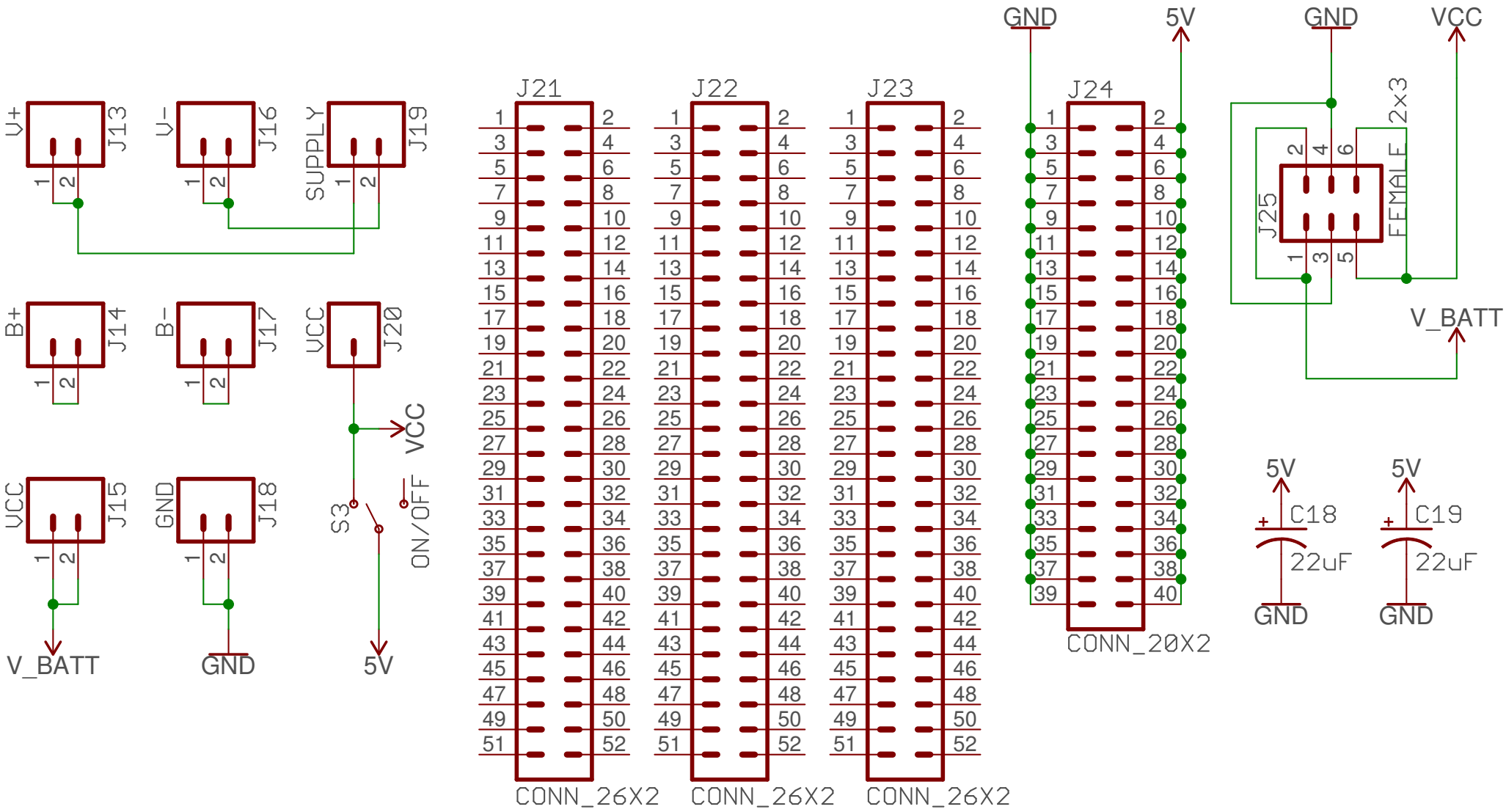
U+
J13
U-
J16
SUPPLY
J19
B+
J14
B-
J17
VCC
J20
VCC
J15
GND
J18
S3
ON/OFF
VCC
V_BATT
GND
5V
J21
J22
J23
J24
CONN_26X2
CONN_26X2
CONN_26X2
CONN_20X2
GND
5V
GND
VCC
J25
2x3
FEMALE
V_BATT
5V
C18
22uF
GND
5V
C19
22uF
GND

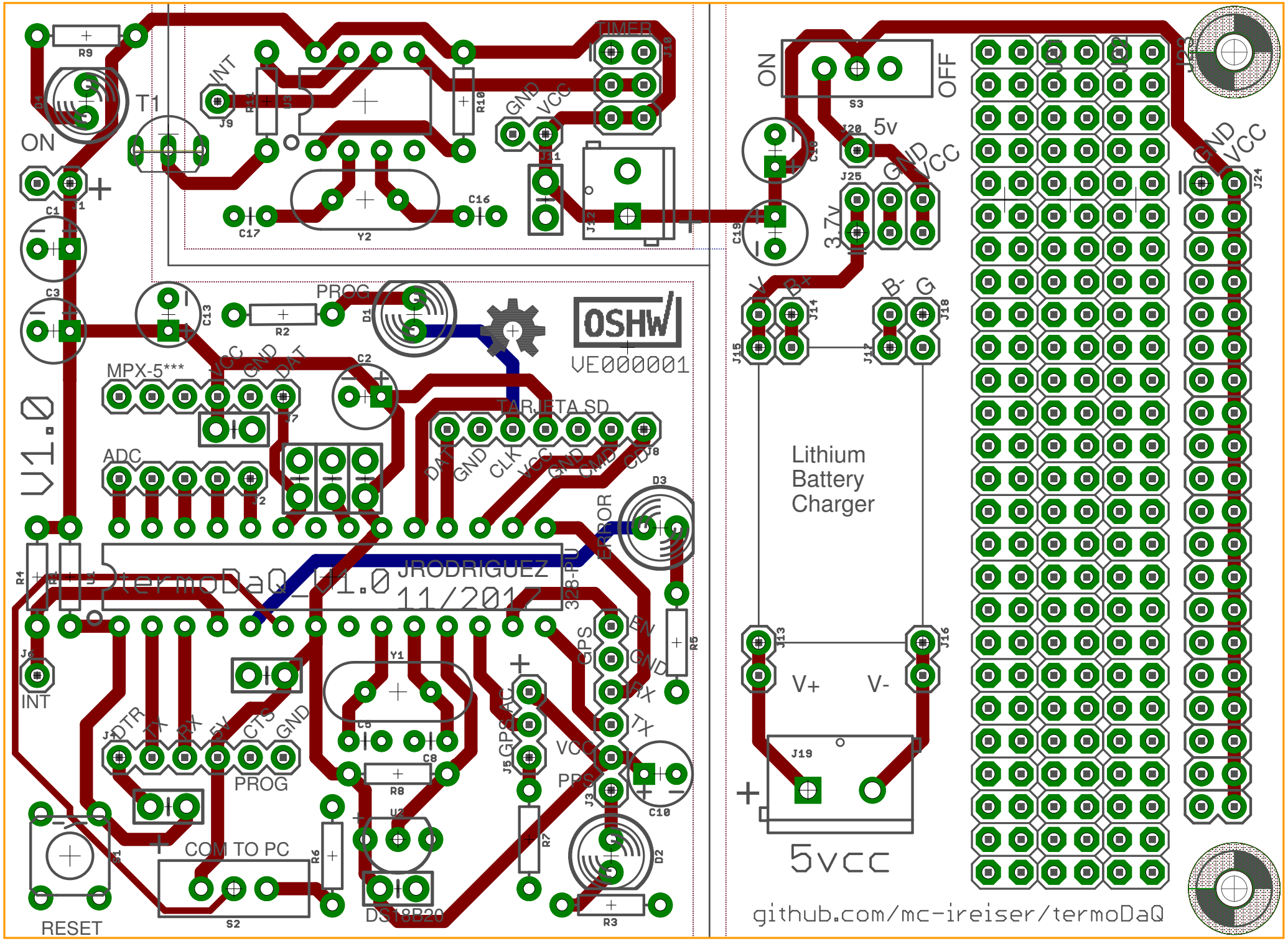
ON
T1
INT
J9
R9
R24
U3
R10
TIMER
J10
GND
VCC
R11
J12
C16
C17
Y2
C1
J1
C3
C13
R2
PROG
D1
OSHW
VE000001
MPX-5***
VCC
GND
DAT
C2
R7
TARJETA SD
DAT
GND
CLK
VCC
GND
CMD
CD
J8
ADC
J2
D3
ERROR
R4
R1
U1
TermoDaQ_v1.0
JRODRIGUEZ
11/201
328-PU
J6
INT
Y1
C5
C8
R8
J4
DTR
TX
RX
5V
CTS
GND
PROG
J5
GPS
AC
VCC
PRS
J3
GPS
5V
GND
RX
TX
R5
C10
D2
R3
R7
U2
DS18B20
R6
COM TO PC
S2
S1
RESET
V1.0
ON
OFF
S3
C18
J20
5v
J25
GND
VCC
3.7v
C19
V
B+
J14
J15
B-
G
J18
J17
Lithium
Battery
Charger
J13
J16
V+
V-
J19
5vcc
GND
VCC
J24
J23
github.com/mc-ireiser/termoDaQ