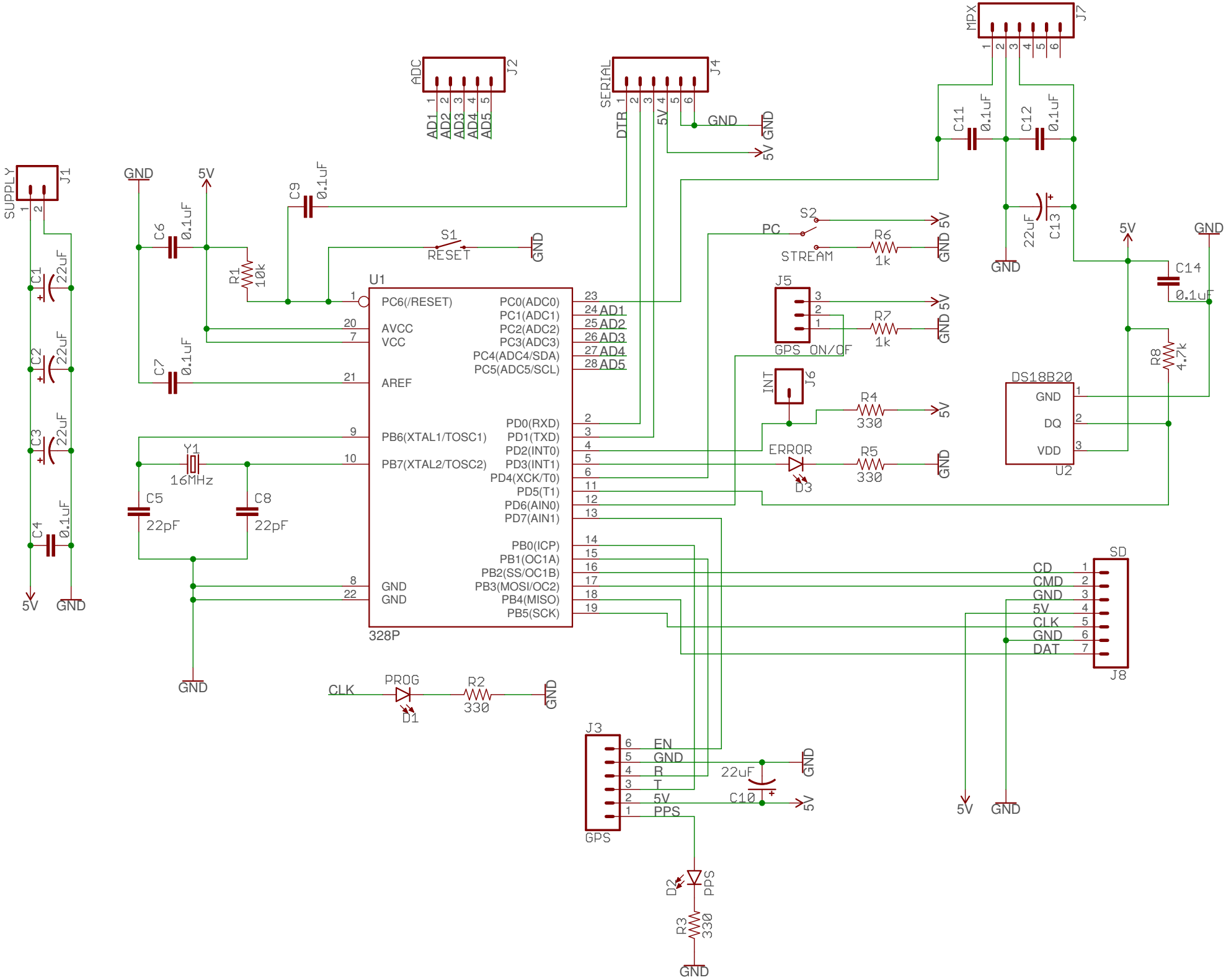
SUPPLY
J1
C1
22uF
C2
22uF
C3
22uF
C4
0.1uF
5V
GND
ADC
J2
AD1
AD2
AD3
AD4
AD5
SERIAL
J4
DTR
5V
GND
MPX
J7
C11
0.1uF
C12
0.1uF
22uF
C13
C9
0.1uF
C6
0.1uF
R1
10k
S1
RESET
U1
PC6(/RESET)
AVCC
VCC
AREF
PB6(XTAL1/TOSC1)
PB7(XTAL2/TOSC2)
GND
GND
PC0(ADC0)
PC1(ADC1)
PC2(ADC2)
PC3(ADC3)
PC4(ADC4/SDA)
PC5(ADC5/SCL)
PD0(RXD)
PD1(TXD)
PD2(INT0)
PD3(INT1)
PD4(XCK/T0)
PD5(T1)
PD6(AIN0)
PD7(AIN1)
PB0(ICP)
PB1(OC1A)
PB2(SS/OC1B)
PB3(MOSI/OC2)
PB4(MISO)
PB5(SCK)
328P
C7
0.1uF
Y1
16MHz
C5
22pF
C8
22pF
S2
PC
STREAM
R6
1k
J5
GPS ON/OF
R7
1k
INT
J6
R4
330
ERROR
D3
R5
330
C14
0.1uF
R8
4.7k
DS18B20
GND
DQ
VDD
U2
SD
CD
CMD
GND
5V
CLK
GND
DAT
J8
CLK
PROG
D1
R2
330
J3
GPS
EN
GND
R
T
5V
PPS
22uF
C10
D2
PPS
R3
330

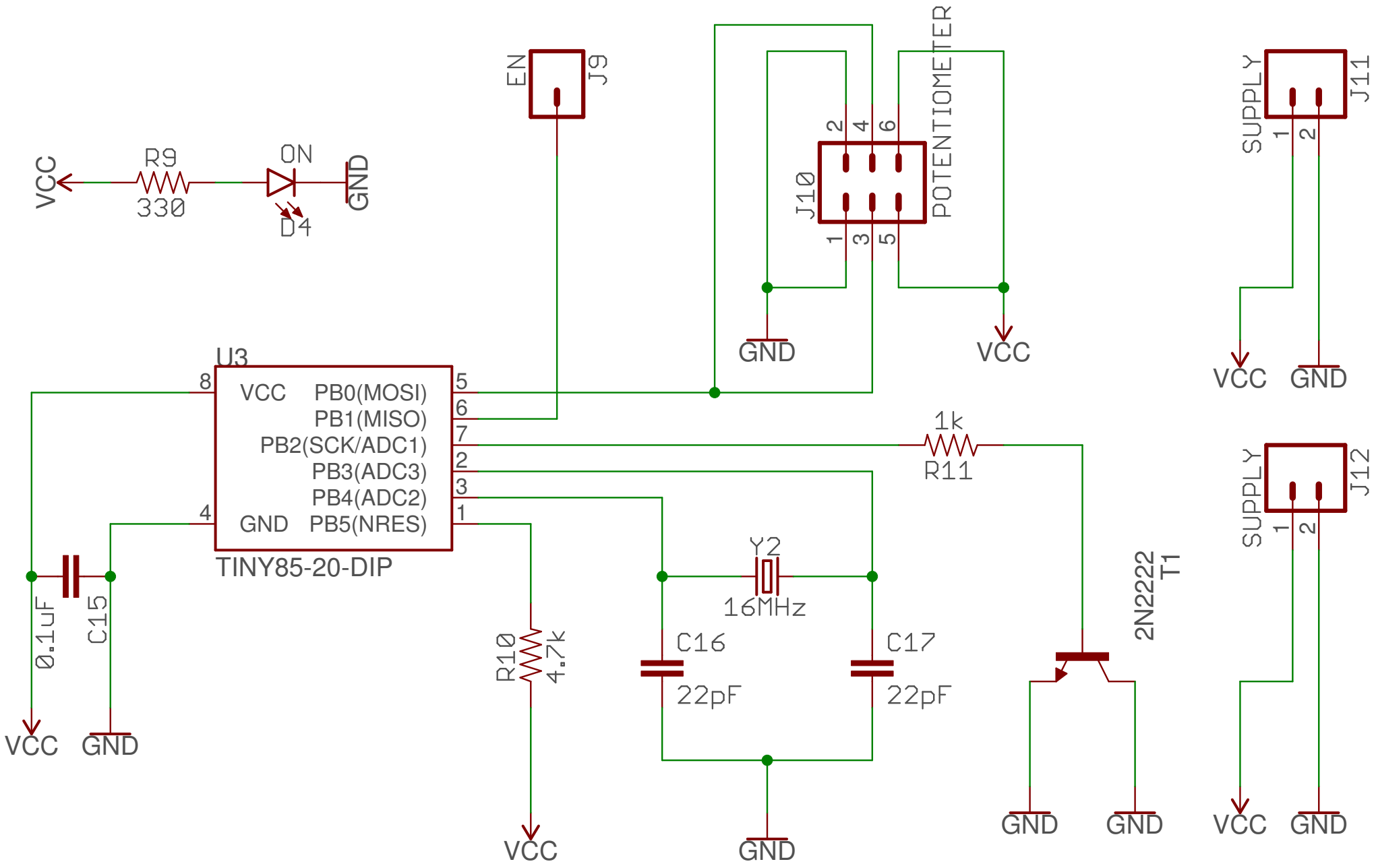
VCC
R9
330
ON
D4
GND
EN
J9
J10
POTENTIOMETER
2
4
6
1
3
5
GND
VCC
SUPPLY
J11
1
2
VCC
GND
U3
8
VCC
PB0(MOSI)
PB1(MISO)
PB2(SCK/ADC1)
PB3(ADC3)
PB4(ADC2)
GND
PB5(NRES)
5
6
7
2
3
1
4
TINY85-20-DIP
1k
R11
SUPPLY
J12
1
2
0.1uF
C15
VCC
GND
R10
4.7k
VCC
Y2
16MHz
C16
22pF
C17
22pF
GND
2N2222
T1
GND
GND
VCC
GND

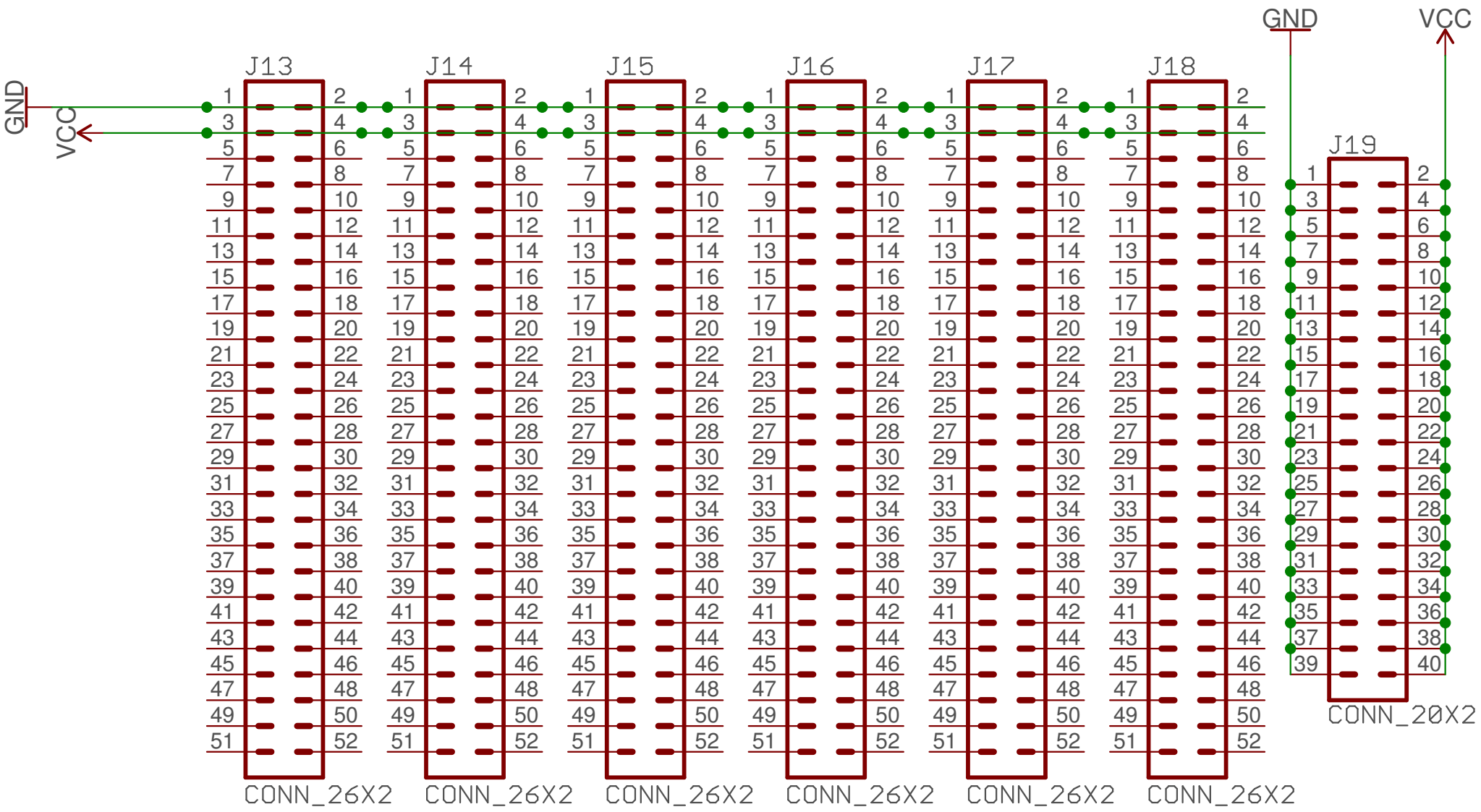
GND
VCC
J13
J14
J15
J16
J17
J18
J19
CONN_26X2
CONN_26X2
CONN_26X2
CONN_26X2
CONN_26X2
CONN_26X2
CONN_20X2

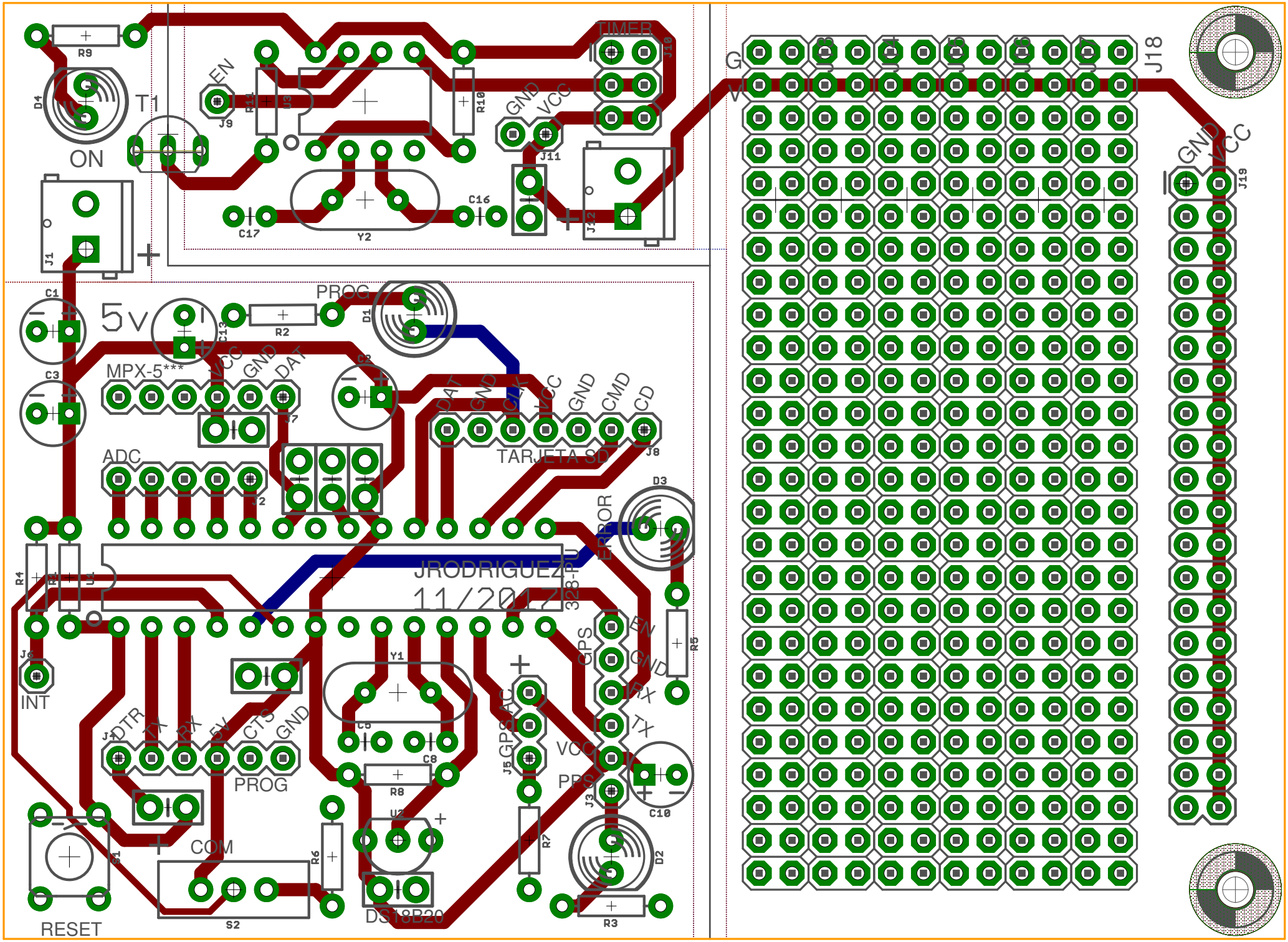
R9
D4
ON
T1
EN
J9
R11
U3
R10
TIMER
J10
GND
VCC
J11
C16
C17
Y2
J12
J1
C1
5v
C13
PROG
R2
D1
C3
MPX-5***
VCC
GND
DAT
R7
R2
DAT
GND
CLK
VCC
GND
CMD
CD
TARJETA SD
J8
ADC
J2
D3
ERROR
R4
R1
U1
JRODRIGUEZ
11/20
328-PU
J6
INT
Y1
GPS
EN
GND
RX
TX
R5
J4
DTR
TX
RX
EN
CTS
GND
PROG
C5
C8
J5
GPS
ADC
VCC
PRS
J3
C10
R8
U2
R7
D2
COM
R6
S2
DS18B20
R3
RESET
J18
J19
GND
VCC