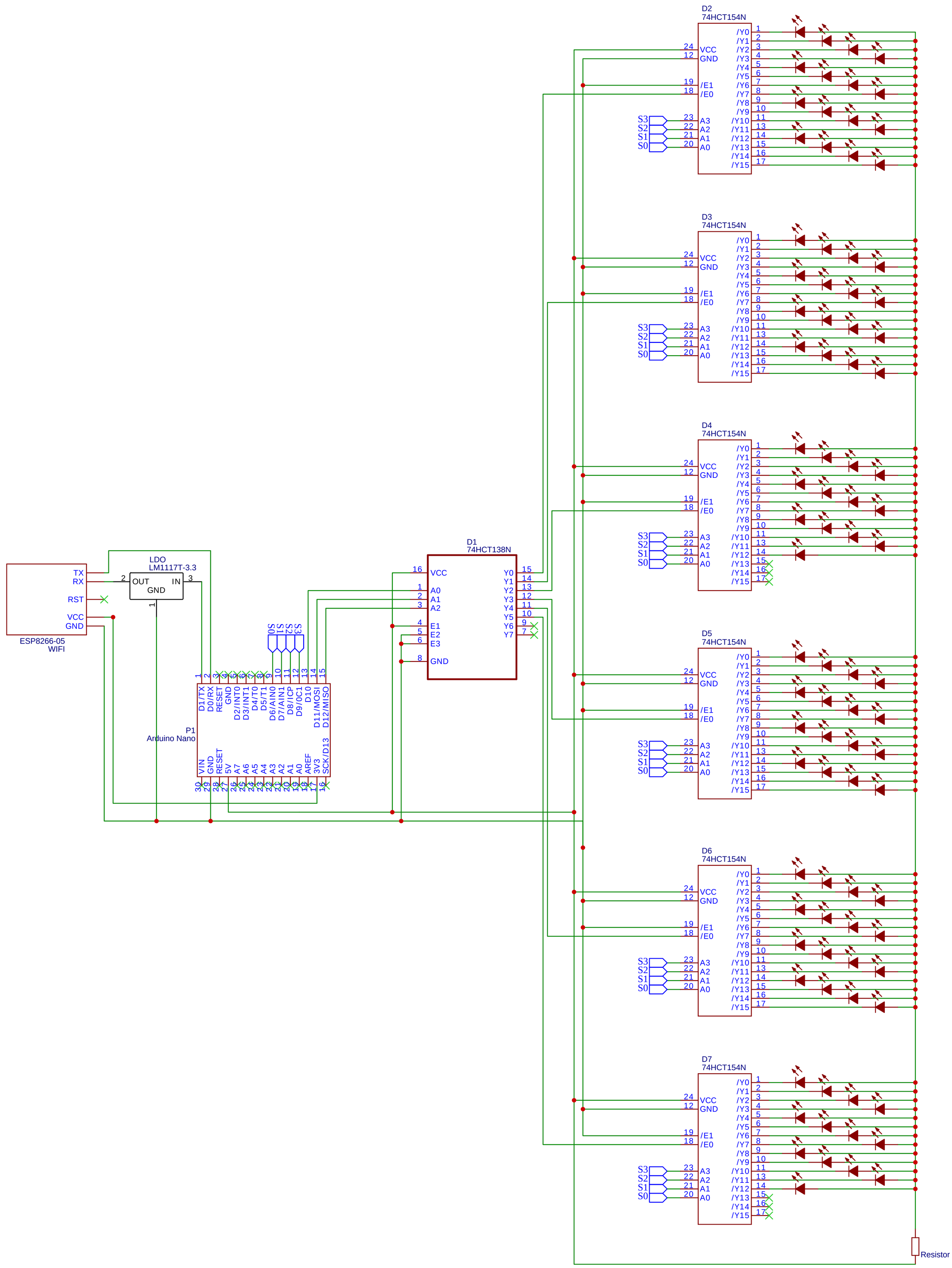

TITLE: MTA F Line Tracker	REV: 1.0
Company:	Sheet: 1/1
Date: 2022-01-05	Drawn By: Brendan McCloskey

EasyEDA