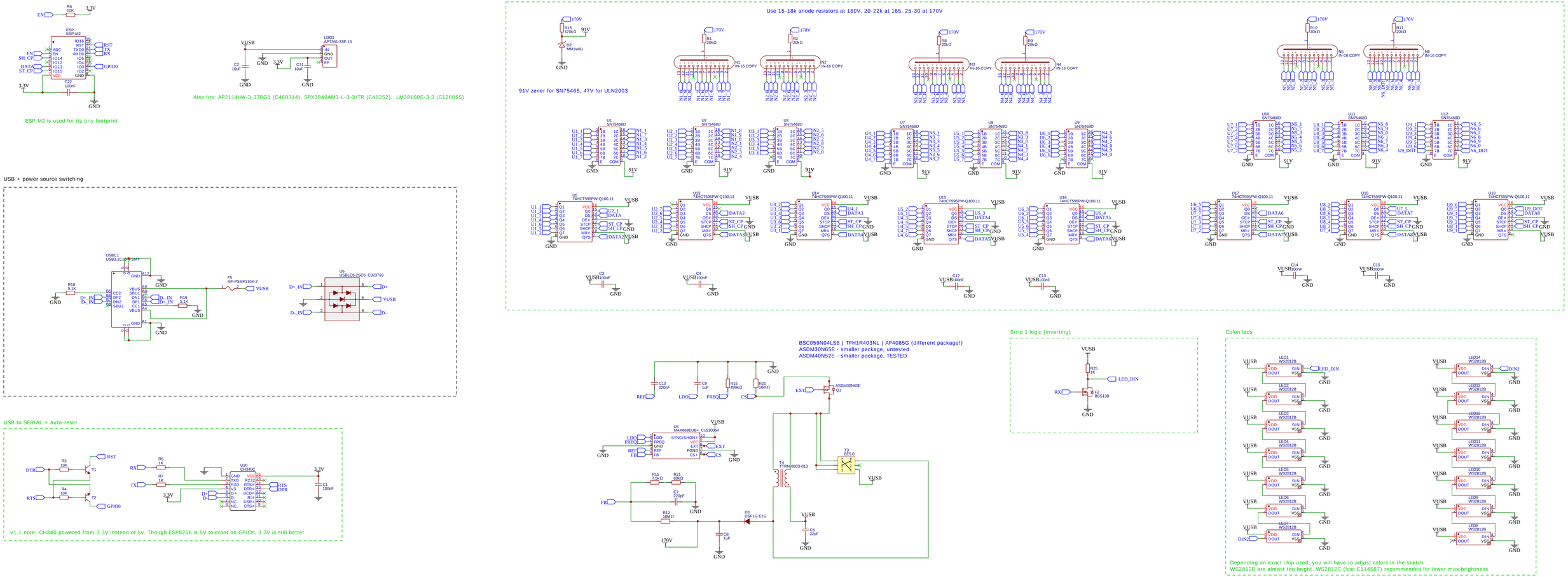
ESP-M2 is used for its tiny footprint
Also fits: AP2114HA-3-3TRG1 (C460314), SPX3940AM3-L-3-3/TR (C48252), LM39100S-3.3 (C126055)
USB + power source switching
USB to SERIAL + auto-reset
v1.1 note: CH340 powered from 3.3V instead of 5v. Though ESP8266 is 5V tolerant on GPIOs, 3.3V is still better
Nixies + drivers
Use 15-18k anode resistors at 160V, 20-22k at 165, 25-30 at 170V
91V zener for SN75468, 47V for ULN2003
BSC059N04LS6 | TPH1R403NL | AP4085G (different package!)
ASDM30N65E - smaller package, untested
ASDM40N52E - smaller package, TESTED
Strip 1 logic (inverting)
Colon leds
Depending on exact chip used, you will have to adjust colors in the sketch
WS2812B are almost too bright. WS2812C (lcsc C114587) recommended for lower max brightness.
R15: 10k for 160V, 7.5k for 165V (recommended!), 2.2k for 170V, 1k for 175V
When using ULN2003, set to 160V to properly turn off the tubes
T4: TTRN-060S-013
T3: CEEH54
T3/T4 is a dual footprint, so pick only one. Only the smaller CEEH54 fits in the original enclosure
TITLE:
NICK2 IN-16 Nixe Clock
REV: 1.1
Company:
Sheet: 1/1
Date: 2022-05-31
Drawn By: NiceThings
EasyEDA