JOB START WORKSHEET

Mile High Metal Works, Inc **303-485-8283** **Phone**
7399 Miller Court, Frederick, CO 80504 **303-485-8206** **Fax**

Job #/ PO#:	480		299	Date:	1/28/2026
Job Name:	Wood Partners - Alta Flatirons			**Drafting**	
Job Desc.	Pre-cast Stair Core 2				
Paint:	Red Oxide Primed	Fabrication Completion Date:	0		
By	CBA	Install due date:	0	Install Hours	6.75

Quantity	Total LF	Description	Quantity	Total LF	Description
6	-	Stair Guardrail 1-6 (299-GR1 - GR6)	-	-	-
2	-	Stair Guardrail 7 (299-GR7)	-	-	-
2	-	Stair Guardrail 8 (299-GR8)	-	-	-
1	-	Stair Guardrail 9 (299-GR9)	-	-	-
2	-	Landing Rail (299-LR)	-	-	-
1	-	Barrier Gate (299-BG)	-	-	-
6	-	Hand Grab 1-6 (299-HG1 - HG6)	-	-	-
2	-	Hand Grab 7 (299-HG7)	-	-	-
2	-	Hand Grab 8 (299-HG8)	-	-	-
1	-	Hand Grab 9 (299-HG9)	-	-	-
6	-	Wall Grab 1-6 (299-WG1 - WG6)	-	-	-
2	-	Wall Grab 7 (299-WG7)	-	-	-
2	-	Wall Grab 8 (299-WG8)	-	-	-
1	-	Wall Grab 9 (299-WG9)	-	-	-
-	-	-	-	-	-
-	-	-	-	-	-
-	-	-	-	-	-
-	-	-	Total Part Counts		
-	-	-	Quantity	Total LF	
-	-	-	36	0	

Project Manager	*Quality Control*	Quantity	Hardware	#pcs paint
Gary Almeida	**Checked by:**	35	Wall Handrail Brackets (Round)	35
(303)478-7402		127	3/8"Ø x 3" Simpson Titen HD Anchors	127
		134	1/4" Tek Screws	134
Foreman	**Checked by:**	-	-	-
0		-	-	-
		-	-	-
	Checked by:	-	-	-
Job Contact 1		-	-	-
0		-	-	-
0	**Checked by:**	-	-	-
		-	-	-
Job Contact 2		-	-	-
0		-	-	-
0			**Vendors**	

NOTES:		*By:*	*Date:*	*Notes:*
	Dencol			
	Metro			
	Platte Anchor			
	Drexel			
	Western Wire			
	Material			
	Job Site Address			
	350 Gateway Drive, Superior CO 80027			

T:\480 Alta Flatirons\Solidworks\Stairs\Stair Core 2\Fab\Stair Core 2 Pre-Cast Guardrail Fab

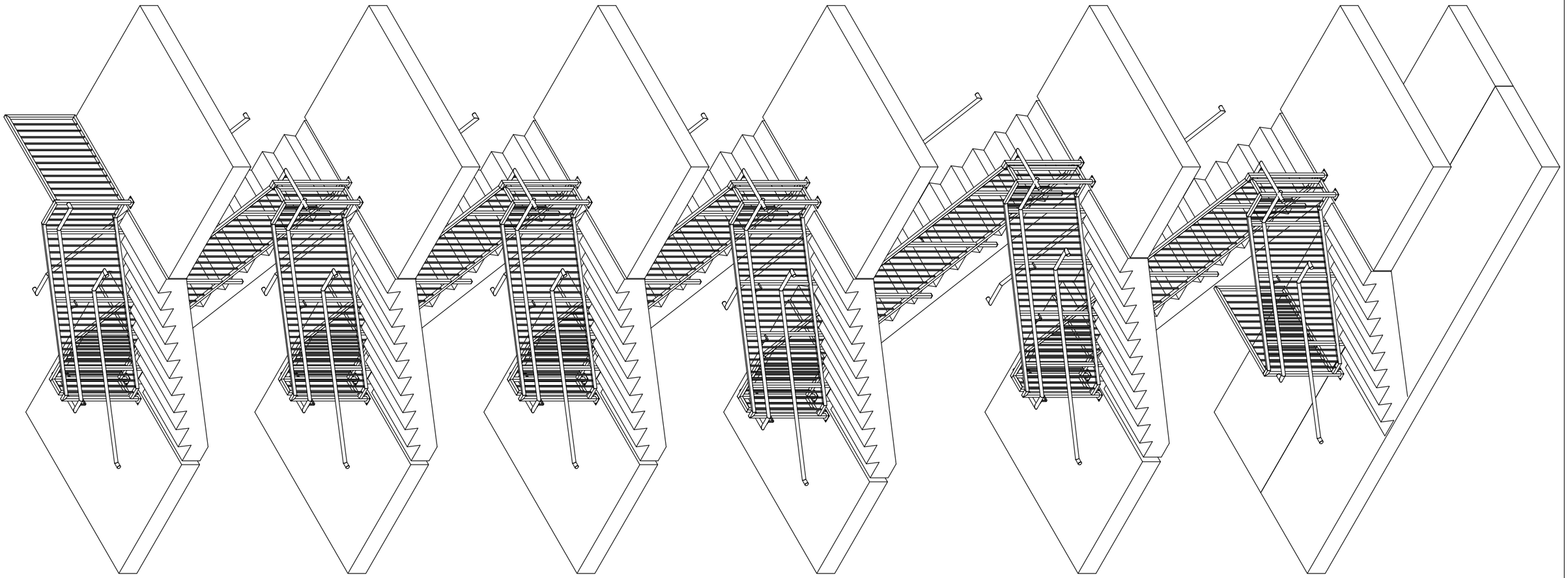

Wood Partners - Alta Flatirons
Pre-cast Stair Core 2 Fab

Index	Date	Description	By

Mile High Metal Works, Inc.
7399 Miller Court, Unit A, Frederick, CO 80504
Office 303-485-8283 Fax 303-485-8206

Project Name:	Description:	Date:	Color:	By:	Drawing:
Wood Partners - Alta Flatirons	Pre-cast Stair Core 2 Fab	1/19/2026	Red Oxide Primed	CBA	F1
		Job #: 480-299		Rev: 0	

THE INFORMATION CONTAINED IN THIS DRAWING IS THE SOLE PROPERTY OF Mile High Metal Works Inc. ANY REPRODUCTION IN PART OR AS A WHOLE WITHOUT THE WRITTEN PERMISSION OF Mile High Metal Works Inc. IS PROHIBITED.

Material:
Frame: 1 1/2" Sq. x 11 Ga. TS
Pickets: 1/2" Sq. x 16 Ga. TS
Foot Pad : 44.5
Typ. Guardrail Bracket

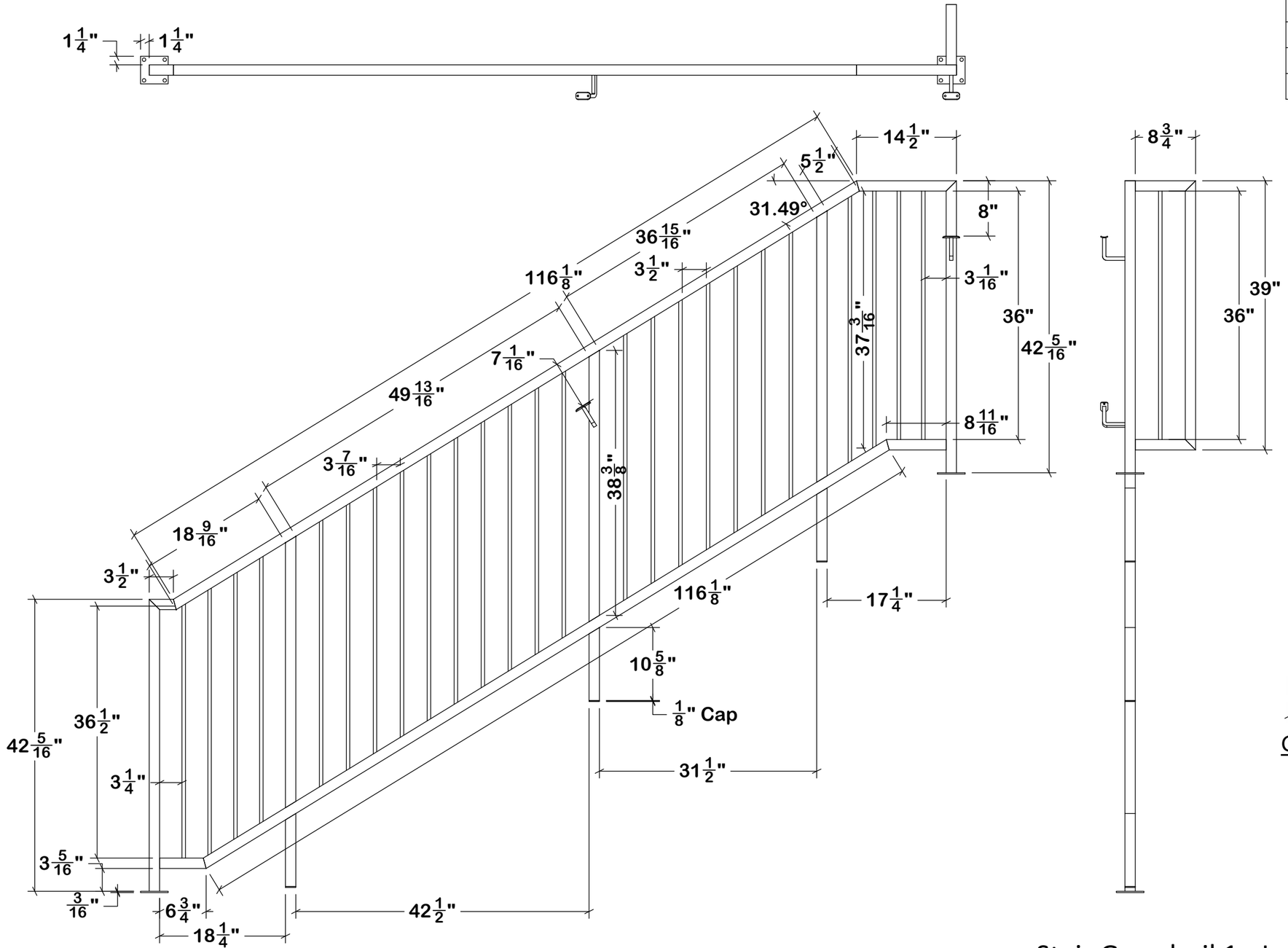

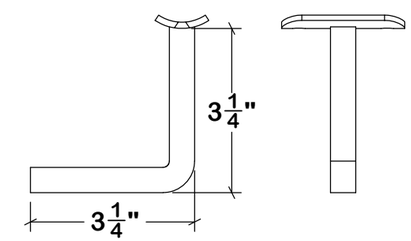

Guardrail Bracket - Qty (3)

Stair Guardrail 1 - Label "299-GR1" - Qty (1)

Index	Date	Description	By

Mile High Metal Works, Inc.
7399 Miller Court, Unit A, Frederick, CO 80504
Office 303-485-8283 Fax 303-485-8206

Project Name:	Description:	Date:	Color:	By:	Drawing:
Wood Partners - Alta Flatirons	Pre-cast Stair Core 2 Fab	1/19/2026	Red Oxide Primed	CBA	F2
		Job #: 480-299		Rev: 0	

T:\480 Alta Flatirons\Solidworks\Stairs\Stair Core 2\Fab\Stair Core 2 Pre-Cast Guardrail Fab

THE INFORMATION CONTAINED IN THIS DRAWING IS THE SOLE PROPERTY OF Mile High Metal Works Inc. ANY REPRODUCTION IN PART OR AS A WHOLE WITHOUT THE WRITTEN PERMISSION OF Mile High Metal Works Inc. IS PROHIBITED.

Material:
Frame: 1 1/2" Sq. x 11 Ga. TS
Pickets: 1/2" Sq. x 16 Ga. TS
Foot Pad : 44.5
Typ. Guardrail Bracket

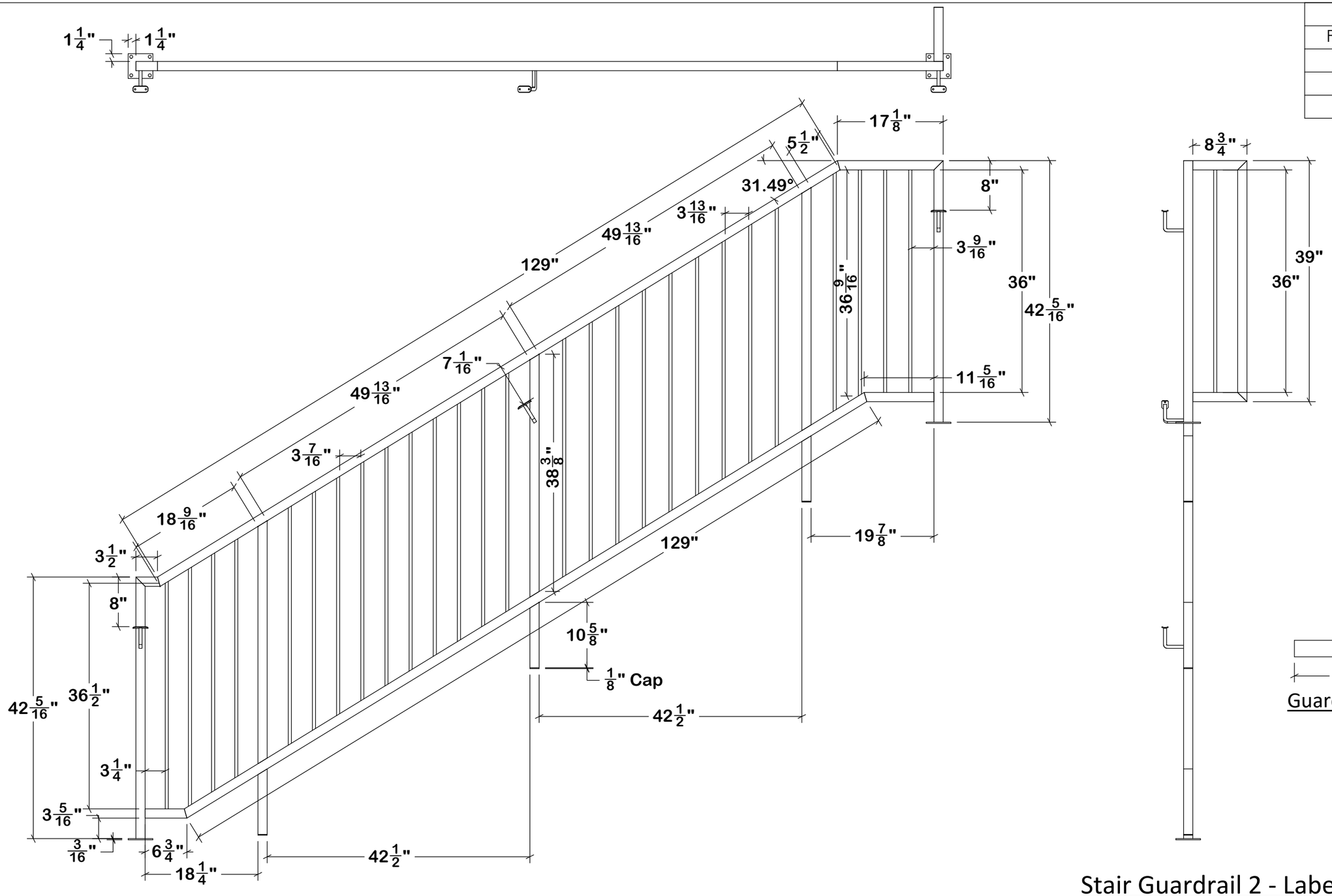

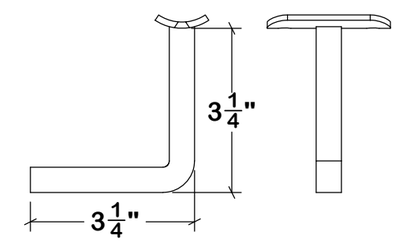

Guardrail Bracket - Qty (3)

Stair Guardrail 2 - Label "299-GR2" - Qty (1)

Index	Date	Description	By

Mile High Metal Works, Inc.
7399 Miller Court, Unit A, Frederick, CO 80504
Office 303-485-8283 Fax 303-485-8206

Project Name:	Description:	Date:	Color:	By:	Drawing:
Wood Partners - Alta Flatirons	Pre-cast Stair Core 2 Fab	1/19/2026	Red Oxide Primed	CBA	F3
		Job #: 480-299		Rev: 0	

T:\480 Alta Flatirons\Solidworks\Stairs\Stair Core 2\Fab\Stair Core 2 Pre-Cast Guardrail Fab

THE INFORMATION CONTAINED IN THIS DRAWING IS THE SOLE PROPERTY OF Mile High Metal Works Inc. ANY REPRODUCTION IN PART OR AS A WHOLE WITHOUT THE WRITTEN PERMISSION OF Mile High Metal Works Inc. IS PROHIBITED.

Material:
Frame: 1 1/2" Sq. x 11 Ga. TS
Pickets: 1/2" Sq. x 16 Ga. TS
Foot Pad : 44.5
Typ. Guardrail Bracket

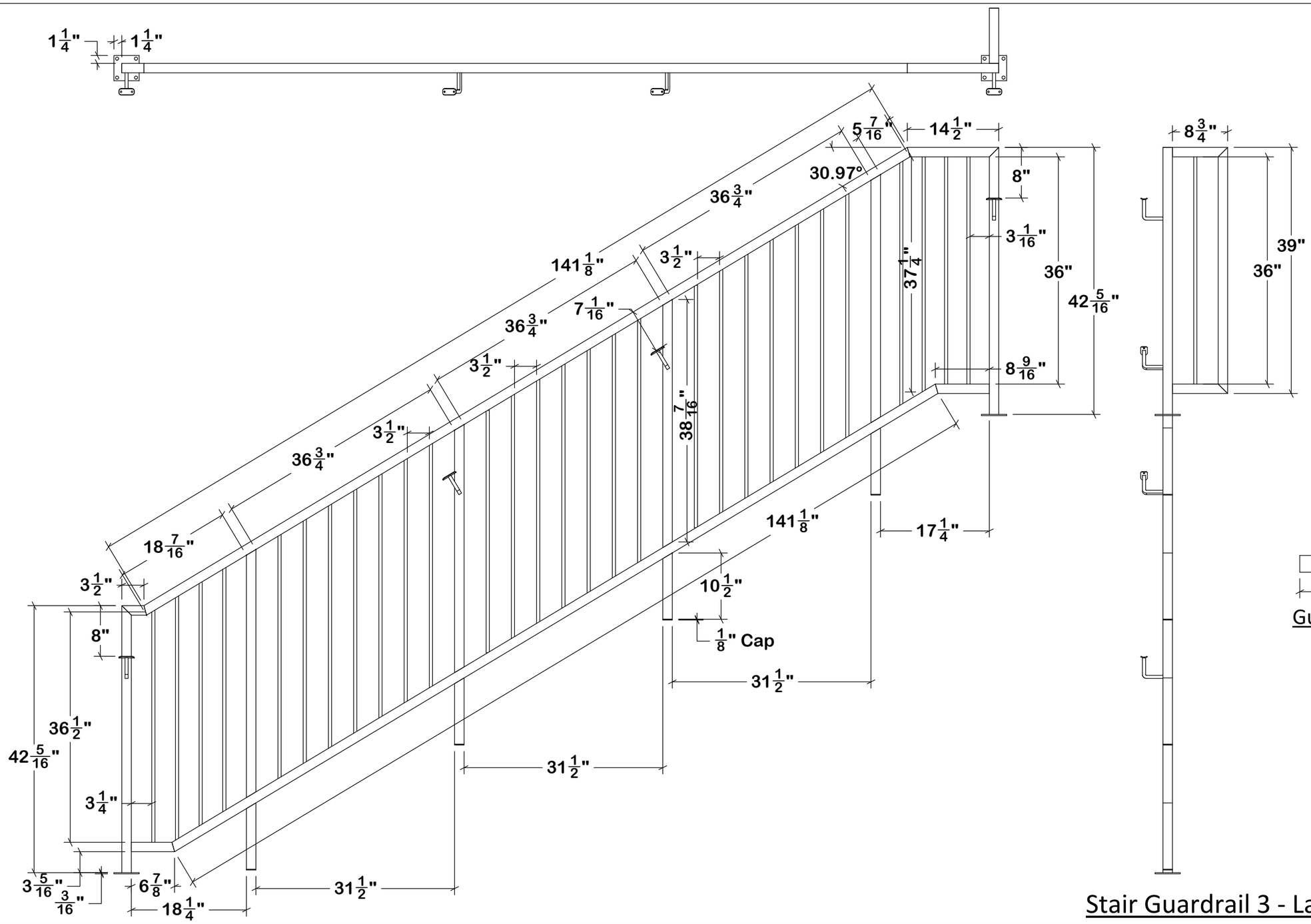

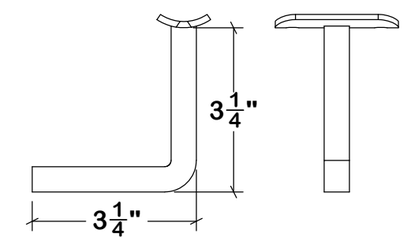

Guardrail Bracket - Qty (4)

Stair Guardrail 3 - Label "299-GR3" - Qty (1)

Index	Date	Description	By

Mile High Metal Works, Inc.
7399 Miller Court, Unit A, Frederick, CO 80504
Office 303-485-8283 Fax 303-485-8206

Project Name:	Description:	Date:	Color:	By:	Drawing:
Wood Partners - Alta Flatirons	Pre-cast Stair Core 2 Fab	1/19/2026	Red Oxide Primed	CBA	F4
		Job #: 480-299		Rev: 0	

T:\480 Alta Flatirons\Solidworks\Stairs\Stair Core 2\Fab\Stair Core 2 Pre-Cast Guardrail Fab

THE INFORMATION CONTAINED IN THIS DRAWING IS THE SOLE PROPERTY OF Mile High Metal Works Inc. ANY REPRODUCTION IN PART OR AS A WHOLE WITHOUT THE WRITTEN PERMISSION OF Mile High Metal Works Inc. IS PROHIBITED.

Material:
Frame: 1 1/2" Sq. x 11 Ga. TS
Pickets: 1/2" Sq. x 16 Ga. TS
Foot Pad : 44.5
Typ. Guardrail Bracket

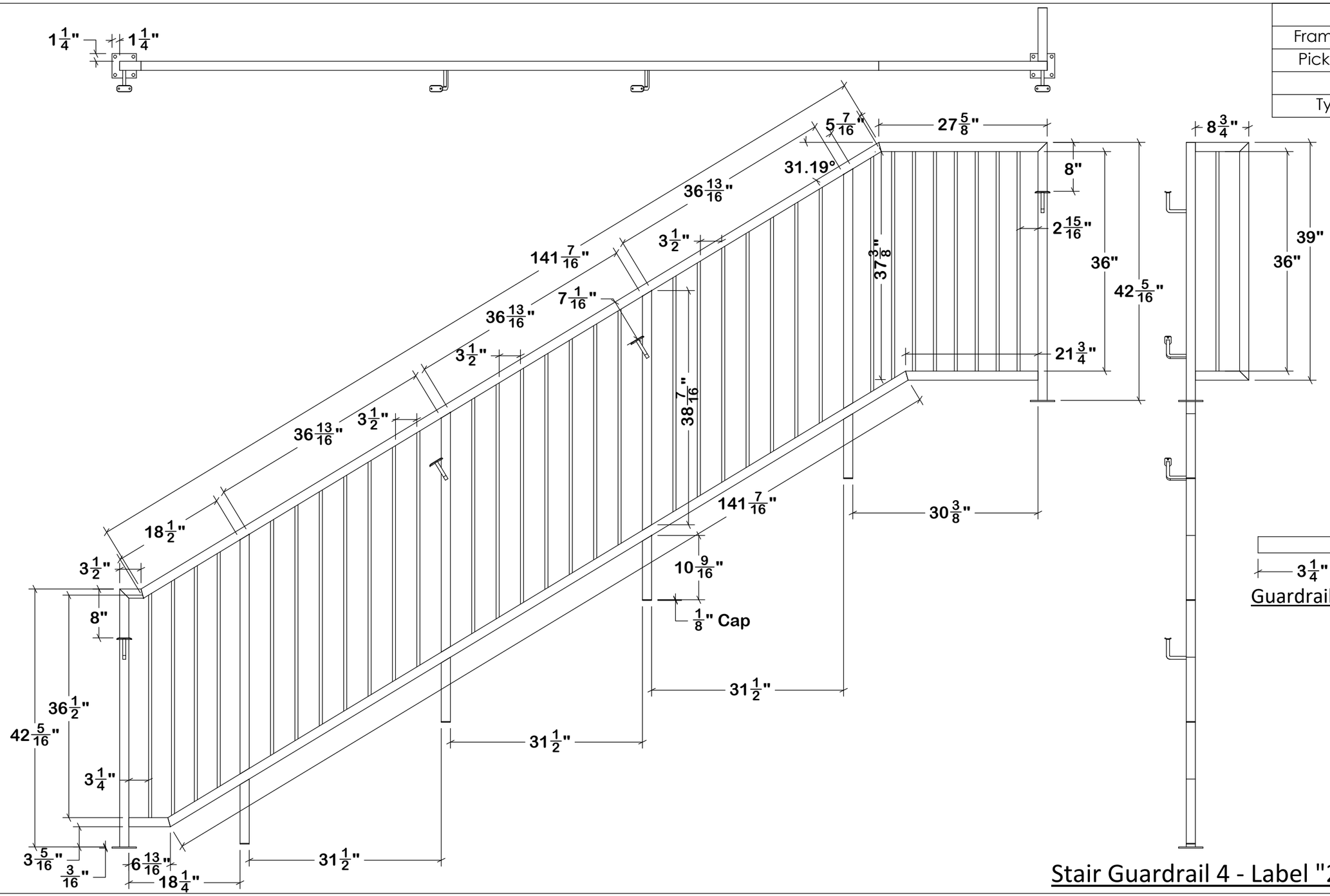

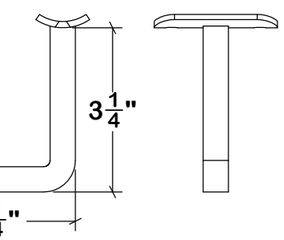

Guardrail Bracket - Qty (4)

Stair Guardrail 4 - Label "299-GR4" - Qty (1)

Index	Date	Description	By

Mile High Metal Works, Inc.
7399 Miller Court, Unit A, Frederick, CO 80504
Office 303-485-8283 Fax 303-485-8206

Project Name:	Description:	Date:	Color:	By:	Drawing:
Wood Partners - Alta Flatirons	Pre-cast Stair Core 2 Fab	1/19/2026	Red Oxide Primed	CBA	F5
		Job #: 480-299		Rev: 0	

T:\480 Alta Flatirons\Solidworks\Stairs\Stair Core 2\Fab\Stair Core 2 Pre-Cast Guardrail Fab

THE INFORMATION CONTAINED IN THIS DRAWING IS THE SOLE PROPERTY OF Mile High Metal Works Inc. ANY REPRODUCTION IN PART OR AS A WHOLE WITHOUT THE WRITTEN PERMISSION OF Mile High Metal Works Inc. IS PROHIBITED.

Material:
Frame: 1 1/2" Sq. x 11 Ga. TS
Pickets: 1/2" Sq. x 16 Ga. TS
Foot Pad : 44.5
Typ. Guardrail Bracket

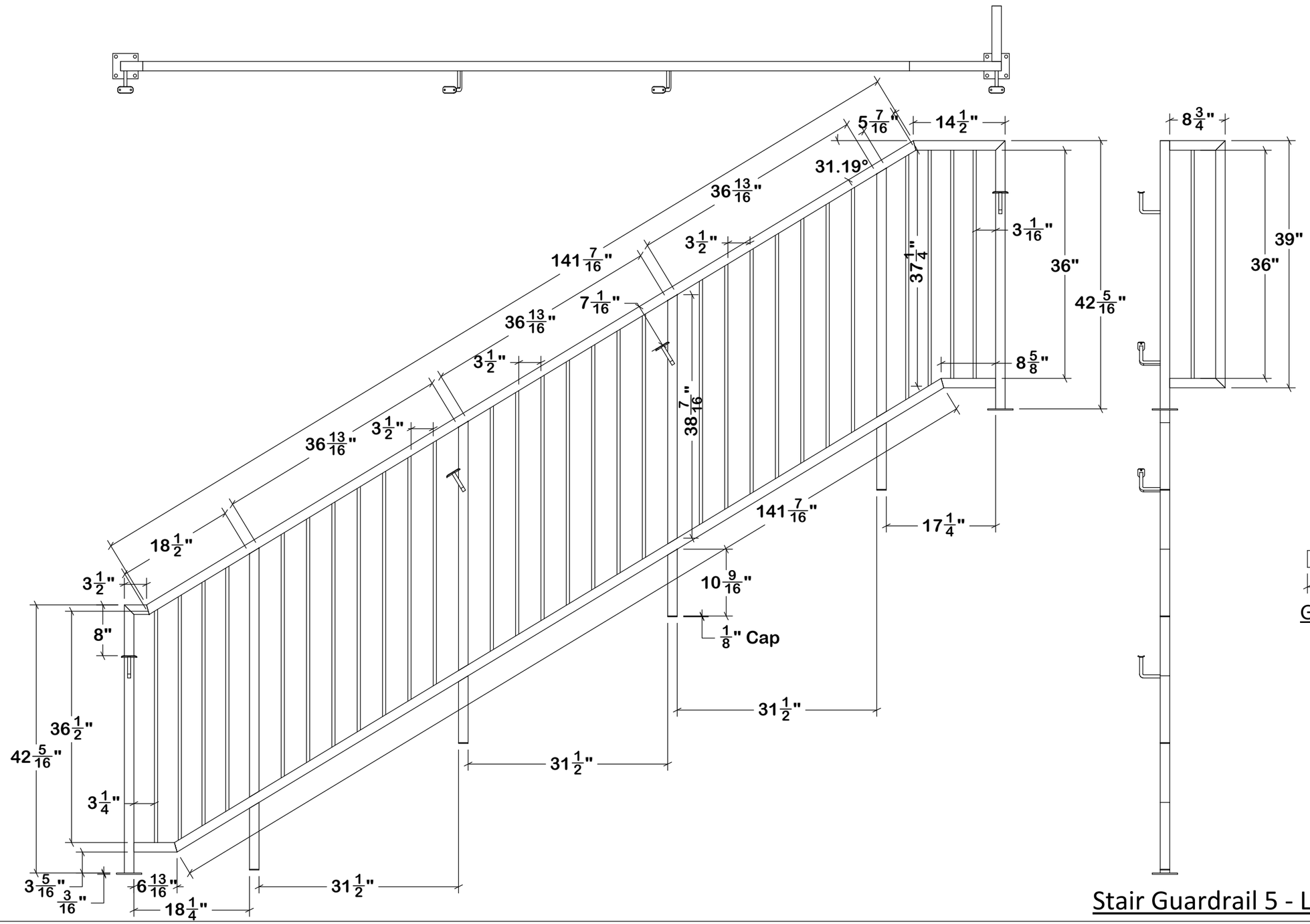

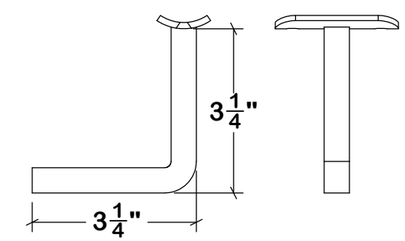

Guardrail Bracket - Qty (4)

Stair Guardrail 5 - Label "299-GR5" - Qty (1)

Index	Date	Description	By

Mile High Metal Works, Inc.
7399 Miller Court, Unit A, Frederick, CO 80504
Office 303-485-8283 Fax 303-485-8206

Project Name:	Description:	Date:	Color:	By:	Drawing:
Wood Partners - Alta Flatirons	Pre-cast Stair Core 2 Fab	1/19/2026	Red Oxide Primed	CBA	F6
		Job #: 480-299		Rev: 0	

T:\480 Alta Flatirons\Solidworks\Stairs\Stair Core 2\Fab\Stair Core 2 Pre-Cast Guardrail Fab

THE INFORMATION CONTAINED IN THIS DRAWING IS THE SOLE PROPERTY OF Mile High Metal Works Inc. ANY REPRODUCTION IN PART OR AS A WHOLE WITHOUT THE WRITTEN PERMISSION OF Mile High Metal Works Inc. IS PROHIBITED.

Material:
Frame: 1 1/2" Sq. x 11 Ga. TS
Pickets: 1/2" Sq. x 16 Ga. TS
Foot Pad : 44.5
Typ. Guardrail Bracket

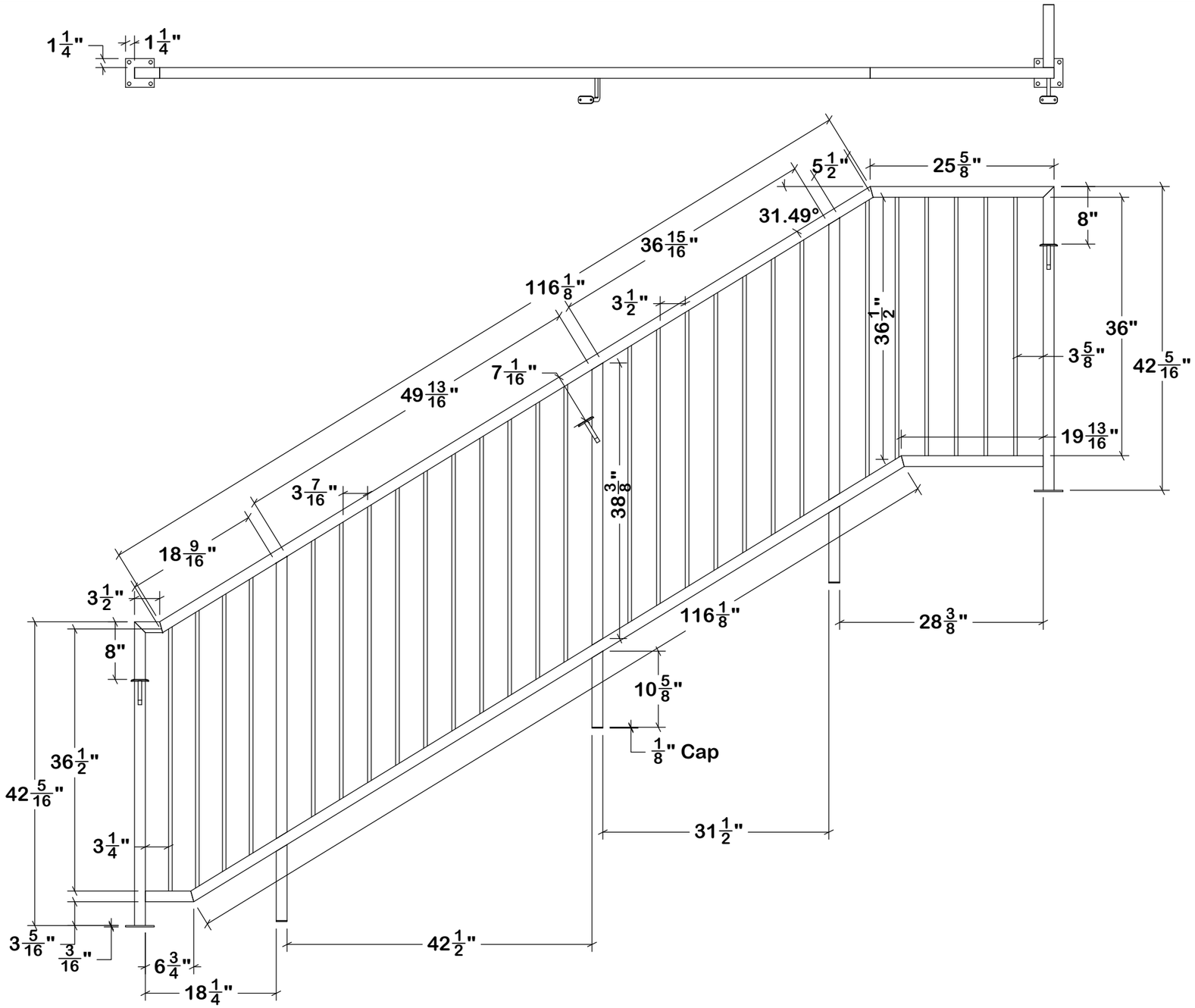

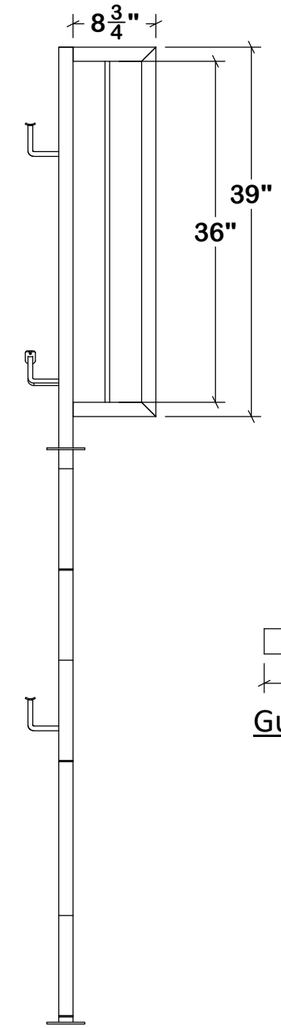

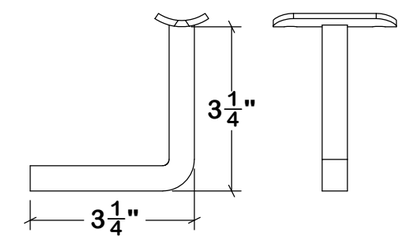

Guardrail Bracket - Qty (3)

Stair Guardrail 6 - Label "299-GR6" - Qty (1)

Index	Date	Description	By

Mile High Metal Works, Inc.
7399 Miller Court, Unit A, Frederick, CO 80504
Office 303-485-8283 Fax 303-485-8206

Project Name:	Description:	Date:	Color:	By:	Drawing:
Wood Partners - Alta Flatirons	Pre-cast Stair Core 2 Fab	1/19/2026	Red Oxide Primed	CBA	F7
		Job #: 480-299		Rev: 0	

T:\480 Alta Flatirons\Solidworks\Stairs\Stair Core 2\Fab\Stair Core 2 Pre-Cast Guardrail Fab

THE INFORMATION CONTAINED IN THIS DRAWING IS THE SOLE PROPERTY OF Mile High Metal Works Inc. ANY REPRODUCTION IN PART OR AS A WHOLE WITHOUT THE WRITTEN PERMISSION OF Mile High Metal Works Inc. IS PROHIBITED.

Material:
Frame: 1 1/2" Sq. x 11 Ga. TS
Pickets: 1/2" Sq. x 16 Ga. TS
Foot Pad : 44.5
Typ. Guardrail Bracket

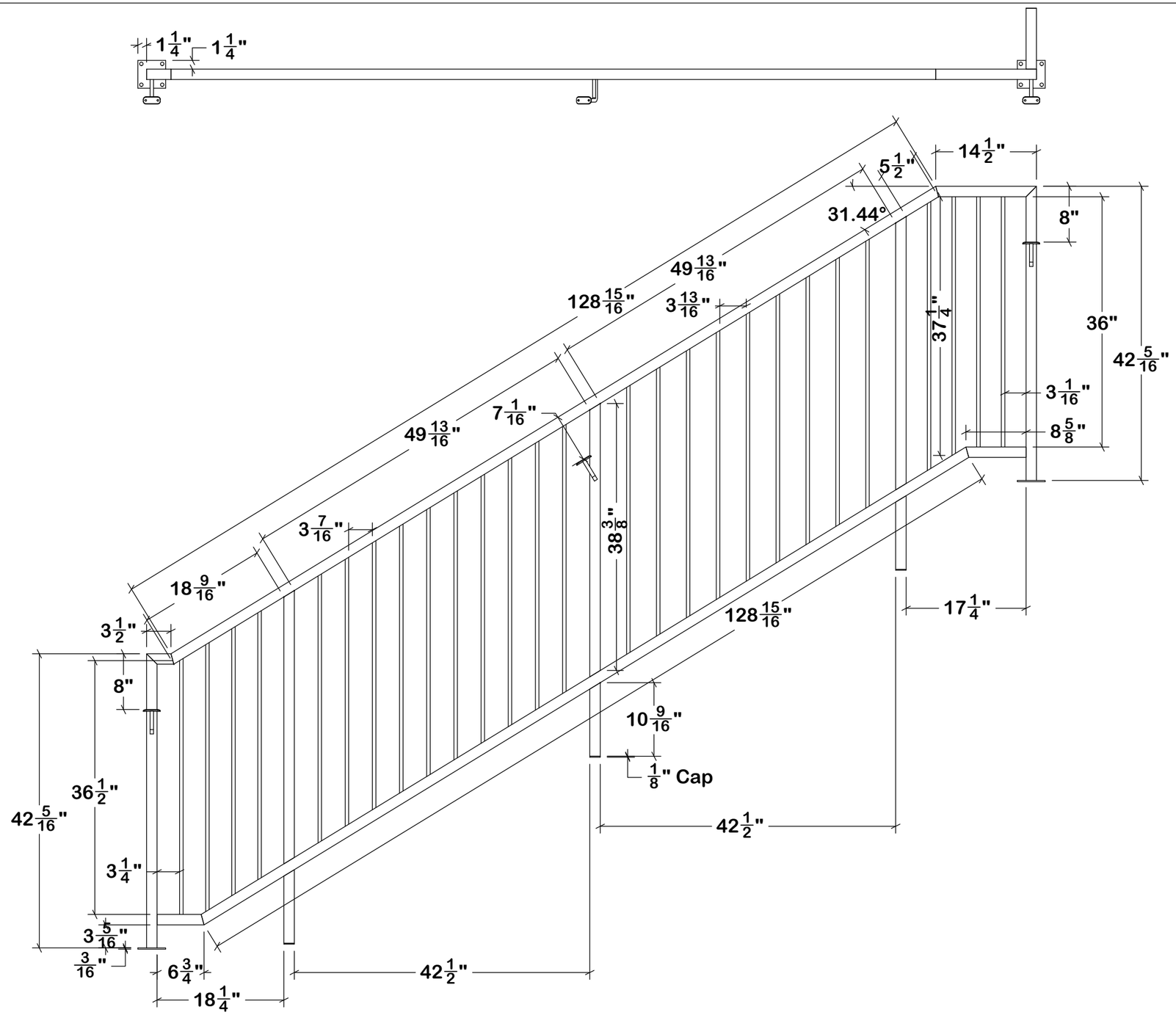

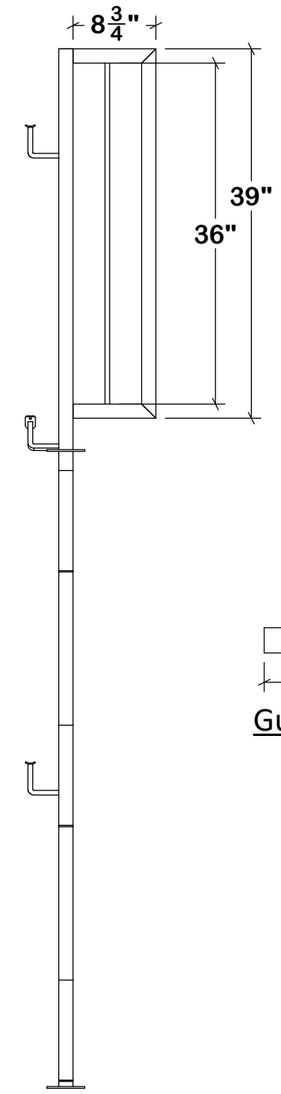

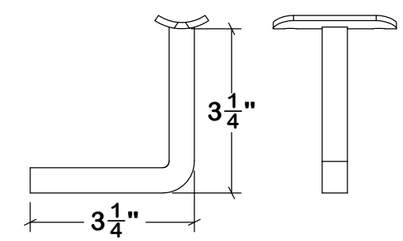

Guardrail Bracket - Qty (3)

Stair Guardrail 7 - Label "299-GR7" - Qty (2)

Index	Date	Description	By

Mile High Metal Works, Inc.
7399 Miller Court, Unit A, Frederick, CO 80504
Office 303-485-8283 Fax 303-485-8206

Project Name:	Description:	Date:	Color:	By:	Drawing:
Wood Partners - Alta Flatirons	Pre-cast Stair Core 2 Fab	1/19/2026	Red Oxide Primed	CBA	F8
		Job #: 480-299		Rev: 0	

T:\480 Alta Flatirons\Solidworks\Stairs\Stair Core 2\Fab\Stair Core 2 Pre-Cast Guardrail Fab

THE INFORMATION CONTAINED IN THIS DRAWING IS THE SOLE PROPERTY OF Mile High Metal Works Inc. ANY REPRODUCTION IN PART OR AS A WHOLE WITHOUT THE WRITTEN PERMISSION OF Mile High Metal Works Inc. IS PROHIBITED.

Material:
Frame: 1 1/2" Sq. x 11 Ga. TS
Pickets: 1/2" Sq. x 16 Ga. TS
Foot Pad : 44.5
Typ. Guardrail Bracket

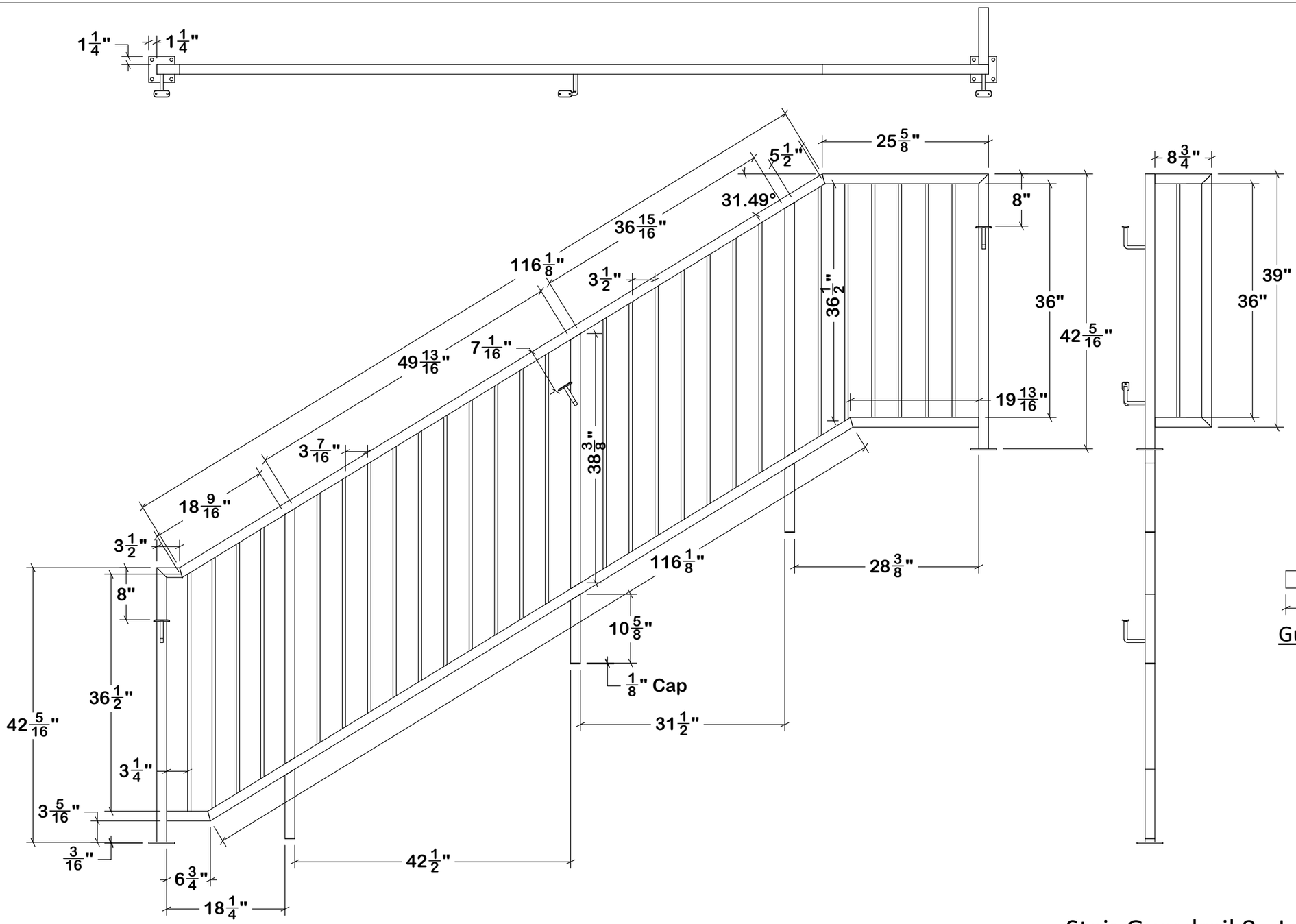

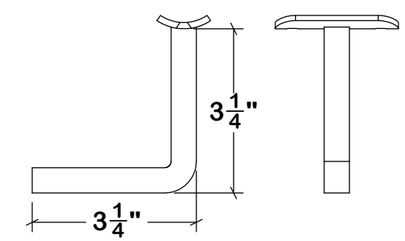

Guardrail Bracket - Qty (3)

Stair Guardrail 8 - Label "299-GR8" - Qty (2)

Index	Date	Description	By

Mile High Metal Works, Inc.
7399 Miller Court, Unit A, Frederick, CO 80504
Office 303-485-8283 Fax 303-485-8206

Project Name:	Description:	Date:	Color:	By:	Drawing:
Wood Partners - Alta Flatirons	Pre-cast Stair Core 2 Fab	1/19/2026	Red Oxide Primed	CBA	F9
		Job #: 480-299		Rev: 0	

T:\480 Alta Flatirons\Solidworks\Stairs\Stair Core 2\Fab\Stair Core 2 Pre-Cast Guardrail Fab

THE INFORMATION CONTAINED IN THIS DRAWING IS THE SOLE PROPERTY OF Mile High Metal Works Inc. ANY REPRODUCTION IN PART OR AS A WHOLE WITHOUT THE WRITTEN PERMISSION OF Mile High Metal Works Inc. IS PROHIBITED.

Material:
Frame: 1 1/2" Sq. x 11 Ga. TS
Pickets: 1/2" Sq. x 16 Ga. TS
Foot Pad : 44.5
Typ. Guardrail Bracket

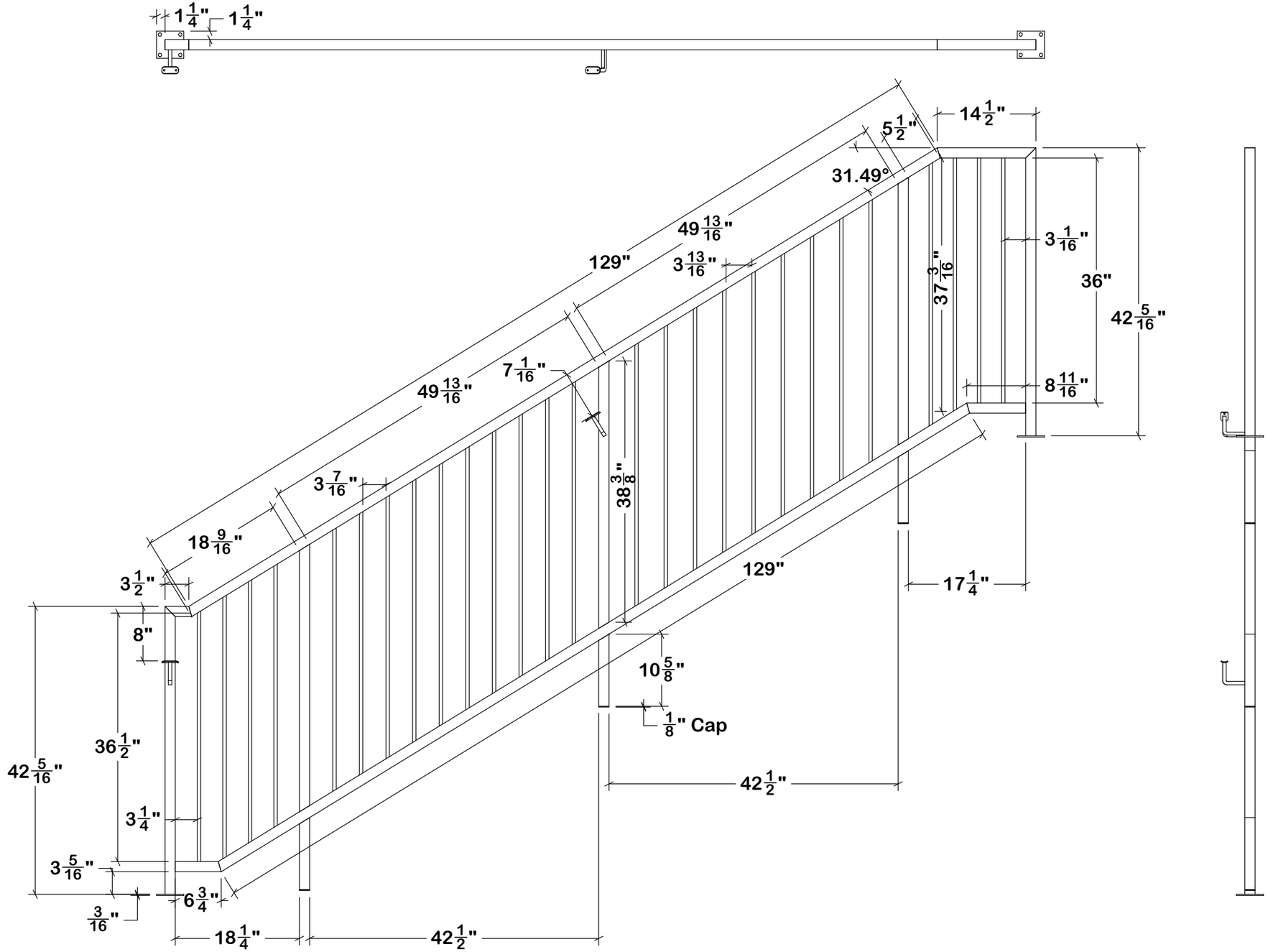

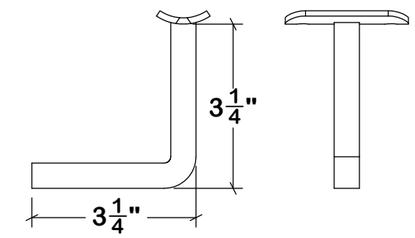

Guardrail Bracket - Qty (2)

Stair Guardrail 9 - Label "299-GR9" - Qty (1)

Index	Date	Description	By

Mile High Metal Works, Inc.
7399 Miller Court, Unit A, Frederick, CO 80504
Office 303-485-8283 Fax 303-485-8206

Project Name: Wood Partners - Alta Flatirons

Description: Pre-cast Stair Core 2 Fab

Date: 1/19/2026

Job #: 480-299

Color: Red Oxide Primed

By: CBA

Rev: 0

Drawing: F10

T:\480 Alta Flatirons\Solidworks\Stairs\Stair Core 2\Fab\Stair Core 2 Pre-Cast Guardrail Fab

THE INFORMATION CONTAINED IN THIS DRAWING IS THE SOLE PROPERTY OF Mile High Metal Works Inc. ANY REPRODUCTION IN PART OR AS A WHOLE WITHOUT THE WRITTEN PERMISSION OF Mile High Metal Works Inc. IS PROHIBITED.

Material:
Frame: 1 1/2" Sq. x 11 Ga. TS
Pickets: 1/2" Sq. x 16 Ga. TS
Typ. Tab

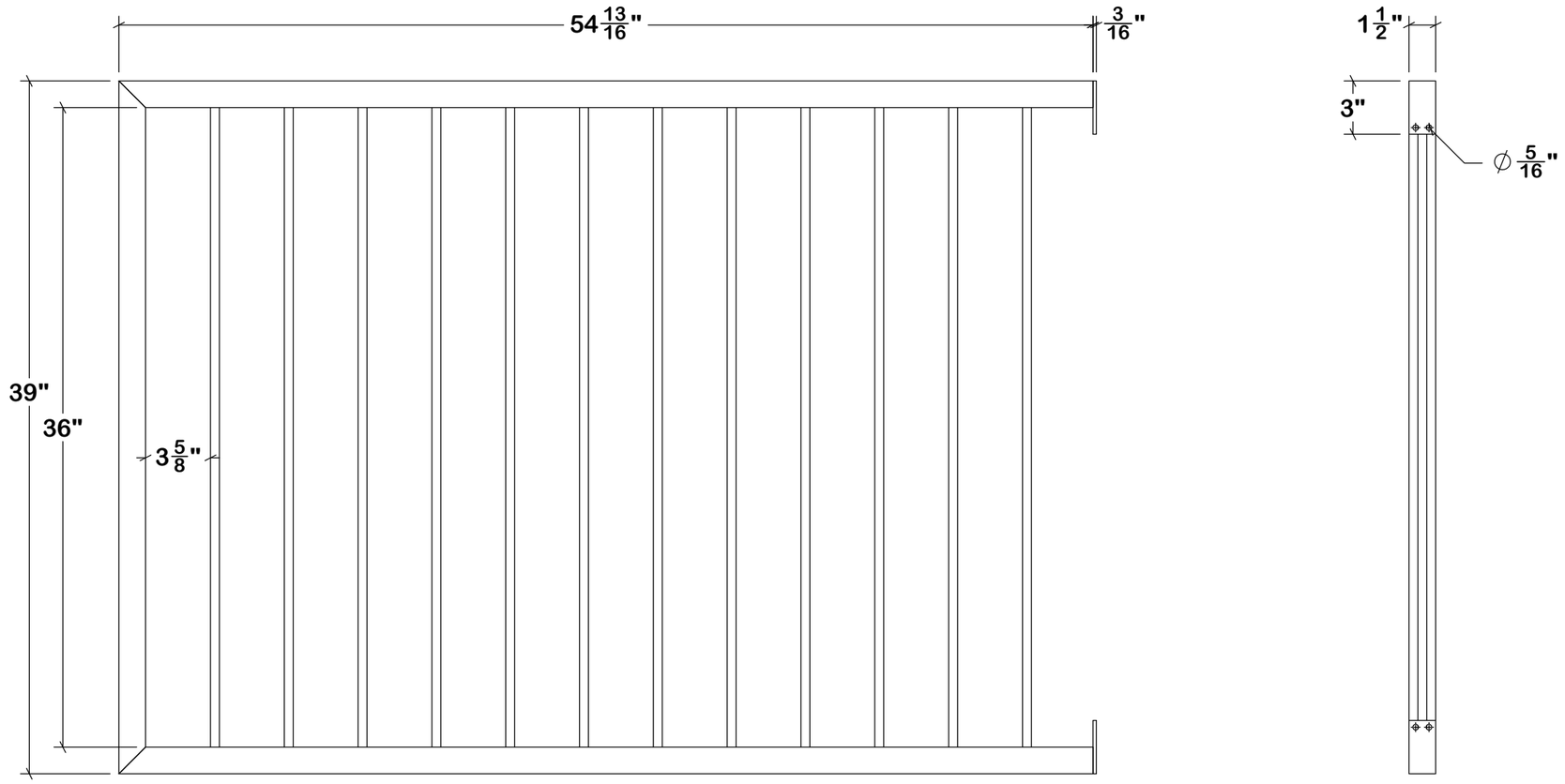

Top & Bottom Guardrail - Label "299-LR" - Qty (2)

Index	Date	Description	By

Mile High Metal Works, Inc.
7399 Miller Court, Unit A, Frederick, CO 80504
Office 303-485-8283 Fax 303-485-8206

Project Name:	Description:	Date:	Color:	By:	Drawing:
Wood Partners - Alta Flatirons	Pre-cast Stair Core 2 Fab	1/19/2026	Red Oxide Primed	CBA	F11
		Job #: 480-299		Rev: 0	

T:\480 Alta Flatirons\Solidworks\Stairs\Stair Core 2\Fab\Stair Core 2 Pre-Cast Guardrail Fab

THE INFORMATION CONTAINED IN THIS DRAWING IS THE SOLE PROPERTY OF Mile High Metal Works Inc. ANY REPRODUCTION IN PART OR AS A WHOLE WITHOUT THE WRITTEN PERMISSION OF Mile High Metal Works Inc. IS PROHIBITED.

Materials:
Frame & Spacer: 1 1/2" Sq. 11 Ga. Ts
Wall & Strike Plate: 1/4" PL
4" HD Hinge
1/8" Caps

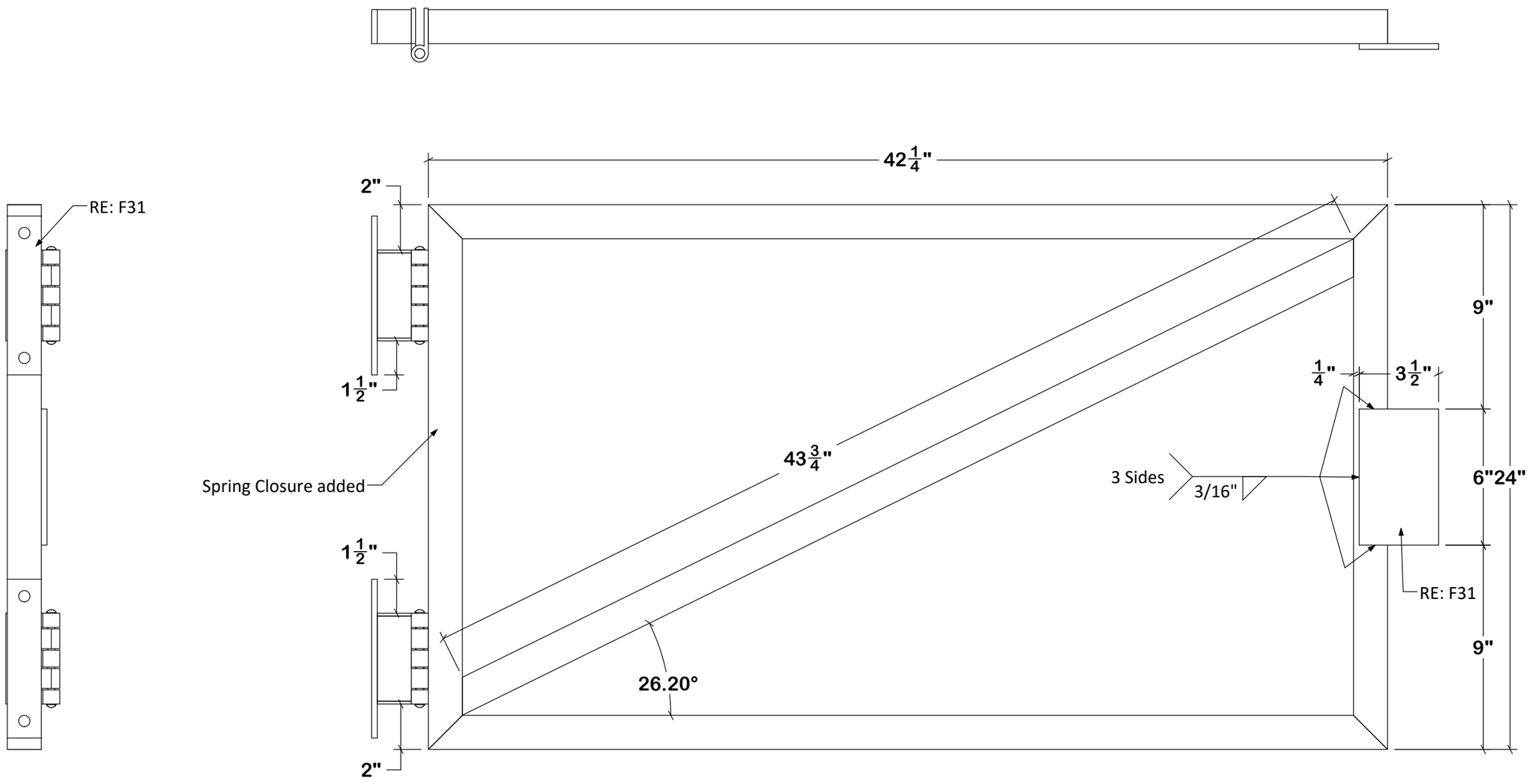

Barrier Gate - Label "299-BG" - Qty (1)

Index	Date	Description	By

Mile High Metal Works, Inc.
7399 Miller Court, Unit A, Frederick, CO 80504
Office 303-485-8283 Fax 303-485-8206

Project Name:	Description:	Date:	Color:	By:	Drawing:
Wood Partners - Alta Flatirons	Pre-cast Stair Core 2 Fab	1/19/2026	Red Oxide Primed	CBA	F12
		Job #: 480-299		Rev: 0	

T:\480 Alta Flatirons\Solidworks\Stairs\Stair Core 2\Fab\Stair Core 2 Pre-Cast Guardrail Fab

THE INFORMATION CONTAINED IN THIS DRAWING IS THE SOLE PROPERTY OF Mile High Metal Works Inc. ANY REPRODUCTION IN PART OR AS A WHOLE WITHOUT THE WRITTEN PERMISSION OF Mile High Metal Works Inc. IS PROHIBITED.

Material:
1 1/4" SCH 10 Pipe
1/8" Caps

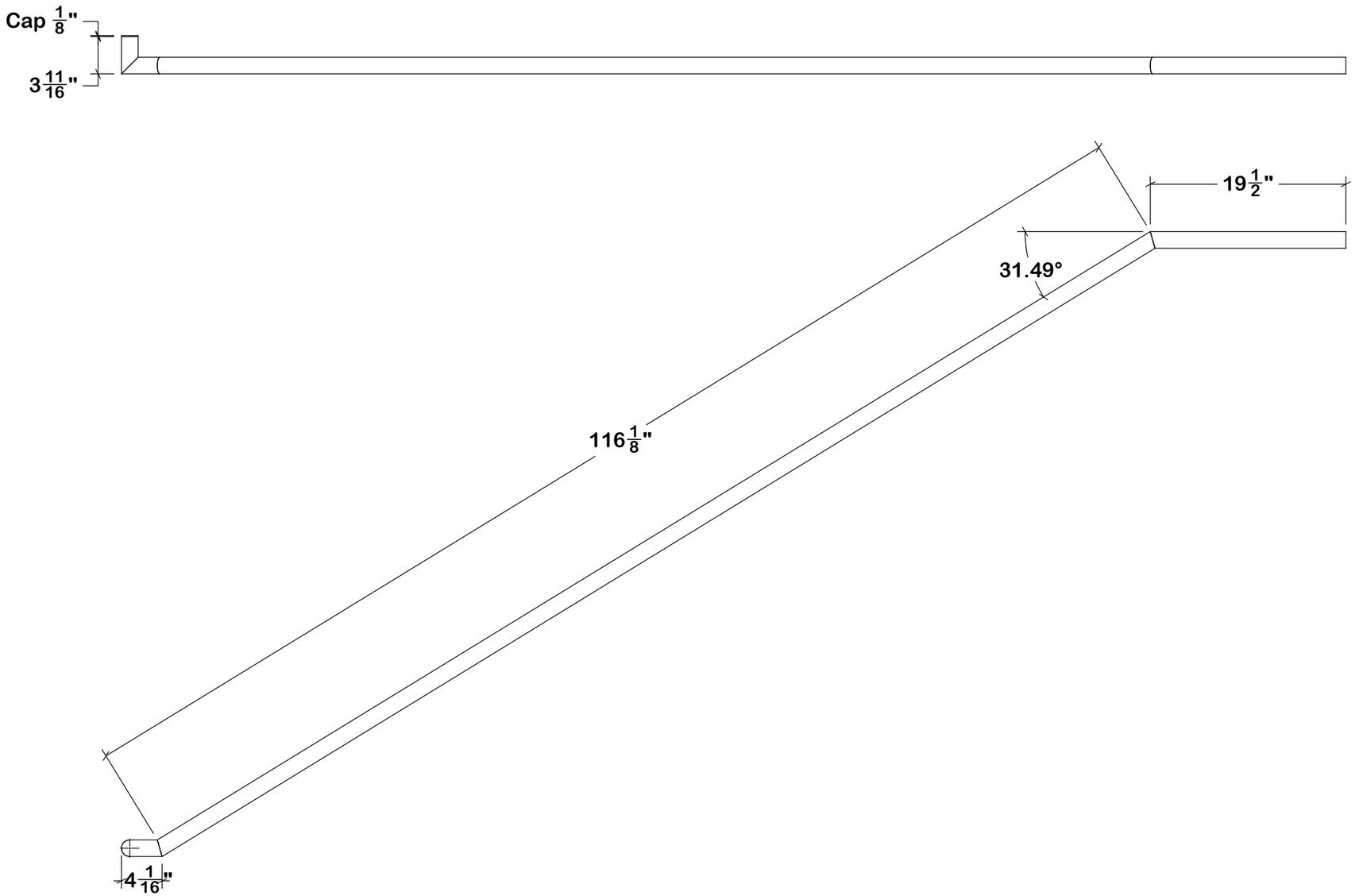

Hand Grab 1 - Label "299-HG1" - Qty (1)

Index	Date	Description	By

Mile High Metal Works, Inc.
7399 Miller Court, Unit A, Frederick, CO 80504
Office 303-485-8283 Fax 303-485-8206

Project Name:	Description:	Date:	Color:	By:	Drawing:
Wood Partners - Alta Flatirons	Pre-cast Stair Core 2 Fab	1/19/2026	Red Oxide Primed	CBA	F13
		Job #: 480-299		Rev: 0	

T:\480 Alta Flatirons\Solidworks\Stairs\Stair Core 2\Fab\Stair Core 2 Pre-Cast Guardrail Fab

THE INFORMATION CONTAINED IN THIS DRAWING IS THE SOLE PROPERTY OF Mile High Metal Works Inc. ANY REPRODUCTION IN PART OR AS A WHOLE WITHOUT THE WRITTEN PERMISSION OF Mile High Metal Works Inc. IS PROHIBITED.

Material:
1 1/4" SCH 10 Pipe
1/8" Caps

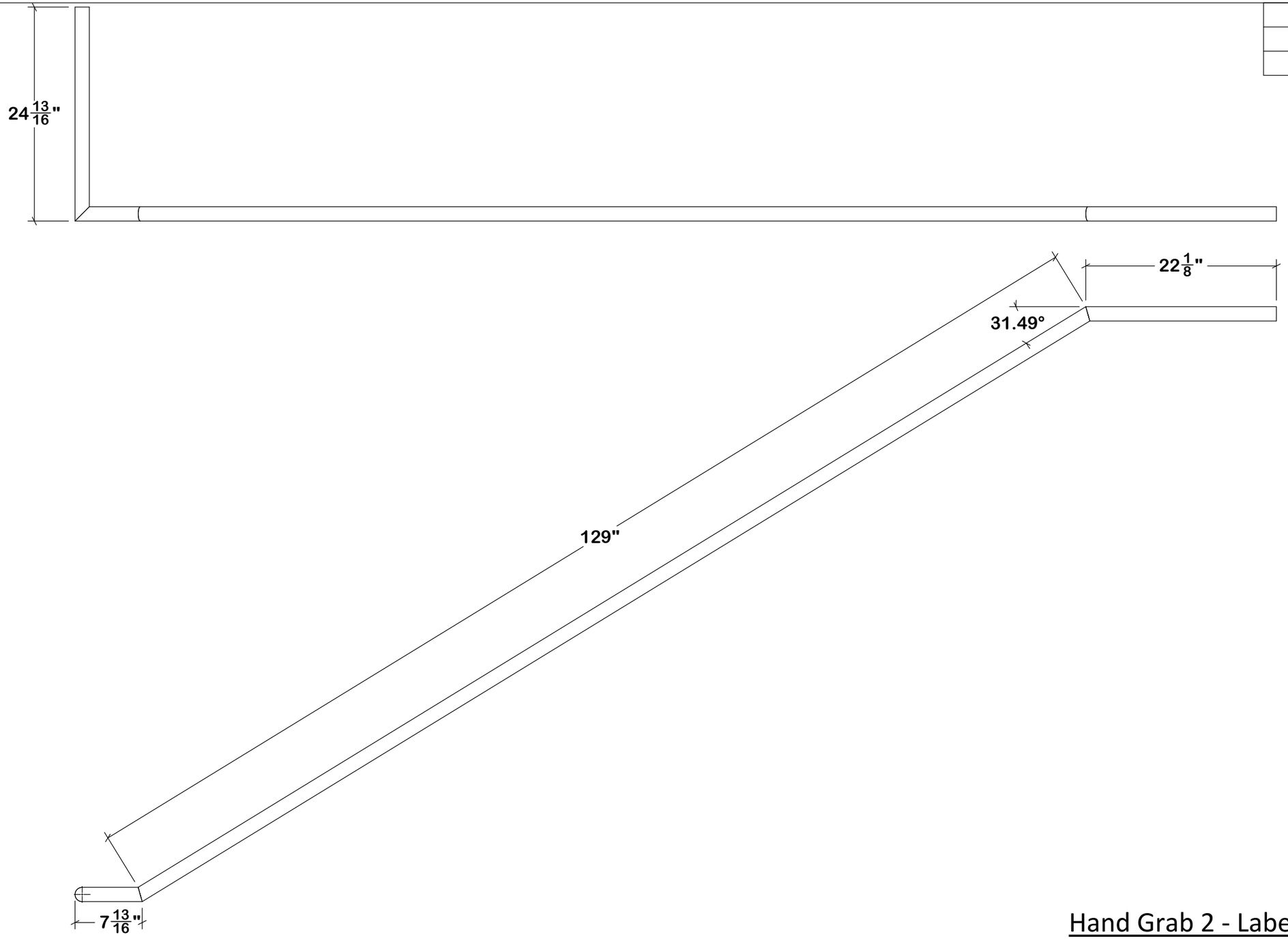

Hand Grab 2 - Label "299-HG2" - Qty (1)

Index	Date	Description	By

Mile High Metal Works, Inc.
7399 Miller Court, Unit A, Frederick, CO 80504
Office 303-485-8283 Fax 303-485-8206

Project Name:	Description:	Date:	Color:	By:	Drawing:
Wood Partners - Alta Flatirons	Pre-cast Stair Core 2 Fab	1/19/2026	Red Oxide Primed	CBA	F14
		Job #: 480-299		Rev: 0	

T:\480 Alta Flatirons\Solidworks\Stairs\Stair Core 2\Fab\Stair Core 2 Pre-Cast Guardrail Fab

THE INFORMATION CONTAINED IN THIS DRAWING IS THE SOLE PROPERTY OF Mile High Metal Works Inc. ANY REPRODUCTION IN PART OR AS A WHOLE WITHOUT THE WRITTEN PERMISSION OF Mile High Metal Works Inc. IS PROHIBITED.

Material:
1 1/4" SCH 10 Pipe
1/8" Caps

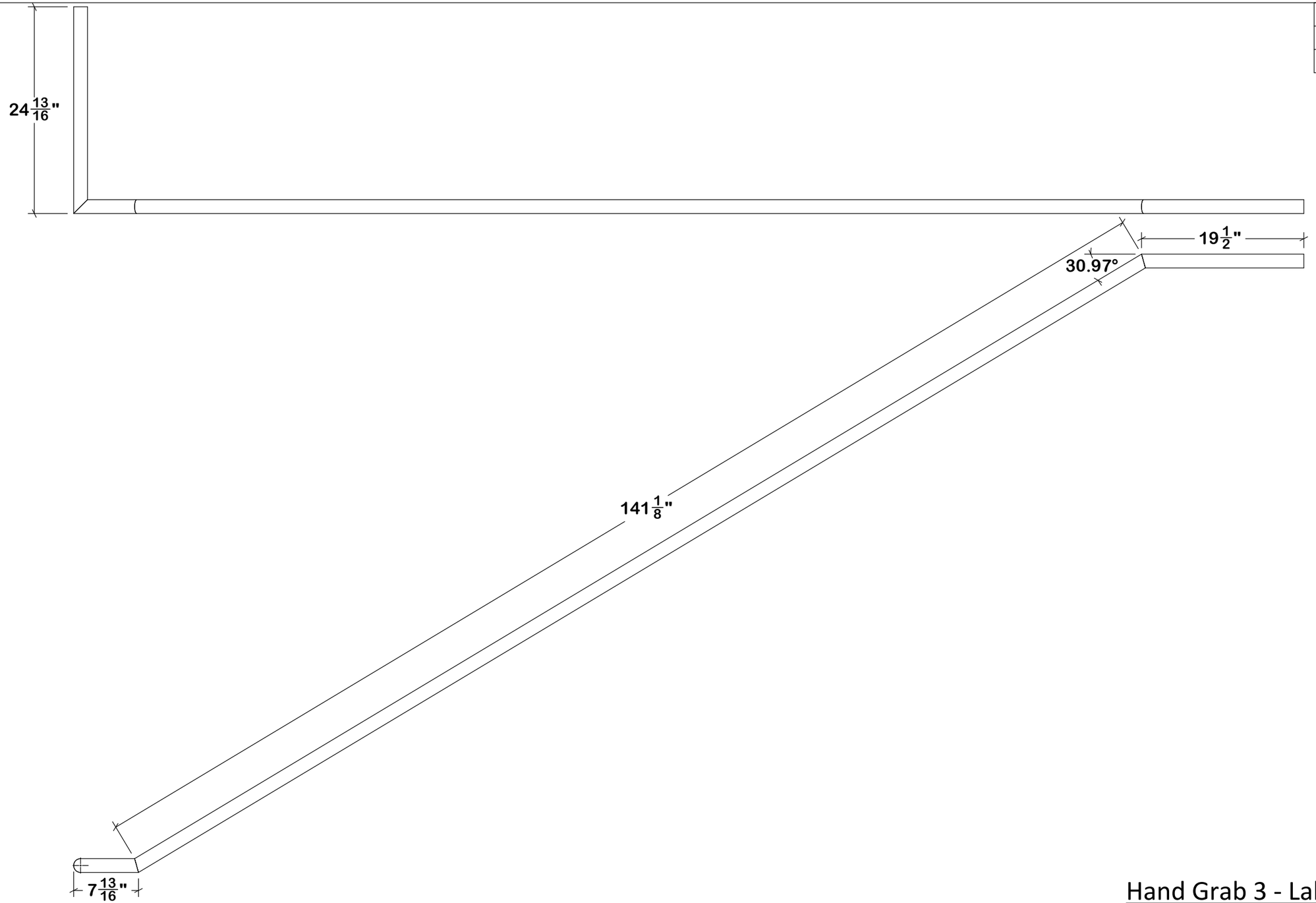

Hand Grab 3 - Label "299-HG3" - Qty (1)

Index	Date	Description	By

Mile High Metal Works, Inc.
7399 Miller Court, Unit A, Frederick, CO 80504
Office 303-485-8283 Fax 303-485-8206

Project Name:	Description:	Date:	Color:	By:	Drawing:
Wood Partners - Alta Flatirons	Pre-cast Stair Core 2 Fab	1/19/2026	Red Oxide Primed	CBA	F15
		Job #: 480-299		Rev: 0	

T:\480 Alta Flatirons\Solidworks\Stairs\Stair Core 2\Fab\Stair Core 2 Pre-Cast Guardrail Fab

THE INFORMATION CONTAINED IN THIS DRAWING IS THE SOLE PROPERTY OF Mile High Metal Works Inc. ANY REPRODUCTION IN PART OR AS A WHOLE WITHOUT THE WRITTEN PERMISSION OF Mile High Metal Works Inc. IS PROHIBITED.

Material:
1 1/4" SCH 10 Pipe
1/8" Caps

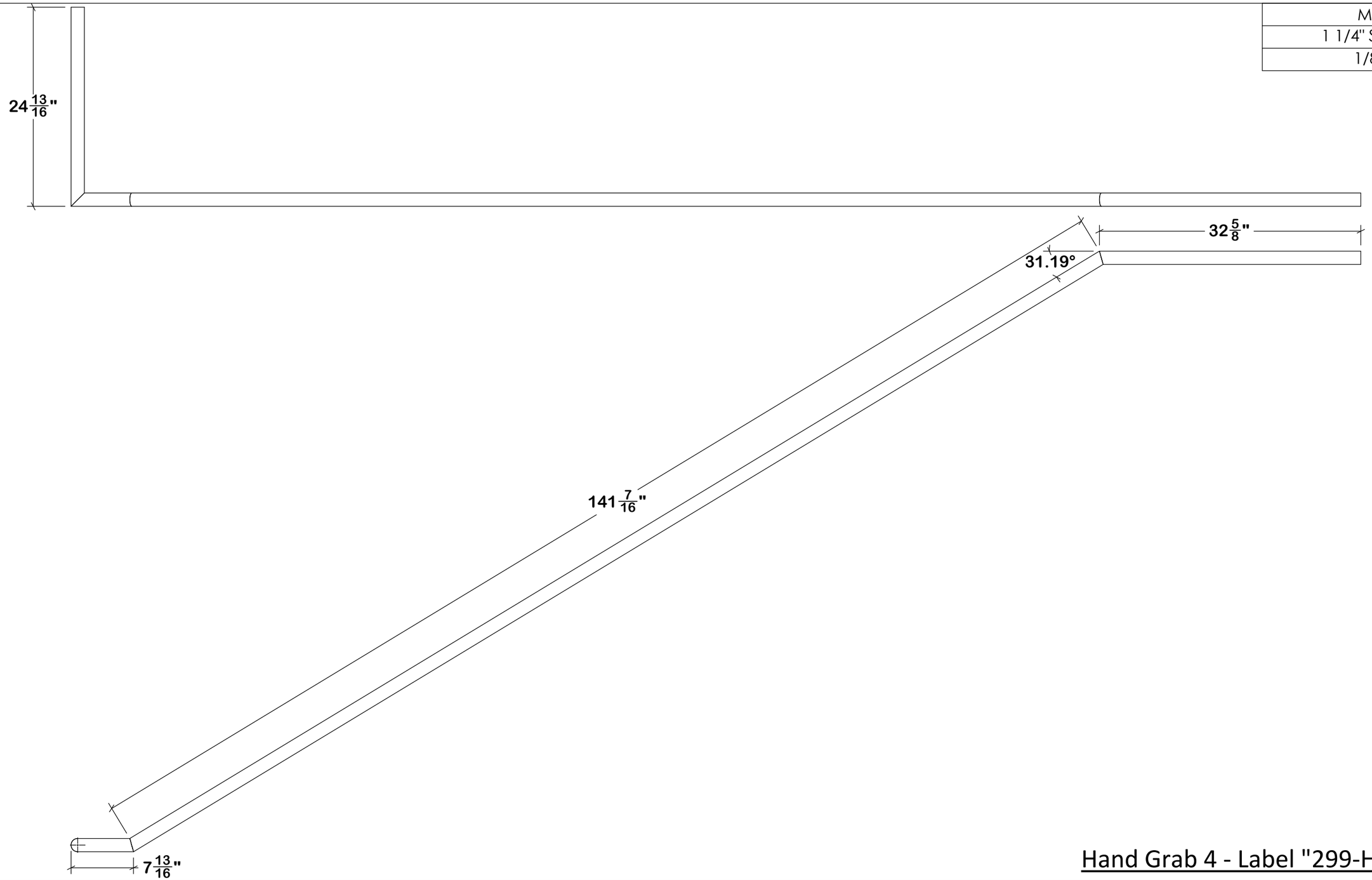

Hand Grab 4 - Label "299-HG4" - Qty (1)

Index	Date	Description	By

Mile High Metal Works, Inc.
7399 Miller Court, Unit A, Frederick, CO 80504
Office 303-485-8283 Fax 303-485-8206

Project Name:	Description:	Date:	Color:	By:	Drawing:
Wood Partners - Alta Flatirons	Pre-cast Stair Core 2 Fab	1/19/2026	Red Oxide Primed	CBA	F16
		Job #: 480-299		Rev: 0	

T:\480 Alta Flatirons\Solidworks\Stairs\Stair Core 2\Fab\Stair Core 2 Pre-Cast Guardrail Fab

THE INFORMATION CONTAINED IN THIS DRAWING IS THE SOLE PROPERTY OF Mile High Metal Works Inc. ANY REPRODUCTION IN PART OR AS A WHOLE WITHOUT THE WRITTEN PERMISSION OF Mile High Metal Works Inc. IS PROHIBITED.

Material:
1 1/4" SCH 10 Pipe
1/8" Caps

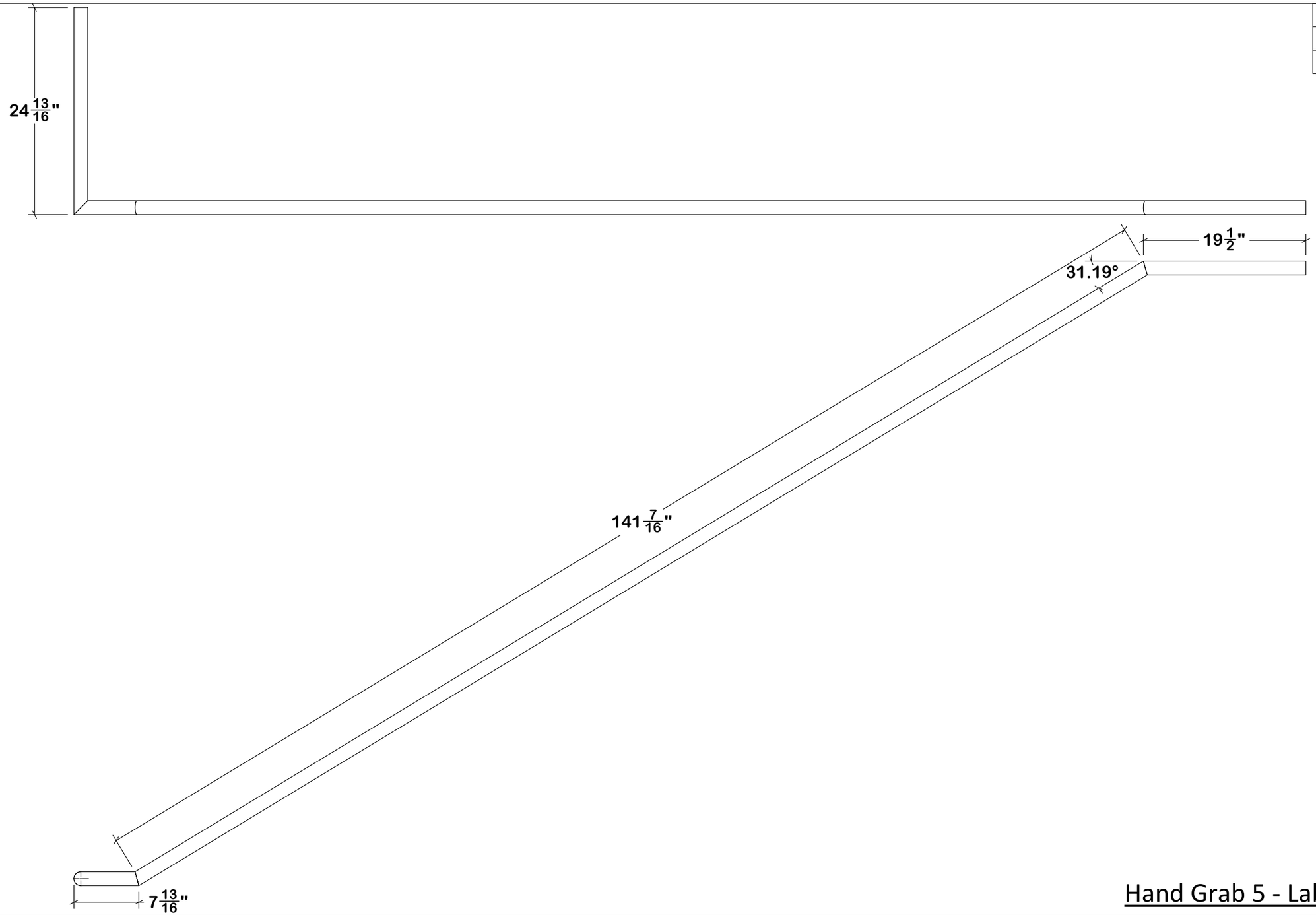

Hand Grab 5 - Label "299-HG5" - Qty (1)

T:\480 Alta Flatirons\Solidworks\Stairs\Stair Core 2\Fab\Stair Core 2 Pre-Cast Guardrail Fab

Index	Date	Description	By

Mile High Metal Works, Inc.
7399 Miller Court, Unit A, Frederick, CO 80504
Office 303-485-8283 Fax 303-485-8206

Project Name:	Description:	Date:	Color:	By:	Drawing:
Wood Partners - Alta Flatirons	Pre-cast Stair Core 2 Fab	1/19/2026	Red Oxide Primed	CBA	F17
		Job #: 480-299		Rev: 0	

THE INFORMATION CONTAINED IN THIS DRAWING IS THE SOLE PROPERTY OF Mile High Metal Works Inc. ANY REPRODUCTION IN PART OR AS A WHOLE WITHOUT THE WRITTEN PERMISSION OF Mile High Metal Works Inc. IS PROHIBITED.

Material:
1 1/4" SCH 10 Pipe
1/8" Caps

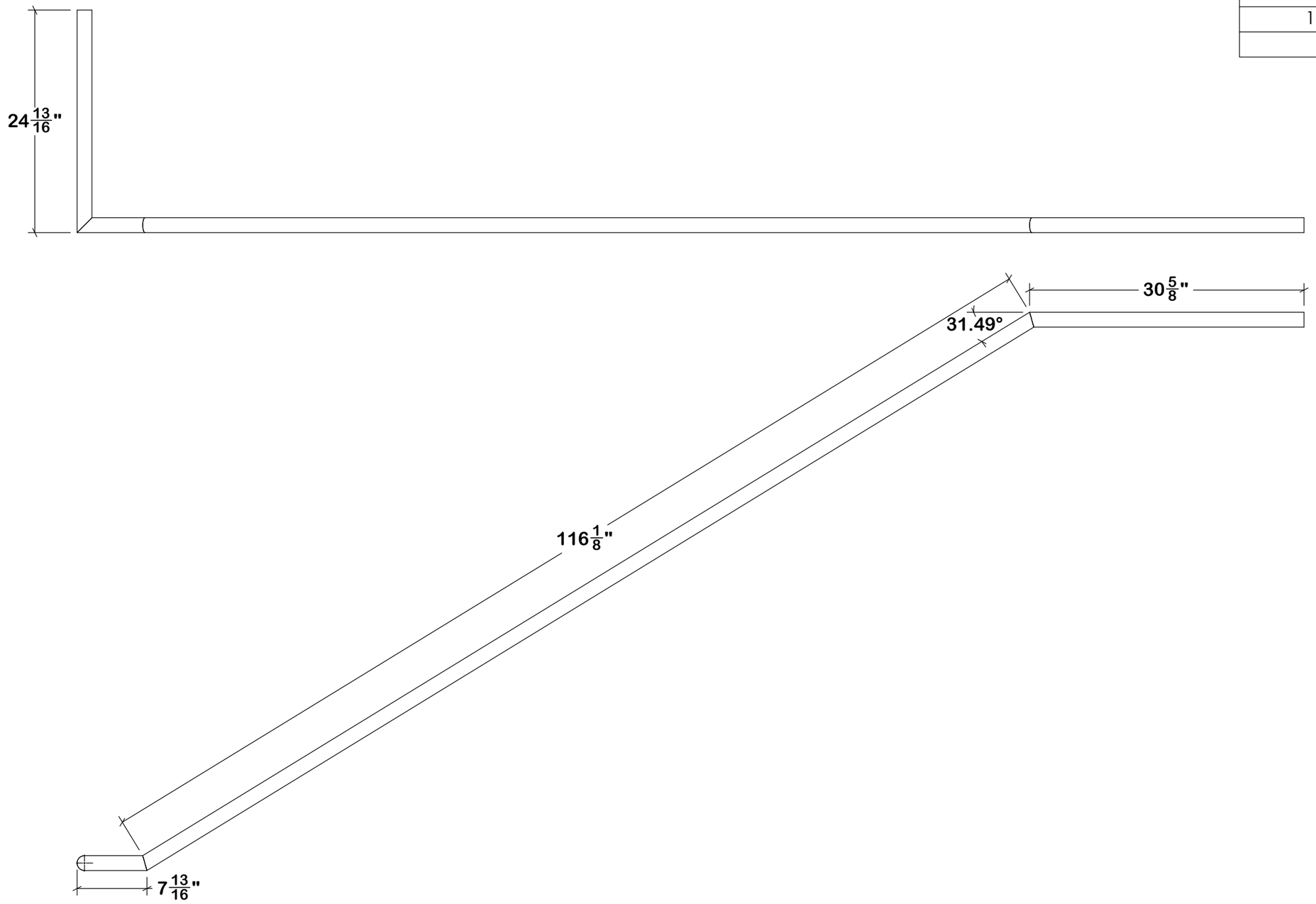

Hand Grab 6 - Label "299-HG6" - Qty (1)

Index	Date	Description	By

Mile High Metal Works, Inc.
7399 Miller Court, Unit A, Frederick, CO 80504
Office 303-485-8283 Fax 303-485-8206

Project Name:	Description:	Date:	Color:	By:	Drawing:
Wood Partners - Alta Flatirons	Pre-cast Stair Core 2 Fab	1/19/2026	Red Oxide Primed	CBA	F18
		Job #: 480-299		Rev: 0	

T:\480 Alta Flatirons\Solidworks\Stairs\Stair Core 2\Fab\Stair Core 2 Pre-Cast Guardrail Fab

THE INFORMATION CONTAINED IN THIS DRAWING IS THE SOLE PROPERTY OF Mile High Metal Works Inc. ANY REPRODUCTION IN PART OR AS A WHOLE WITHOUT THE WRITTEN PERMISSION OF Mile High Metal Works Inc. IS PROHIBITED.

Material:
1 1/4" SCH 10 Pipe
1/8" Caps

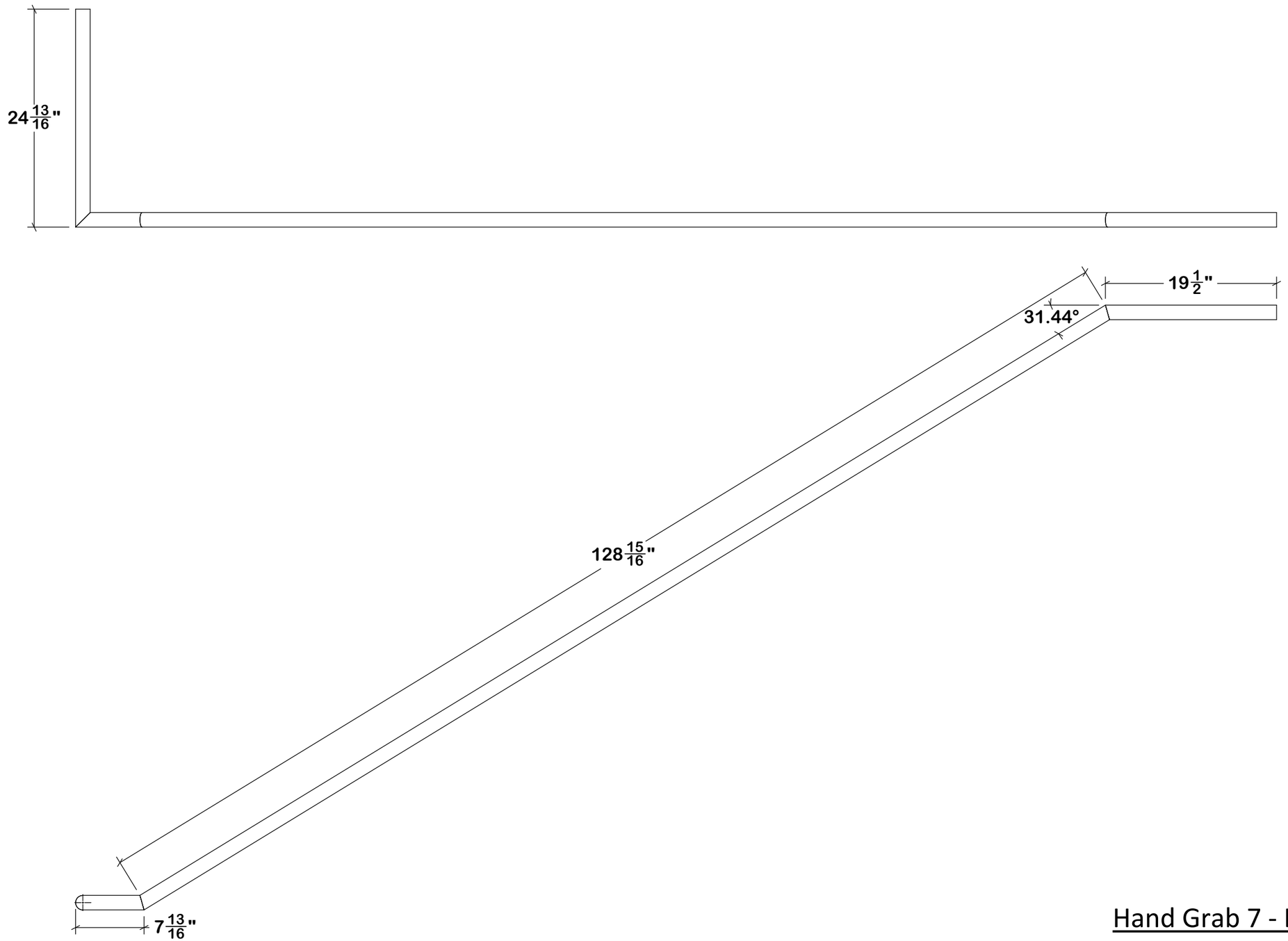

Hand Grab 7 - Label "299-HG7" - Qty (2)

Index	Date	Description	By

Mile High Metal Works, Inc.
7399 Miller Court, Unit A, Frederick, CO 80504
Office 303-485-8283 Fax 303-485-8206

Project Name:	Description:	Date:	Color:	By:	Drawing:
Wood Partners - Alta Flatirons	Pre-cast Stair Core 2 Fab	1/19/2026	Red Oxide Primed	CBA	F19
		Job #: 480-299		Rev: 0	

T:\480 Alta Flatirons\Solidworks\Stairs\Stair Core 2\Fab\Stair Core 2 Pre-Cast Guardrail Fab

THE INFORMATION CONTAINED IN THIS DRAWING IS THE SOLE PROPERTY OF Mile High Metal Works Inc. ANY REPRODUCTION IN PART OR AS A WHOLE WITHOUT THE WRITTEN PERMISSION OF Mile High Metal Works Inc. IS PROHIBITED.

Material:
1 1/4" SCH 10 Pipe
1/8" Caps

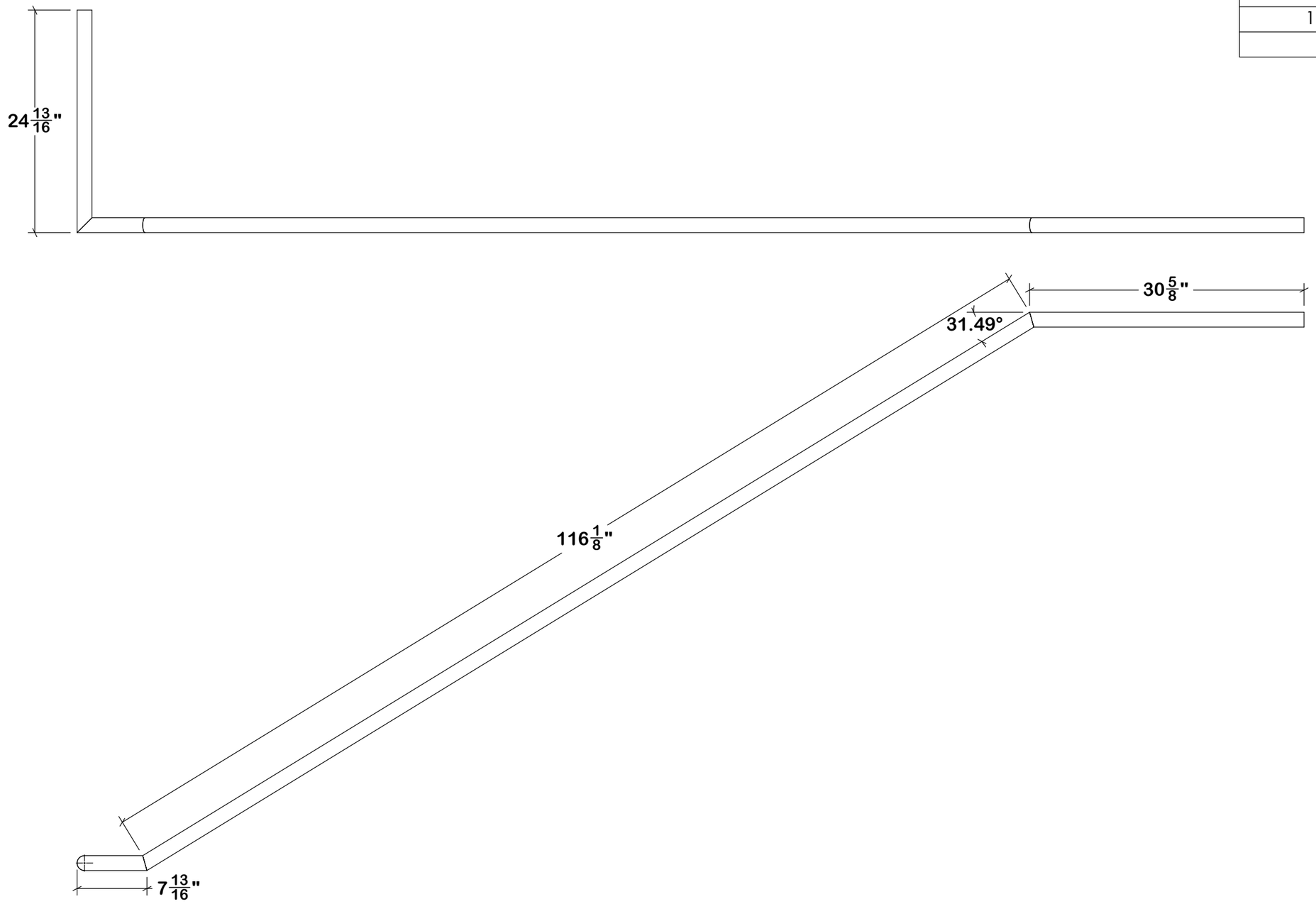

Hand Grab 8 - Label "299-HG8" - Qty (2)

Index	Date	Description	By

Mile High Metal Works, Inc.
7399 Miller Court, Unit A, Frederick, CO 80504
Office 303-485-8283 Fax 303-485-8206

Project Name:	Description:	Date:	Color:	By:	Drawing:
Wood Partners - Alta Flatirons	Pre-cast Stair Core 2 Fab	1/19/2026	Red Oxide Primed	CBA	F20
		Job #: 480-299		Rev: 0	

T:\480 Alta Flatirons\Solidworks\Stairs\Stair Core 2\Fab\Stair Core 2 Pre-Cast Guardrail Fab

THE INFORMATION CONTAINED IN THIS DRAWING IS THE SOLE PROPERTY OF Mile High Metal Works Inc. ANY REPRODUCTION IN PART OR AS A WHOLE WITHOUT THE WRITTEN PERMISSION OF Mile High Metal Works Inc. IS PROHIBITED.

Material:
1 1/4" SCH 10 Pipe
1/8" Caps

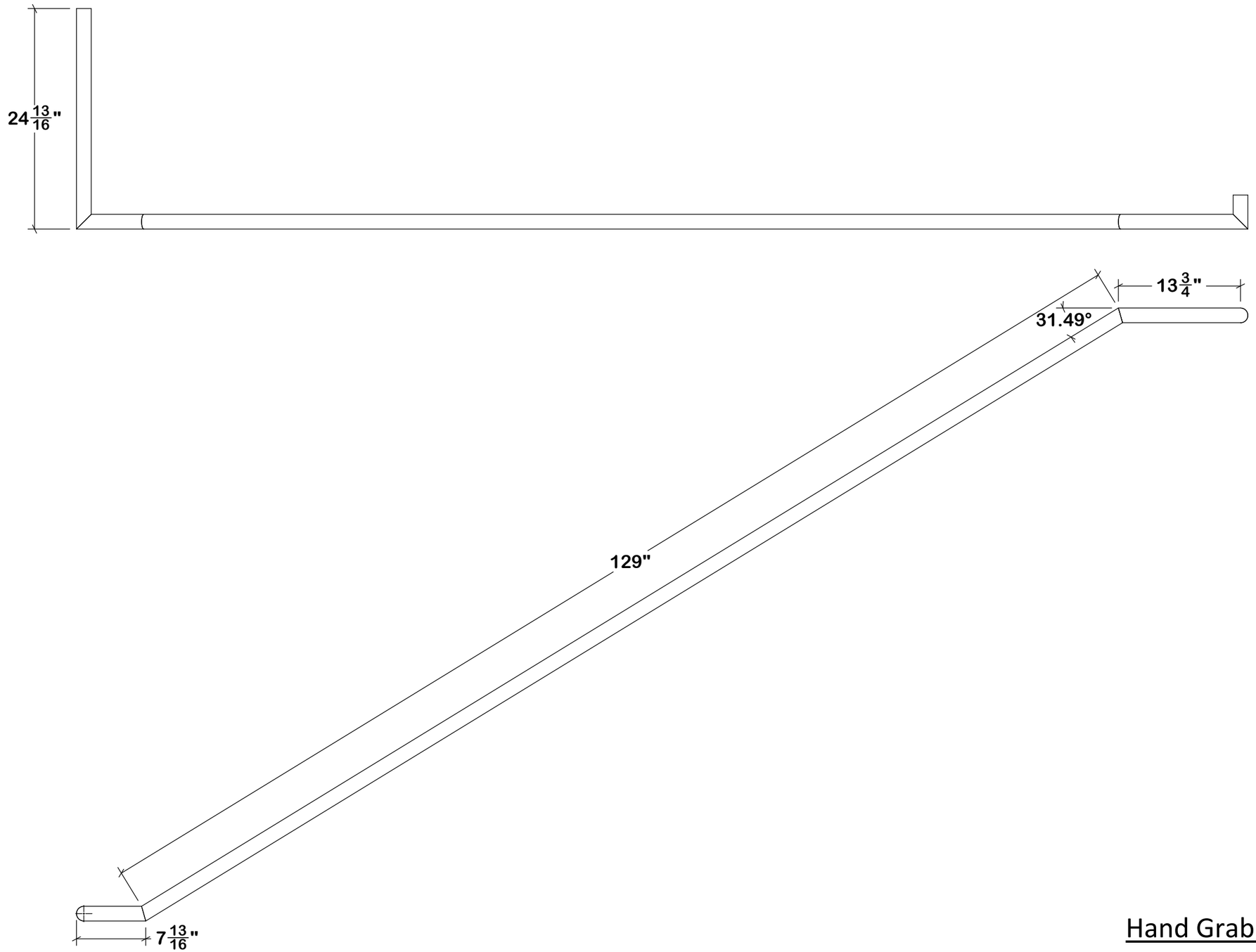

Hand Grab 9 - Label "299-HG9" - Qty (1)

Index	Date	Description	By

Mile High Metal Works, Inc.
7399 Miller Court, Unit A, Frederick, CO 80504
Office 303-485-8283 Fax 303-485-8206

Project Name:	Description:	Date:	Color:	By:	Drawing:
Wood Partners - Alta Flatirons	Pre-cast Stair Core 2 Fab	1/19/2026	Red Oxide Primed	CBA	F21
		Job #: 480-299		Rev: 0	

T:\480 Alta Flatirons\Solidworks\Stairs\Stair Core 2\Fab\Stair Core 2 Pre-Cast Guardrail Fab

THE INFORMATION CONTAINED IN THIS DRAWING IS THE SOLE PROPERTY OF Mile High Metal Works Inc. ANY REPRODUCTION IN PART OR AS A WHOLE WITHOUT THE WRITTEN PERMISSION OF Mile High Metal Works Inc. IS PROHIBITED.

Material:
1 1/4" SCH 10 Pipe
1/8" Caps

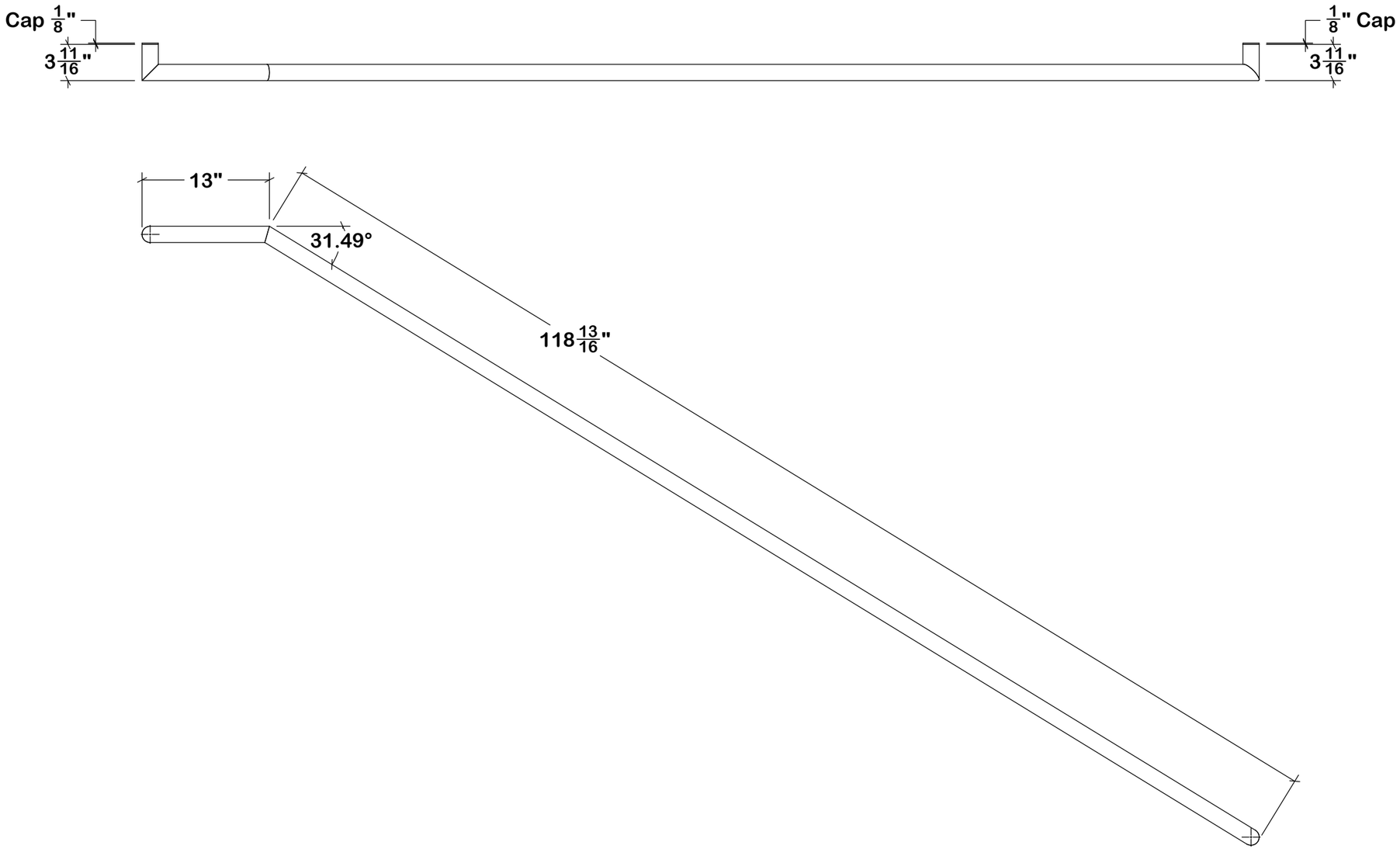

Wall Grab 1 - Label "299-WG1" - Qty (1)

Index	Date	Description	By

Mile High Metal Works, Inc.
7399 Miller Court, Unit A, Frederick, CO 80504
Office 303-485-8283 Fax 303-485-8206

Project Name:	Description:	Date:	Color:	By:	Drawing:
Wood Partners - Alta Flatirons	Pre-cast Stair Core 2 Fab	1/19/2026	Red Oxide Primed	CBA	F22
		Job #: 480-299		Rev: 0	

T:\480 Alta Flatirons\Solidworks\Stairs\Stair Core 2\Fab\Stair Core 2 Pre-Cast Guardrail Fab

THE INFORMATION CONTAINED IN THIS DRAWING IS THE SOLE PROPERTY OF Mile High Metal Works Inc. ANY REPRODUCTION IN PART OR AS A WHOLE WITHOUT THE WRITTEN PERMISSION OF Mile High Metal Works Inc. IS PROHIBITED.

Material:
1 1/4" SCH 10 Pipe
1/8" Caps

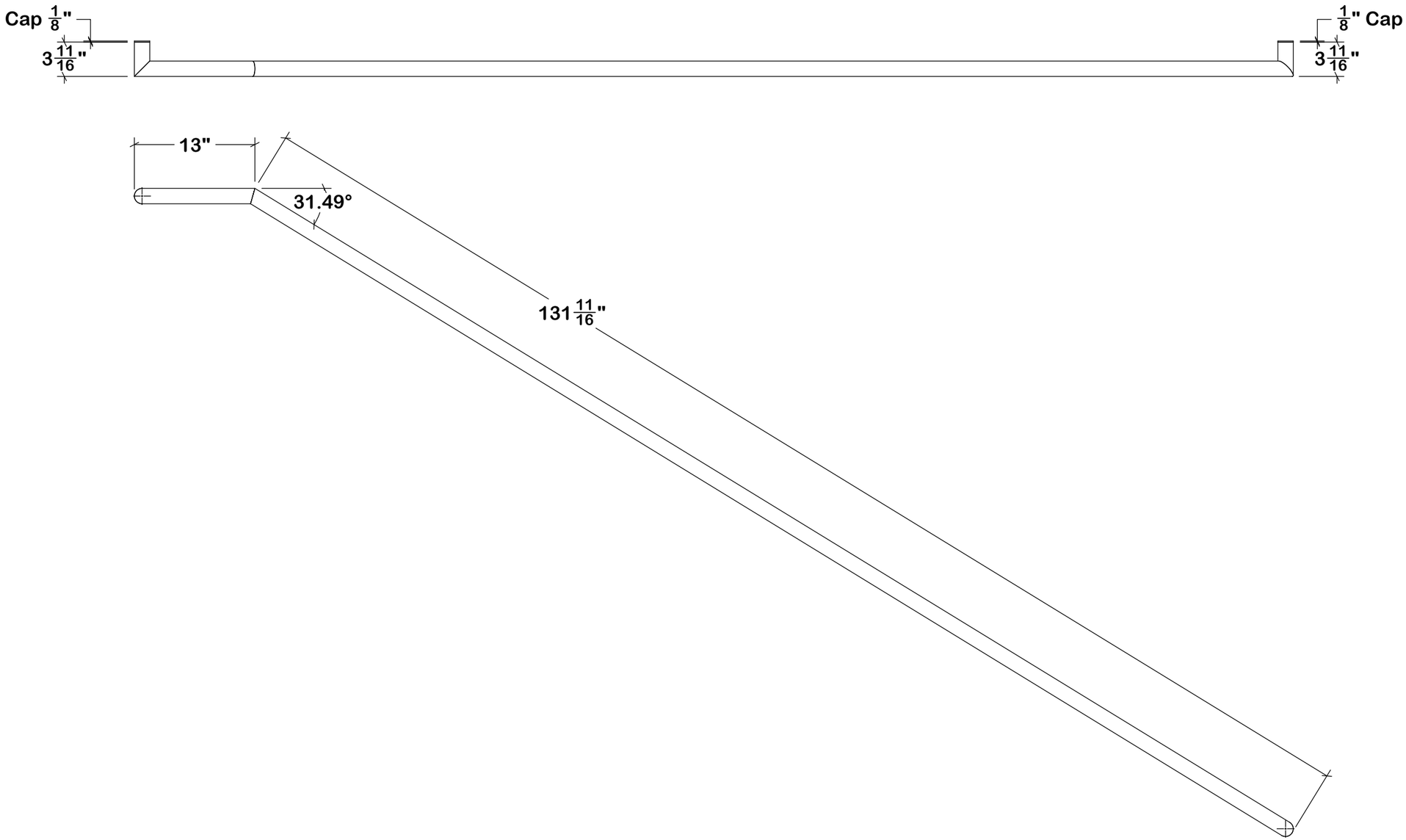

Wall Grab 2 - Label "299-WG2" - Qty (1)

Index	Date	Description	By

Mile High Metal Works, Inc.
7399 Miller Court, Unit A, Frederick, CO 80504
Office 303-485-8283 Fax 303-485-8206

Project Name:	Description:	Date:	Color:	By:	Drawing:
Wood Partners - Alta Flatirons	Pre-cast Stair Core 2 Fab	1/19/2026	Red Oxide Primed	CBA	F23
		Job #: 480-299		Rev: 0	

T:\480 Alta Flatirons\Solidworks\Stairs\Stair Core 2\Fab\Stair Core 2 Pre-Cast Guardrail Fab

THE INFORMATION CONTAINED IN THIS DRAWING IS THE SOLE PROPERTY OF Mile High Metal Works Inc. ANY REPRODUCTION IN PART OR AS A WHOLE WITHOUT THE WRITTEN PERMISSION OF Mile High Metal Works Inc. IS PROHIBITED.

Material:
1 1/4" SCH 10 Pipe
1/8" Caps

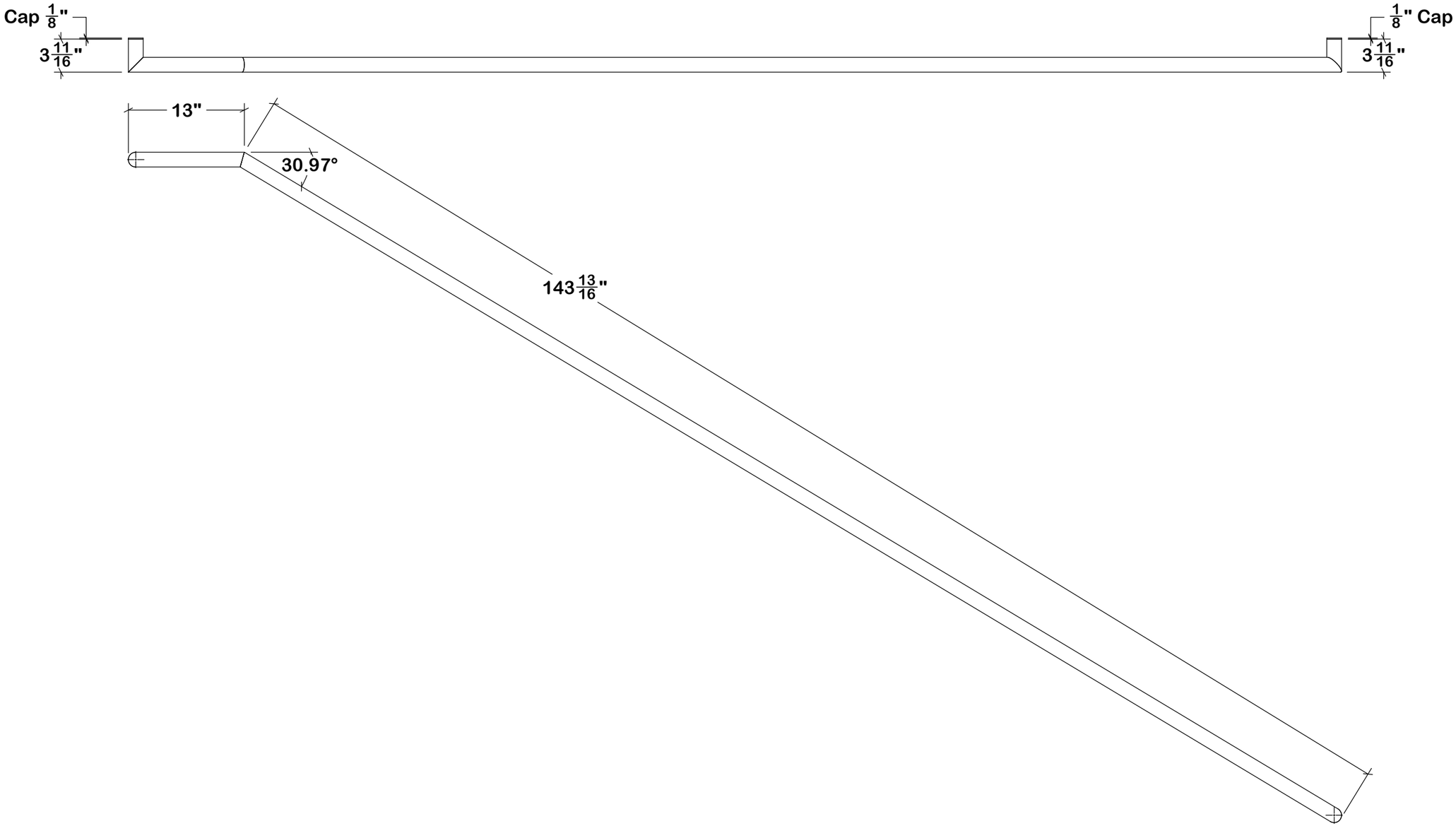

Wall Grab 3 - Label "299-WG3" - Qty (1)

Index	Date	Description	By

Mile High Metal Works, Inc.
7399 Miller Court, Unit A, Frederick, CO 80504
Office 303-485-8283 Fax 303-485-8206

Project Name:	Description:	Date:	Color:	By:	Drawing:
Wood Partners - Alta Flatirons	Pre-cast Stair Core 2 Fab	1/19/2026	Red Oxide Primed	CBA	F24
		Job #: 480-299		Rev: 0	

T:\480 Alta Flatirons\Solidworks\Stairs\Stair Core 2\Fab\Stair Core 2 Pre-Cast Guardrail Fab

THE INFORMATION CONTAINED IN THIS DRAWING IS THE SOLE PROPERTY OF Mile High Metal Works Inc. ANY REPRODUCTION IN PART OR AS A WHOLE WITHOUT THE WRITTEN PERMISSION OF Mile High Metal Works Inc. IS PROHIBITED.

Material:
1 1/4" SCH 10 Pipe
1/8" Caps

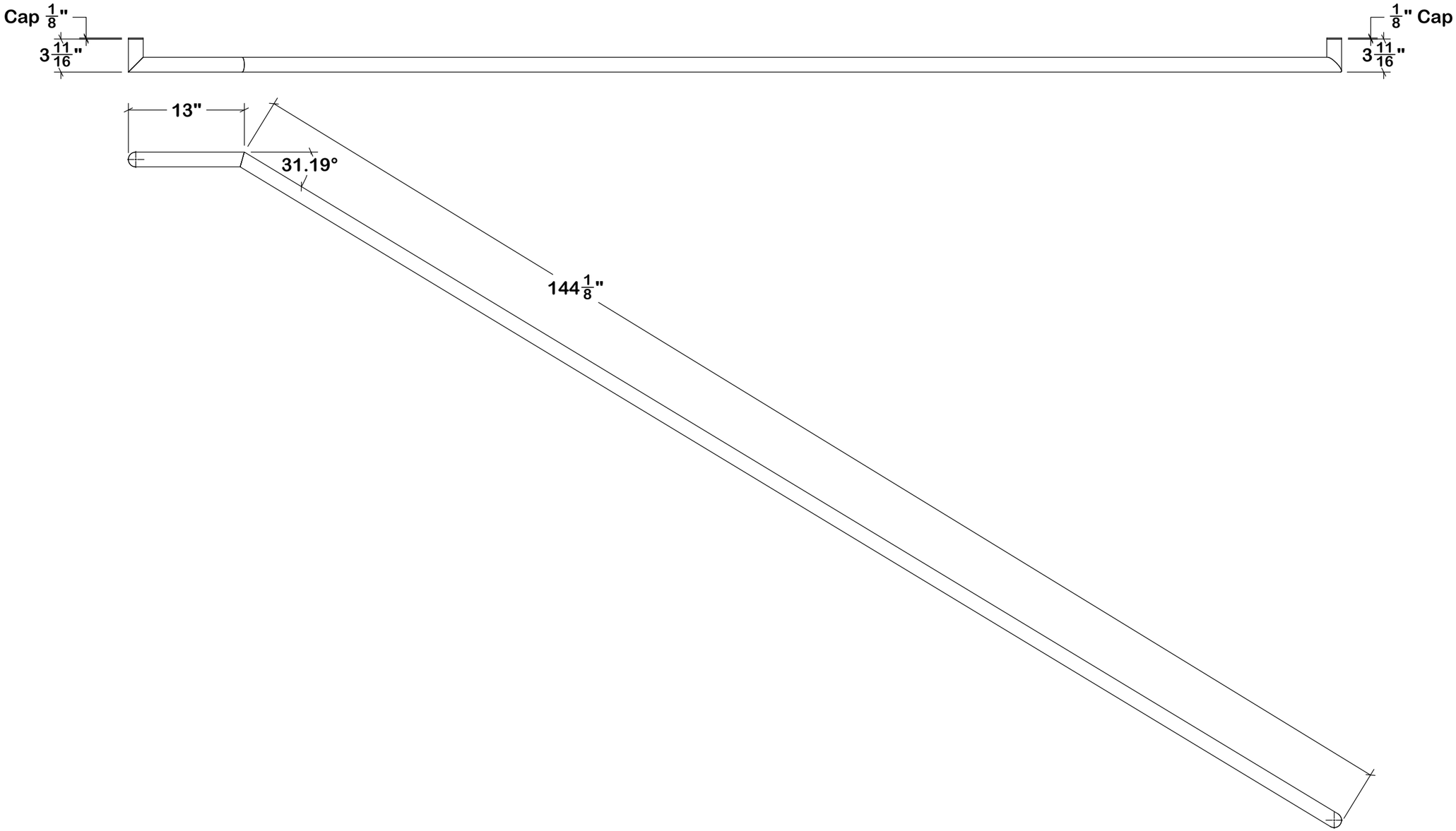

Wall Grab 4 - Label "299-WG4" - Qty (1)

Index	Date	Description	By

Mile High Metal Works, Inc.
7399 Miller Court, Unit A, Frederick, CO 80504
Office 303-485-8283 Fax 303-485-8206

Project Name:	Description:	Date:	Color:	By:	Drawing:
Wood Partners - Alta Flatirons	Pre-cast Stair Core 2 Fab	1/19/2026	Red Oxide Primed	CBA	F25
		Job #: 480-299		Rev: 0	

T:\480 Alta Flatirons\Solidworks\Stairs\Stair Core 2\Fab\Stair Core 2 Pre-Cast Guardrail Fab

THE INFORMATION CONTAINED IN THIS DRAWING IS THE SOLE PROPERTY OF Mile High Metal Works Inc. ANY REPRODUCTION IN PART OR AS A WHOLE WITHOUT THE WRITTEN PERMISSION OF Mile High Metal Works Inc. IS PROHIBITED.

Material:
1 1/4" SCH 10 Pipe
1/8" Caps

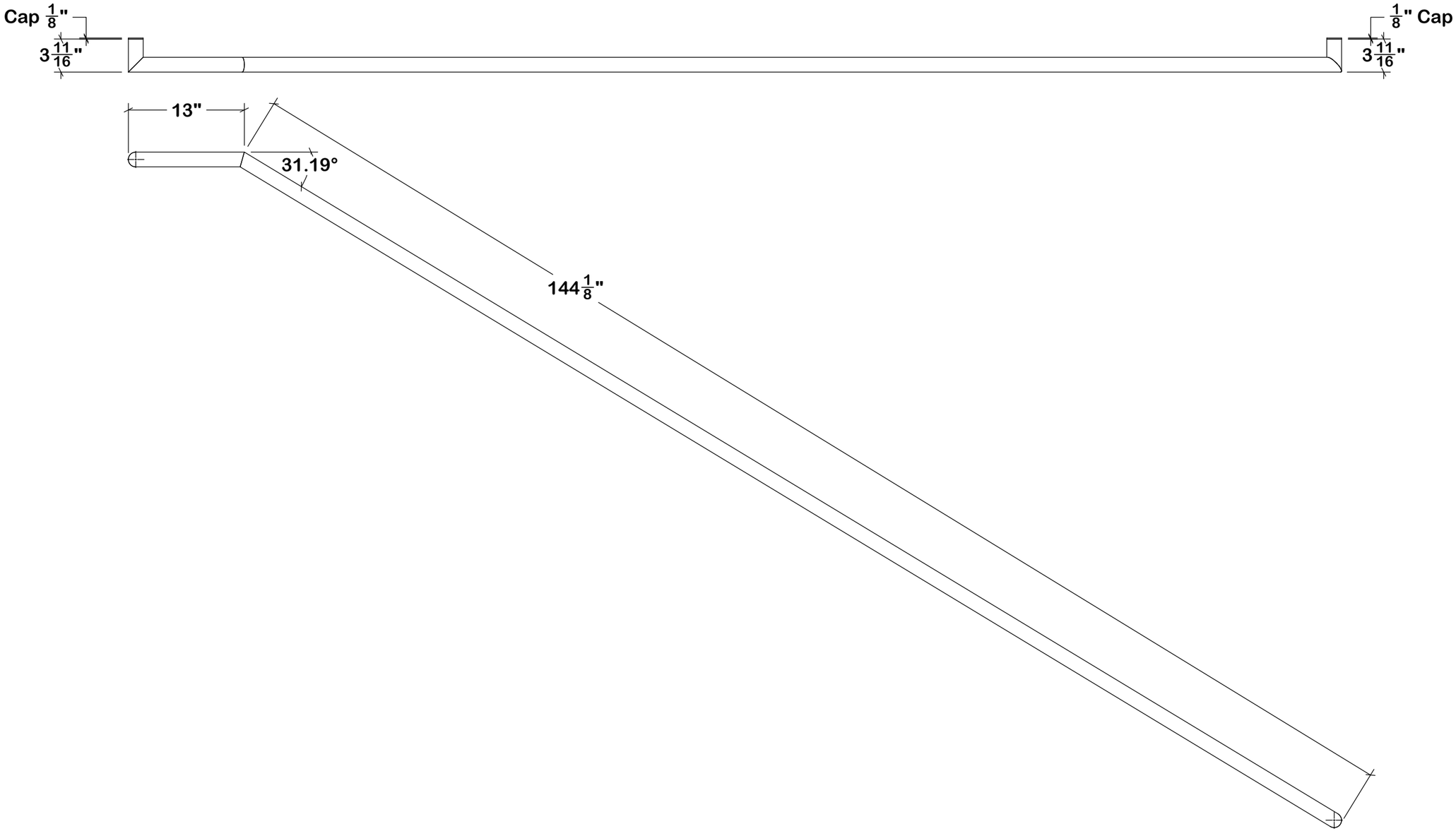

Wall Grab 5 - Label "299-WG5" - Qty (1)

Index	Date	Description	By

Mile High Metal Works, Inc.
7399 Miller Court, Unit A, Frederick, CO 80504
Office 303-485-8283 Fax 303-485-8206

Project Name:	Description:	Date:	Color:	By:	Drawing:
Wood Partners - Alta Flatirons	Pre-cast Stair Core 2 Fab	1/19/2026	Red Oxide Primed	CBA	F26
		Job #: 480-299		Rev: 0	

T:\480 Alta Flatirons\Solidworks\Stairs\Stair Core 2\Fab\Stair Core 2 Pre-Cast Guardrail Fab

THE INFORMATION CONTAINED IN THIS DRAWING IS THE SOLE PROPERTY OF Mile High Metal Works Inc. ANY REPRODUCTION IN PART OR AS A WHOLE WITHOUT THE WRITTEN PERMISSION OF Mile High Metal Works Inc. IS PROHIBITED.

Material:
1 1/4" SCH 10 Pipe
1/8" Caps

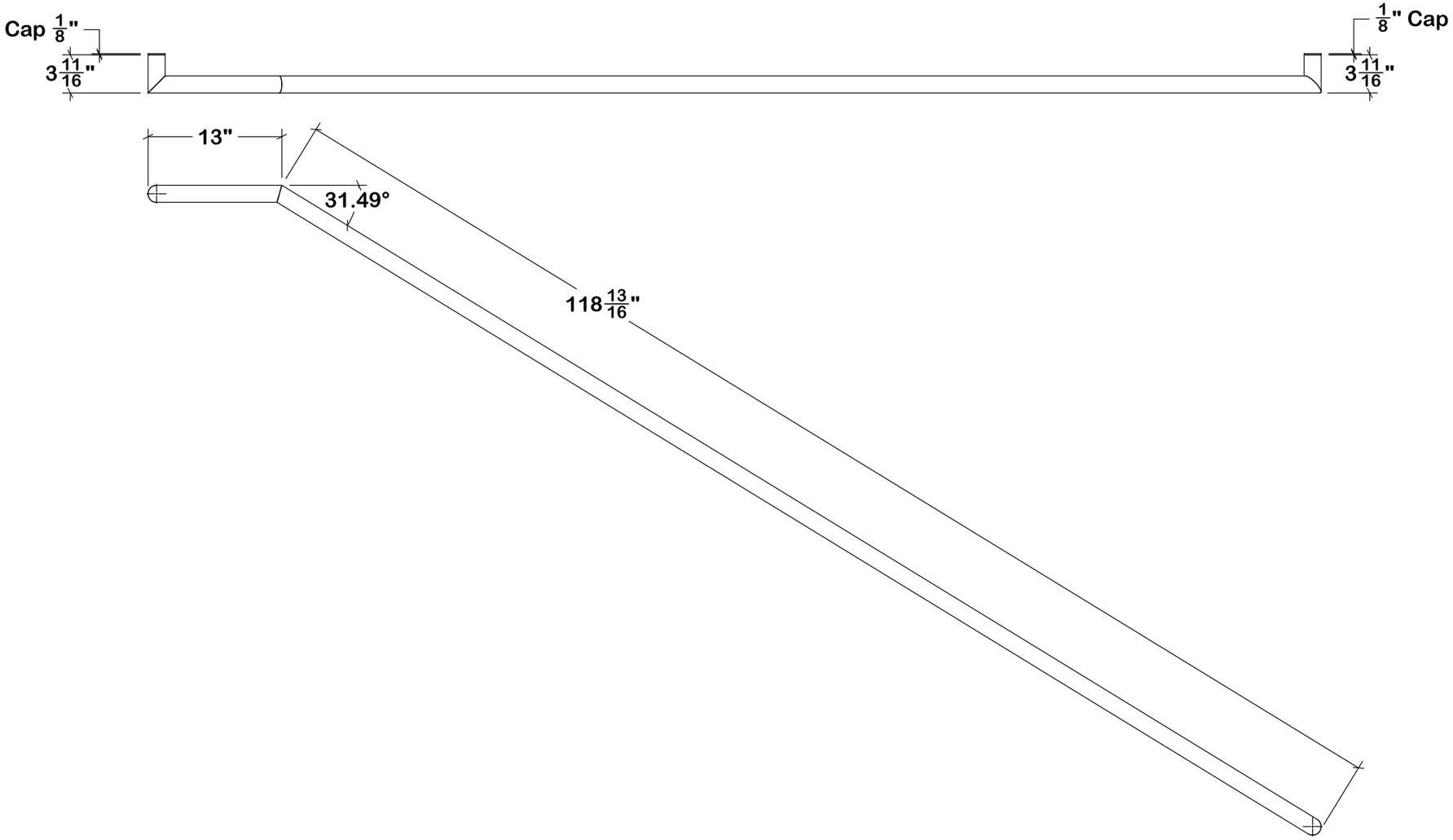

Wall Grab 6 - Label "299-WG6" - Qty (1)

Index	Date	Description	By

Mile High Metal Works, Inc.
7399 Miller Court, Unit A, Frederick, CO 80504
Office 303-485-8283 Fax 303-485-8206

Project Name:	Description:	Date:	Color:	By:	Drawing:
Wood Partners - Alta Flatirons	Pre-cast Stair Core 2 Fab	1/19/2026	Red Oxide Primed	CBA	F27
		Job #: 480-299		Rev: 0	

T:\480 Alta Flatirons\Solidworks\Stairs\Stair Core 2\Fab\Stair Core 2 Pre-Cast Guardrail Fab

THE INFORMATION CONTAINED IN THIS DRAWING IS THE SOLE PROPERTY OF Mile High Metal Works Inc. ANY REPRODUCTION IN PART OR AS A WHOLE WITHOUT THE WRITTEN PERMISSION OF Mile High Metal Works Inc. IS PROHIBITED.

Material:
1 1/4" SCH 10 Pipe
1/8" Caps

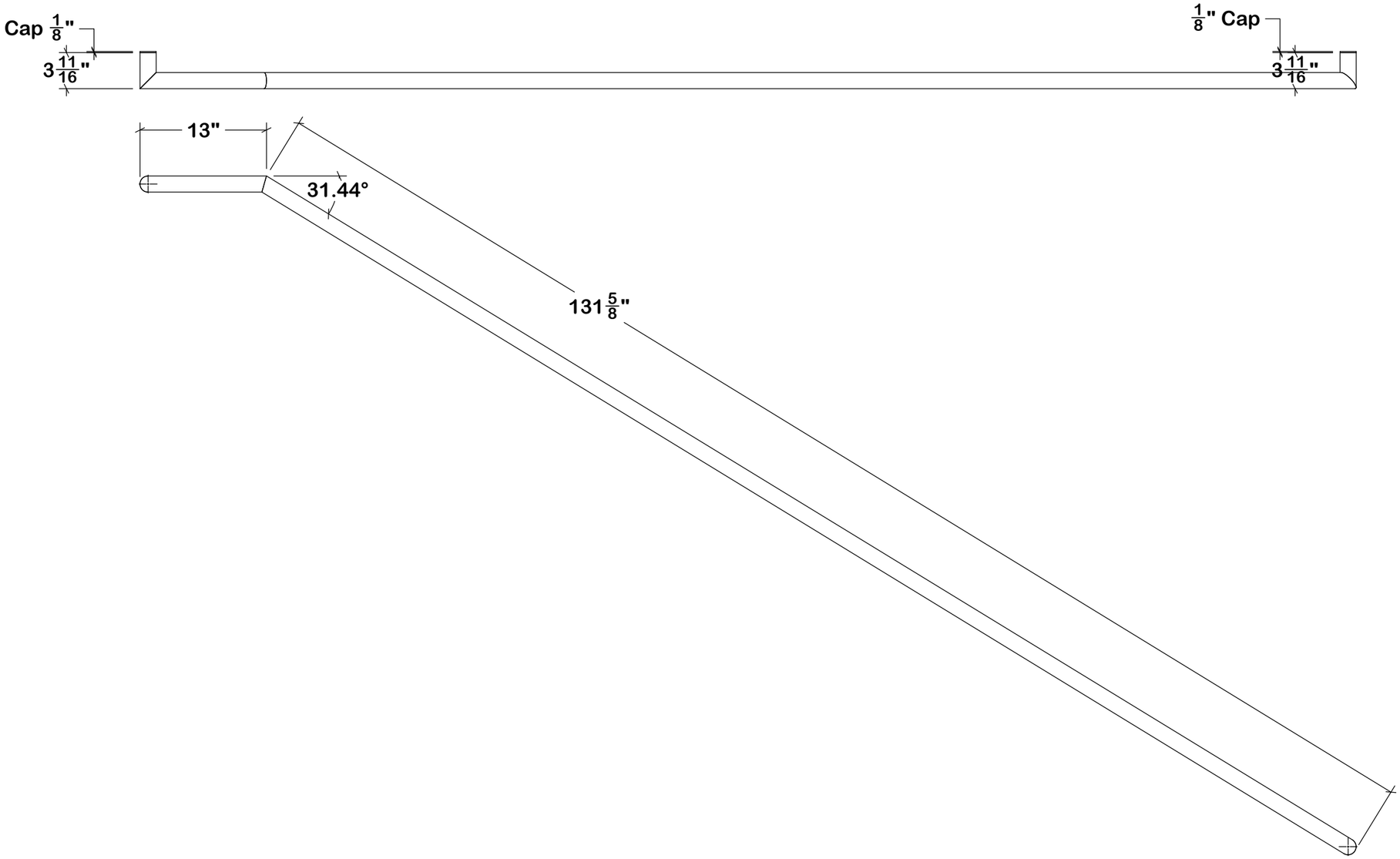

Wall Grab 7 - Label "299-WG7" - Qty (2)

Index	Date	Description	By

Mile High Metal Works, Inc.
7399 Miller Court, Unit A, Frederick, CO 80504
Office 303-485-8283 Fax 303-485-8206

Project Name:	Description:	Date:	Color:	By:	Drawing:
Wood Partners - Alta Flatirons	Pre-cast Stair Core 2 Fab	1/19/2026	Red Oxide Primed	CBA	F28
		Job #: 480-299		Rev: 0	

T:\480 Alta Flatirons\Solidworks\Stairs\Stair Core 2\Fab\Stair Core 2 Pre-Cast Guardrail Fab

THE INFORMATION CONTAINED IN THIS DRAWING IS THE SOLE PROPERTY OF Mile High Metal Works Inc. ANY REPRODUCTION IN PART OR AS A WHOLE WITHOUT THE WRITTEN PERMISSION OF Mile High Metal Works Inc. IS PROHIBITED.

Material:
1 1/4" SCH 10 Pipe
1/8" Caps

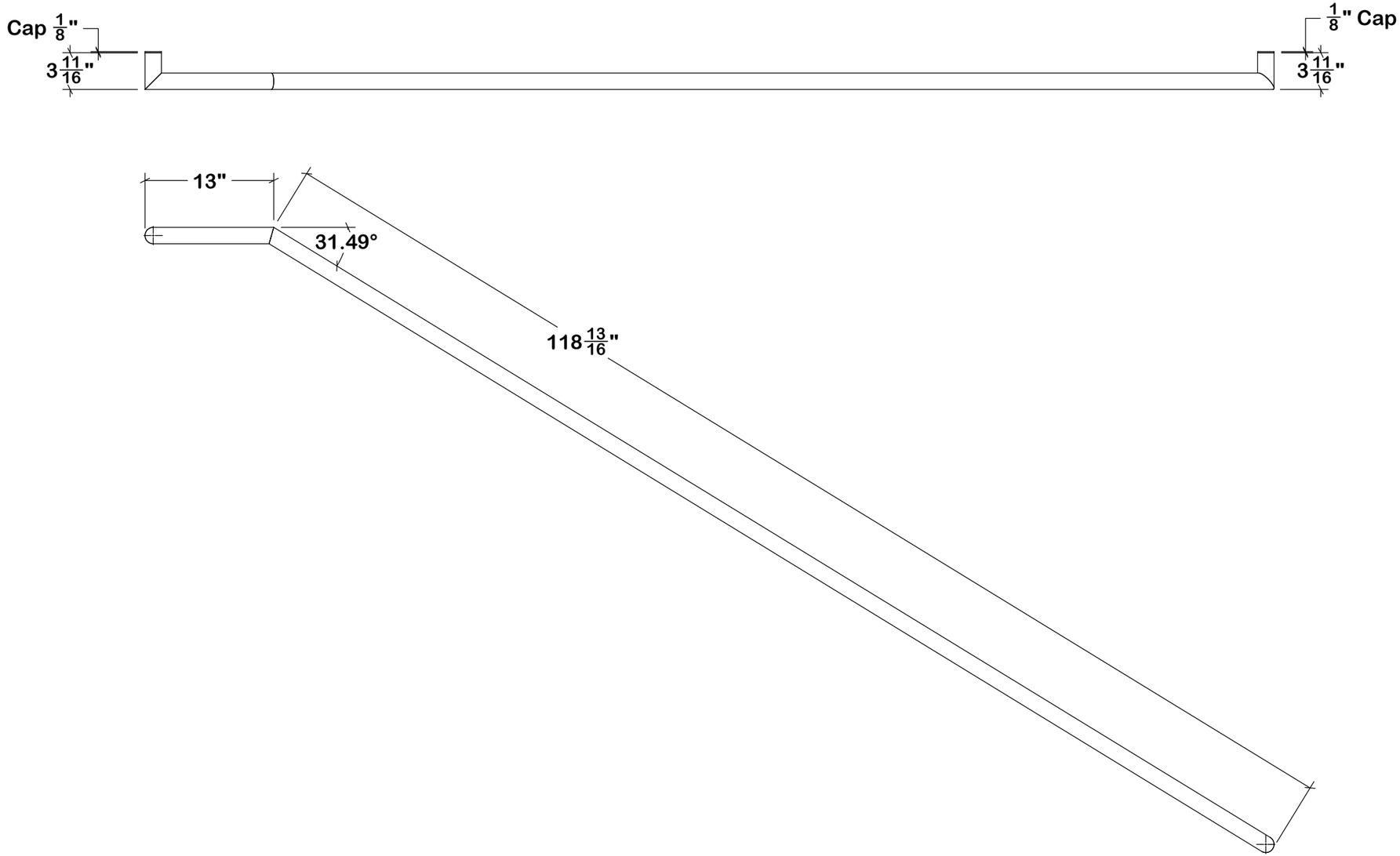

Wall Grab 8 - Label "299-WG8" - Qty (2)

Index	Date	Description	By

Mile High Metal Works, Inc.
7399 Miller Court, Unit A, Frederick, CO 80504
Office 303-485-8283 Fax 303-485-8206

Project Name:	Description:	Date:	Color:	By:	Drawing:
Wood Partners - Alta Flatirons	Pre-cast Stair Core 2 Fab	1/19/2026	Red Oxide Primed	CBA	F29
		Job #: 480-299		Rev: 0	

T:\480 Alta Flatirons\Solidworks\Stairs\Stair Core 2\Fab\Stair Core 2 Pre-Cast Guardrail Fab

THE INFORMATION CONTAINED IN THIS DRAWING IS THE SOLE PROPERTY OF Mile High Metal Works Inc. ANY REPRODUCTION IN PART OR AS A WHOLE WITHOUT THE WRITTEN PERMISSION OF Mile High Metal Works Inc. IS PROHIBITED.

Material:
1 1/4" SCH 10 Pipe
1/8" Caps

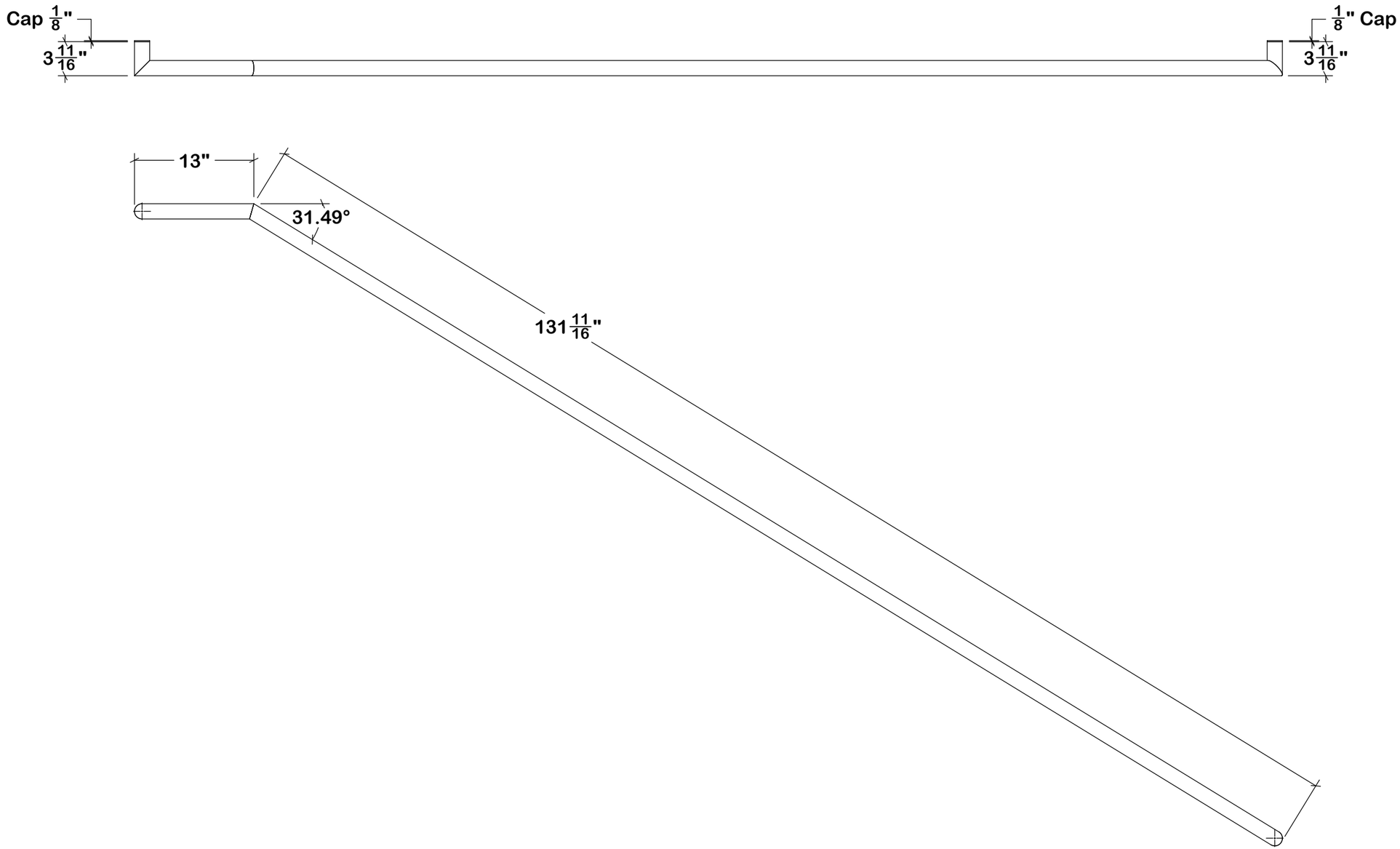

Wall Grab 9 - Label "299-WG9" - Qty (2)

Index	Date	Description	By

Mile High Metal Works, Inc.
7399 Miller Court, Unit A, Frederick, CO 80504
Office 303-485-8283 Fax 303-485-8206

Project Name:	Description:	Date:	Color:	By:	Drawing:
Wood Partners - Alta Flatirons	Pre-cast Stair Core 2 Fab	1/19/2026	Red Oxide Primed	CBA	F30
		Job #: 480-299		Rev: 0	

T:\480 Alta Flatirons\Solidworks\Stairs\Stair Core 2\Fab\Stair Core 2 Pre-Cast Guardrail Fab

THE INFORMATION CONTAINED IN THIS DRAWING IS THE SOLE PROPERTY OF Mile High Metal Works Inc. ANY REPRODUCTION IN PART OR AS A WHOLE WITHOUT THE WRITTEN PERMISSION OF Mile High Metal Works Inc. IS PROHIBITED.

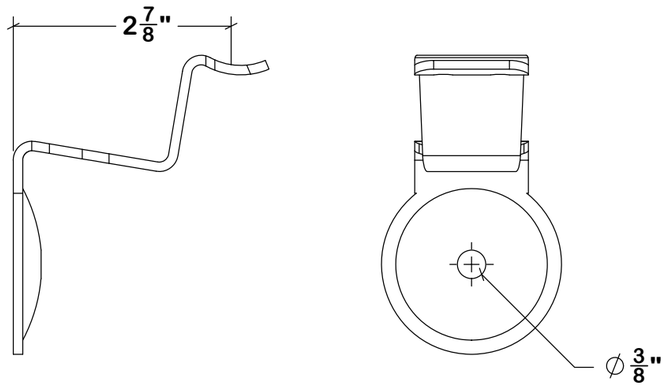

Typ. Wall Grab Bracket - Qty (35)

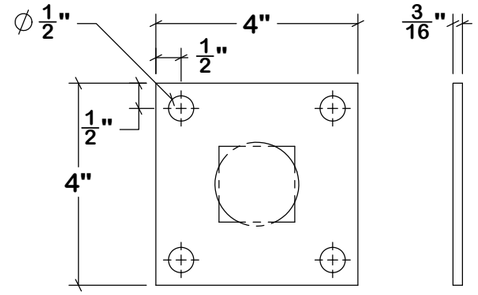

FP44.5 - Qty (22)

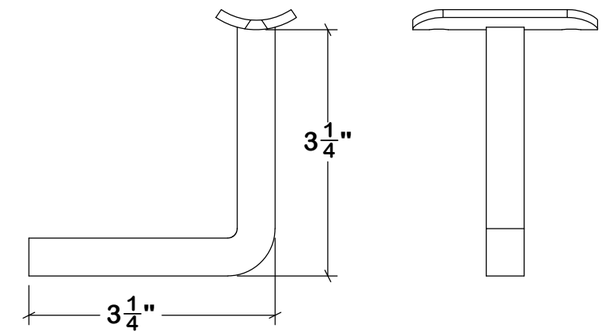

Typ. Guardrail Bracket - Qty (32)

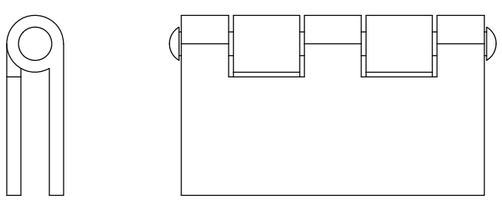

4" HD Hinge - Qty (2)

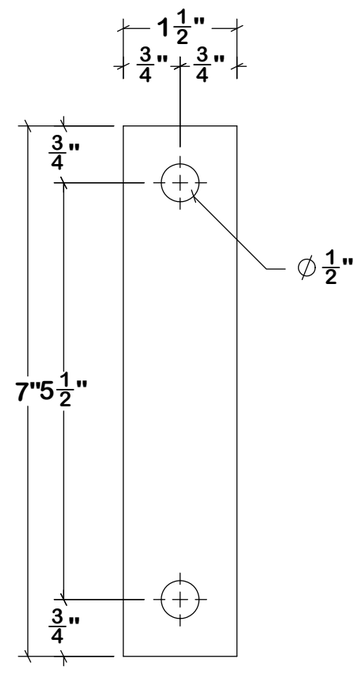

Barrier Gate Wall Plate - 1/4" PL - Qty (2)

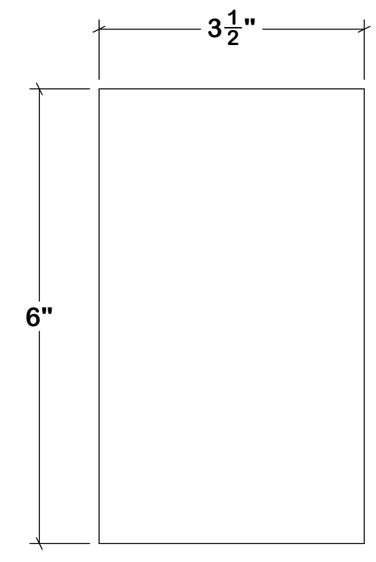

Barrier Gate Wall Plate - 1/4" PL - Qty (2)

T:\480 Alta Flatirons\Solidworks\Stairs\Stair Core 2\Fab\Stair Core 2 Pre-Cast Guardrail Fab

Index	Date	Description	By

Mile High Metal Works, Inc.
7399 Miller Court, Unit A, Frederick, CO 80504
Office 303-485-8283 Fax 303-485-8206

Project Name:	Description:	Date:	Color:	By:	Drawing:
Wood Partners - Alta Flatirons	Pre-cast Stair Core 2 Fab	1/19/2026	Red Oxide Primed	CBA	F31
		Job #: 480-299		Rev: 0	

THE INFORMATION CONTAINED IN THIS DRAWING IS THE SOLE PROPERTY OF Mile High Metal Works Inc. ANY REPRODUCTION IN PART OR AS A WHOLE WITHOUT THE WRITTEN PERMISSION OF Mile High Metal Works Inc. IS PROHIBITED.

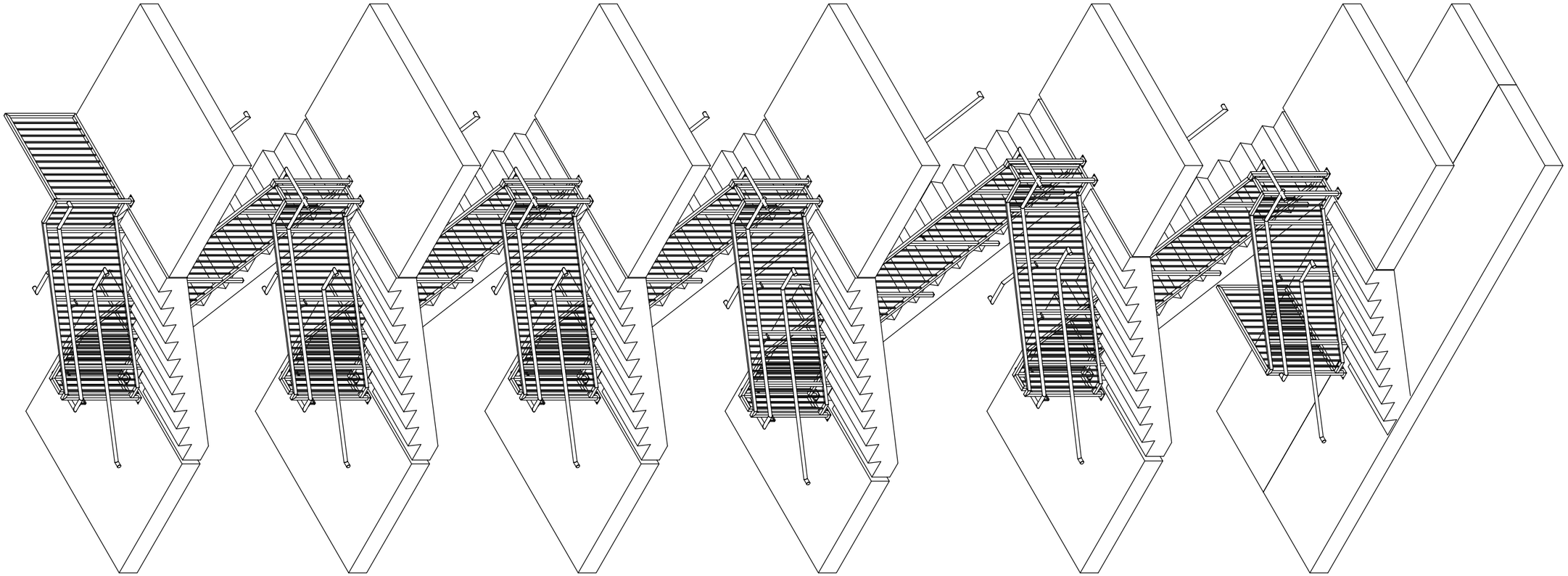

Wood Partners - Alta Flatirons
Stair Core 2 Pre-Cast Stair Rails

Index	Date	Description	By

Mile High Metal Works, Inc.
7399 Miller Court, Unit A, Frederick, CO 80504
Office 303-485-8283 Fax 303-485-8206

Project Name:	Description:	Date:	Color:	By:	Drawing:
Wood Partners - Alta Flatirons	Pre-Cast Stair Core 2 Install	1/19/2026	Red Oxide Primed	CBA	E1
		Job #: 480-299		Rev: 0	

T:\480 Alta Flatirons\Solidworks\Stairs\Stair Core 2\Fab\Stair Core 2 Pre-Cast Guardrail Install

THE INFORMATION CONTAINED IN THIS DRAWING IS THE SOLE PROPERTY OF Mile High Metal Works Inc. ANY REPRODUCTION IN PART OR AS A WHOLE WITHOUT THE WRITTEN PERMISSION OF Mile High Metal Works Inc. IS PROHIBITED.

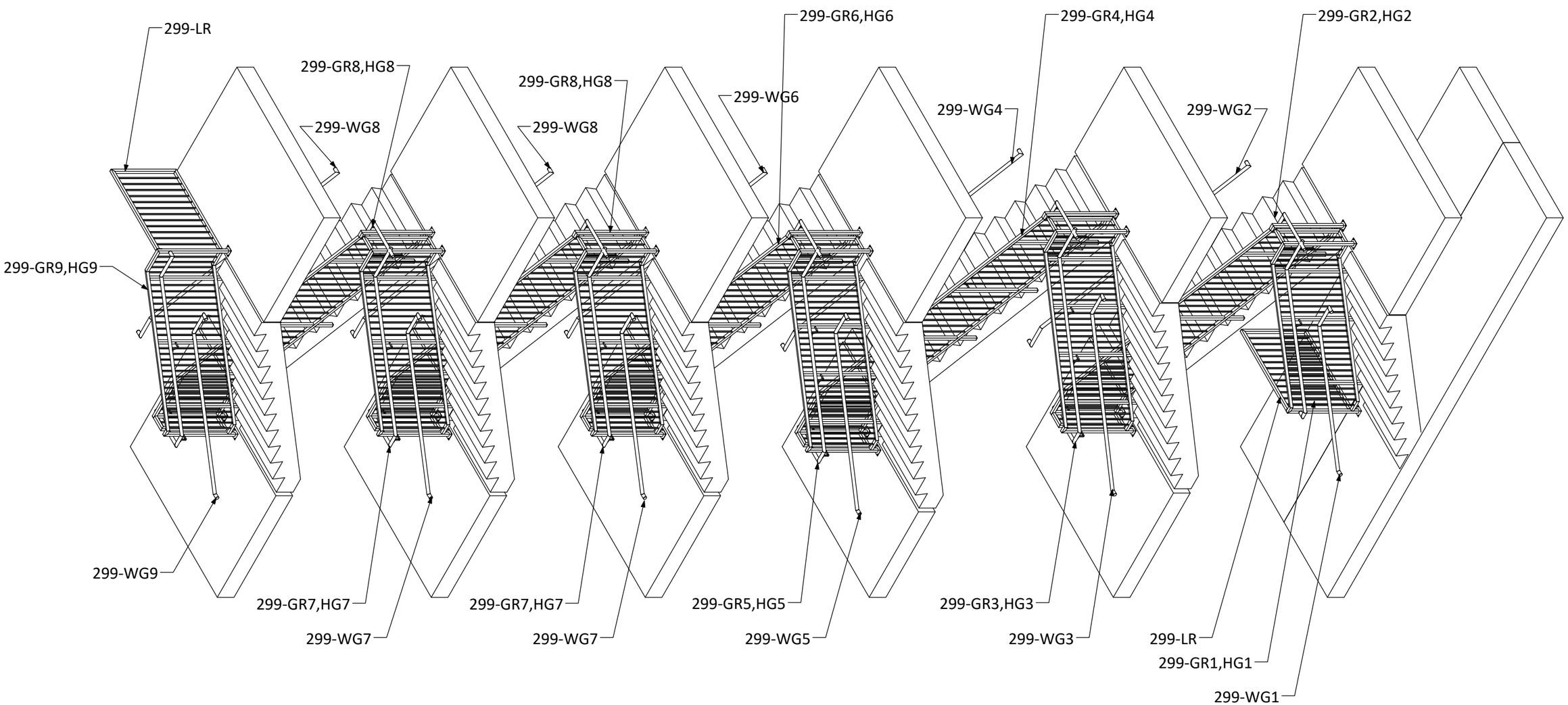

T:\480 Alta Flatirons\Solidworks\Stairs\Stair Core 2\Fab\Stair Core 2 Pre-Cast Guardrail Install

Index	Date	Description	By

Mile High Metal Works, Inc.
7399 Miller Court, Unit A, Frederick, CO 80504
Office 303-485-8283 Fax 303-485-8206

Project Name: Wood Partners - Alta Flatirons

Description: Pre-Cast Stair Core 2 Install

Date: 1/19/2026

Job #: 480-299

Color: Red Oxide Primed

By: CBA

Rev: 0

Drawing: E2

THE INFORMATION CONTAINED IN THIS DRAWING IS THE SOLE PROPERTY OF Mile High Metal Works Inc. ANY REPRODUCTION IN PART OR AS A WHOLE WITHOUT THE WRITTEN PERMISSION OF Mile High Metal Works Inc. IS PROHIBITED.

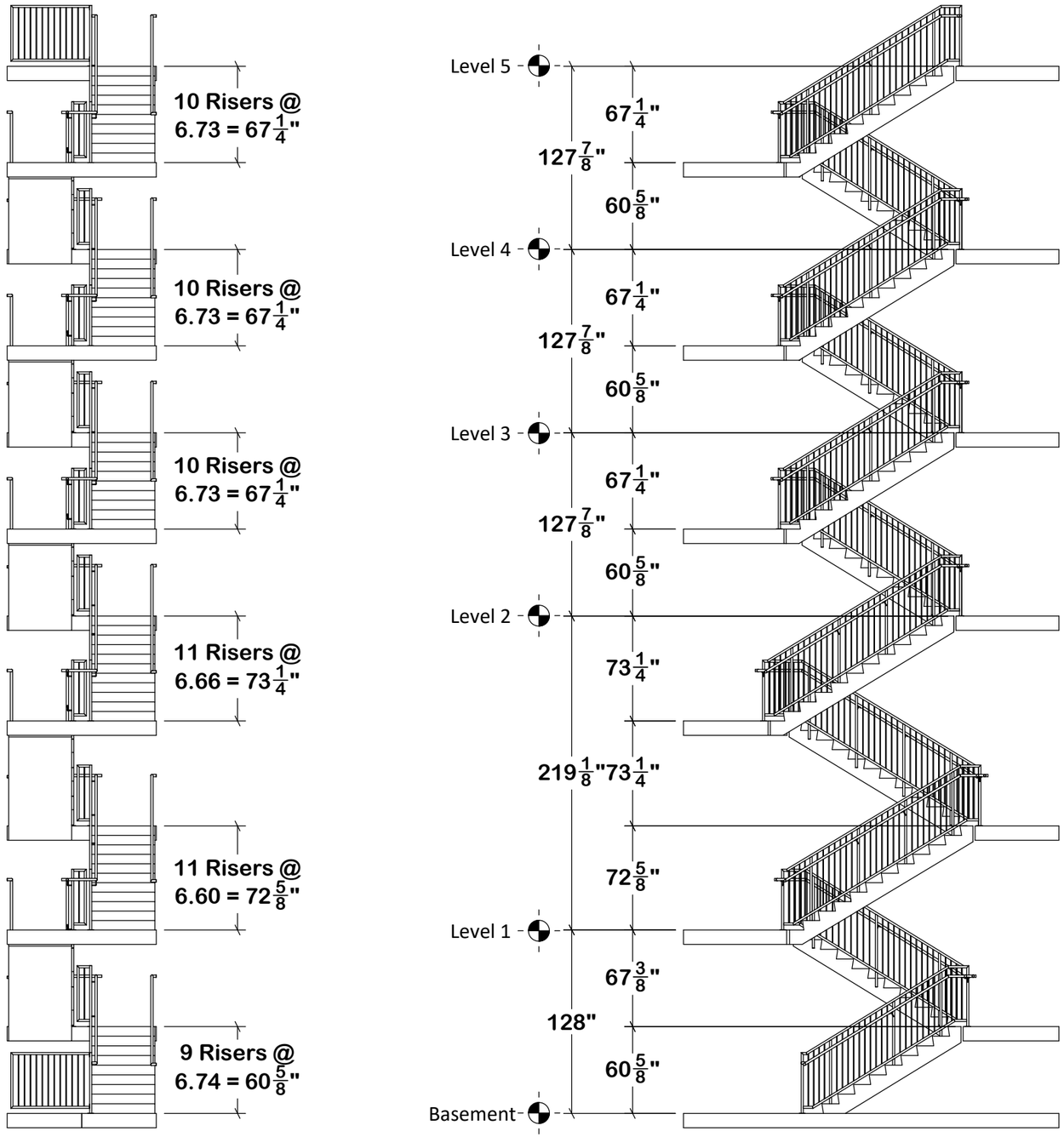

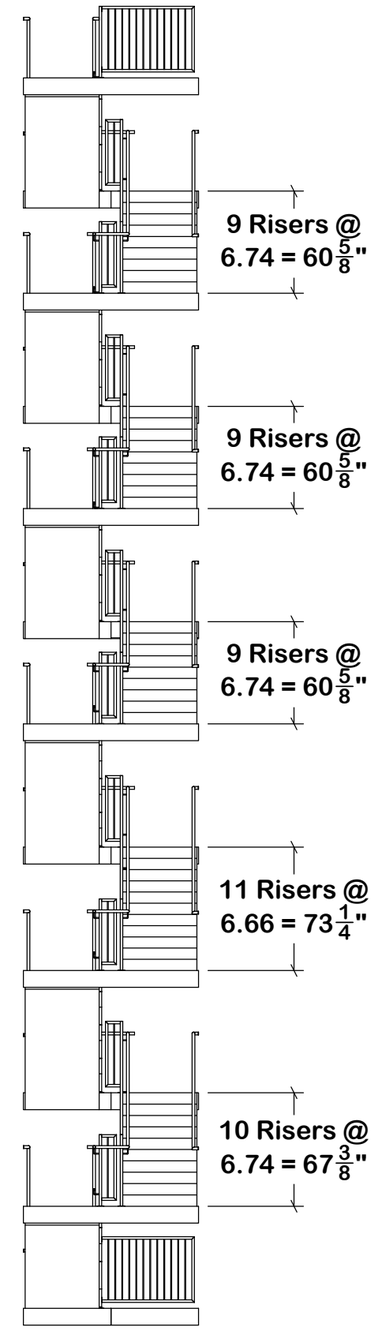

Elevations

Index	Date	Description	By

Mile High Metal Works, Inc.
7399 Miller Court, Unit A, Frederick, CO 80504
Office 303-485-8283 Fax 303-485-8206

Project Name:	Description:	Date:	Color:	By:	Drawing:
Wood Partners - Alta Flatirons	Pre-Cast Stair Core 2 Install	1/19/2026	Red Oxide Primed	CBA	E3
		Job #: 480-299		Rev: 0	

T:\480 Alta Flatirons\Solidworks\Stairs\Stair Core 2\Fab\Stair Core 2 Pre-Cast Guardrail Install

THE INFORMATION CONTAINED IN THIS DRAWING IS THE SOLE PROPERTY OF Mile High Metal Works Inc. ANY REPRODUCTION IN PART OR AS A WHOLE WITHOUT THE WRITTEN PERMISSION OF Mile High Metal Works Inc. IS PROHIBITED.

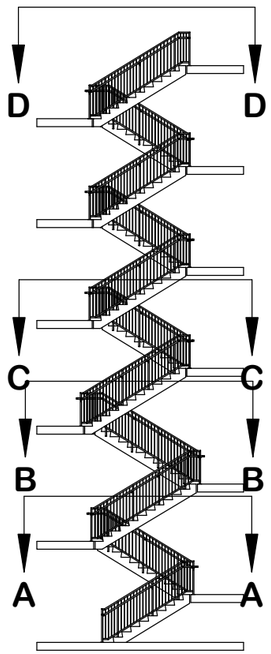

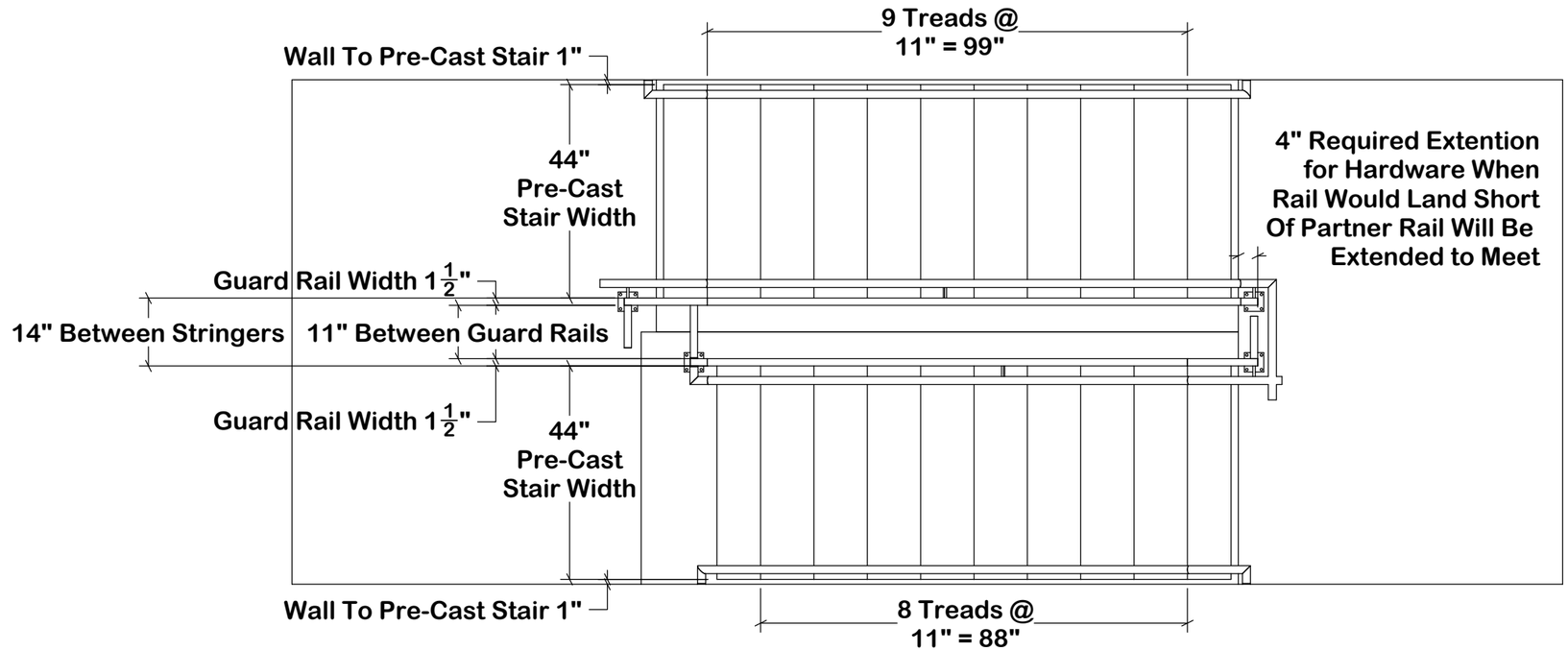

SECTION A

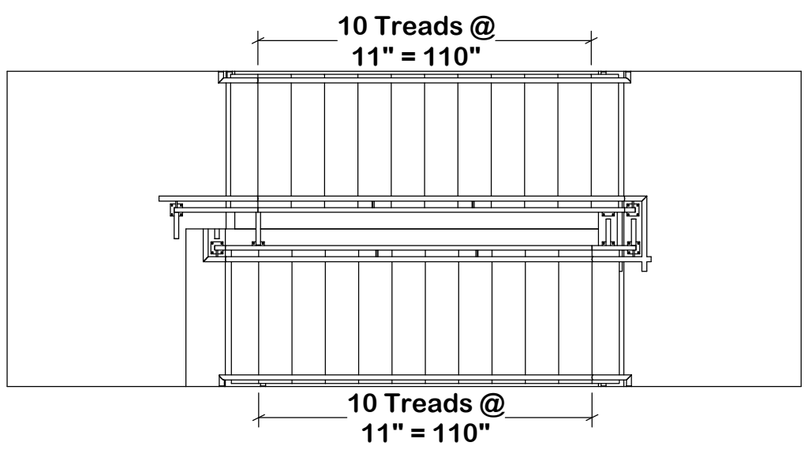

SECTION B

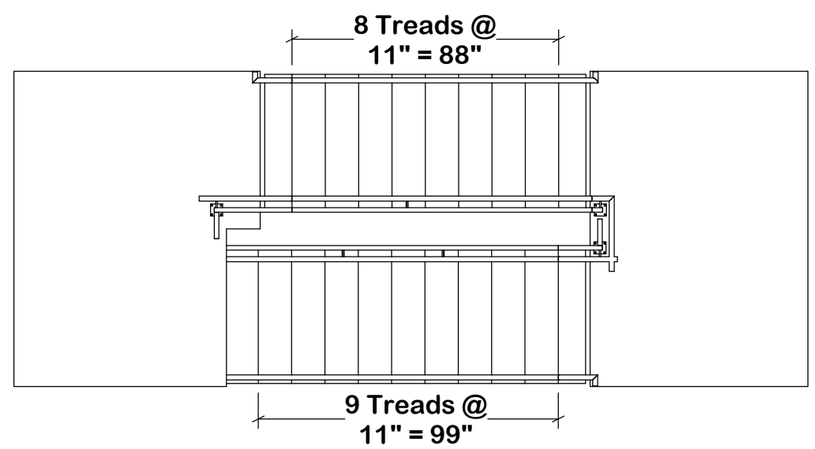

SECTION C

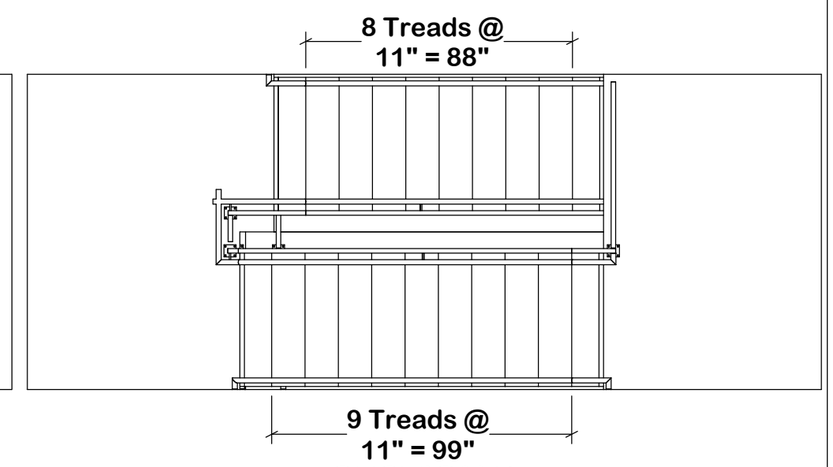

SECTION D

T:\480 Alta Flatirons\Solidworks\Stairs\Stair Core 2\Fab\Stair Core 2 Pre-Cast Guardrail Install

Index	Date	Description	By

Mile High Metal Works, Inc.
7399 Miller Court, Unit A, Frederick, CO 80504
Office 303-485-8283 Fax 303-485-8206

Project Name:	Description:	Date:	Color:	By:	Drawing:
Wood Partners - Alta Flatirons	Pre-Cast Stair Core 2 Install	1/19/2026	Red Oxide Primed	CBA	E4
		Job #: 480-299		Rev: 0	

THE INFORMATION CONTAINED IN THIS DRAWING IS THE SOLE PROPERTY OF Mile High Metal Works Inc. ANY REPRODUCTION IN PART OR AS A WHOLE WITHOUT THE WRITTEN PERMISSION OF Mile High Metal Works Inc. IS PROHIBITED.

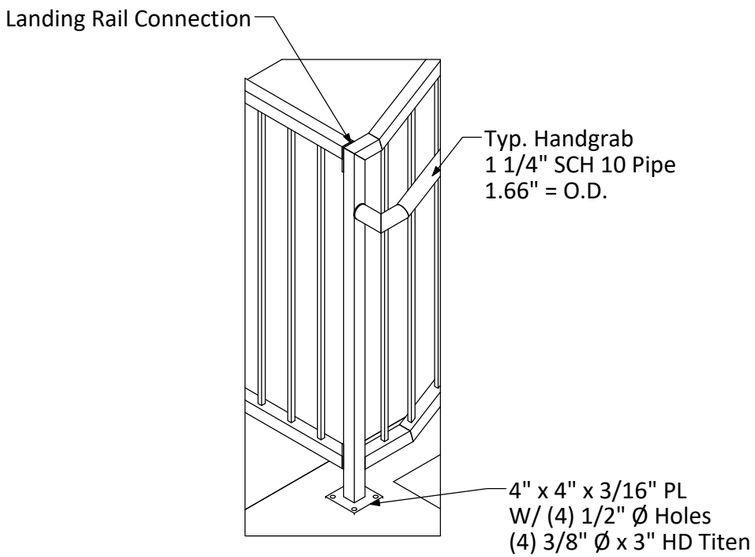

Basement Guard Rail Bottom Connection

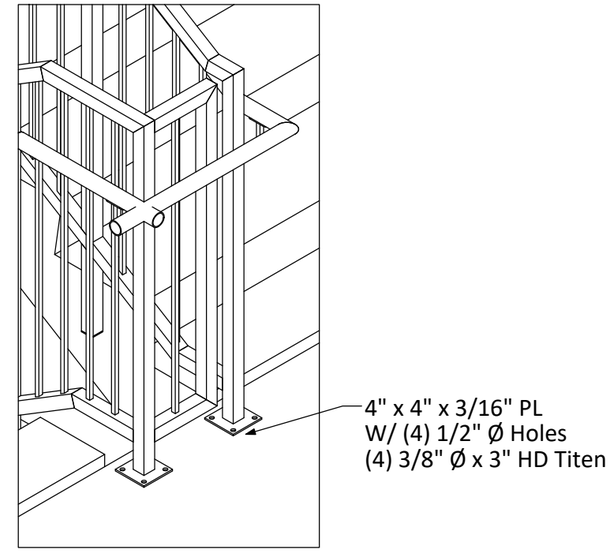

Typ. Mid Landing Connection

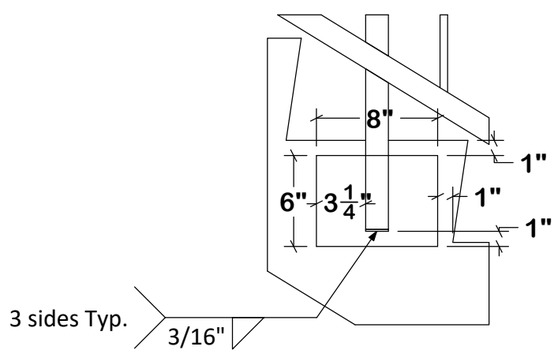

Post to Pre-Cast Embed Connection

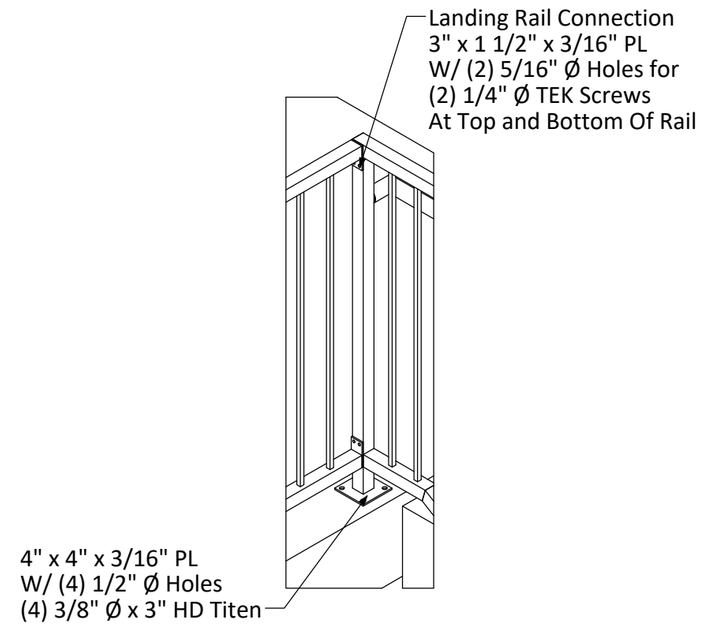

Top Landing Rail and Guar Rail Connection

T:\480 Alta Flatirons\Solidworks\Stairs\Stair Core 2\Fab\Stair Core 2 Pre-Cast Guardrail Install

Index	Date	Description	By

Mile High Metal Works, Inc.
7399 Miller Court, Unit A, Frederick, CO 80504
Office 303-485-8283 Fax 303-485-8206

Project Name:	Description:	Date:	Color:	By:	Drawing:
Wood Partners - Alta Flatirons	Pre-Cast Stair Core 2 Install	1/19/2026	Red Oxide Primed	CBA	E5
		Job #: 480-299		Rev: 0	

THE INFORMATION CONTAINED IN THIS DRAWING IS THE SOLE PROPERTY OF Mile High Metal Works Inc. ANY REPRODUCTION IN PART OR AS A WHOLE WITHOUT THE WRITTEN PERMISSION OF Mile High Metal Works Inc. IS PROHIBITED.

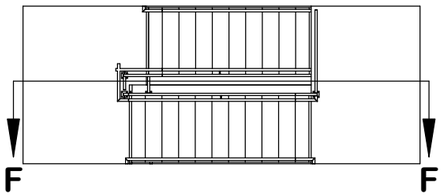

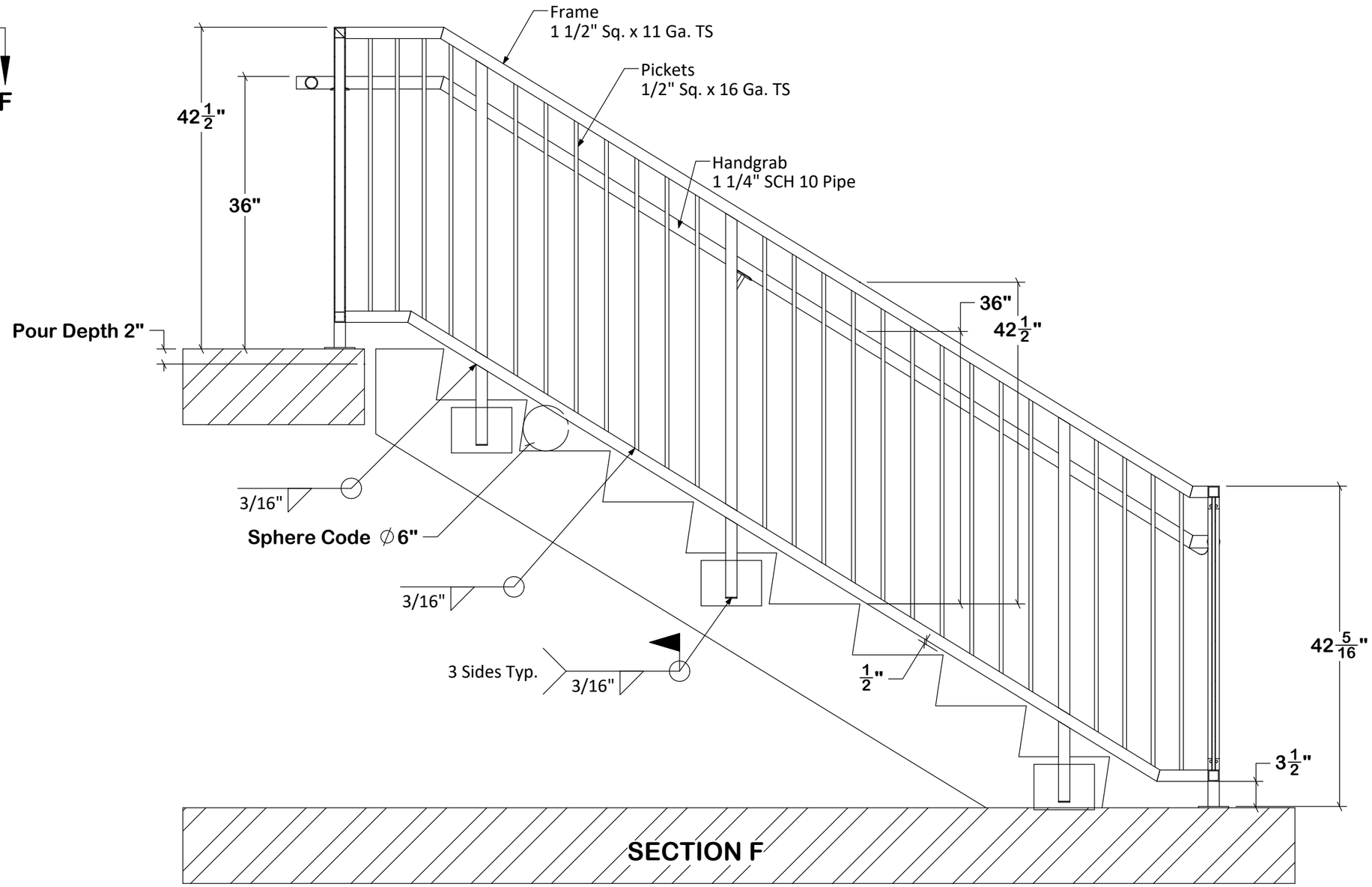

T:\480 Alta Flatirons\Solidworks\Stairs\Stair Core 2\Fab\Stair Core 2 Pre-Cast Guardrail Install

Index	Date	Description	By

Mile High Metal Works, Inc.
7399 Miller Court, Unit A, Frederick, CO 80504
Office 303-485-8283 Fax 303-485-8206

Project Name:	Description:	Date:	Color:	By:	Drawing:
Wood Partners - Alta Flatirons	Pre-Cast Stair Core 2 Install	1/19/2026	Red Oxide Primed	CBA	E6
		Job #: 480-299		Rev: 0	

THE INFORMATION CONTAINED IN THIS DRAWING IS THE SOLE PROPERTY OF Mile High Metal Works Inc. ANY REPRODUCTION IN PART OR AS A WHOLE WITHOUT THE WRITTEN PERMISSION OF Mile High Metal Works Inc. IS PROHIBITED.

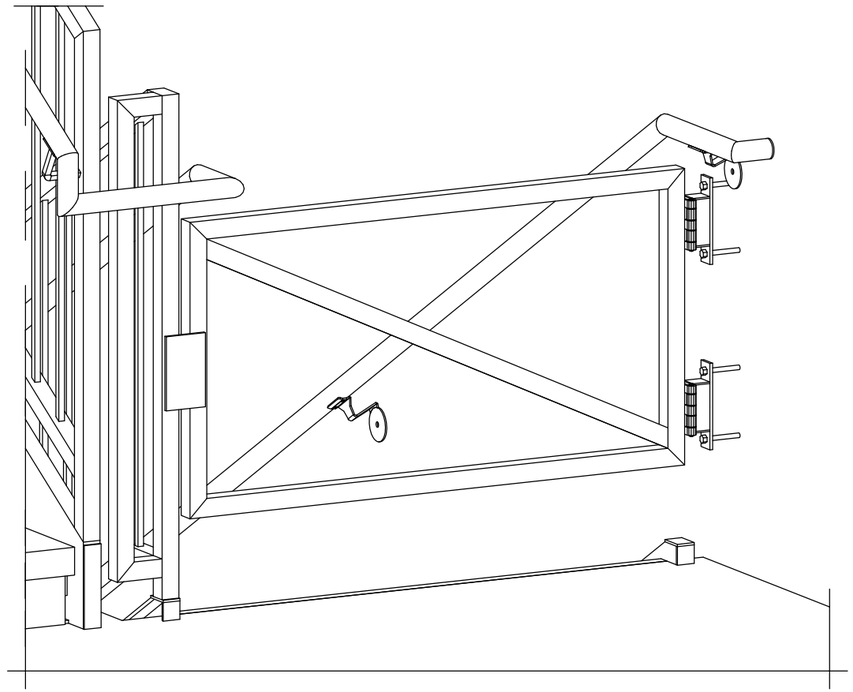

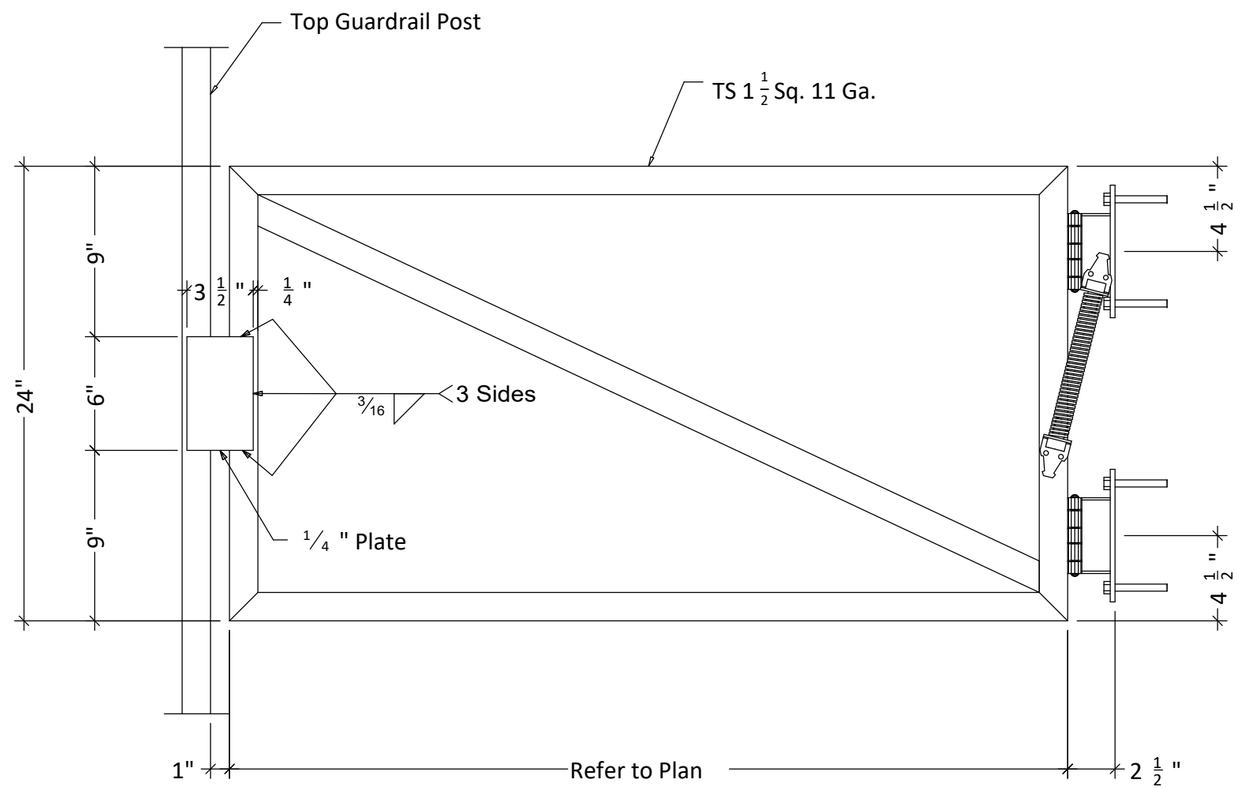

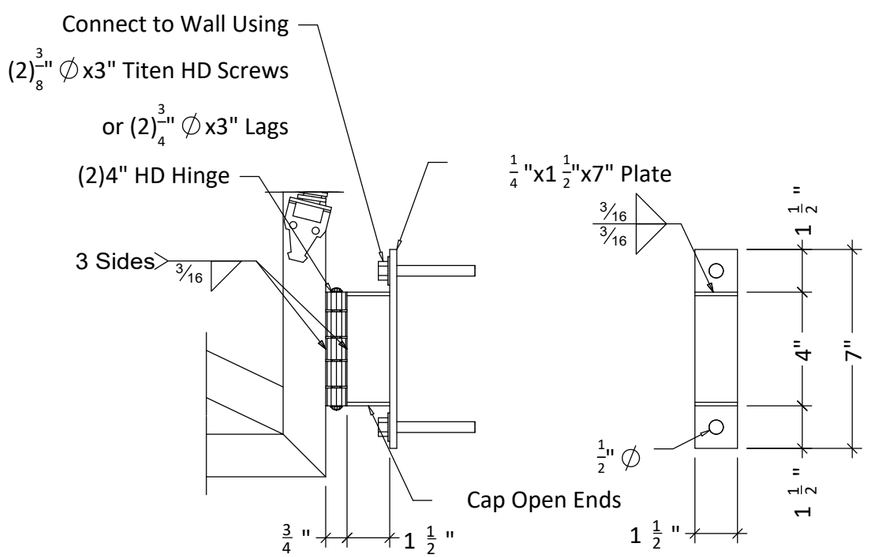

Berrier Gate

Index	Date	Description	By

Mile High Metal Works, Inc.
7399 Miller Court, Unit A, Frederick, CO 80504
Office 303-485-8283 Fax 303-485-8206

Project Name:	Description:	Date:	Color:	By:	Drawing:
Wood Partners - Alta Flatirons	Pre-Cast Stair Core 2 Install	1/19/2026	Red Oxide Primed	CBA	F7
		Job #: 480-299		Rev: 0	

THE INFORMATION CONTAINED IN THIS DRAWING IS THE SOLE PROPERTY OF Mile High Metal Works Inc. ANY REPRODUCTION IN PART OR AS A WHOLE WITHOUT THE WRITTEN PERMISSION OF Mile High Metal Works Inc. IS PROHIBITED.

T:\480 Alta Flatirons\Solidworks\Stairs\Stair Core 2\Fab\Stair Core 2 Pre-Cast Guardrail Install

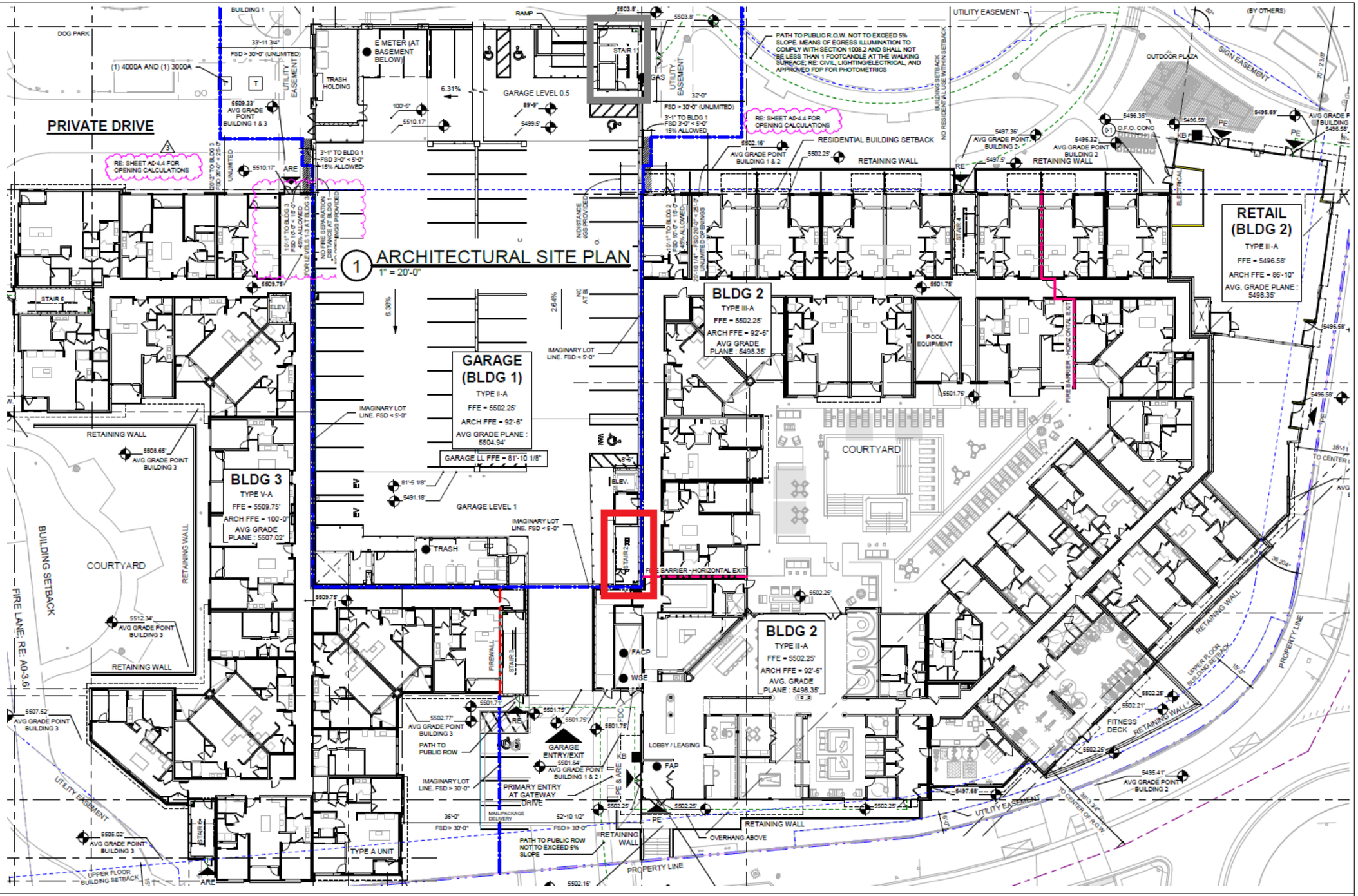

Index	Date	Description	By

Mile High Metal Works, Inc.
7399 Miller Court, Unit A, Frederick, CO 80504
Office 303-485-8283 Fax 303-485-8206

Project Name: Wood Partners - Alta Flatirons

Description: Pre-Cast Stair Core 2 Install

Date: 1/19/2026

Job #: 480-299

Color: Red Oxide Primed

By: CBA

Rev: 0

Drawing: E8

T:\480 Alta Flatirons\Solidworks\Stairs\Stair Core 2\Fab\Stair Core 2 Pre-Cast Guardrail Install

THE INFORMATION CONTAINED IN THIS DRAWING IS THE SOLE PROPERTY OF Mile High Metal Works Inc. ANY REPRODUCTION IN PART OR AS A WHOLE WITHOUT THE WRITTEN PERMISSION OF Mile High Metal Works Inc. IS PROHIBITED.