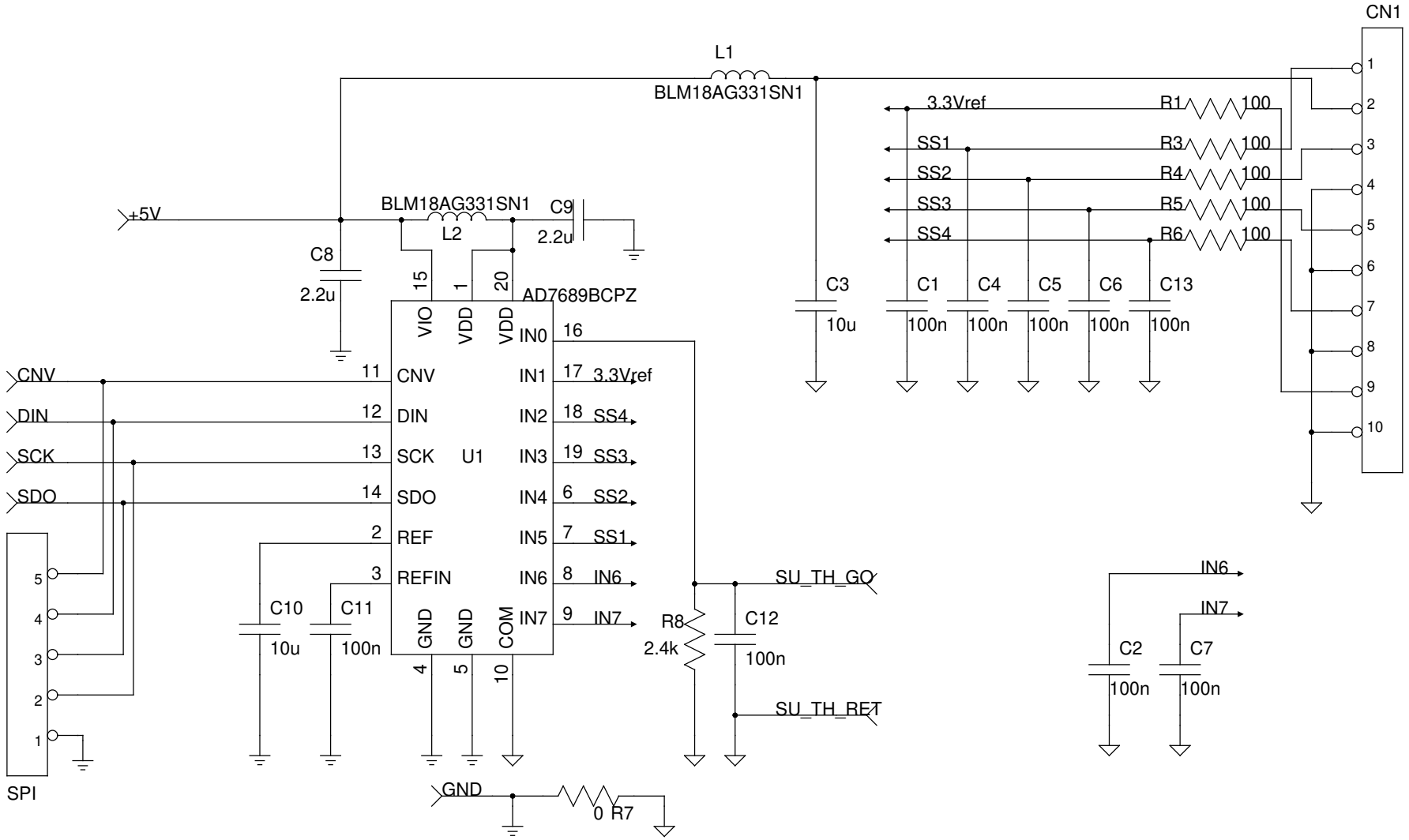


| | |
|---|---|
| TITLE | Analog Sensors (ADC) |
| FILE: | REVISION: 0.1 |
| PAGE 4 OF 6 | DRAWN BY: |