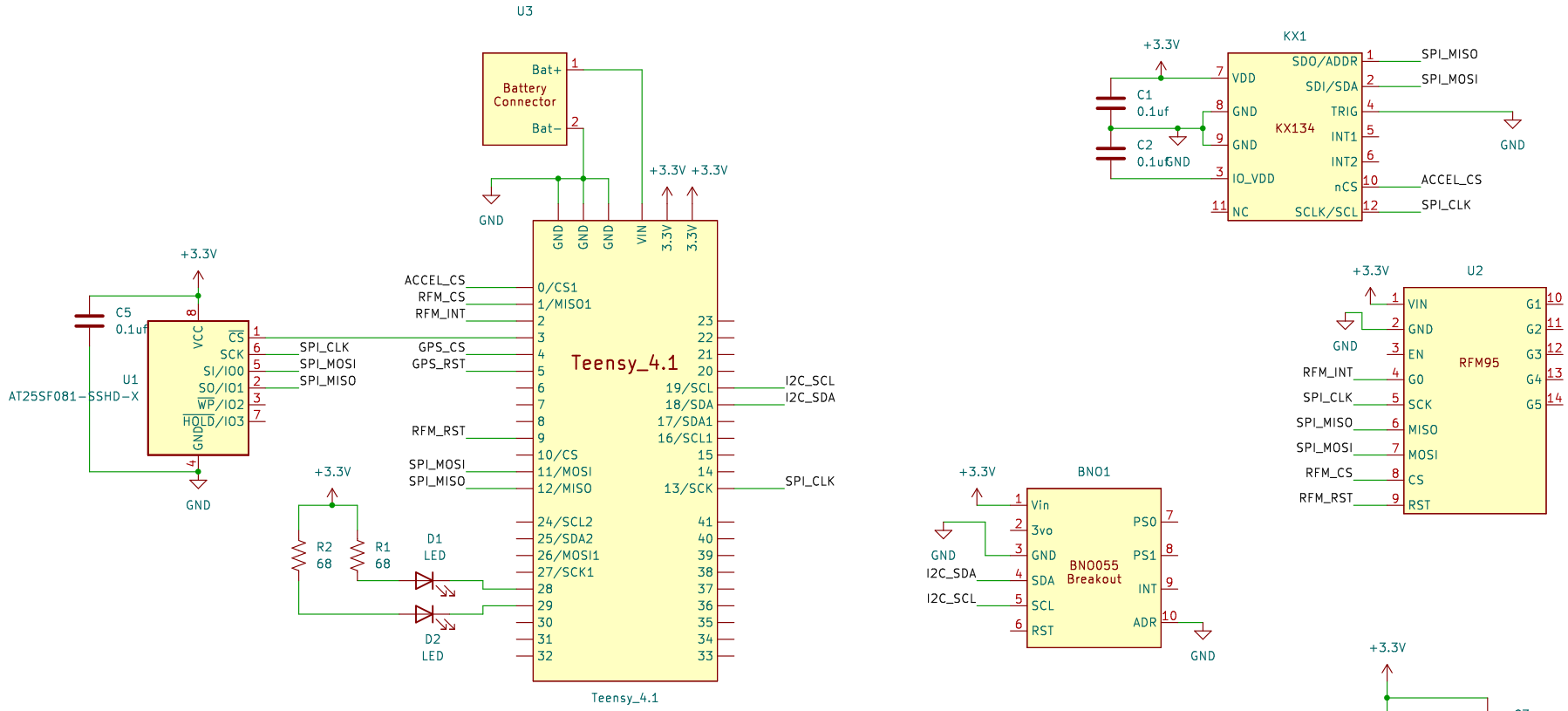

Cornell College Engineering Club

Sheet: /

File: flight_board.kicad_sch

Title: Rocket Flight Board

Size: A	Date: 2024-04-15	**Rev: 1**
KiCad E.D.A. kicad 7.0.10		Id: 1/1