RGBCIR Color Sensor With I²C Interface

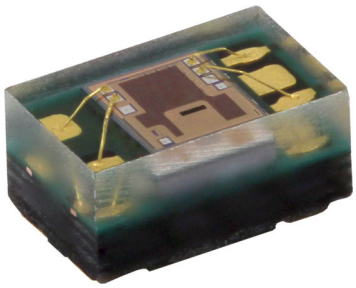

ADDITIONAL RESOURCES

Design Tools | Related Documents | 3D Models | Application Notes

DESCRIPTION

VEML3328 sensor senses red, green, blue, clear, and IR light by incorporating photodiodes, amplifiers, and analog / digital circuits into a single CMOS chip. With this sensor, the brightness and color temperature of a display backlight can be adjusted based on the ambient light source, and it can differentiate indoor from outdoor lighting environments.

FEATURES

- Package type: surface-mount
- Dimensions (L x W x H in mm): 2.0 x 1.25 x 1.0
- Integrated modules: color sensor and signal conditioning IC
- Supports low transmittance (dark) lens design
- Provides 16-bit resolution for each channel (R, G, B, C, and IR)
- Package: OPLGA4
- Temperature compensation: -40 °C to +85 °C
- Low power consumption I²C (SMBus compatible) interface
- Floor life: 168 h, MSL 3, according to J-STD-020
- Output type: I²C bus
- Operation voltage: 2.6 V to 3.6 V
- Material categorization: for definitions of compliance please see www.vishay.com/doc?99912

Pb-free
e4
RoHS COMPLIANT
HALOGEN FREE
GREEN (5-2008)

APPLICATIONS

- Automatic white balancing and color cast correction in digital cameras
- Automatic LCD backlight adjustment
- Maintaining consistent true color and ideal brightness levels on handheld displays as users move between indoor and outdoor environments
- On / off light switching in industrial and consumer applications
- Active monitoring of LED color output for IoT and smart lighting

PRODUCT SUMMARY

PART NUMBER	OPERATING VOLTAGE RANGE (V)	I²C BUS VOLTAGE RANGE (V)	PEAK SENSITIVITY (nm)	OUTPUT CODE
VEML3328	2.6 to 3.6	1.7 to 3.6	590, 610, 560, 470, 825 (C, R, G, B, IR)	16 bit, I²C

For technical questions, contact: consumersensors@vishay.com
THIS DOCUMENT IS SUBJECT TO CHANGE WITHOUT NOTICE. THE PRODUCTS DESCRIBED HEREIN AND THIS DOCUMENT ARE SUBJECT TO SPECIFIC DISCLAIMERS, SET FORTH AT www.vishay.com/doc?91000

ORDERING INFORMATION			
ORDERING CODE	PACKAGING	VOLUME [1]	REMARKS
VEML3328	Tape and reel	MOQ: 2500 pcs	2.00 mm x 1.25 mm x 1.00 mm

Note

[1] MOQ: minimum order quantity

ABSOLUTE MAXIMUM RATINGS (T_{amb} = 25 °C, unless otherwise specified)					
PARAMETER	TEST CONDITION	SYMBOL	MIN.	MAX.	UNIT
Supply voltage		V_{DD}	0	4	V
Operation temperature range		T_{amb}	-40	+85	°C
Storage temperature range		T_{stg}	-40	+85	°C

RECOMMENDED OPERATING CONDITIONS (T_{amb} = 25 °C, unless otherwise specified)					
PARAMETER	TEST CONDITION	SYMBOL	MIN.	MAX.	UNIT
Supply voltage		V_{DD}	2.6	3.6	V
Operation temperature range		T_{amb}	-40	+85	°C
I^2C bus operating frequency		$f_{(I2CCLK)}$	10	400	kHz

PIN DESCRIPTIONS			
PIN ASSIGNMENT	SYMBOL	TYPE	FUNCTION
1	GND	-	Power supply ground; all voltages are referenced to GND
2	SDA	I / O (open drain)	I^2C digital bus data input / output
3	SCL	I	I^2C digital bus clock input
4	V_{DD}	-	Supply voltage

BLOCK DIAGRAM

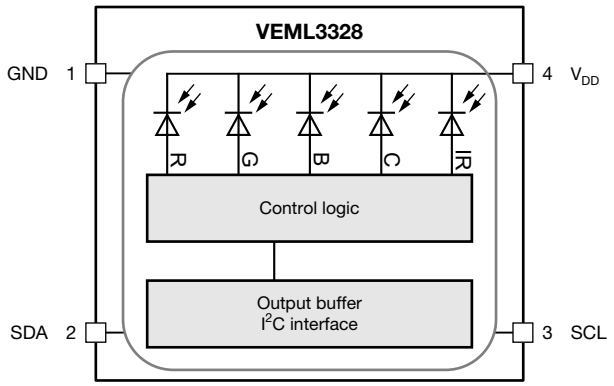

For technical questions, contact: consumersensors@vishay.com
THIS DOCUMENT IS SUBJECT TO CHANGE WITHOUT NOTICE. THE PRODUCTS DESCRIBED HEREIN AND THIS DOCUMENT ARE SUBJECT TO SPECIFIC DISCLAIMERS, SET FORTH AT www.vishay.com/doc?91000

BASIC CHARACTERISTICS (T_{amb} = 25 °C, unless otherwise specified)						
PARAMETER	**TEST CONDITION**	**SYMBOL**	**MIN.**	**TYP.**	**MAX.**	**UNIT**
Supply voltage		V_{DD}	2.6	3.0	3.6	V
Supply current [1]		I_{DD}	500	580	1000	µA
I^2C signal input [1] Logic high		V_{IH}	1.2	-	-	V
I^2C signal input [1] Logic low		V_{IL}	-	-	0.4	V
Peak sensitivity wavelength		λ_{PC}	-	590	-	nm
		λ_{PR}	-	610	-	nm
		λ_{PG}	-	560	-	nm
		λ_{PB}	-	470	-	nm
		λ_{PIR}	-	825	-	nm
Irradiance responsivity	520 nm LED [1][2]	C	-	57	-	counts/(µW/cm^2)
	850 nm LED [1][2]	IR	-	25	-	counts/(µW/cm^2)
	643 nm LED [1][2]	R	-	41	-	counts/(µW/cm^2)
	520 nm LED [1][2]	G	-	39	-	counts/(µW/cm^2)
	460 nm LED [1][2]	B	-	34	-	counts/(µW/cm^2)
Sensitivity	5000 K WLED [1][3]	G	-	0.003	-	lx/count
Dark offset [1][3]		R, G, B, C, IR	0	-	3	counts
Operating temperature range		T_{amb}	-40	-	+85	°C
Shutdown current [1]	Light condition = dark	I_{DD}	0	800	1000	nA

Notes

[1] Test condition: V_{DD} = 3 V, temperature: 25 °C

[2] IT: 100 ms, SENS = (0) = x 1, DG = (0 : 0) = x 1, GAIN = (0 : 0) = x 1

[3] IT: 400 ms, SENS = (0) = x 1, DG = (1 : 0) = x 4, GAIN = (1 : 0) = x 4

For technical questions, contact: consumersensors@vishay.com
THIS DOCUMENT IS SUBJECT TO CHANGE WITHOUT NOTICE. THE PRODUCTS DESCRIBED HEREIN AND THIS DOCUMENT ARE SUBJECT TO SPECIFIC DISCLAIMERS, SET FORTH AT www.vishay.com/doc?91000

I²C BUS TIMING CHARACTERISTICS (T_{amb} = 25 °C, unless otherwise specified)						
PARAMETER	**SYMBOL**	**STANDARD MODE**		**FAST MODE**		**UNIT**
		MIN.	**MAX.**	**MIN.**	**MAX.**	
Clock frequency	$f_{(I2CCLK)}$	10	100	10	400	kHz
Bus free time between start and stop condition	$t_{(BUF)}$	4.7	-	1.3	-	µs
Hold time after (repeated) start condition; after this period, the first clock is generated	$t_{(HDSTA)}$	4.0	-	0.6	-	µs
Repeated start condition setup time	$t_{(SUSTA)}$	4.7	-	0.6	-	µs
Stop condition setup time	$t_{(SUSTO)}$	4.0	-	0.6	-	µs
Data hold time	$t_{(HDDAT)}$	-	3450	-	900	ns
Data setup time	$t_{(SUDAT)}$	250	-	100	-	ns
I²C clock (SCK) low period	$t_{(LOW)}$	4.7	-	1.3	-	µs
I²C clock (SCK) high period	$t_{(HIGH)}$	4.0	-	0.6	-	µs
Clock / data fall time	t_f	-	300	-	300	ns
Clock / data rise time	t_r	-	1000	-	300	ns

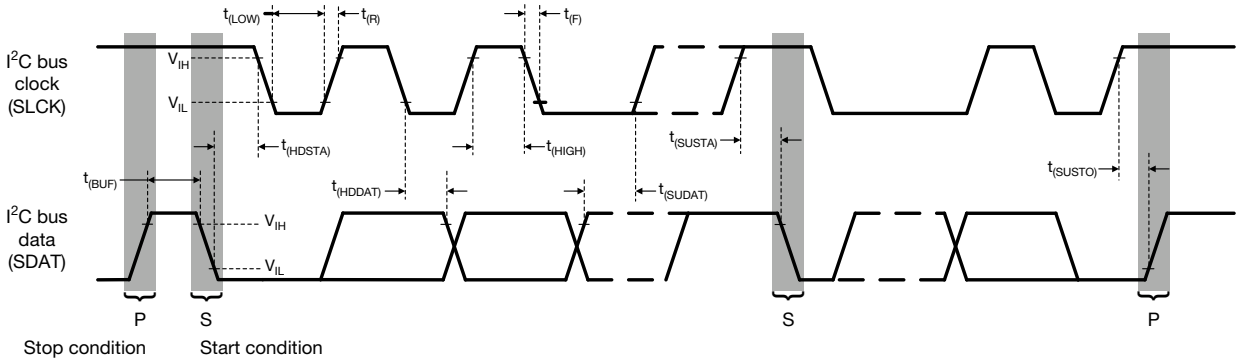

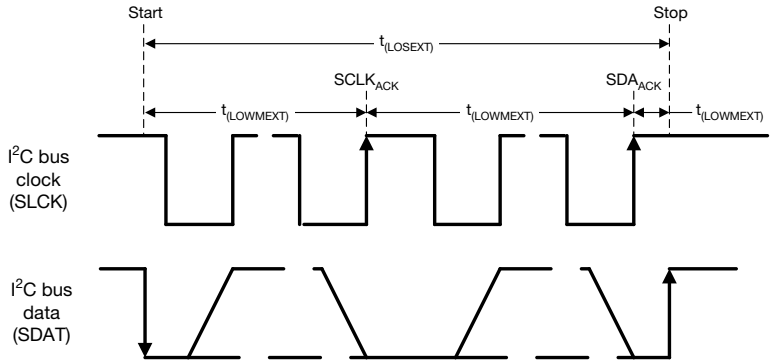

Fig. 1 - I²C Bus Timing Diagram

For technical questions, contact: consumersensors@vishay.com
THIS DOCUMENT IS SUBJECT TO CHANGE WITHOUT NOTICE. THE PRODUCTS DESCRIBED HEREIN AND THIS DOCUMENT ARE SUBJECT TO SPECIFIC DISCLAIMERS, SET FORTH AT www.vishay.com/doc?91000

PARAMETER TIMING INFORMATION

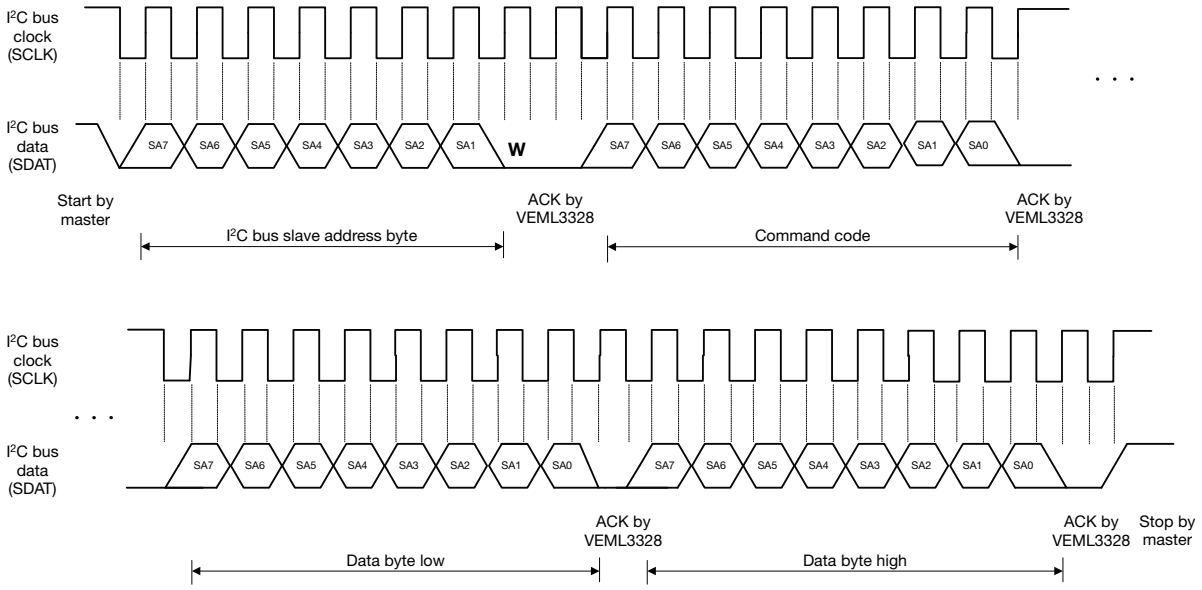

Fig. 2 - I²C Bus Timing for Sending Word Command Format

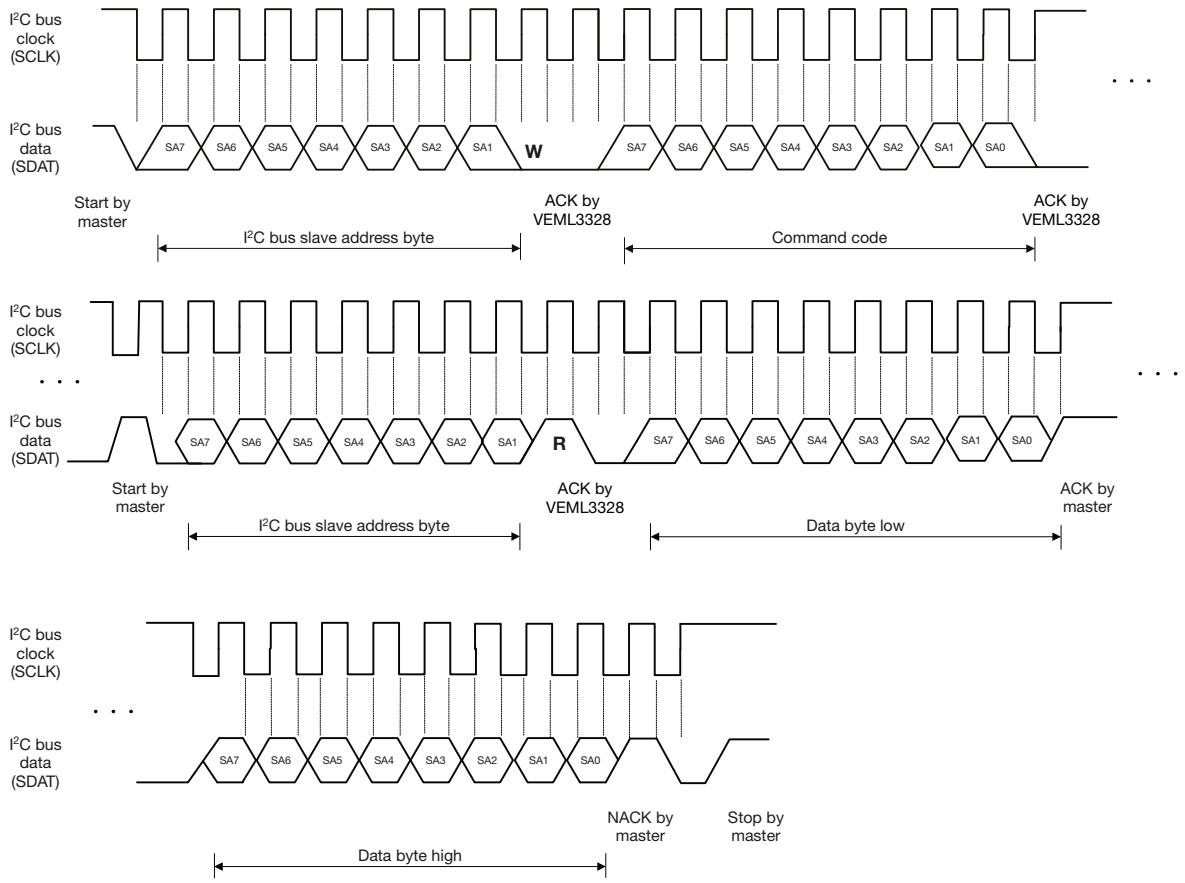

Fig. 3 - I²C Bus Timing for Receiving Word Command Format

For technical questions, contact: consumersensors@vishay.com
THIS DOCUMENT IS SUBJECT TO CHANGE WITHOUT NOTICE. THE PRODUCTS DESCRIBED HEREIN AND THIS DOCUMENT ARE SUBJECT TO SPECIFIC DISCLAIMERS, SET FORTH AT www.vishay.com/doc?91000

TYPICAL PERFORMANCE CHARACTERISTICS (T_{amb} = 25 °C, unless otherwise specified)

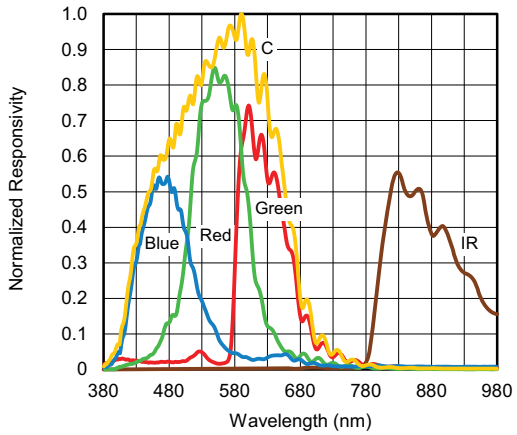

Fig. 4 - Normalized Responsivity vs. Wavelength

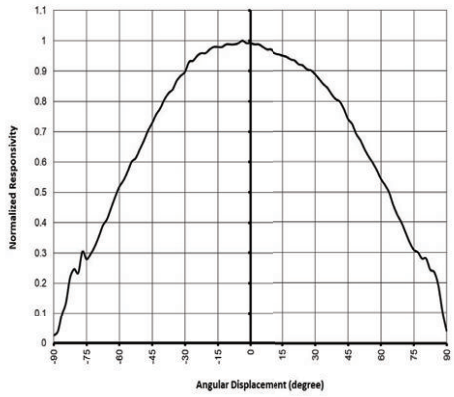

Fig. 5 - Normalized Responsivity vs. Angular Displacement

APPLICATION INFORMATION

Pin Connection With the Host

The VEML3328 is a cost effective solution color and IR sensor with an I²C interface. All possible settings and result data can be accessed via the standard I²C interface.

A typical application circuit is shown in Fig. 6 below. The additional 0.1 µF capacitor near the V_{DD} pin in the circuit is used for power supply noise rejection. Pull-up resistors for the I²C bus design are recommended to be 2.2 kΩ.

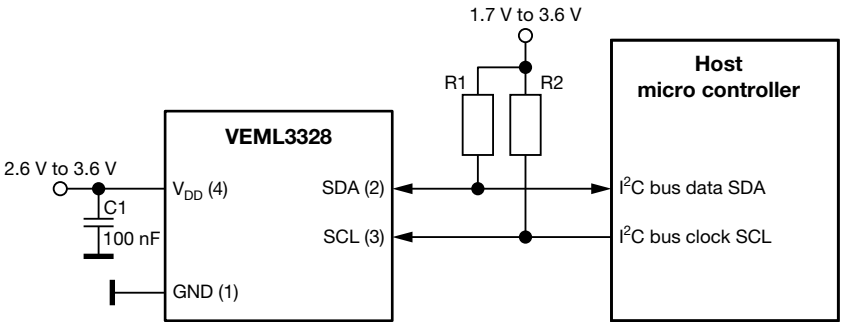

Fig. 6 - Hardware Pin Connection Diagram (Slave Address 0x10)

Digital Interface

The VEML3328 contains a command register accessible via the I²C bus. All settings can be controlled via this register. The VEML3328's I²C command format description for read and write operations between VEML3328 and the host is shown in Fig. 7. The white areas indicate the host activity and the gray areas indicate VEML3328's acknowledgement of the host access activity. Note that this protocol must be followed exactly to avoid false communication on the bus. Special care should be taken for the "Read Word" format, as here a repeated start condition is a must, as indicated.

Fig. 7 - Command Protocol Format

For technical questions, contact: consumersensors@vishay.com
THIS DOCUMENT IS SUBJECT TO CHANGE WITHOUT NOTICE. THE PRODUCTS DESCRIBED HEREIN AND THIS DOCUMENT ARE SUBJECT TO SPECIFIC DISCLAIMERS, SET FORTH AT www.vishay.com/doc?91000

Command Register Format

VEML3328 uses 0x10 slave address for 7-bit I²C addressing protocol. VEML3328 has 16-bit resolution for each channel (R, G, B, C, and IR).

TABLE 1 - COMMAND CODE DESCRIPTION

COMMAND CODE	REGISTER NAME	BIT	FUNCTION DESCRIPTION	R / W
0x00	SD1	15	Shutdown setting [1] SD1 = 0 power on; SD1 = 1 shutdown (default)	R / W
	SD_ALS only	14	0 = power on all channels (default) 1 = power on G, C, and IR (R, B shutdown)	
	DG	13 : 12	(0 : 0) = x 1 (default) (0 : 1) = x 2 (1 : 0) = x 4 (1 : 1) = reserved	
	GAIN	11 : 10	(1 : 1) = x 1/2 (0 : 0) = x 1 (default) (0 : 1) = x 2 (1 : 0) = x 4	
	Reserved	9 : 8	Set (0 : 0)	
	Reserved	7	Set 0	
	SENS	6	0 = high sensitivity (default); 1 = low sensitivity (1/3)	
	IT	5 : 4	Integration time setting (0 : 0) = 50 ms (default) (0 : 1) = 100 ms (1 : 0) = 200 ms (1 : 1) = 400 ms	
	AF	3	Auto / active force mode 0 = auto mode (default); 1 = active force mode	
	TRIG	2	Trigger a single measurement when in active force mode. This bit resets to “0” automatically when the measurement cycle is complete. 0 = no trigger (default); 1 = trigger one measurement cycle	
	Reserved	1	Set 0	
	SD0	0	Shutdown setting [1] SD0 = 0 power on; SD0 = 1 shutdown (default)	

Note

[1] For power on, both SD0 and SD1 have to be set to 0. For shutdown, both SD0 and SD1 have to be set to 1

TABLE 2 - DATA REGISTERS

COMMAND CODE	REGISTER NAME	DATE BYTE LOW / HIGH	BIT	FUNCTION DESCRIPTION	R / W
0x04	C_LSB	Low	7 : 0	Clear channel LSB data	R
	C_MSB	High	7 : 0	Clear channel MSB data	
0x05	R_LSB	Low	7 : 0	Red channel LSB data	
	R_MSB	High	7 : 0	Red channel MSB data	
0x06	G_LSB	Low	7 : 0	Green channel LSB data	
	G_MSB	High	7 : 0	Green channel MSB data	
0x07	B_LSB	Low	7 : 0	Blue channel LSB data	
	B_MSB	High	7 : 0	Blue channel MSB data	
0x08	IR_LSB	Low	7 : 0	Infrared channel LSB data	
	IR_MSB	High	7 : 0	Infrared channel MSB data	
0x0C	ID_L	Low	7 : 0	Device ID 0x28	
	Reserved	High	7 : 0		

Note

- Command codes 0x01 to 0x03 and 0x09 to 0x0B are reserved

For technical questions, contact: consumersensors@vishay.com
THIS DOCUMENT IS SUBJECT TO CHANGE WITHOUT NOTICE. THE PRODUCTS DESCRIBED HEREIN AND THIS DOCUMENT ARE SUBJECT TO SPECIFIC DISCLAIMERS, SET FORTH AT www.vishay.com/doc?91000

Data Access

Each of the C, R, G, B, and IR result registers has a 16-bit resolution (2 bytes). One byte is the LSB and the other byte is the MSB. The host needs to follow the read word protocol as shown in Fig. 7. The data format shows as below.

TABLE 3 - 16-BIT DATA FORMAT

	VEML3328 16-BIT DATA FORMAT															
Data bit	15	14	13	12	11	10	9	8	7	6	5	4	3	2	1	0
Data byte low									◄							►
Data byte high	◄							►								

Note

S	Slave address	Wr	A	Command code	A	S	Slave address	Rd	A	Data byte low	A	Data byte high	N	P

- Data byte low represents LSB and data byte high represents MSB

PACKAGE INFORMATION in millimeters

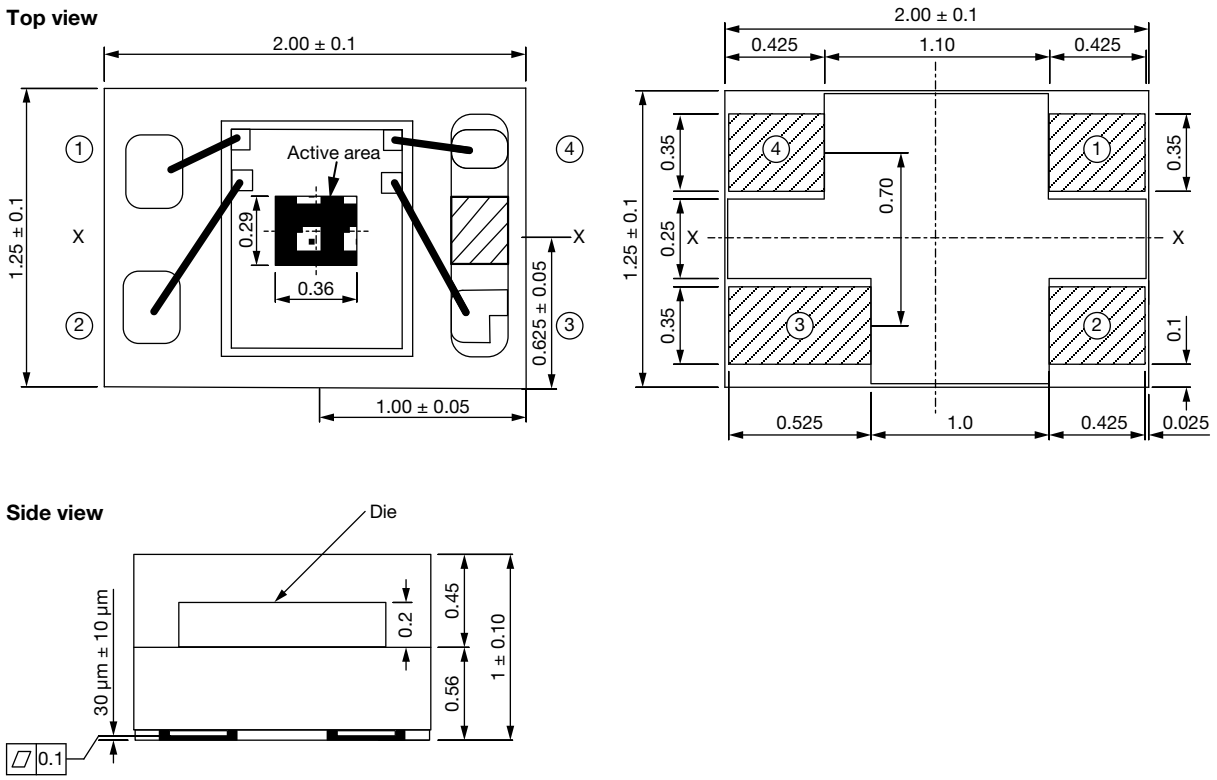

Fig. 8 - VEML3328A3OG Package Dimensions

For technical questions, contact: consumersensors@vishay.com
THIS DOCUMENT IS SUBJECT TO CHANGE WITHOUT NOTICE. THE PRODUCTS DESCRIBED HEREIN AND THIS DOCUMENT ARE SUBJECT TO SPECIFIC DISCLAIMERS, SET FORTH AT www.vishay.com/doc?91000

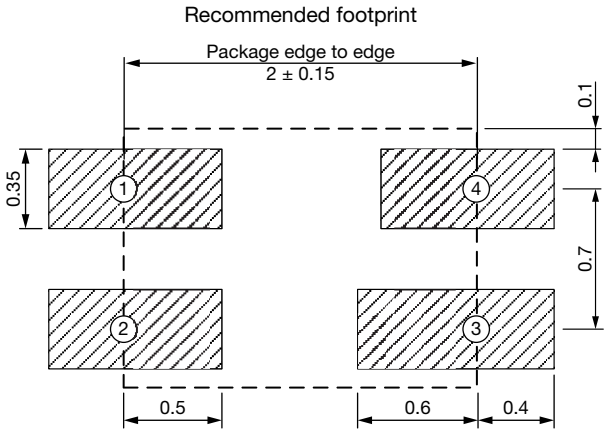

Fig. 9 - VEML3328A3OG PCB Layout Footprint

RECOMMENDED STORAGE AND REBAKING CONDITIONS				
PARAMETER	**CONDITIONS**	**MIN.**	**MAX.**	**UNIT**
Storage temperature		5	50	°C
Relative humidity		-	60	%
Open time		-	168	h
Total time	From the date code on the aluminized envelope (unopened)	-	12	months
Rebaking	Tape and reel: 60 °C	-	22	h
	Tube: 60 °C	-	22	

For technical questions, contact: consumersensors@vishay.com
THIS DOCUMENT IS SUBJECT TO CHANGE WITHOUT NOTICE. THE PRODUCTS DESCRIBED HEREIN AND THIS DOCUMENT ARE SUBJECT TO SPECIFIC DISCLAIMERS, SET FORTH AT www.vishay.com/doc?91000

RECOMMENDED INFRARED REFLOW

Soldering conditions which are based on J-STD-020 C

IR REFLOW PROFILE CONDITION			
PARAMETER	**CONDITIONS**	**TEMPERATURE**	**TIME**
Peak temperature		255 °C + 0 °C / - 5 °C (max.: 260 °C)	10 s
Preheat temperature range and timing		150 °C to 200 °C	60 s to 180 s
Timing within 5 °C to peak temperature		-	10 s to 30 s
Timing maintained above temperature / time		217 °C	60 s to 150 s
Timing from 25 °C to peak temperature		-	8 min (max.)
Ramp-up rate		3 °C/s (max.)	-
Ramp-down rate		6 °C/s (max.)	-

Recommend Normal Solder Reflow is 235 °C to 255 °C

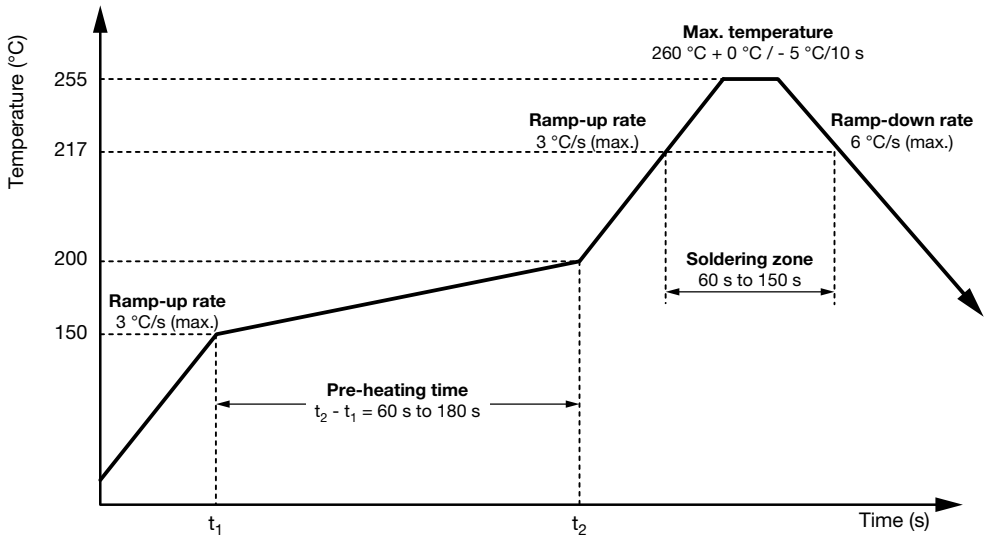

Fig. 10 - VEML3328 OPLGA Solder Reflow Profile Chart

RECOMMENDED IRON TIP SOLDERING CONDITION AND WARNING HANDLING

1. Solder the device with the following conditions:
   1.1. Soldering temperature: 400 °C (max.)
   1.2. Soldering time: 3 s (max.)
2. If the temperature of the method portion rises in addition to the residual stress between the leads, the possibility that an open or short circuit occurs due to the deformation or destruction of the resin increases
3. The following methods: VPS and wave soldering, have not been suggested for the component assembly
4. Cleaning method conditions:
   4.1. Solvent: methyl alcohol, ethyl alcohol, isopropyl alcohol
   4.2. Solvent temperature < 45 °C (max.)
   4.3. Time: 3 min (min.)

For technical questions, contact: consumersensors@vishay.com
THIS DOCUMENT IS SUBJECT TO CHANGE WITHOUT NOTICE. THE PRODUCTS DESCRIBED HEREIN AND THIS DOCUMENT ARE SUBJECT TO SPECIFIC DISCLAIMERS, SET FORTH AT www.vishay.com/doc?91000

TAPE PACKAGING INFORMATION in millimeters

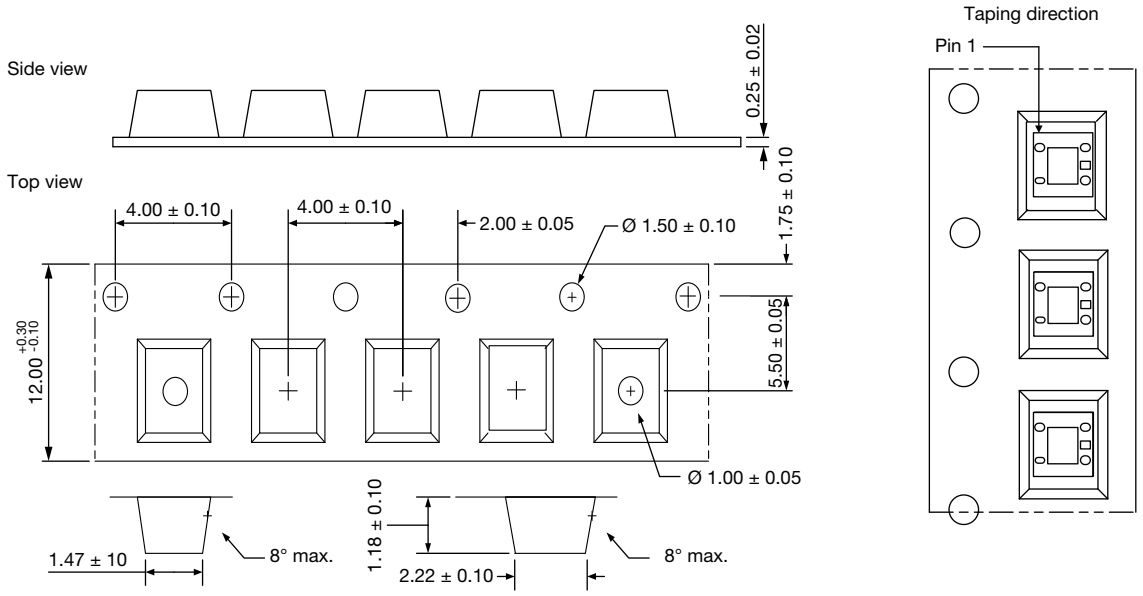

Fig. 11 - VEML3328 A3OG Package Carrier Tape

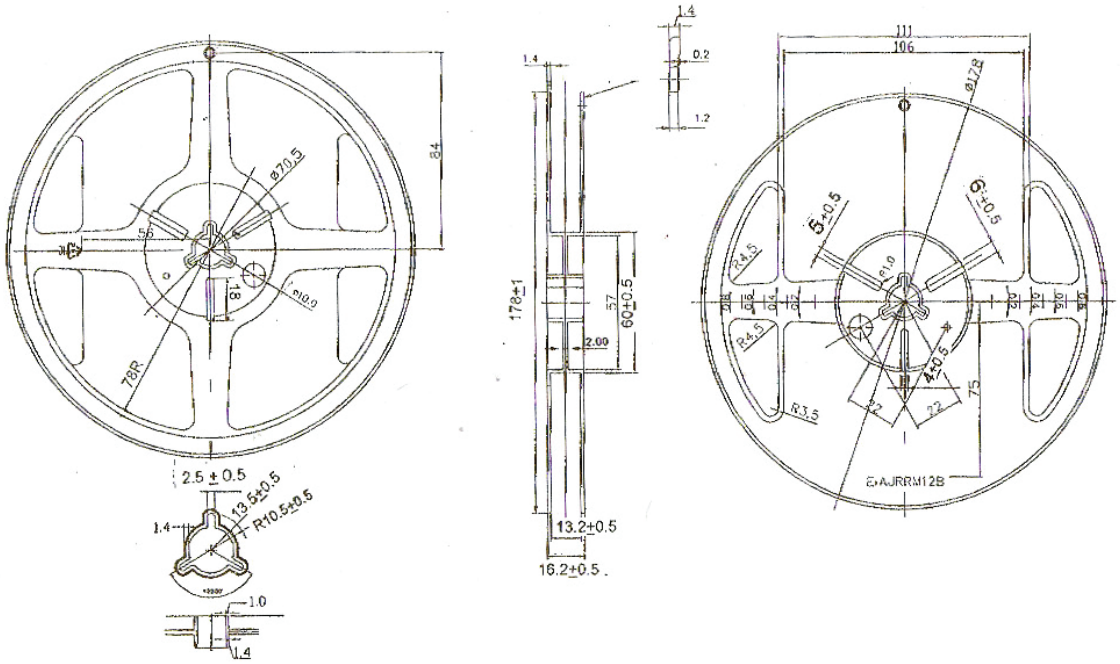

Fig. 12 - Reel Dimensions

For technical questions, contact: consumersensors@vishay.com
THIS DOCUMENT IS SUBJECT TO CHANGE WITHOUT NOTICE. THE PRODUCTS DESCRIBED HEREIN AND THIS DOCUMENT ARE SUBJECT TO SPECIFIC DISCLAIMERS, SET FORTH AT www.vishay.com/doc?91000

Disclaimer

ALL PRODUCT, PRODUCT SPECIFICATIONS AND DATA ARE SUBJECT TO CHANGE WITHOUT NOTICE TO IMPROVE RELIABILITY, FUNCTION OR DESIGN OR OTHERWISE.

Vishay Intertechnology, Inc., its affiliates, agents, and employees, and all persons acting on its or their behalf (collectively, “Vishay”), disclaim any and all liability for any errors, inaccuracies or incompleteness contained in any datasheet or in any other disclosure relating to any product.

Vishay makes no warranty, representation or guarantee regarding the suitability of the products for any particular purpose or the continuing production of any product. To the maximum extent permitted by applicable law, Vishay disclaims (i) any and all liability arising out of the application or use of any product, (ii) any and all liability, including without limitation special, consequential or incidental damages, and (iii) any and all implied warranties, including warranties of fitness for particular purpose, non-infringement and merchantability.

Statements regarding the suitability of products for certain types of applications are based on Vishay's knowledge of typical requirements that are often placed on Vishay products in generic applications. Such statements are not binding statements about the suitability of products for a particular application. It is the customer's responsibility to validate that a particular product with the properties described in the product specification is suitable for use in a particular application. Parameters provided in datasheets and / or specifications may vary in different applications and performance may vary over time. All operating parameters, including typical parameters, must be validated for each customer application by the customer's technical experts. Product specifications do not expand or otherwise modify Vishay's terms and conditions of purchase, including but not limited to the warranty expressed therein.

Hyperlinks included in this datasheet may direct users to third-party websites. These links are provided as a convenience and for informational purposes only. Inclusion of these hyperlinks does not constitute an endorsement or an approval by Vishay of any of the products, services or opinions of the corporation, organization or individual associated with the third-party website. Vishay disclaims any and all liability and bears no responsibility for the accuracy, legality or content of the third-party website or for that of subsequent links.

Vishay products are not designed for use in life-saving or life-sustaining applications or any application in which the failure of the Vishay product could result in personal injury or death unless specifically qualified in writing by Vishay. Customers using or selling Vishay products not expressly indicated for use in such applications do so at their own risk. Please contact authorized Vishay personnel to obtain written terms and conditions regarding products designed for such applications.

No license, express or implied, by estoppel or otherwise, to any intellectual property rights is granted by this document or by any conduct of Vishay. Product names and markings noted herein may be trademarks of their respective owners.

© 2026 VISHAY INTERTECHNOLOGY, INC. ALL RIGHTS RESERVED

THIS DOCUMENT IS SUBJECT TO CHANGE WITHOUT NOTICE. THE PRODUCTS DESCRIBED HEREIN AND THIS DOCUMENT ARE SUBJECT TO SPECIFIC DISCLAIMERS, SET FORTH AT www.vishay.com/doc?91000