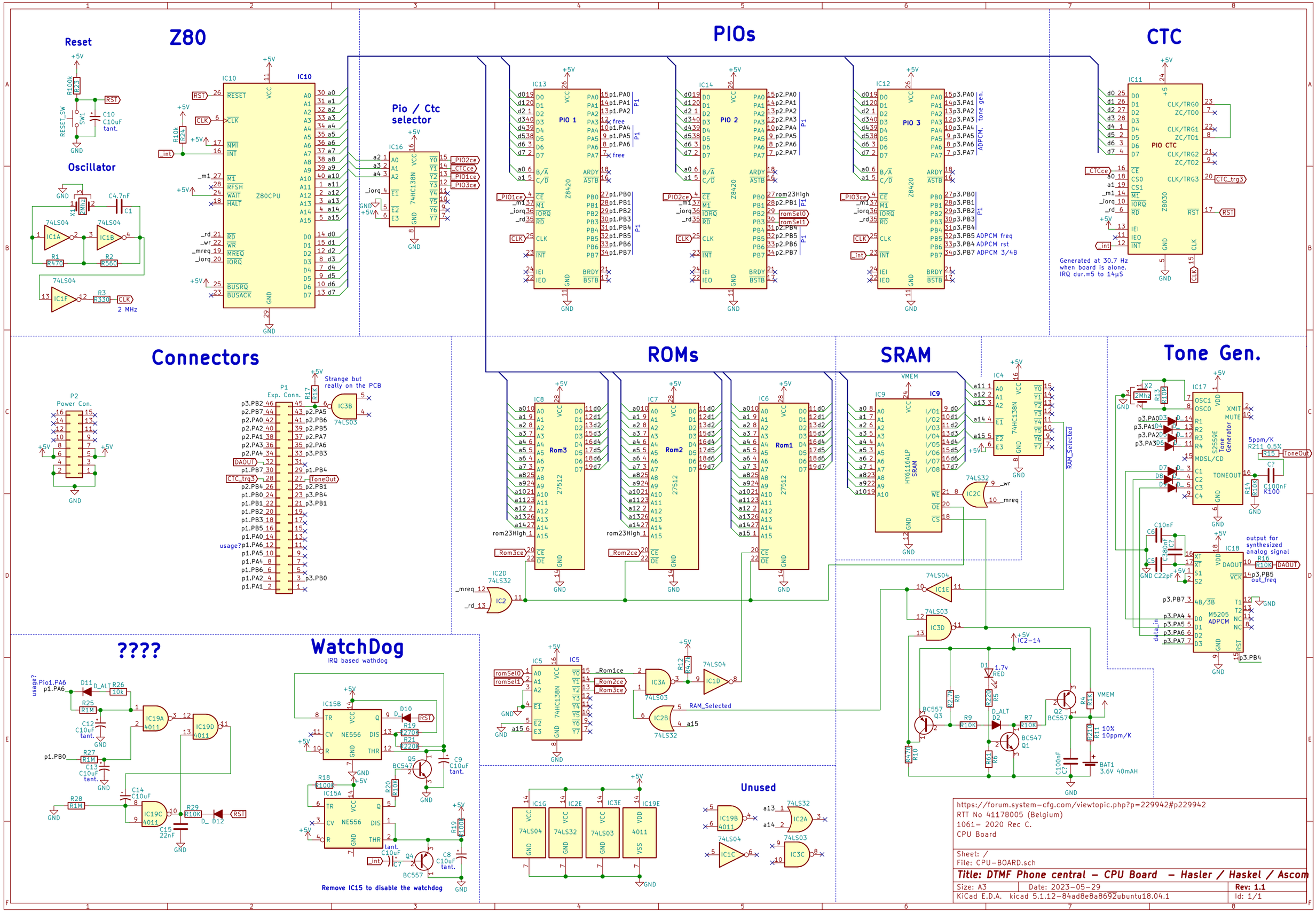
Reset
Z80
PIOs
CTC
Oscillator
Pio / Ctc selector
Connectors
ROMs
SRAM
Tone Gen.
????
WatchDog
IRQ based wathdog
Unused
Generated at 30.7 Hz when board is alone. IRQ dur.=5 to 14µs
Remove IC15 to disable the watchdog
https://forum.system-cfg.com/viewtopic.php?p=229942#p229942
RTT No 41178005 (Belgium)
1061- 2020 Rec C.
CPU Board
Sheet: /
File: CPU-BOARD.sch
Title: DTMF Phone central - CPU Board - Hasler / Haskel / Ascom
Size: A3
Date: 2023-05-29
Rev: 1.1
KiCad E.D.A. kicad 5.1.12-84ad8e8a8692ubuntu18.04.1
Id: 1/1