Submittal Review Response

Project Name:	***Hilo WWTP Rehabilitation and Replacement Project Phase 1***
Submittal No.:	***15211-001.0***
Date:	***9/23/2025***

Client:	County of Hawai‘i	**Carollo Project No.:**	203975
Contractor:	Nan, Inc.		
Submittal Name:	Ductile Iron Pipe-AWWA C151		
Reviewed By:	Mason Drapesa-Morse, Preston Merrell, Kyle Leonard		

SUBMITTAL REVIEW

Review is for general compliance with contract documents. No responsibility is assumed by Carollo for correctness of quantities, dimensions, and details. No deviation or variation is approved unless specifically addressed in these review comments. Refer to Section 01330 for additional requirements. The Contractor shall assume full responsibility for coordination with all other trades and deviations from contract requirements.

Approved	☐	No Exceptions
	☐	Make Corrections Noted - See Comments
	☐	Make Corrections Noted - Confirm
Not Approved	☒	Correct and Resubmit
	☐	Rejected - See Remarks
Receipt Acknowledged	☐	Filed for Record
	☐	With Comments - Resubmit

Review Comments:

1. Contractor’s variance request for mechanical joint fittings is denied. Contractor shall provide integrally restrained mechanical joints or integrally restrained push-on joints as called out in the Piping Schedule in Section 15052 and Section 15211-2.01.B.5 and 6.

2. Per Section 15211-1.03.C, submit manufacturer qualifications showing at least 5 years’ experience with the specified material.

3. Per Section 15211-1.03.D, submit manufacturer’s coating and lining Quality Assurance Manual.

4. Per Section 15211-1.03.E, provide shop drawings with layout, alignment, valves, fittings, joints, and connections, plus photos and descriptions of fittings, gaskets, couplings, linings, and coatings. Submittal only includes a tabular product list and a few cut sheets. If the intent of this package is limited to manufacturer/product approval, note that shop drawings are still required and must be submitted and approved prior to fabrication.

5. Per Section 15211-1.03.F, confirm that the manufacturer's test reports for glass lining (holiday detection, compliance with material requirements, and coating rep reports) will be provided prior to shipment of materials.

6. Per Section 15211-2.01.A.1, pipe must be manufactured by American, McWane, SIP, or U.S. Pipe. Submittal lists American (acceptable) and C&B Piping (not listed). C&B is not identified in the spec as an approved pipe or specialty manufacturer. Confirm that all pipe barrels will come from an approved manufacturer and that C&B's role is limited to fabricating specials from approved pipe. If C&B is proposed as a pipe or fitting manufacturer, it is not compliant.

7. Per Section 15211-2.01.A.2, pipe shall meet the pressure/thickness class in the piping schedule (Section 15052). Submittal lists CL51 and CL53 but does not reference the schedule. Provide a cross-reference table confirming that the submitted classes match the required classes for each pipe size and service.

8. Per Section 15211-2.01.A.2.c, pipe must be manufactured from >90% recycled material. No confirmation provided in submittal.

9. Per Section 15211-2.01.A.3, flanged pipe must comply with AWWA C115, min Class 53. Submittal lists C&B Piping fabricated flanged joints, but no data proving C115 compliance.

10. Per Section 15211-2.01.B.1, flanged joints must be long hub ductile iron, machined after threading, with SBR gaskets. Submittal does not provide flange hub details, machining process, or gasket data. Provide manufacturer data verifying compliance with hub dimensions, machining requirements, and gasket material.

11. Per Section 15211-2.01.C.1, compact fittings conforming to AWWA C153 are not allowed; only full-body fittings per AWWA C110 are permitted. Submittal proposes C153 fittings which are not allowed. Revise to show only C110 full-body fittings.

12. Provide a cross-reference table confirming what linings and coatings will be used for each pipe size and service.

13. Per Section 15211-2.01.D.5, glass linings must be Ferrock MEH-32 or Vitco SG-14. Submittal lists "glass lining" but does not identify the manufacturer or product. Provide manufacturer's technical data confirming the proposed glass lining complies with the approved products specified.

14. Per Section 15211-2.02.A-B, polyethylene encasement must be supplied by pipe manufacturer and be either 2-layer LLDPE, HDCLPE, or V-Bio. Submittal does not include any encasement product data.

15. The Piping Schedule in Section 15052 does not call out any unrestrained ductile iron piping or is it allowed in Section 15211. Therefore, submitted American Fastite joint pipe is not allowed to be used and shall be removed from the submittal.

16. The Piping Schedule in Section 15052 does not call out any standard mechanical fittings or are they allowed in Section 15211. Therefore, submitted mechanical joints and megaflange/foster adapter/megacouplings/megalugs/mid span restraint/non-restrained mechanical joint assembly are not allowed to be used and shall be removed from the submittal.

17. PVC pipe restraints shall be removed from the submittal and submitted under the appropriate specification section.

☐ High Priority

CONTRACTOR SUBMITTAL TRANSMITTAL FORM REV. A

Owner:	County of Hawaii		
Contractor:	Nan, Inc.	**Project No.:**	WW-4705R
Project Name:	Hilo WWTP Phase 1	**Submittal Number:**	15211-001.0
Submittal Title:	Ductile Iron Pipe: AWWA C151	☐ For Information Only	
TO:	County		
From:	Nan Inc.		

Specification No. and Subject of Submittal / Equipment Supplier			
Spec:	15211	**Paragraph:**	1.03-B
Authored By:	C & B Piping (W), Inc.	**Date Submitted:**	8/4/2025

Submittal Certification

Check Either (A) or (B):

☐ (A) We have verified that the equipment or material contained in this submittal meets all the requirements specified in the project manual or shown on the contract drawings with no exceptions.

☑ (B) We have verified that the equipment or material contained in this submittal meets all the requirements specified in the project manual or shown on the contract drawings except for the deviations listed.

Certification Statement: By this submittal, I hereby represent that I have determined and verified all field measurements, field construction criteria, materials, dimensions, catalog numbers and similar data, and I have checked and coordinated each item with other applicable approved shop drawings and all Contract requirements.

General Contractor's Reviewer's Signature:

Printed Name and Title: Nishant More

In the event, Contractor believes the Submittal response does or will cause a change to the requirements of the Contract, Contractor shall immediately give written notice stating that Contractor considers the response to be a Change Order.

Firm: **Signature:** **Date Returned:**

PM/CM Office Use

Date Received GC to PM/CM:

Date Received PM/CM to Reviewer:

Date Received Reviewer to PM/CM:

Date Sent PM/CM to GC:

Nan, Inc

PROJECT: HILO WWTP REHABILITATION AND REPLACEMENT PROJECT - PHASE 1

JOB NO. WW-4705R

THIS SUBMITTAL HAS BEEN CHECKED BY THIS CONTRACTOR. IT IS CERTIFIED CORRECT, COMPLETE, AND IN COMPLIANCE WITH CONTRACT DRAWINGS AND SPECIFICATIONS. ALL AFFECTED CONTRACTORS AND SUPPLIERS ARE AWARE OF, AND WILL INTEGRATE THIS SUBMITTAL (UPON APPROVAL) INTO THEIR OWN WORK.

DATE RECEIVED 8/4/2025
SPECIFICATION SECTION # 15211
SPECIFICATION Ductile Iron Pipe
PARAGRAPH 1.03 B
DRAWING N/A
SUBCONTRACTOR N/A
SUPPLIER C & B Piping (W), Inc.
MANUFACTURER N/A

CERTIFIED BY CQCM or Designee :_____

VARIANCE REQUEST FORM

Nan Inc

License #ABC-19711
161 Silva St.
Hilo, Hi 96720
Telephone: (808) 842-4929
Facsimile: (808) 841-8281

Hilo Wastewater Treatment Plant Phase 1
Contract No. WW-4705R

VARIANCE

Request Form

Variance Request

**Clearly and Concisely describe the nature of your request by completing the following questions below. By submitting the Variance Request form, Contractor acknowledges that they understand and accept the limitation of this form and agree that the information provided does not guarantee the approval of the Variance request. The decision to grant or deny a variance is at the sole discretion of the relevant authority or entity responsible for reviewing such requests.*

Specification section 15211 – Ductile Iron Pipe: AWWA C151

1. What are the benefits the variance has to the Government?

County and Nan Inc will reap the benefits such as; meeting the expectations of the schedule by reduced lead time on the product proposed i.e., Standard Mechanical joint fittings as compared to the Proprietary Restrained Joint fittings and cost savings in terms of installation if potential field adjustments are required.

2. What are the positive and negative impacts to the project and Government if the variance is accepted?

Pursuing Standard Mechanical joints will significantly facilitate manufacturing, procurement, upkeeping schedule, minimal cost impact, smoother field adjustments, and possibly lessen change order cost.

3. Discuss how the variance is "equal to" or "better than" the specification requirement.

Standard Mechanical Joint Fittings comes with equal or rather more advantages, starting with the highly reduced lead time aspect, easement in installation, managing schedule, and the ability to be flexible with existing conditions.

Nan Inc

License #ABC-19711
161 Silva St.
Hilo, Hi 96720
Telephone: (808) 842-4929
Facsimile: (808) 841-8281

4. What is the cost of the product/material that is originally specified?

Nan Inc is in the process of determining potential cost savings with the manufacturer.

SPECIFICATION SECTION 15211

SECTION 15211

DUCTILE IRON PIPE: AWWA C151

PART 1 GENERAL

1.01 SUMMARY

A. Section includes: Ductile iron pipe, joints, fittings, gaskets, and pipe linings and coatings.

1.02 REFERENCES

A. American Society of Mechanical Engineers (ASME):
   1. B16.1 - Gray Iron Pipe Flanges and Flanged Fittings: Classes 25, 125, and 250.

B. American Water Works Association (AWWA):
   1. C104 - Standard for Cement-Mortar Lining for Ductile-Iron Pipe and Fittings.
   2. C105 - Polyethylene Encasement for Ductile-Iron Pipe Systems.
   3. C110 - Standard for Ductile-Iron and Gray-Iron Fittings.
   4. C111 - Standard for Rubber-Gasket Joints for Ductile-Iron Pressure Pipe and Fittings.
   5. C115 - Flanged Ductile Iron Pipe with Ductile-Iron or Gray-Iron Threaded Flanges.
   6. C150 - Standard for Thickness Design of Ductile-Iron Pipe.
   7. C151 - Standard for Ductile-Iron Pipe, Centrifugally Cast.
   8. C600 - Installation of Ductile Iron Water Mains and Their Appurtenances.
   9. C606 - Standard for Grooved and Shouldered Joints.

C. American Welding Society (AWS):
   1. D11.2 - Guide for Welding Iron Castings.

D. ASTM International (ASTM):
   1. A47 - Standard Specifications for Ferritic Malleable Iron Castings.
   2. A183 - Standard Specifications for Carbon Steel Track Bolts and Nuts.
   3. A536 - Standard Specifications for Ductile Iron Castings.
   4. C283 - Standard Test Methods for Resistance of Porcelain Enameled Utensils to Boiling Acid.
   5. D792 - Standard Test Methods for Density and Specific Gravity (Relative Density) of Plastics by Displacement.

E. NACE International (NACE):
   1. SP0188 - Discontinuity (Holiday) Testing of New Protective Coatings on Conductive Substrates.

F. National Association of Pipe Fabricators, Inc. (NAPF):
   1. 500-03 - Surface Preparation Standard for Ductile Iron Pipe and Fittings in Exposed Locations Receiving Special External Coatings and/or Special Internal Linings.

G. Society for Protective Coatings (SSPC):
   1. PA-2 - Measurement of Dry Coating Thickness With Magnetic Gages.

1.03 SUBMITTALS

A. Submit as specified in Section 01330 - Submittal Procedures.

B. Product data: As specified in Section 15052 - Common Work Results for General Piping.

C. Manufacturer's qualifications:
   1. Manufacturer qualifications and list of projects using the specified material: 5 years minimum.

D. Manufacturer's Quality Assurance Manual:
   1. Submit manufacturer's coating and lining application quality assurance manual to Engineer prior to beginning coating application:
      a. Strict conformance to the requirements of the manual will be required.
      b. Deviation from the requirements of the manual will be grounds for the Engineer to reject the applied coating.

E. Shop drawings:
   1. Detailed layout drawings showing alignment of pipes, location of valves, fittings, and appurtenances, types of joints, and connections to pipelines or structures.
   2. Photographs, drawings, and descriptions of fittings, gaskets, couplings, grooving of pipe and fittings, pipe linings, and coatings.

F. Provide manufacturer’s test reports:
   1. On glass lining certifying successful performance of holiday detection tests:
      a. This documentation shall identify each piece by mark designation, and show the actual test results during the final inspection by the manufacturer prior to shipment.
      b. Acceptance criteria for glass lining shall be as specified under Field Quality Control.
   2. On glass-lined pipe certifying compliance with specified material requirements for glass-lining.
   3. Include Coating Manufacturer’s Technical Representative’s reports.
   4. At the request of the Engineer, perform a maximum of 2 jobsite test verifications on 12 randomly selected segments per test verification.

1.04 QUALITY ASSURANCE

A. Ductile iron pipe shall be supplied by a single manufacturer.

B. Hydrostatically test each joint of ductile iron pipe in accordance with AWWA C151.

C. Pre-installation meeting:
   1. Arrange for Coating Manufacturer’s Technical Representative to attend preconstruction conferences, and to make periodic visits to factory or shop to inspect surface preparation of pipe, fittings, and accessories; and to inspect

application of linings to interior and coatings to exterior of pipe, fittings, and accessories.

1.05 DELIVERY, STORAGE, AND HANDLING

A. Block piping and associated fittings for shipment to prevent damage to coatings and linings.

B. Carefully handle piping and associated fittings during loading, unloading, and installation:
   1. Do not drop piping material from cars or trucks.
   2. Lower piping by mechanical means.
   3. Do not drop or pound pipe to fit grade.

C. Glass lined pipe and fittings must be handled only from the outside:
   1. No forks, chains, straps, hooks, or other lifting device shall be placed inside the pipe or fittings for lifting, positioning, or laying.

D. Protect gaskets and polyethylene encasement from long-term exposure to sunlight.

E. Store piping, fittings, and other accessories such that they do not accumulate and hold rainwater, dirt, and debris.

1.06 WARRANTY

A. Provide warranty as specified in Section 01783 - Warranties and Bonds.

PART 2 PRODUCTS

2.01 MANUFACTURED UNITS

A. Ductile iron piping:
   1. Manufacturers: One of the following or equal:
      a. American Cast Iron Pipe Co.
      b. McWane Ductile.
      c. SIP Industries.
      d. U.S. Pipe.
   2. Typical type:
      a. In accordance with AWWA C150 and AWWA C151.
      b. Pressure class or special thickness class as indicated in the Piping Schedule provided in Section 15052 - Common Work Results for General Piping.
      c. Manufactured from greater than 90 percent recycled material.
   3. Type with screw-on flanges:
      a. In accordance with AWWA C115 with minimum special thickness Class 53 wall thickness unless otherwise specified or indicated on the Drawings.
      b. Manufactured from greater than 90 percent recycled material.
   4. Type with grooved couplings:
      a. Special thickness class as indicated in the Piping Schedule as specified in Section 15052 - Common Work Results for General Piping.

b. Manufactured from greater than 90 percent recycled material.

B. Joints:
1. Flanged joints:
a. Screw-on flanges: Comply with the diameter, thickness, drilling, and other characteristics in accordance with ASME B16.1. In addition, comply with the following requirements:
1) Ductile iron.
2) Long hub, threaded, and specially designed for ductile iron pipe.
3) After attaching to pipe, machine flange face to make pipe end and flange even and perpendicular to the axis of the pipe.
b. Bolt holes on flanges: 2-holed and aligned at both ends of pipe.
c. Cap screw or stud bolt holes: Tapped.
d. Bolts and nuts: As specified in Section 15052 - Common Work Results for General Piping.
e. Gaskets: Standard styrene butadiene copolymer (SBR) unless specified otherwise in Section 15052 - Common Work Results for General Piping.
2. Grooved joints: In accordance with AWWA C606, as complemented and modified below, radius-cut type, with following components:
a. Couplings: Rigid type, cast from ductile iron in accordance with ASTM A536, Grade 65-45-12, or malleable iron in accordance with ASTM A47, Grade 32510.
b. Bolts and nuts: In accordance with ASTM A183, Grade 2.
c. Gaskets: Capable of being applied on surface of piping with cavities to provide for an improved seal with the internal piping pressure. Material to be used for following services:
1) For liquid service: NBR.
2) For air service: Fluoroelastomer.
3) For hot water service: EPDM.
d. Fittings: In accordance with AWWA C606, rigid radius-cut groove:
1) Center-to-center dimensions: In accordance with AWWA C110.
2) Wall thickness and other characteristics: In accordance with AWWA C606.
e. Flanged unit connections: Flanged to grooved joint adapters or a long enough spool with one end flanged and the other end grooved to prevent interference with the operation of adjacent valves, pumps, or other items.
3. Mechanical joints: In accordance with AWWA C111.
4. Push-on rubber gasket joints: In accordance with AWWA C111.
5. Integrally restrained mechanical joints:
a. Application:
1) Where designation Mech Rest or RMJ is specified in the Piping Schedule provided in Section 15052 - Common Work Results for General Piping or indicated on the Drawings.
b. Design:
1) Integral retainer weldment type or lugged type joint with Type 304 stainless steel rods and nuts.

2) Restrained mechanical joints of the configuration which utilizes a gripping or friction force for restraint will not be acceptable:
   a) Exception: Mechanical wedge action joint restraints will be allowed only at connections to existing piping; EBAA Iron, Inc. Megalug® Series 1100 or equal.
      (1) Materials:
         (a) Gland body: Ductile iron in accordance with ASTM A536.
         (b) Wedges and wedge actuating components: Ductile iron in accordance with ASTM A536.Wedges shall be heat treated to a minimum of 370 BHN.
         (c) Actuating bolts and nuts: Ductile iron in accordance with ASTM A536. Provide torque-limiting twist off components to ensure proper installation.
         (d) Gaskets: As specified in Section 15052 - Common Work Results for General Piping.
      (2) Coatings:
         (a) Provide manufacturer applied coating system.
         (b) Manufacturers: EBAA Iron Inc., Mega-Bond®, or equal.
      (3) Working pressure:
         (a) Shall include a minimum safety factor of 2:1.
         (b) For sizes 3- through 16-inch: 350 pounds per square inch.
         (c) For sizes 18- through 48-inch: 250 pounds per square inch.
      (4) Restraint shall consist of multiple gripping wedges incorporated into a follower gland meeting the requirements of AWWA C111.
      (5) Restraint must be in accordance with applicable requirements of AWWA C110 and AWWA C111 for mechanical joints.

c. Manufacturers: Where restrained mechanical joints are required, use one of the following:
   1) American Cast Iron Pipe Company, MJ Coupled Joint.
   2) U.S. Pipe, Bolt-Lok.

6. Integrally restrained push-on joints:
   a. Application:
      1) Where designation restrained push-on (RPO) as indicated in the Piping Schedule provided in Section 15052 - Common Work Results for General Piping or indicated on the Drawings.
   b. Design:
      1) Restrained push-on joints of the configuration which utilizes a gripping or friction force for restraint will not be acceptable.
         a) Exception: Push-on joint restraint harnesses will be allowed only at connections to existing piping; EBAA Iron, Inc. Megalug® Series 1700 or equal.
            (1) Materials:
               (a) Restraint and backup ring: Ductile iron in accordance with ASTM A536.

(b) Wedges and wedge actuating components: Ductile iron in accordance with ASTM A536.Wedges shall be heat treated to a minimum of 370 BHN.
(c) Actuating bolts and nuts: Ductile iron in accordance with ASTM A536. Provide torque-limiting twist off components to ensure proper installation.
(d) Tie rods: Low alloy steel in accordance with AWWA C111.
(e) Bolts and nuts, including T-bolts: As specified in 15052 - Common Work Results for General Piping.

(2) Coatings:
(a) Provide manufacturer applied coating system.
(b) Manufacturers: EBAA Iron Inc., Mega-Bond®, or equal.

(3) Working pressure:
(a) Shall include a minimum safety factor of 2:1.
(b) For sizes 3- through 16-inch: 350 pounds per square inch.
(c) For sizes 18- through 48-inch: 250 pounds per square inch.

(4) Restraint shall consist of a backup ring behind the ductile iron bell and a restraint ring consisting of multiple gripping wedges connected with number and type of tie rods as recommended by the manufacturer.

2) Suitable for the following working pressures:
a) For 4- through 24-inch pipe: 350 pounds per square inch gauge.
b) For 30- through 54-inch pipe: 250 pounds per square inch gauge.

Both for approval; AWWA 110 and AWWA 153

c. Manufacturers: One of the following:
1) U.S. Pipe, TR Flex.
2) McWane Ductile, TR Flex.
3) American Cast Iron Pipe Company, Flex Ring or Lok-Ring.

d. Limit buried joints to half the manufacturer's published allowable angular joint deflection for purposes of pipeline alignment and elimination of fittings.

C. Fittings:

1.

1. Ductile iron in accordance with AWWA C110. Compact fittings conforming to AWWA C153 are not allowed.
2. Joint type: Same as that of the associated piping as specified in Section 15052 - Common Work Results for General Piping.
3. Plain end-to-flanged joint connectors using setscrews are not acceptable.

D. Pipe linings:
1. Cement-mortar lining:
a. In accordance with AWWA C104, apply cement-mortar on clean bare metal surfaces. Extend to faces of flanges, ends of spigots, and shoulders of hubs.
b. Minimum lining thickness: Standard in accordance with AWWA C104.
c. Type of cement: Type II.

2. Asphaltic seal coat:
   a. Apply over cement mortar linings and to outside surface of pipes that will not receive another coating. Apply in accordance with AWWA C151.
3. Elastomeric polyurethane (100 percent solids) lining:
   a. As specified in Section 09960 - High-Performance Coatings.
4. Ceramic epoxy lining:
   a. Manufacturers: One of the following:
      1) PROTECTO 401.
      2) SP-2000W.
   b. Material: Amine cured Novolac epoxy containing at least 20 percent by volume of ceramic quartz pigment.
   c. Minimum dry film thickness (DFT): 40 mills.
   d. Application:
      1) The lining shall only be applied by a manufacturer-authorized representative with no less than 5 years of experience in applying the specified material.
      2) The application of the lining shall be performed in accordance with manufacturer's published specifications.
      3) Pipe and fittings shall be delivered to application facility with no interior lining.
      4) Interior of pipe shall be abrasive blasted per manufacturer's specifications.
   e. Coverage:
      1) Gasket and spigot ends-on joints: Provide 6 mils minimum and 10 mils maximum coverage using joint compound as specified by the manufacturer for the gasket area and spigot ends.
      2) Mechanical joints: Extend lining from spigot end to edge of gauging ring.
      3) Number of coats: As recommended by the lining manufacturer.
   f. Source quality control:
      1) Test pipe and fitting lining with a magnetic film thickness gauge. Perform testing in accordance with the method outlined in SSPC PA-2 Film Thickness Rating.
      2) Test lining integrity of pipes using a holiday detection testing instrument set at the voltage as specified by the coating manufacturer:
         a) Repair all holidays with joint compound in accordance with the recommendations of the coating manufacturer, and re-test.
      3) Discard piping or reline piping when pinholes or discontinuities are found.
5. Glass lining:
   a. Manufacturers: One of the following:
      1) Water Works Manufacturing, Ferrock MEH-32 Lining.
      2) Vitco Corporation, SG-14 Lining.
   b. Material: Special glasses and inorganic materials suited for lining of sewage, sludge, and scum piping with the following characteristics:
      1) Thickness: 0.008 to 0.012 inch.
      2) Hardness: 5 to 6 on the Mohs Scale.
      3) Density: 2.5 to 3.0 grams per cubic centimeter, measured in accordance with ASTM D792.

4) Thermal shock resistance: Capable of withstanding 350 degrees Fahrenheit change from 430 degrees Fahrenheit to 80 degrees Fahrenheit without crazing, blistering, or spalling.
5) Gloss retention: Capable of retaining gloss after immersion in an 8 percent sulfuric acid solution at 148 degrees Fahrenheit for 10 minutes.
6) Weight loss: Maximum 3 milligrams per square inch when tested in accordance with ASTM C283.

c. Fabrication:
1) Use piping that is suitable for glass lining with minimum Class 53 wall thickness after application of glass lining.
2) Machine interior of pipe. Bore or grit blast in accordance with NAPF 500-03 prior to application of glass lining.
3) Screw factory assembled flanges on pipe, align boltholes, and flange faces, unless otherwise specified.
4) Apply lining to surfaces free of chemicals.
5) Place piping in furnaces specially designed for heating piping until glass melts and fuses with an integral molecular bond to the base metal.

E. Coatings:
1. Asphalt varnish: Factory applied.
2. Primer:
a. Factory applied for field coating.
b. Compatible with materials as specified in Section 09960 - High-Performance Coatings.

2.02 POLYETHYLENE ENCASEMENT

A. General:
1. Polyethylene encasement shall be supplied by the pipe manufacturer.

B. Materials: Supply one of the following polyethylene encasements:
1. 2 layers of linear low-density polyethylene (LLDPE) film, minimum thickness of 8 mils in accordance with AWWA C105; or
2. Single layer of high-density, cross-laminated polyethylene (HDCLPE) film, minimum thickness of 4 mils in accordance with AWWA C105.
3. Single layer of V-Bio® enhanced polyethylene encasement (3 layers of co-extruded LLDPE film with anti-microbial additive and volatile corrosion inhibitor infused on the inside surface), meeting all requirements of AWWA C105.

PART 3 EXECUTION

3.01 INSTALLATION

A. General:
1. Install ductile iron piping in accordance with AWWA C600, modified as specified in Section 15052 - Common Work Results for General Piping.

2. For underground piping, the trenching, backfill, and compaction: As specified in Section 02318 - Trenching.

B. Polyethylene encasement:
1. Wrap all buried ductile iron pipe and fittings in 2 layers of loose low density polyethylene wrap or a single layer of high-density polyethylene wrap in accordance with AWWA C105.
2. Polyethylene encasement shall be continuous and terminated neatly at connections to below grade equipment or structures.
3. At wall penetrations, extend encasement to the wall and neatly terminate.
4. At slab penetrations, extend encasement to 2 inches below the top of slab and neatly terminate.
5. When rising vertically in unimproved areas, extend encasement 6 inches above existing grade and neatly terminate.
6. Repair tears and make joints with 2 layers of plastic tape.
7. All work shall be inspected prior to backfilling of pipe and associated items.

C. Joints:
1. Install types of joints as specified in the piping schedule provided in Section 15052 - Common Work Results for General Piping.
2. Mechanical joints are not acceptable in above ground applications.
3. Grooved joints:
   a. Install piping with grooved joints where specified in the piping schedule as specified in Section 15052 - Common Work Results for General Piping or indicated on the Drawings.
   b. Assemble grooved joints in accordance with manufacturer's published instructions.
   c. Support grooved-end pipe in accordance with manufacturer's published instructions:
      1) Install at least 1 support between consecutive couplings.
   d. Grooved joints may be installed where flanged joints are scheduled, except under the following conditions:
      1) In underground and underwater installations.
      2) In piping subject to test pressure of 150 pounds per square inch gauge or more.
      3) In steam and in combustible gas piping systems.
      4) In sludge and scum piping designed to be steam cleaned as indicated on the Drawings.
      5) When wall thickness of pipe is less than the minimum recommended in published instructions by the manufacturer of the grooved end coupling and these Specifications.
   e. Make connections to flanged valves, pumps, and piping appurtenances by either:
      1) Flanged-to-grooved joint adapters.
      2) Flanged-by-grooved end pipe spool of sufficient length to prevent interference with the operation of adjacent valve, pumps, or other items.
      3) Integrally cast flanged-by-grooved end pipe fittings.

f. Except for closure pieces approved by the Engineer, field grooving of pipe will not be permitted:
   1) All field grooving will be done in the presence of and approved by the Engineer.

D. Tapping ductile iron pipe:
   1. Direct tapping of ductile iron pipe may be performed but is limited to the following conditions:
      a. Maximum allowable tap diameter by pipe diameter and pressure class:

Pipe Size (inches)	Pressure Class				
	150	200	250	300	350
	Maximum Allowable Direct Tap Size (inches)				
3	-	-	-	-	3/4
4	-	-	-	-	3/4
6	-	-	-	-	1
8	-	-	-	-	1
10	-	-	-	-	1
12	-	-	-	-	1-1/4
14	-	-	1-1/4	1-1/2	1-1/2
16	-	-	1-1/2	2	2
18	-	-	2	2	2
20	-	-	2	2	2
24	-	2	2	2	2

      b. The maximum allowable tap diameter for pipelines greater than 24 inches is 2 inches.
      c. Two layers of 3-mil thread sealant are required to minimize the torque required to affect a watertight connection.
   2. Direct tapping of glass lined ductile iron pipe may be performed only when approved in writing by the Engineer. Direct tapping of glass lined pipe shall be performed in accordance with the above conditions for tapping ductile iron pipe in addition to the following conditions:
      a. Drilling and tapping shall be performed using a hole saw:
         1) Use of a large drill bit is not acceptable.
      b. As the hole saw approaches the glass lining, lessen the inward pressure to avoid excess chipping or cracking of the lining.
      c. Minor chipping or spalling of the glass lining shall be repaired using an epoxy resin “glass repair kit” provided by the fabricator:
         1) Manufacturers: One of the following:
            a) Devoe - Devran 224 HS.
            b) Sherwin-Williams Co. - Sher-Tile High Solids Epoxy.
         2) Repair kit use is only allowed for areas of damage less than 1/2 inch in diameter:
            a) Larger areas of damage will require replacement.

3) Surface shall be prepared and repair kit shall be applied in accordance with manufacturer and/or fabricator's instructions.

3.02 FIELD QUALITY CONTROL

A. Testing ductile iron piping:
   1. Test as specified in Section 15052 - Common Work Results for General Piping and Section 15956 - Piping Systems Testing.
   2. Do not test sections longer than 1/2 mile in total pipe length.

B. Repair damaged cement mortar lining to match quality, thickness, and bonding of original lining in accordance with AWWA C104:
   1. When lining cannot be repaired or repairs are defective, replace defective piping with undamaged piping.

C. Verify that interior surfaces of glass lined pipe and fittings have continuous coverage:
   1. Verify with low voltage wet sponge holiday detector in accordance with NACE SP0188.
   2. Discard glass lined ductile iron piping and fittings with voids or casting anomalies. that exceed the maximum non-visible pinholes allowances below:

Diameter	Maximum Pinholes	
	Fittings	**Pipe (per 20-foot length of pipe)**
4- to 8-inch	3-5	10-12
10- to 18-inch	5-8	18-20
20-inch and Larger	8-10	25-28

   3. Discard lined piping and fittings found to have pinholes, crazing, or fish scales, which expose the metal substrate.

END OF SECTION

C & B PIPING - DUCTILE IRON PIPE: AWWA C151

C&B PIPING (W), INC.

P.O. BOX 974
LEEDS, AL 35094
PHONE: (205) 699-0455
FAX: (205) 699-0773 www.cbpiping.com

DATE: 7/15/25

CONTRACTOR: NAN, INC.

PROJECT: HILO WWTP

BID DATE: 8/15/2024

AIS DOMESTIC MATERIAL

C&B PIPING WILL PROVIDE LAYOUT DRAWING SUBMITTALS SHOWING PIPE SYSTEMS AND ACTUAL PIPE SIZES, CLASSES, JOINTS PROPOSED FOR SUBMITTAL APPROVAL. THE DRAWINGS WILL BE SUBMITTED BY SYSTEM AS THEY ARE COMPLETED. THE SUBMITTAL PRODUCT LISTING AND ATTACHED CUT SHEETS ARE FOR REFERENCE TO COVER THE ITEMS THAT WILL BE SHOWN ON THE PIPING LAYOUT DRAWINGS.

DUCTILE IRON PIPE

NON RESTRAINED JOINT DUCTILE IRON PIPE

1) FASTITE JOINT; CL51 4" -24" CEMENT LINED — AMERICAN
2) FASTITE JOINT; CL53 4"-24" GLASS LINED — AMERICAN

NOTE: SUPPLIED SBR RUBBER GASKET, AWWA C111

RESTRAINED JOINT DUCTILE IRON PIPE

1) FLEX-RING JOINT; CL51 4" -24" CEMENT LINED — AMERICAN
2) FLEX-RING JOINT; CL53 4"-24" GLASS LINED — AMERICAN

HIGH DEFLECTION HIGH PRESSURE RESTRAINED PIPE

NOTE: SUPPLIED SBR RUBBER GASKET, AWWA C111

FABRICATED DUCTILE IRON PIPE

1) MJ COUPLE-JOINT, CL53 THICKNESS FOR 04" THRU 08" — AMERICAN
2) FLANGED JOINT, CL53 THICKNESS FOR 04" THRU 12" — C&B PIPING INC
3) GROOVED JOINT, CL53 THICKNESS FOR 04" THRU 24" — C&B PIPING INC

DUCTILE IRON FITTINGS

MECHANICAL JOINT DUCTILE IRON FITTINGS **ALTERNATE** — PRIMARY ---> TYLER UNION

1) AWWA C153, COMPACT BODY TYPE — BACKUP ---> STAR

NOTE; DEVIATION FROM THE SPEC, SUBMITTING C153 MECHANICAL JOINT FITTINGS TO USE WITH MEGALUGS IN PLACE OF PROPRIETARY RESTRAINED JOINT FITTINGS, C110 MECHANICAL JOINT FITTINGS, AND MJ COUPLE-JOINT/HARNESS LOK.

MECHANICAL JOINT DUCTILE IRON FITTINGS — PRIMARY ---> TYLER UNION

1) AWWA C110, FULL BODY TYPE — BACKUP ---> STAR

PROPRIETARY RESTRAINED DUCTILE IRON FITTINGS — AMERICAN

1) FLEX-RING RESTRAINED FITTINGS 04"- 36"

C&B PIPING (W), INC.

P.O. BOX 974
LEEDS, AL 35094
PHONE: (205) 699-0455
FAX: (205) 699-0773 www.cbpiping.com

DATE: 7/15/25

CONTRACTOR: NAN, INC.

PROJECT: HILO WWTP

BID DATE: 8/15/2024

	AIS DOMESTIC MATERIAL
FLANGED JOINT DUCTILE IRON FITTINGS, C110 FULL BODY TYPE	PRIMARY ---> TYLER UNION
1) AWWA C110, FULL BODY TYPE	BACKUP ---> STAR
GROOVED DUCTILE IRON FITTINGS	
1) VICTAULIC, 3"-24" SIZES	VICTAULIC
LINING(S) FOR DUCTILE IRON PIPE AND FITTINGS	
CEMENT MORTAR LINED	
1) TYPE II, ANSI/AWWA C104/A21.4 (STD THICKNESS)	AWWA C104
GLASS LINED	
1) CBGL911 (10MIL DFT)	C&B PIPING INC
COATING(S) FOR DUCTILE IRON PIPE AND FITTINGS	
ASPHALTIC VARNISH; 1 MIL DFT	
1) ANSI/AWWA C104/A21.4 (1 MIL DFT)	AWWA STANDARDS
SHOP COAT PRIMER	
1) TNEMEC L140F-1211 (3-5 MIL NOMINAL DFT)	TNEMEC COATINGS
DUCTILE IRON RESTRAINT FOR MECHANICAL JOINT	
RESTRAINED FLANGED COUPLING ADAPTER	
1) EBAA IRON MEGAFLANGE SERIES 2100	EBAA IRON
NOTE: SUPPLIED SBR RUBBER GASKET, AWWA C111	
MJ BOLT THROUGH ADAPTER	
1) FOSTER ADAPTER	INFACT CORP
NOTE: SUPPLIED SBR RUBBER GASKET, AWWA C111	
NOTE: SUPPLIED 316SSHARDWARE, AWWA C111	
MEGACOUPLINGS	
1) EBAA IRON MEGACOUPLING SERIES 3800	EBAA IRON
NOTE: SUPPLIED SBR RUBBER GASKET, AWWA C111	
NOTE: SUPPLIED 316SSHARDWARE, AWWA C111	

C&B PIPING (W), INC.

P.O. BOX 974
LEEDS, AL 35094
PHONE: (205) 699-0455
FAX: (205) 699-0773 www.cbpiping.com

DATE: 7/15/25

CONTRACTOR: NAN, INC.

PROJECT: HILO WWTP

BID DATE: 8/15/2024

AIS DOMESTIC MATERIAL

MJ RESTRAINT GLAND, WEDGE-ACTION TYPE FOR PVC PIPE X DI FTGS

1) EBAA IRON SERIES 2000PV, MEGALUG (PVC) — EBAA IRON

NOTE: SUPPLIED SBR RUBBER GASKET, AWWA C111

NOTE: SUPPLIED 316SSHARDWARE, AWWA C111

PVC PIPE RESTRAINTS

PVC BELL HARNESS RESTRAINT GLAND

1) EBAA IRON SERIES 1500, MEGALUG (PVC) — EBAA IRON

NOTE: SUPPLIED 316SSHARDWARE, AWWA C111

2) EBAA IRON SERIES 2500, MEGALUG (PVC) — EBAA IRON

NOTE: SUPPLIED 316SSHARDWARE, AWWA C111

DUCTILE IRON MID-SPAN RESTRAINT

DUCTILE IRON RESTRAINT ANCHOR POINT FOR EXISTING DIP

1) EBAA IRON SERIES 1100SDB — EBAA IRON

NOTE: SUPPLIED 316SSHARDWARE, AWWA C111

GROOVED END DUCTILE IRON PIPE ACCESSORIES

COUPLING FOR GROOVE END PIPE/FTGS

1) AWWA SERIES 31, GRV X GRV — VICTAULIC

NOTE: SUPPLIED "S" RUBBER GASKET, AWWA C111

NOTE: SUPPLIED PLATED HARDWARE, AWWA C111

2) AWWA SERIES 341, GRV X FLG ADAPTER — VICTAULIC

NOTE: SUPPLIED "S" RUBBER GASKET, AWWA C111

DUCTILE IRON PIPE X DI FITTINGS ACCESSORY SET

NON-RESTRAINED MJ ACCY SET

1) TYLER UNION C153 MECHANICAL JOINT ACCY SET — TYLER UNION

NOTE: SUPPLIED SBR RUBBER GASKET, AWWA C111

NOTE: SUPPLIED 316SS HARDWARE, AWWA C111

AMERICAN Fastite® Joint Pipe

For Water, Sewage or Other Liquids

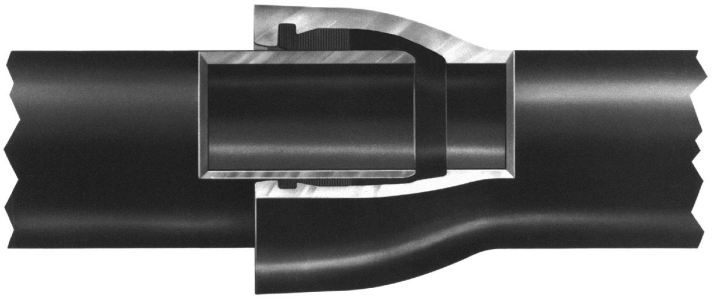

AMERICAN Fastite Joint Pipe in sizes 4"-64" for water, sewage or other liquids has the proven long-life and high-strength qualities inherent in pipe produced centrifugally in accordance with AWWA C151. In addition, this significant AMERICAN development, a dependable, single gasket, push-on type joint meeting the requirements of AWWA C111, affords the customer lower joint cost and time-saving advantages in installation. It provides exceptional strength and flexibility and has been widely accepted by engineers, contractors and utility officials since the 1950s. For added flexibility during construction, and for possible elimination of bends, a liberal 5° allowable deflection is standard in all sizes through 30", offering 21" offset in a 20' length of pipe. Liberal deflection can also be provided in larger diameter pipe with standard and Special Fastite Deflection Bells.

The patented AMERICAN Fastite Joint embodies many advanced design features and is rated for a water working pressure of 350 psi. For specific conditions, ductile iron piping with this joint has been approved for much higher pressure conditions. The socket, which is scientifically designed with two gasket recesses and a dividing buttress, is manufactured to close tolerances so that the gasket is self-centered, securely confined, and firmly compressed for a permanent, tight, trouble-free joint. The Fastite joint seal, bubble-tight under vacuum and external pressure, becomes even tighter with the application of internal pressure due to a specially designed wedging surface in the socket.

Fastite Joint Assembly

The bell opening is slightly tapered to provide easy entry of the pipe end; the flared socket design permits liberal joint deflection. The plain end of the pipe is tapered or rounded to facilitate entry into the bell and self-centering in the gasket. On pipe cut in the field, the plain end can be easily beveled and smoothed by the use of a portable grinding wheel or other suitable apparatus. Methods of cutting ductile iron pipe are described in Section 3.

A stripe is painted on the plain end of AMERICAN Fastite Joint Pipe to provide a visual means of checking the joint alignment and to assure proper insertion. See page 2-10 for detailed assembly instructions.

Fastite Gasket

The Fastite Joint sealing component—a molded synthetic rubber ring gasket of two hardnesses, shaped to fit the configuration of the gasket socket—is manufactured per all requirements of ANSI/AWWA C111/A21.11 and under AMERICAN's own rigid specifications, assuring closely controlled dimensional and hardness properties. The smaller end of the gasket is of harder rubber, approximately 85 durometer hardness, which provides a strong shoulder for self-centering on the gasket buttress, a permanent seal against cold flow, and protection from deterioration. The larger end of the gasket is of softer rubber, approximately 65 durometer hardness, providing ease of assembly and positive sealing. The design assures effective sealing at low or high pressures and in straight or deflected joint alignment. It also eliminates any concerns of infiltration or root intrusion, and assures positive sealing against negative pressure, thus preventing gasket "pullout" should a vacuum be created in the line.

A taper on the inside of the gasket allows the entering pipe to locate and center on the hard section and along with a coated and

subsequent assembly. The snug fit and the hard section of the gasket, in conjunction with the design of the buttress, act to restrain the gasket against dislodgment during assembly. Additional internal pressure results in increased tightness of the seal when pipe is either in straight alignment or deflected.

Gaskets made of SBR (Styrene Butadiene Rubber) are standard. For information on gaskets made of special types of rubber, for applications involving air or liquid temperatures in excess of 150°F, or for chemical, hydrocarbon or other special service applications, and for installations in contaminated soils where permeation through gaskets might be a concern, consult AMERICAN for recommendations. See Table 2-1.

Fastite Lubricant

AMERICAN Fastite Joint Lubricant is a non-toxic water soluble material imparting neither taste nor odor to the conveyed water and is ANSI/NSF 61 approved. The lubricant is suitable for use in hot or cold weather and will adhere to wet or dry pipe. AMERICAN Fastite Joint Pipe can be assembled when submerged, though for such installation, special AMERICAN underwater joint lubricant is recommended. See Table No. 2-5 for appropriate lubricant quantities.

Fastite Joint Materials

Standard joint materials include Fastite plain rubber gaskets and a sufficient supply of Fastite joint lubricant. Fastite pipes are most often readily joined with available excavating equipment; however, assembly tools can be supplied by AMERICAN on a loan basis with a nominal deposit which is refundable upon return of tools in good condition.

Coating and Lining

AMERICAN Fastite Joint Pipe can be furnished asphaltic coated, cement lined, or with special coating or lining where required. See Section 11.

Fastite Gaskets

Table No. 2-1

Common Name or Trade Name*	Chemical Name	Maximum Service Temperature**		Common Uses
		Water & Sewer	Air	
Plain Rubber	Styrene Butadiene Copolymer(SBR)	150°F	150°F	Fresh Water, Salt Water, Sanitary Sewage
Plain Rubber (conductive)	Styrene Butadiene Copolymer(SBR)	150°F	150°F	Electrical continuity for thawing of Service Water and Sewage
EPDM	Ethylene Propylene Diene Monomer	212°F	200°F	Water, Sewage, Ketones, Dilute Acids and Alkalies, Vegetable Oil, Alcohols, Air
Neoprene	Polychloroprene(CR)	200°F	180°F	Fresh Water, Sewage
Nitrile Buna–N	Acrylonitrile Butadiene(NBR)	150°F	150°F	Non–Aromatic Hydrocarbons, Petroleum Oil, Hydraulic Fluids, Fuel Oil, Fats, Oil, Grease†
Fluoroelastomer Fluorel Viton®***	FKM	212°F	300°F	Aromatic Hydrocarbons, Gasoline, Refined Petroleum Products, most Chemicals and Solvents, High Temp., Air (Least permeable of all available Fastite gasket rubbers)

Gaskets used with AMERICAN joints and not manufactured by an authorized AMERICAN gasket manufacturer invalidate any warranties for joints and gaskets.
*AMERICAN reserves the right to furnish any Trade or Brand rubber for the chemical formulation specified.
Temperature is in reference to conveyed fluid. **Lubricating oil in air can adversely affect SBR and EPDM performance. SBR, Nitrile and Neoprene are not recommended for hot air exposure in wastewater treatment systems.
***Viton® is a registered trademark of DuPont Dow Elastomers.
Refer to Section 11 for temperature and service capabilities of pipe linings.
Refer higher temperatures or other special requirements to AMERICAN for recommendations regarding suitable gasket material.
†This gasket rubber is chemically resistant in the non-potable water uses shown but is not as resistant to permeation in potable water applications as FKM.
All Fastite gaskets made from the materials in the above table are suitable for use with water containing normal concentrations of chloramine. Where increased resistance to chloramine is desired, neoprene or fluoroelastomer materials should be considered.

AMERICAN Fastite® Joint for Ductile Iron Pipe

ANSI/AWWA C111/A21.11

Standard Dimensions

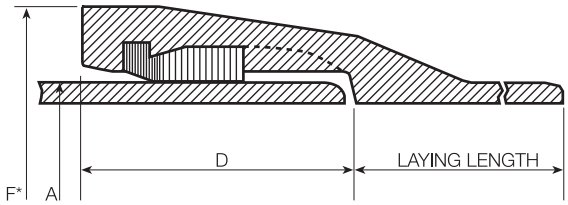

Table No. 2-2

Size in.	Nominal Laying Length ft.	Dimensions in Inches		
		A Outside Diameter	D Depth of Socket	F* Bell O.D.
4	20	4.80	3.31	6.40
6	20	6.90	3.38	8.60
8	20	9.05	3.75	10.96
10	20	11.10	3.75	13.12
12	20	13.20	3.75	15.22
14	20	15.30	5.23	17.61
16	20	17.40	5.23	19.74
18	20	19.50	5.50	22.16
20	20	21.60	5.50	24.28
24	20	25.80	5.50	28.50
30	20	32.00	6.50	34.95
36	20	38.30	6.50	41.37
42	20	44.50	7.50	48.27
48	20	50.80	8.00	54.71
54	20	57.56	8.50	61.65
60	20	61.61	8.75	65.80
64	20	65.67	9.00	70.04

*Dimensions subject to change at our option. Check AMERICAN if exact dimensions required.
See Section 3 for additional information on ductile iron pipe.
See Sections 4 and 7 for information on Fastite fittings.

AMERICAN Fastite® Joint Pipe

Allowable Joint Deflection

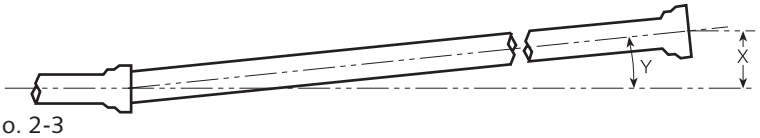

Table No. 2-3

Size in.	Nominal Laying Length ft.	Maximum Recommended Deflection†					
		Standard Bell			Special Deflection Bell		
		X Offset per Nominal Length in.	Y Deflection Angle	Radius of Curve* ft.	X Offset per Nominal Length in.	Y Deflection Angle	Radius of Curve* ft.
4	20	21	5°	230	–	–	–
6	20	21	5°	230	–	–	–
8	20	21	5°	230	–	–	–
10	20	21	5°	230	–	–	–
12	20	21	5°	230	–	–	–
14	20	21	5°	230	–	–	–
16	20	21	5°	230	–	–	–
18	20	21	5°	230	–	–	–
20	20	21	5°	230	–	–	–
24	20	21	5°	230	–	–	–
30	20	21	5°	230	–	–	–
36	20	17	4°	285	21	5°	230
42	20	12	3°	380	21	5°	230
48	20	12	3°	380	17	4°	285
54	20	12	3°	380	17	4°	285
60	20	12	3°	380	17	4°	285
64	20	12	3°	380	17	4°	285

*Approximate radius of curve produced by a succession of nominal lengths of pipe fully deflected.
†Special Deflection Bells must be specifically ordered and will be marked with white bell face for easy identification.
For easiest assembly, the joints should be assembled with the pipe in reasonably straight alignment. After joint assembly, the pipe may be deflected up to the maximum shown above. Offset distances are based on 20-ft lengths.

Maximum Allowable Separation

Table No. 2-4

Size in.	S Separation in.
4	3/8
6	9/16
8	3/4
10	15/16
12	1 1/8
14	1 5/16
16	1 1/2
18	1 5/8
20	1 7/8
24	2 1/4
30	2 3/4
36	2 5/8
42	2 1/4
48	2 1/2
54	2 7/8
60	3 1/8
64	3 3/8

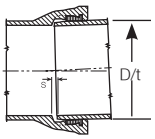

Maximum Allowable Separation, "S", in Standard Bell pipe is approximately equal to the median pipe diameter in inches times the sine of the deflection angle. This is provided for information only and should not be used to determine precise joint deflection.

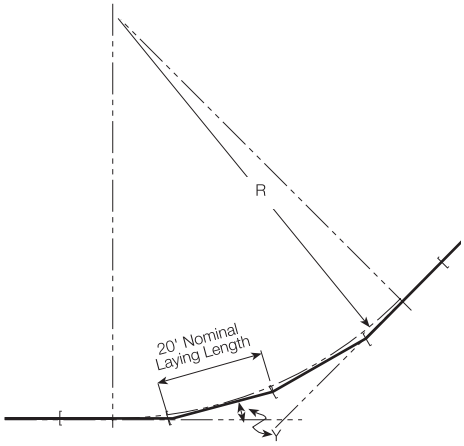

R = Radius of Curve (ft.)

Y = Deflection Angle (degrees)

$$\text{Radius of Curve} = \frac{\text{Nominal Laying Length}}{2 \times \text{Tangent } (Y \div 2)}$$

AMERICAN Fastite® Joint Pipe Assembly Instructions

The AMERICAN Fastite Joint is a push-on type joint meeting all the rigorous requirements of AWWA C111. The ANSI/AWWA C600 Standard covers in detail the installation of ductile iron water mains, including assembly instructions for push-on joint pipe.

Field-cutting of AMERICAN Ductile Iron Pipe can be easily performed, thus eliminating the necessity for factory-made special lengths of Fastite pipe. The plain end of Fastite pipe cut in the field requires little or no preparation for assembly into the socket of a mechanical joint fitting. Where a cut pipe is to be assembled into a Fastite socket, the required beveling or rounding of the plain end can be easily accomplished by the use of a portable grinding wheel or other suitable apparatus. Methods of cutting ductile iron pipe are described in Section 3.

The AMERICAN Fastite Joint requires only one joint component, the rubber gasket*, which when properly installed, fits snugly in the gasket recess in the bell socket. A special lubricant supplied with the pipe is applied to the plain end and the inside surface of the gasket before assembly. The pipe end is tapered or rounded to provide self-centering of the plain end in the gasket and ease of assembly. A circumferential stripe on the plain end provides a visual indication for checking the proper insertion of the joint. The stripe, shown in the photographs illustrating assembly methods, passes fully into the bell when the plain end is fully inserted into the socket with the two lengths of pipe in straight alignment. Joints can then be safely deflected up to the extent shown in Table No. 2-3. In deflected joints, the stripe will typically be visible to some extent after assembly.

Easier assembly is effected if the pipe is suspended an inch or so off the bottom of the trench during the jointing operation.

The following instructions should be followed in order to properly assemble the joints and to fully realize the maximum speed and ease of assembly of the Fastite Joint:

1. Clean socket and plain end thoroughly, **removing** mud, gravel, or **any** other **matter that might cause the front of the gasket to protrude into the path of the entering spigot.**

2. Insert gasket fully into the gasket recess of the socket, large end of the gasket entering first. Gasket may be installed with one or two V-shaped folds as shown (Photo 1). After the gasket is in place at the bottom, the top of the gasket is positioned fully into the gasket recess. Gaskets and lubricant to be installed in very cold weather should be warmed first (as by storage in a heated equipment cab or pick-up, etc.) for optimum assembly.

3. Apply a thin film of regular AMERICAN Fastite Joint Lubricant to the rounded or tapered spigot end of the pipe, the immediate outside pipe surface between the stripe and the nose of the pipe (Photo 2), and also to the inside surface of the gasket. **Special AMERICAN Fastite Joint Lubricant intended specifically for underwater or very wet installations can be supplied when requested.**

Photo 1

Photo 2

*Gaskets not used immediately should be stored in a cool location, out of direct sunlight.

Caution: If a spigot end contacts the ground or trench side after lubrication, any adhering dirt or rocks should be cleaned off and the area re-lubricated prior to assembly.

4. Insert the plain end in the socket. For optimum assembly it is preferable that the entering pipe be in reasonably straight alignment; however, the Fastite Joint may be assembled if necessary with the pipe deflected within its rated deflection. (Exception: If Fast-Grip gaskets are being used, straight alignment must be maintained.) Push the plain end into the socket using any of the applicable assembly methods described hereinafter. If the joint cannot be assembled with a moderate force, remove the pipe and check for the cause of the difficulty, such as improper positioning of gasket, insufficient or wrong type lubricant, dirt under or behind the gasket, dirt adhering to the pipe, or any other cause which would result in obstruction or increased friction between pipe end and gasket surface. **For assurance of proper assembly, a thin automotive, blade-type feeler gauge can also be used if desired for quick and easy probe confirmation of correctly installed axial gasket position around the joint.**

5. "Backwards" installation. AMERICAN does not recommend "backward laying" (bells assembled over spigots, rather than spigots inserted into bells as pictured in this literature) of large-diameter ductile iron pipe in buried installations. AMERICAN can furnish bell and plain end fittings to minimize the need for backward pipe laying. Other devices such as sleeves and couplings may also be employed for this reason. However, if this condition cannot be avoided, we strongly recommend that installers contact AMERICAN for instructions on how to reduce the potential for problems that could occur when assembling pipe in this manner.

AMERICAN Pipe Assembly Mechanisms

In general, Fastite joints or other Fastite gasketed pipes may be readily pushed or pulled together without the need for complicated tools or substantial manpower. This is most often accomplished with the procedures discussed on page 2-14. In general, the joints of AMERICAN push-on pipes are purposefully "tight," and most joints require an assembly force of about 100 to 200 pounds or more of assembly force per inch of pipe diameter (i.e. a 12" joint might require about 12 x 100 or 1,200 pounds of assembly force).

In pulling operations, simply wrap a sound wire rope choker cable or nylon sling around the barrel of the entering pipe. Secure the thimble eye or other end loop of the choker to a suitably anchored pulling device (e.g. backhoe, come-along, etc.). Use the mechanism to pull the cable taut in the assembly direction (Photo 3). Continue pulling the cable in a smooth, continuous motion until the joint is in the fully assembled position. If desired for special conditions, AMERICAN can furnish suitable, simple come-alongs and choker cables for manpower assembly of

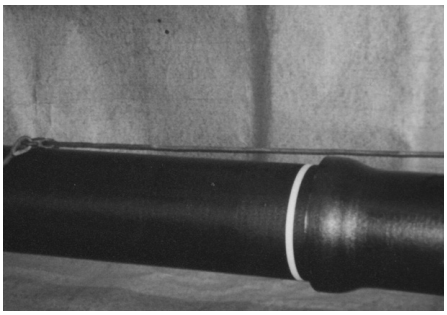

Photo 3

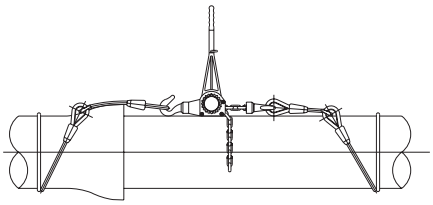

Figure 1

most **4"-24"** pipes (See Figure 1 and specify pipe sizes involved).

The joints may normally be disassembled in a similar manner, reversing the direction of the pull with the choker cable (Photo 4). It is also sometimes helpful to use rebating or wiggling deflection to aid in the disassembly of push-on joint pipes, particularly when pipes have been installed for some time prior to removal.

30"-64" Pipe

Photo 4

Large pipes are most often readily pushed or pulled together with heavy excavating/earthmoving equipment available on-site (see page 2-14). In cases where assembly of pipes by manpower is desired, AMERICAN can provide special assembly tools and rigging which can be used for assembling most pipes of all sizes (Photo 5). These tools consist of a heavy-duty roller chain hoist, a steel pipe-end hook and snatch block, and associated wire rope and chain tackle (Photo 5) to attach all the rigging together to effect "double line" assembly from the top of the pipe (Photo 6). The snatch block pulley and twin line rigging approximately doubles the assembly force from the strong come-along, making possible the assembly of up to 64" full-length pipe joints from the top of the pipe (Photo 7).

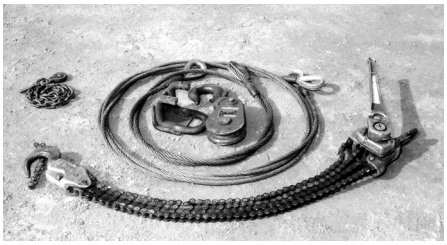

Photo 5

Photo 6

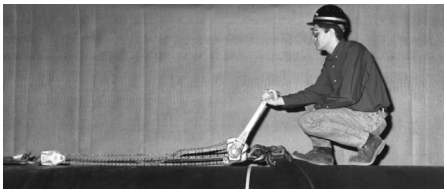

Photo 7

Fittings and Short Pipes

Push-on fitting or short pipe joint assembly is basically the same as that of standard length pipe, though special rigging may be necessary to hold these short items reasonably stable for assembly. See also Push-On Fittings Assembly Instructions in Section 4.

Field Rounding

Occasionally, field rounding of pipe ends may be necessary to accomplish assembly, particularly when large-diameter pipes are cut to be assembled into mechanical joints or couplings. Need for rounding in assembly of mechanical or stuffing-box-type joints can be predetermined by a difficulty in sliding the gland or end ring over the end of the pipe. Rounding may be accomplished in the following manner using a mechanical jack and shaped blocks. (Note: This procedure may also be used with the assemblies involving push-on joint pipe, fittings, valves, etc.; however, rounding is less frequently necessary for assembly of push-on joints.)

1. Measure/determine the minimum (minor) diameter of the ends to be rounded.

2. Place the jack and the shaped blocks in line with the minor diameter as shown in the attached sketch using a sound 4"x4" spacer timber cut square to the required length to take up the space.

3. Apply a load carefully with the jack only until the "minimum diameter equals the maximum diameter," or until the gland will easily slip over the end. No more jacking should be attempted or necessary - **DO NOT ATTEMPT TO PERMANENTLY ROUND END.**

4. When no mechanical joint restraint device is used, carefully relax and remove the jack and timbers from the pipe after joint assembly.

5. When using a mechanical joint restraint device not manufactured by AMERICAN, contact the applicable manufacturer of the restraint device regarding installation guidelines.

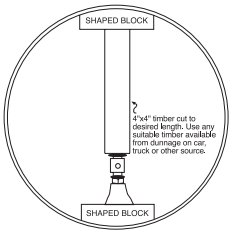

Note: Field rounding operations should be conducted without backfill on any part of large-diameter pipes and prior to encasing any part of pipe in concrete. If the inside of the pipe cannot be accessed to remove jacking materials, pipe ends can alternatively be rounded using external clamping means.

AMERICAN Fastite® Joint Lubricant Requirement by Size of Pipe

64" AMERICAN Fastite Joint pipe being installed in a wastewater application.

Table No. 2-5

Pipe Size in.	Approx. Pounds of Lubricant per Joint	Approx. No. of Joints per Pound of Lubricant
4	.03	33
6	.045	22
8	.06	17
10	.07	14
12	.08	12
14	.09	11
16	.11	9
18	.12	8
20	.14	7
24	.17	6
30	.30	3
36	.36	3
42	.44	2
48	.50	2
54	.59	2
60	.66	1
64	.71	1

AMERICAN Fastite® Joint
Common Assembly Methods

In seeking ways to take even greater advantage of the cost-reducing features of the Fastite Joint, utility contractors have developed other methods of assembling this joint without special tools. The following methods are described for the information of the user, who may elect to use them at his discretion, keeping in mind that these methods may not be effective for all installations and under all field conditions.

Spade or Crowbar Method

This is applicable to the smaller sizes of AMERICAN Fastite Joint Pipe, and consists of centering the lubricated end of the entering pipe in the gasket and then pushing against the bell face of the entering pipe with a spade or crowbar driven into the ground in front of the bell face. This method requires the trench bottom to be fairly firm soil. The method may not be effective in a rocky trench or with a trench that is soft, muddy or sandy. A wooden block between the bell face and the pry bar may increase the leverage. Easier assembly is effected if the pipe is suspended an inch or so off the bottom of the trench.

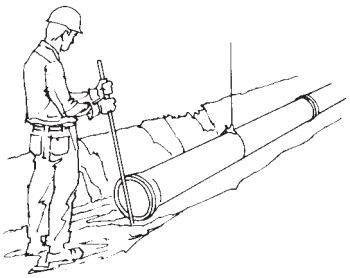

Spade or Crowbar Method

Backhoe and Heavy Equipment Methods

These methods are usually applicable to the intermediate and larger sizes of AMERICAN Fastite Joint Pipe where the bar method might not be effective. It consists of centering the end of the entering pipe in the gasket as the pipe to be assembled is suspended from the backhoe. Then it can be pulled into the adjoining socket with the pipe sling by moving the backhoe arm toward the previously assembled pipe. In other instances, the pipe may be assembled by placing the backhoe or other earth mover bucket or blade against the bell face of the entering pipe and pushing it into the socket. When pushing against the bell face, care should be taken to avoid very small contact areas and possible damage to the pipe bells or spigots. Wood cushions between the backhoe bucket and the pipe are particularly effective in preventing damage.

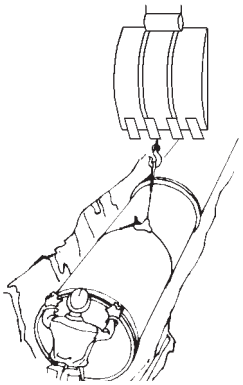

Backhoe and Heavy Equipment Methods

AMERICAN Ductile Iron Flex-Ring® Joint Pipe

Centrifugally Cast for Water, Sewage, or Other Liquids

4"-12" Flex-Ring® Joint

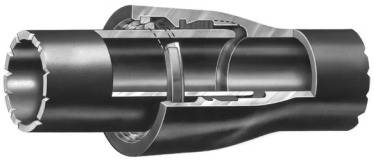

14"-60" Flex-Ring® Joint

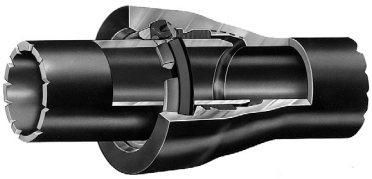

AMERICAN Flex-Ring® Restrained Joint Ductile Iron pipe, utilizing the sealing features of the time-proven Fastite® Joint and a boltless restrained connection, provides flexible, easily assembled, positive restraint against endwise separation due to thrust.

The patented Flex-Ring Joint is designed for a working pressure equal to that of the pipe or up to 350 psi in sizes 4"-24" and up to 250 psi in sizes 30" through 60". The joint has been thoroughly factory tested to withstand dead-end thrust resulting from more than twice those working pressures.

Flex-Ring® joint pipe with its positive, flexible joint restraint may also be used in trenchless applications such as **horizontal directional drilling** and pipe bursting. With spigot ahead, the low-profile Flex-Ring® bell assembles quickly and offers a smooth transition during pipe pull-back. AMERICAN offers a Flex-Ring® pulling bell assembly specifically designed for this installation method.

Pulling Bell Assembly

For 4"-12" sizes, a beveled ductile iron, welded-on retainer ring and a yellow painted ductile iron split flex-ring, assembled behind the retainer ring, provide the means of restraint. After the plain end of the pipe is assembled into the Flex-Ring bell, the split flex-ring is inserted and springs into the socket locking groove. The flex-ring is securely positioned behind the welded-on retainer ring and in the socket locking groove on the inside of the pipe bell. This provides the flexible restraint.

For 14"-60" sizes, a shop-applied weld bead and a rubber-backed ring, containing yellow painted ductile iron segments, provide the means of restraint. As the plain end of the pipe is fully assembled into the bell, the ductile iron segments automatically close on the pipe behind the weld bead. The enclosure of the segments between the weld bead, spigot, and the sloped inner lip of the bell provides the flexible restraint.

The Flex-Ring Joint can be safely deflected after assembly to the limits shown in Table Nos. 9-1 and 9-2. This liberal deflection facilitates installation, decreases the number of necessary fittings, and accommodates settlement.

The Flex-Ring Joint is Underwriters Laboratories listed and Factory Mutual approved in sizes 4"-12". This UL listing and FM approval applies to all pressure classes and special thickness classes of ductile iron pipe. The only joint components needed to assemble the Flex-Ring Joint are a gasket and a single ring.

AMERICAN Ductile Iron Flex-Ring® Joint Pipe

Centrifugally Cast for Water, Sewage, or Other Liquids

No loose lugs, heavy wedges, rubber tubes, etc. are necessary. Also, there is no need to orient bells to ensure proper installation, though for convenience, most installers orient the split locking ring ends in 4"-12" sizes away from the very bottom of the joints. Just follow the simple instructions shown on the following pages, and positive restraint is ensured.

Flex-Rings, Flex-Ring segments, and retainer rings are manufactured of ductile iron compatible with pipe. Welds and weld beads (if used) are nickel-iron, proven desirably cathodic to the ductile iron pipe, and welding is performed using welders qualified to produce high-quality, dependable welds.

Fittings for use with 16"- 48" Flex-Ring pipe are ductile iron and meet or exceed the applicable performance and manufacturing requirements of ANSI /AWWA C110/A21.10 or ANSI/AWWA C153/A21.53. These are rated for the same working pressures shown for like fittings in C110 and C153. Fittings in these sizes are also available in both bell-bell and bell-Flex-Ring spigot configurations for installation versatility and economy.

AMERICAN Flex-Ring® pipe and fittings are normally furnished with standard asphaltic coating outside and cement lined in accordance with ANSI/AWWA C104/A21.4. Special coatings and linings can be furnished when specified.

Field closures or other restraint can normally be securely made by using AMERICAN's Amarillo Fast-Grip® gasket, which is available in 4"-30" sizes. (See page 9-2 for details of the Amarillo Fast-Grip gasket.)The Fast-Grip® gasket restraint closure is UL listed and FM approved for use in Flex-Ring and Fastite bells in 4"-16" sizes. Field closures or other restraint in 14"-36" sizes can also be made in Flex-Ring bells only by using AMERICAN's Field Flex-Ring®. (See page 9-23.)

AMERICAN Ductile Iron Flex-Ring® Joint Pipe

Standard Dimensions and Pressure Ratings

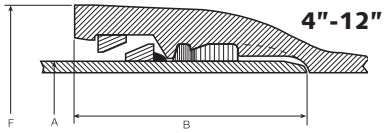

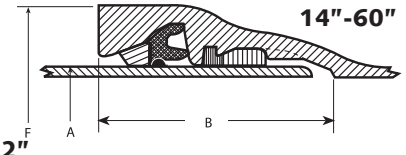

Table No. 9-1 **4"-12"**

Size in.	Working Pressure* psi	Nominal Laying Length** ft.	A O.D. in.	B Socket Depth in.	F Bell O.D.† in.	Allowable Pulling Load lb.††	Allowable Deflection degree	Offset per 20' Length in.	Radius of Curve^ ft.	Empty Pipe Buoyancy in Water (lb/ft)^^
4	350	20	4.80	5.62	7.06	10,000	5	21	230	–5
6	350	20	6.90	5.62	9.19	20,000	5	21	230	–2
8	350	20	9.05	5.74	11.33	30,000	5	21	230	3
10	350	20	11.10	6.72	13.56	45,000	5	21	230	11
12	350	20	13.20	6.72	15.74	60,000	5	21	230	19

* Working pressure is the maximum pressure rating of the joint and is based on its capability to resist thrust due to internal pressure. If higher working pressure is required, check AMERICAN.

** Laying length is nominal 20'. Where exact lengths are required, contact AMERICAN. Minimum laying lengths for Flex–Ring & Flex–Ring End pipe is 1'–0" and for Flex–Ring End & Flex–Ring End pipe is 2'–0".

† Dimensions subject to change at our option. Check AMERICAN if smaller or exact dimensions are required.

†† Intended for Horizontal Directional Drilling (HDD) applications, so these pulling loads are for a fully deflected position. Flex–Ring pipe may be available for greater pulling loads than indicated in the tabulated values. **Contact AMERICAN when higher pulling loads are required.**

^ Approximate radius of curve produced by a succession of 20' lengths of pipe fully deflected.

^^ Based on weight of empty (full of air) Pressure Class 350 Flex–Ring pipe with standard cement lining immersed in water. Positive numbers indicate such pipe will float.

Table No. 9-2 **14"-60"**

Size in.	Working Pressure* psi	Nominal Laying Length** ft.	A O.D. in.	B Socket Depth in.	F Bell O.D.† in.	Allowable Pulling Load lb.††	Allowable Deflection degree	Offset per 20' Length in.	Radius of Curve^ ft.	Empty Pipe Buoyancy in Water (lb/ft)^^
14	350	20	15.30	7.38	19.31	75,000	4	17	285	27
16	350	20	17.40	7.38	21.08	95,000	3 3/4	16	305	38
18	350	20	19.50	8.20	23.70	120,000	3 3/4	16	305	52
20	350	20	21.60	8.20	25.37	150,000	3 1/2	15	327	69
24	350	20	25.80	8.96	29.88	210,000	3	12	380	104
30	250	20	32.00	9.63	36.34	220,000	2 1/2	10	458	175
36	250	20	38.30	9.63	43.10	310,000	2	8	570	266
42	250	20	44.50	10.84	49.92	390,000	2	8	570	359
48	250	20	50.80	12.37	56.36	500,000	2	8	570	484
54	250	20	57.56	12.74	63.90	650,000	1 1/2	6	760	632
60	250	20	61.61	13.13	68.16	745,000	1 1/2	6	760	781

* Working pressure is the maximum pressure rating of the joint and is based on its capability to resist thrust due to internal pressure. If higher working pressure is required, check AMERICAN. Pressure rating of the joint is limited by the pressure rating of the parent pipe.

** Laying length is nominal 20'. Where exact lengths are required, contact AMERICAN. See below for minimum laying lengths for 14"–60" Flex–Ring.

† Dimensions subject to change at our option. Check AMERICAN if smaller or exact dimensions are required.

†† Intended for Horizontal Directional Drilling (HDD) applications, so these pulling loads are for a fully deflected position. The tabulated values are based on Pressure Class 350 pipe thickness. **Contact AMERICAN when it may be desirable to use lesser pressure class pipe or when higher pulling loads are required.** Flex–Ring pipe may be available for greater pulling loads than indicated in the tabulated values.

^ Approximate radius of curve produced by a succession of 20' lengths of pipe fully deflected.

^^ Based on weight of empty (full of air) Pressure Class 350 Flex–Ring pipe with standard cement lining immersed in water. Positive numbers indicate such pipe will float.

Minimum Laying Lengths

Size in.	Flex-Ring & Flex-Ring End	Flex-Ring End & Flex-Ring End
14	1'–6"	2'–0"
16	1'–6"	2'–0"
18	1'–6"	2'–0"
20	1'–6"	2'–0"
24	2'–0"	2'–6"
30	2'–0"	2'–6"
36	2'–0"	2'–6"
42	2'–0"	3'–0"
48	2'–6"	3'–0"
54	3'–0"	3'–6"
60	3'–6"	4'–0"

AMERICAN Ductile Iron Flex-Ring® Joint Pipe

Assembly Instructions

4"-12"

1

2

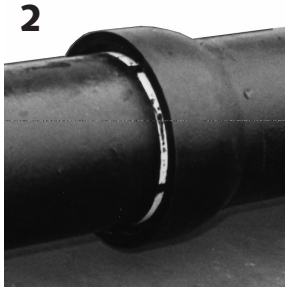

Prior to joint assembly, remove the packing material holding the split flex-ring onto the pipe. (See "Field Assembly of Flex-Ring" if split flex-ring is shipped separately.) Thoroughly clean the socket locking groove as well as the Fastite gasket recess and pipe plain end. In accordance with standard Fastite joint assembly instructions, insert the gasket and lubricate the pipe plain end, bevel, and inside surface of the gasket. With the pipe in essentially straight alignment, assemble the plain end into the Flex-Ring socket until the spigot stripe disappears into the bell. The orientation of the spigot stripe relative to the bell face is an indication of pipe alignment.

1. Tap the flex-ring into the socket beginning with one end of the flex-ring and progressing around the joint as shown in Photo 1. This operation is made easier by holding one end of the flex-ring inside the bell as the remainder of the ring is caulked into the socket. Correct seating is generally ensured by a snapping noise as the flex-ring springs into position. This should be accompanied by visual or tactile inspection (the flex-ring is painted yellow to aid in this inspection). (Note: When a visual inspection to determine the flex-ring position is not practical, such as in an underwater installation, a feeler gauge can be used to ensure the correct positioning of the flex-ring in the socket locking groove. It may be necessary to move the entering pipe slightly to improve alignment if the ring does not readily spring into the socket locking groove.)

2. The completed joint.

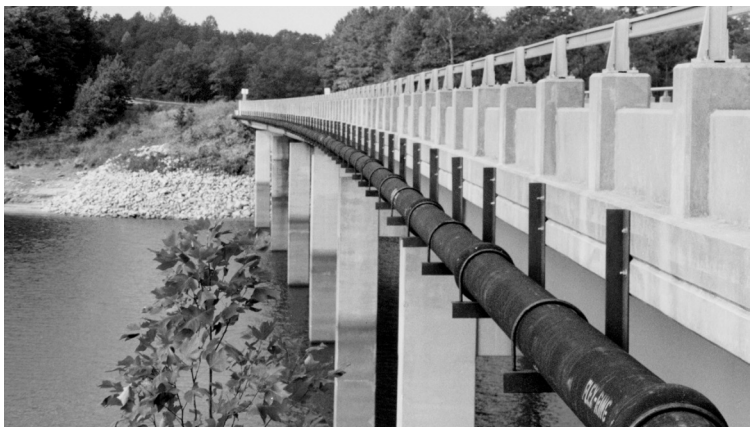

This bridge crossing illustrates design/construction advantages, including the deflection capabilities of AMERICAN Flex-Ring Joint Pipe.

AMERICAN Ductile Iron Flex-Ring® Joint Pipe

Assembly Instructions

4"-12"

FIELD ASSEMBLY OF FLEX-RING

If the split flex-ring is shipped separately, assemble it onto the pipe spigot by spreading the Flex-Ring ends as shown above. Be sure that the flex-ring is oriented so that the small end is toward the pipe plain end.

DISASSEMBLY OF 4"-12" FLEX-RING

If disassembly of the joint is required, it may be accomplished by inserting pins or nails into the drilled holes furnished in the flex-ring ends and compressing the flex-ring firmly onto the pipe as shown above. If desired, steel pins can be field welded onto the ends of common adjustable pliers, if such a disassembly tool is more desirable to the user. If axial movement or joint extension has occurred in the joint prior to disassembly, it may be necessary to move the spigot completely to the rear of the socket in straight alignment to allow the Flex-Ring to be compressed for removal.

THE FOLLOWING INFORMATION PERTAINS TO 4"-60" JOINTS:

NOTE: The AMERICAN Flex-Ring Joint allows for joint take-up and flexibility after installation. In most underground installations, including most restrained bend locations, this feature is advantageous in that increased thrust-resisting soil forces are generated. Also, expansion and contraction due to temperature variations may be accommodated without excessive stress in the pipe members.

In any application where axial or lateral movement may be undesirable, such as certain bridge crossings, certain exposed or unburied piping applications, or certain connections of restrained pipe sections to rigid piping, special provisions, including effective joint extension, may be necessary to control unacceptable pipeline movement. (See also Section 7, Pipe-On-Supports, etc.)

Depending on job conditions and restrained pipe length, cumulative joint take-up can be substantial, particularly in exposed or unburied piping applications. In this regard, joints may be extended after assembly to minimize further joint take-up in test or service. This will not prevent proper joint deflection.

The amount of joint take-up or line movement in buried restrained pipelines is substantially limited by the surrounding soil. Therefore, system security and safety is maximized by filling and testing restrained sections of pipelines after backfilling as recommended by ANSI/AWWA C600, Installation of Ductile Iron Water Mains and Their Appurtenances and AWWA M41.

AMERICAN Ductile Iron Flex-Ring® Joint Pipe

Assembly Instructions
14"-60"

1) Cleaning and Fastite gasket insertion

Thoroughly clean the socket restraining groove (nearest the bell end), the Fastite gasket recess, and the pipe plain end, removing dirt, sand, ice, mud, or any other material which could prevent the proper placement of the Fastite gasket and flex-ring. As in normal Fastite joint assembly, insert the gasket into the gasket socket groove.**(1). Important: A Fastite gasket must also be used, because the rubber backed flex-ring does not perform any sealing function.**

Photo 1

Photo 2

Photo 3

Photo 4

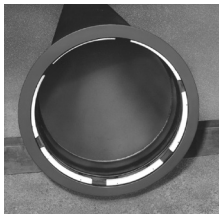

2) Placement of the the flex-ring in socket and joint lubrication

Remove the flex-ring from its container and place it in the socket restraining groove in gasket-like fashion (Photo 2). **The yellow** restraining segments of the flex–ring must be oriented toward the entering spigot. This may be done by first placing the flex-ring in the socket groove by forming one or more inward or lateral loops in the rubber backed ring (Photo 3). The 48-inch, 54-inch, and 60-inch diameter rubber backed flex-ring has an area with an extended rubber section. When placing the 48-inch, 54-inch, and 60-inch rubber backed flex-ring into the socket, this extended rubber section should be oriented at the top of the joint.

Work all inward or lateral loops fully outward and planar such that each metal segment fits reasonably flush against the wedging surface of the socket, and no rubber bulges or twists remain (Photo 4).

Lubricate the inside surface of the gasket and the first four inches of the spigot including the beveled nose end of the pipe. It is not necessary to lubricate the rubber backed flex-ring or the yellow segments. Do not allow the lubricated spigot end of the pipe to contact the ground prior to insertion.

3) Initial placement of Flex-Ring spigot end into socket

With the spigot in reasonably straight alignment and centered within the flex–ring (Photo 5), insert the spigot until it contacts the back of the socket per normal Fastite joint assembly procedure. (See Section 2 for additional detail on Fastite assembly procedures.) When the weld bead is in proper assembled position fully beyond the yellow Flex–Ring segments, every segment will be trapped firmly between the weld bead, the spigot, and the wedging surface of the socket.

Photo 5

Verify the correct positioning of the yellow Flex-Ring segments by visual inspection (or by "feeler" gauge if installed in conditions of poor visibility).

The segments will normally snap directly into the correct assembled position. However, if any segment should not come down firmly onto the pipe at any location, deflect the pipe slightly in that direction, thereby allowing the segment to seat itself correctly.

After joint assembly, the joint may be extended and then deflected within the range of allowable joint deflection for the size of pipe being assembled.

4) Assembly of fittings

Flex-Ring pipe and fitting joints can generally be assembled with the same tools and methods used for many years with Fastite joints. When using a field-cut pipe to locate a fitting, it may be advantageous to use an uncut flex-ring spigot end (with factory weld bead) and a standard Flex-Ring in the fitting socket rather than using a field-cut plain end and Field Flex-Ring with

AMERICAN Ductile Iron Flex-Ring® Joint Pipe

Assembly Instructions
14"-60"

black-toothed gripping segments. A Field Flex-Ring and cut pipe plain end may then be used in the nearest pipe socket on either side of the fitting. When possible, the use of standard flex–ring with yellow segments and factory spigots with weld beads in the sockets of a fitting may allow easier orientation or rotation of the fitting relative to the pipe after assembly, if this is needed. (See Section 4 for additional detail on the assembly of Fastite fittings.)

5) Joint extension after installation

The 14"- 60" Flex-Ring locking mechanism allows approximately one inch of free axial movement and also provides substantial flexibility after installation. However, the joints may be extended after assembly to minimize this joint takeup in test or service conditions.

In most underground installations (including most restrained bend locations), joint take-up is advantageous in that increased thrust-resisting forces are generated. Also, expansion and contraction due to temperature variations may be accommodated without excessive stress in pipe members. The amount of joint take-up or line movement in buried restrained pipelines is substantially limited by the surrounding soil. Therefore, system security and safety is maximized by filling and testing restrained sections of pipelines **after** backfilling as recommended by ANSI/AWWA C600, Installation of Ductile Iron Water Mains and Their Appurtenances and AWWA M41.

In any application where axial or lateral movement may be undesirable, such as certain bridge crossings, certain exposed or unburied piping applications, or certain connections of restrained pipe sections to rigid piping, special provisions, including effective joint extension, may be necessary to control unacceptable pipeline movement.

Depending on job conditions and restrained pipe length, cumulative joint take-up can obviously be substantial, particularly in exposed piping applications. Where joint pre-extension is necessary in a piping system, it may be accomplished by pulling or jacking the spigot away from the socket until firm resistance is encountered. This will not limit joint flexibility. See "Restrained Joint Pipe Assembly Extension Procedure" in this section of the Pipe Manual for more information concerning joint extension.

The versatile performance capabilities of AMERICAN Flex-Ring Joint Pipe are perfectly suited for projects containing a variety of conditions such as the hilly, rocky terrain shown in this photo.

AMERICAN Ductile Iron Flex-Ring® Joint Pipe

Disassembly Instructions for 14"-60" Flex-Ring Joints

Flex-Ring joints may be disassembled if required using sharp wedges and 3/16"-1/4" thick disassembly shims. Flex-Ring disassembly sets are available from AMERICAN and are suggested for disassembly. These disassembly sets include two sharp steel starter wedges and an appropriate number of "L"- shaped shims. The wedges are used to start the separation of the yellow Flex-Ring joint locking segments outward from the spigot while it is in the bell of an already assembled joint. The "L"-shaped shims are then hammered between the spigot and each locking segment. The thicker shims lift the locking segments entirely away from the spigot when fully inserted, and allow the spigot weld bead to pass under the locking segments generally located as shown in Figs. 1 and 2. Step-by-step instructions follow:

1. First straighten the joint as much as possible and push or pull the spigot back into the bell until it "bottoms out" in the rear of the socket. (Fig. 3)

2. Hammer a starter wedge under a yellow locking segment until an approximately 1/8" gap is seen between the segment and the spigot. (Fig. 4)

3. Hammer a second wedge (if necessary to start the shims) under the other end of the locking segment as in step 2.

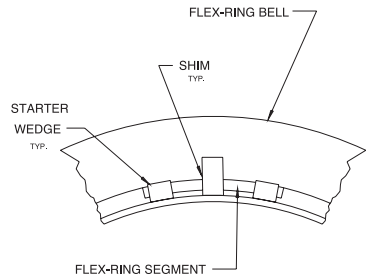

Figure 1
Starter shim and wedge arrangement for 14", 18", and 20" sizes.

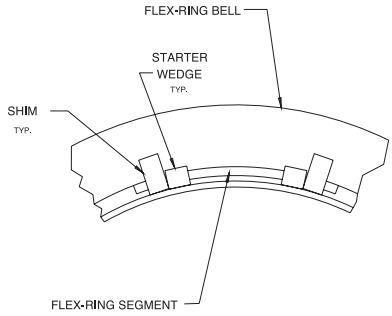

Figure 2
Shim and wedge arrangement for 16", 24", 30", 42", 48", 54" and 60" sizes.

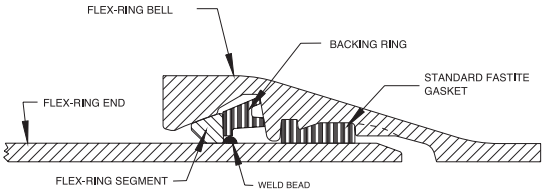

Figure 3

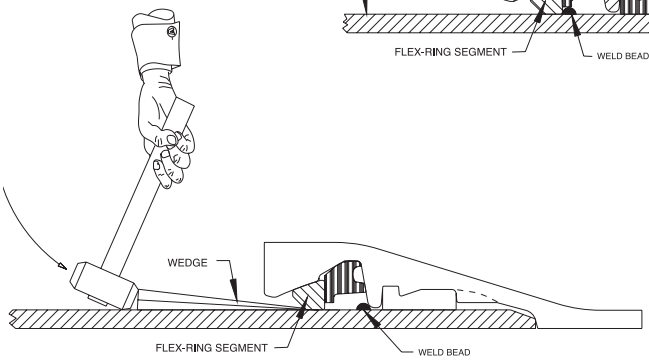

Figure 4

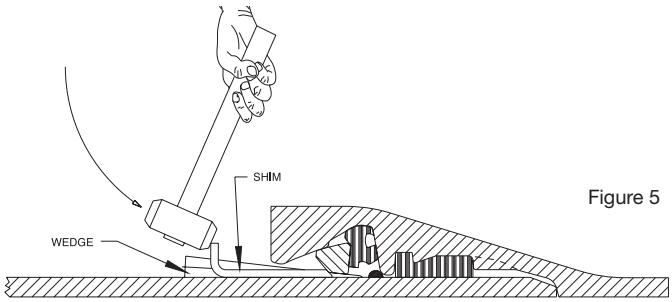

Figure 5

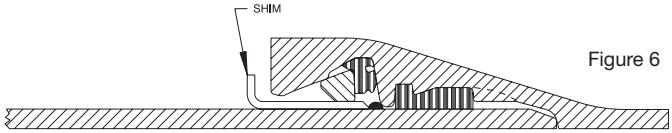

Figure 6

4. With a large hammer (such as a six pounder) vigorously drive one or two "L"-shaped shims under the locking segment until the ends of the shims firmly contact the spigot weld bead. (Fig. 5) Shims and wedges can be safely and firmly held against the pipe as they are hammered using a block of wood or a board. Safety precautions such as the wearing of safety glasses and keeping clear of the hammer during striking should always be taken to avoid injury.

5. Remove the starter wedges from between the locking segment and spigot, leaving the shim(s) in place. (Fig. 6) Note that the wedges are reused for each locking segment.

6. Drive wedges and shims under all locking segments as shown in steps 2-5. (See photo.) Check to be sure that the inner surface of all segments will not interfere with the spigot weld bead during joint separation after inserting shims.

7. Separate the joint. During joint separation, it is generally best to pull the spigot straight out of the socket. Extreme back and forth deflecting motions of the spigot during joint separation can cause shims to fall out of the joint and/or relocking to occur. If the joint does not readily come apart, check to see if one or more of the segments is in locking contact with the spigot weld bead. If so, push or deflect the spigot back in that location and add or replace shims as required.

Disassembly kits accompanied by instructions for use can be furnished by AMERICAN upon request.

AMERICAN Ductile Iron MJ Coupled Joint Pipe

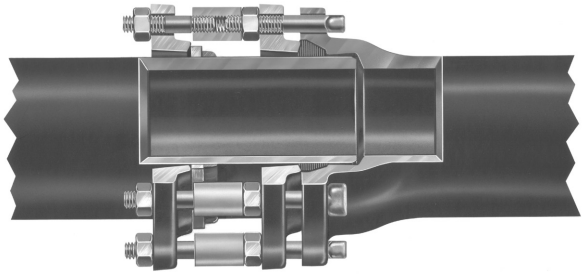

The MJ Coupled Joint offers a method of providing joint restraint with a standard Mechanical Joint socket of a pipe, fitting, valve, or other product. It is available in sizes 4″-12″ with a pressure rating of 350 psi and deflection capability up to 2 1/2°, and in 14″-54″ with a pressure rating of 250 psi intended for installation in essentially straight alignment. Check AMERICAN if larger sizes or greater deflections are desired. The MJ Coupled Joint is commonly used as a method of joint restraint for Mechanical Joint all bell fittings and valves.

The joint material consists of a standard MJ gasket and a standard ductile iron joint gland. The restraint gland* is ductile iron and is assembled on the pipe behind a welded-on 1/2″ square alloy steel retaining ring. Coupling nuts, studs, teehead bolts and nuts, and retaining ring are all alloy steel. Teehead bolts are special-length bolts.

* The restraint gland for 30″–54″ sizes is a substantially rectangular cross–section ductile iron gland.

Note: It is sometimes possible to provide for field–cutting and positive, even "drop–in" field–adaptable restraint in restrained piping areas by using modified MJ Coupled joints where the weld ring and restraint gland are intentionally moved farther away from the joint, and the standard short studs of the joint are replaced by longer threaded rods in the field. Threaded rods, of course, can also be cut to suit in the field. Similar effect can also be accomplished utilizing standard fabricated, stuffing–box couplings and similarly modified "Coupling Gland Ends" (see pg 9–42). Contact AMERICAN for additional information on this.

Assembly Instructions

1. Assemble the Mechanical Joint according to standard MJ joint procedures with the pipe and/or fitting in essentially straight alignment. Note that the bolts for this joint are not standard length; special-length bolts are furnished for this joint by AMERICAN. Where tapped holes are encountered in fittings or in valves, use studs of the same special length as specified for the THHN Bolts.

2. Thread the coupling nuts onto the tee-head bolts and hand tighten against the hex nuts.** Install short, threaded end of studs into the coupling nuts.

3. Slide the gland into position and install outer hex nuts. (Note: If deflection is desired, it should be taken at this point prior to tightening the outer hex nuts.) Tighten to 20 ft-lb in order to draw gland substantially against welded-on ring on pipe. Joint is now complete.

** In 20" and 24" sizes only, the coupling nut is to be positioned not against the hex nut, but rather so that there is a minimum of 3/4" thread engagement with both the tee–head as well as stud threads.

AMERICAN Ductile Iron MJ Coupled Joint

Dimensions

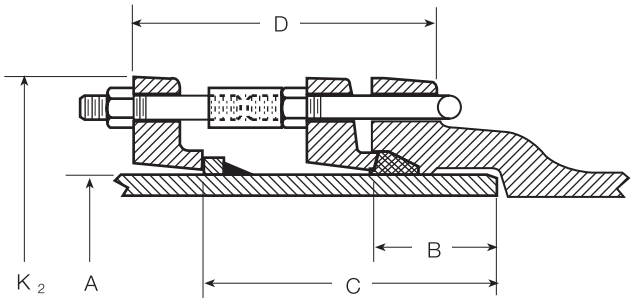

Table No. 9-13 **4"-24"**

Size in.	A Outside Diameter in.	B Socket Depth in.	C Plain End to Gland in.	K2 Gland O.D. in.	Bolts or Studs No.	Tee-Head Bolt in.	Stud in.	MJCJE & MJCJE Minimum Laying Length (ft.)
4	4.80	2.50	6.34	9.12	4	3/4 x 4	3/4 x 3 1/2	2'–3"
6	6.90	2.50	6.50	11.12	6	3/4 x 4	3/4 x 3 1/2	2'–3"
8	9.05	2.50	6.64	13.37	6	3/4 x 4 1/2	3/4 x 3 1/2	2'–3"
10	11.10	2.50	6.71	15.69	8	3/4 x 4 1/2	3/4 x 3 1/2	2'–3"
12	13.20	2.50	6.77	17.94	8	3/4 x 4 1/2	3/4 x 3 1/2	2'–3
14	15.30	3.50	8.88	20.31	10	3/4 x 5	3/4 x 5	2'–9"
16	17.40	3.50	8.88	22.56	12	3/4 x 5	3/4 x 5	2'–9"
18	19.50	3.50	8.88	24.83	12	3/4 x 5	3/4 x 5	3'–0"
20	21.60	3.50	8.88	27.08	14	3/4 x 6	3/4 x 5	3'–0"
24	25.80	3.50	8.88	31.58	16	3/4 x 6	3/4 x 5	3'–0"

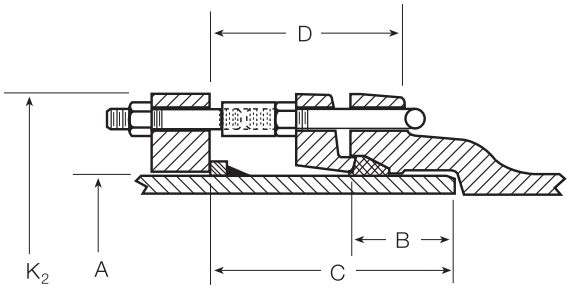

Table No. 9-14 **30"-48"**

Size in.	A Outside Diameter in.	B Socket Depth in.	C Plain End to Gland in.	K2 Gland O.D. in.	Bolts or Studs No.	Tee-Head Bolt in.	Stud in.	MJCJE & MJCJE Minimum Laying Length (ft.)
30	32.00	4.00	10.88	39.12	20	1 x 7	1 x 6	3'–6"
36	38.30	4.00	10.88	46.00	24	1 x 7	1 x 6	3'–6"
42	44.50	4.00	11.63	53.12	28	1 1/4 x 7	1 1/4 x 7	4'–0"
48	50.80	4.00	11.63	60.00	32	1 1/4 x 7	1 1/4 x 7	4'–0"
54	57.56	4.00	17.50	66.88	36	1 1/4 x 7	1 1/4 x 14	5'–6"

DUCTILE IRON FLANGED PIPE

REV 2016

APPLICATION

Most commonly used in rigid pipe systems in well supported above ground pipe installations. Ductile iron Flanged pipe is particularly suited for water filtration plants, sewage disposal plants, wastewater treatment plants, pumping and lift stations, and industrial process plant applications.

- The use of flanged joints in underground applications is generally not recommended. Piping should be properly anchored, supported, and restrained to prevent damage to flanges. Flanged faces should bear uniformily on the gasket. Bolts should be tightened in a progressively criss-crossed pattern, such as tightening the bottom remaining bolts in a similar fashion. This criss-cross pattern should be repeated until the appropriate torque is applied. Care should be taken NOT to overtighten the bolts. Overtightening the bolts or attempting to close excess "gaps" between flanges will cause damage to the flange and pipe.

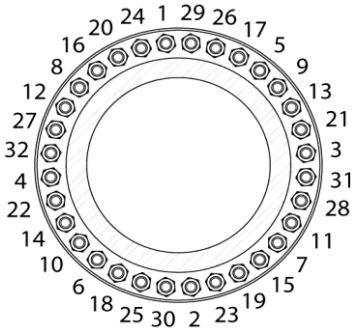

DUCTILE IRON FLANGED PIPE

- Ductile Iron Flanged Pipe is manufactured in accordance **ANSI/AWWA C115/A21.15** See attached TABLE 1 for technical data.

- Ductile iron pipe conforms to **ANSI/AWWA C151/A21.51**. Pipe shall be minimum Class 53. C&B uses ductile iron pipe made in the USA.
  Pipe Class submitted is noted below.

  CL 53 [X] CL54 [ ] CL55 [ ] CL56 [ ]

- Flanges are made of ductile iron and are drilled in accordance with **ANSI B16.1** CL 125 rated for 250 psi. ANSI CL 250 drilled flanges are available upon request. Flanges submitted are noted below. See attached TABLE 2 for technical data.

  CL125 [X] CL250 [ ]

  Flanges are manufactured from import sources. As an option to the customer, USA manufactured flanges may be selected. Flanges submitted are manufactured from

  IMPORT [ ] USA [X]

- C&B wall collars are industry standard and are made of ductile iron (ASTM A536-70:50:05) and are welded continously both sides of the collar with NI-55 weld rod. The collars are rated for 250 psi thrust load. See DI WALL PIPE submittal for technical data.

- C&B standard lining is double thickness cement mortar and bituminous seal coat in accordance with **ANSI/AWWA C104/A21.4** C&B offers special linings when required by the project per pipe system. Linings submitted are noted below.

  CEM [X] PROTECTO 401 [ ] CBGL911 GLASS [X]

- C&B standard exterior coating is bituminous asphalt in accordance with **ANSI/AWWA C151/A21.51**. If the pipe is required to be shop coated for temporary jobsite protection, refer to the included C&B Piping Coating Submittal attached.

30"-64" Flanged Pipe fabricated by C&B Piping, Inc will be furnished with FLANGE-TYTE Gaskets. This gasket is uniquely designed to perform best for use with ductile iron flanges.

If purchased from C&B, we can furnish 4"-24" FLANGE-TYTE Gaskets with your order at additional cost.

Approximate Bolt Torque (ft-lb)

	04"	06"	08"	10"	12"	14"	16"	18"	20"	24"	30"	36"	42"	48"	54"	60"	64"
150 PSI --->															550	600	600
250 PSI --->	90	90	90	90	90	110	110	120	120	130	140	160	585	625			
350 PSI --->	110	110	110	130	130	150	160	180	200	220							

DUCTILE IRON FLANGED PIPE

REV 2016

FLANGED PIPE

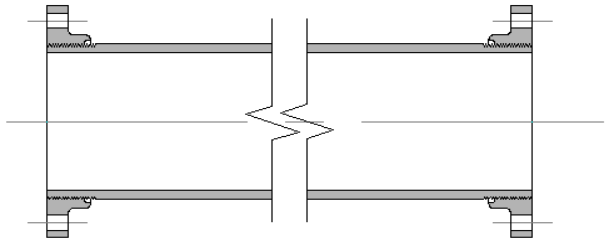

THREADED COMPANION FLANGE

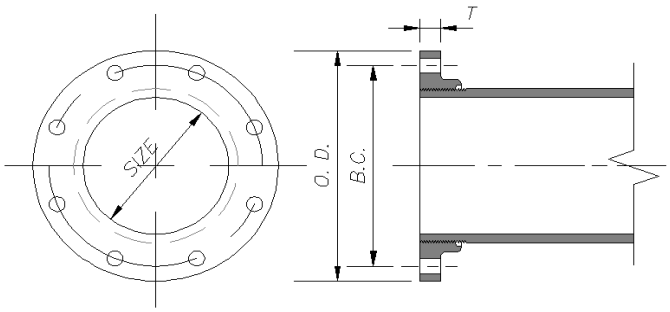

(IN.)	PRESSURE RATING PSI	OUTSIDE DIAM. (IN.)	MIN WALL THICKNESS (CL53) (IN)	WEIGHT IN POUNDS			
				MAX LENGTH (FT-IN)	FLANGE	W/O FLGS PER/FT	WITH FLGS PER/EA
03"	250	3.96	0.31	17' 6"	7	10.9	205
04"	250 ǂ	4.80	0.32	19' 6"	13	13.8	295
06"	250 ǂ	6.90	0.34	19' 6"	17	21.4	451
08"	250 ǂ	9.05	0.36	19' 6"	28	30.1	643
10"	250 ǂ	11.10	0.38	19' 6"	38	39.2	840
12"	250 ǂ	13.20	0.40	19' 6"	58	49.2	1075
14"	250 ǂ	15.30	0.42	19' 6"	72	60.1	1316
16"	250 ǂ	17.40	0.43	19' 6"	80	70.1	1527
18"	250 ǂ	19.50	0.44	19' 6"	90	80.6	1752
20"	250 ǂ	21.60	0.45	19' 6"	115	91.5	2014
24"	250 ǂ	25.80	0.47	19' 6"	160	114.4	2551
30"	250	32.00	0.51	17' 6"	240	154.4	3182
36"	250	38.30	0.58	17' 6"	350	210.3	4380
42"	250	44.50	0.65	17' 6"	500	274.0	5795
48"	250	50.80	0.72	19' 0"	625	346.6	7835
54"	250	57.56	0.81	19' 0"	670	441.9	9736
60"	250	61.61	0.83 ǂǂ	19' 0"	1035	485.0	11285
64"	250	65.67	0.87 ǂǂ	19' 0"	1510	542.0	13318

TABLE 1

SIZE (IN.)	DIMENSIONS IN INCHES				# BOLTS
	OD	BC	T	BOLT DIA & LENGTH	
03"	7.50	6.00	0.75 ± .12	5/8 X 2 1/2	4
04"	9.00	7.50	0.94 ± .12	5/8 X 3	8
06"	11.00	9.50	1.00 ± .12	3/4 x 3 1/2	8
08"	13.50	11.75	1.12 ± .12	3/4 x 3 1/2	8
10"	16.00	14.25	1.19 ± .12	7/8 x 4	12
12"	19.00	17.00	1.25 ± .12	7/8 x 4	12
14"	21.00	18.75	1.38 ± .19	1 x 4 1/2	12
16"	23.50	21.25	1.44 ± .19	1 x 4 1/2	16
18"	25.00	22.75		1 1/8 x 5	X
20"	27.50	25.00	1.69 ± .19	1 1/8 x 5	20
24"	32.00	29.50	1.88 ± .19	1 1/4 x 5 1/2	20
30"	38.75	36.00	2.12 ± .25	1 1/4 x 6 1/2	28
36"	46.00	42.75	2.38 ± .25	1 1/2 x 7	32
42"	53.00	49.50	2.62 ± .25	1 1/2 x 7 1/2	36
48"	59.50	56.00	2.75 ± .25	1 1/2 x 8	44
54"	66.25	62.75	3.00 ± .25	1 3/4 x 8 1/2	44
60"	73.00	69.25	3.12 ± .25	1 3/4 x 9	52
64"	80.00	76.00	3.38 ± .25	1 3/4 x 9	52

X

TABLE 2

ǂ *This size may be rated at 350 psi if FLANGE-TYTE gaskets are utilized during installation.*

ǂǂ *Wall thickness corresponds to CL350 or 60" and 64" diameters*

- *Flanges are plain faces without projection or raised face and are furnished smooth or with shallow serrations.*
- *Flanges may be back or spot faced for compliance with flange thickness tolerances.*
- *Pipe face-to-face dimensions conform to a tolerance of ±0.12 in. for FLG x FLG, ±0.25 in for FLG X PE. Some spools may be available at "exact" length if specified in advance. Additional charges will apply*
- *The bolt circle and bolt holes match those of ANSI/AWWA C115/A21.15 and CL125 flanges shown in ANSI B16.1. These flanges do not match the CL250 flange shown in ANSI B16.1 and cannot be joined with CL250 B16.1 fittings.*

FLANGED PIPE MIN LENGTHS

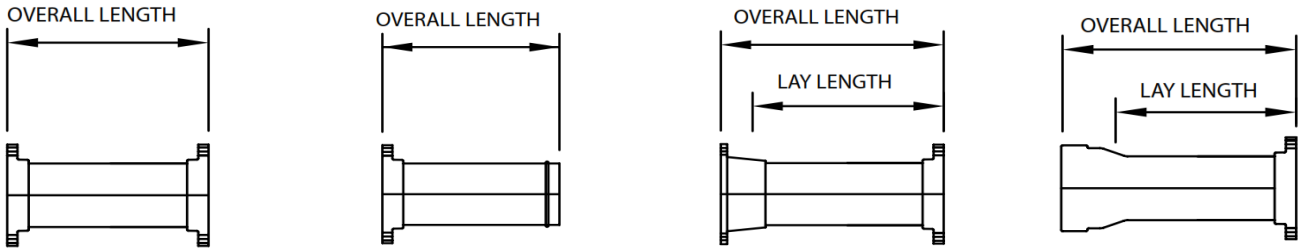

FLANGE - FLANGE | FLANGE - PLAIN END (TR or HP) | MJ - FLANGE | TR FLEX - FLANGE

SIZE (IN.)	F-F OA	F-PE OA	F-TRP OA	TMJ-FLG OA	TMJ-FLG LL	TMJ-TMJ OA	TMJ-TMJ LL	TR BELL-F OA	TR BELL-F LL
03"	4.25	2.75	X	6.50	4.00	9.00	4.00	X	X
04"	4.50	3.00	10.50	6.50	4.00	9.00	4.00	10.25	5.50
06"	5.00	3.25	11.50	7.00	4.50	9.50	4.50	11.00	5.75
08"	5.50	3.50	12.50	7.50	5.00	10.00	5.00	12.00	6.25
10"	5.75	3.75	13.00	7.75	5.25	10.25	5.25	12.25	6.25
12"	5.75	3.75	13.75	8.25	5.75	10.75	5.75	12.75	6.50
14"	5.75	3.75	15.50	9.75	6.25	13.50	6.50	15.00	7.25
16"	5.75	3.75	15.75	10.00	6.50	14.00	7.00	15.00	7.00
18"	6.00	3.75	16.50	10.25	6.75	14.50	7.50	15.25	7.00
20"	6.25	4.00	17.00	10.75	7.25	15.00	8.00	15.75	7.50
24"	6.75	4.25	18.00	11.25	7.75	15.50	8.50	16.25	7.50
30"	8.50	5.00	20.75	13.75	9.75	18.75	10.75	18.50	8.25
36"	9.50	5.50	22.50	14.75	10.75	20.00	12.00	19.75	9.00
42"	10.50	6.00	20.25	15.75	11.75	21.00	13.00	19.75	10.25
48"	10.75	6.25	21.00	16.00	12.00	21.00	13.00	20.25	12.25
54"	12.00	6.75	20.75	X	X	X	X	21.50	12.75
60"	12.50	7.00	22.50	X	X	X	X	21.75	11.75
64"	13.00	7.25	23.25	X	X	X	X	23.00	12.50

TABLE 3

For additional configurations not shown, please contact C&B Piping, Inc.

For RGRV x RGRV pipe, the min length for 3" & 4" is 4" OA, and 6"-36" is 0' 6" OA

DUCTILE IRON GROOVED PIPE

REV 2016

APPLICATION

Most commonly used in rigid pipe systems in well supported above ground pipe installations. Ductile iron grooved pipe is particularly suited for water filtration plants, sewage disposal plants, wastewater treatment plants, pumping and lift stations, and industrial process plant applications.

DUCTILE IRON GROOVED PIPE

- Ductile Iron Grooved Pipe is manufactured in accordance **ANSI/AWWA C606** See attached TABLE 1 for technical data.

- Ductile iron pipe conforms to **ANSI/AWWA C151/A21.51**. Pipe shall be minimum Class 53. C&B uses ductile iron pipe made in the USA.
  Pipe Class submitted is noted below.

  CL 53 [X] CL54 [ ] CL55 [ ] CL56 [ ]

- Unless otherwise requested by the customer, grooves are rigid style conforming to TABLE 1. Groove style submitted is noted below.

  RIGID [X] FLEX [ ]

- C&B wall collars are industry standard and are made of ductile iron (ASTM A536-70:50:05) and are welded continously both sides of the collar with NI-55 weld rod. The collars are rated for 250 psi thrust load. See DI WALL PIPE submittal for technical data.

- C&B standard lining is double thickness cement mortar and bituminous seal coat in accordance with **ANSI/AWWA C104/A21.4** C&B offers special linings when required by the project per pipe system. Linings submitted are noted below.

  CEM [X] PROTECTO 401 [ ] CBGL911 GLASS [X]

- C&B standard exterior coating is bituminous asphalt in accordance with **ANSI/AWWA C151/A21.51**. If the pipe is required to be shop coated for temporary jobsite protection, refer to the included C&B Piping Coating Submittal attached.

DUCTILE IRON GROOVED PIPE

REV 2016

RIGID RADIUS CUT GROOVED DI PIPE

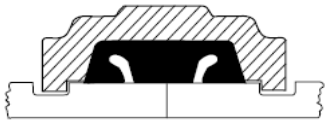

Rigid Radius Cut Groove

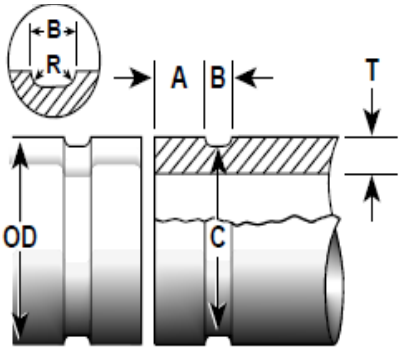

1	2			3	4	5		6	7
	PIPE OUTSIDE DIA O.D.			GASKET SEAT A+	GASKET WIDTH B	GROOVE DIA C**			
		TOLERANCE *							
(IN.)	BASIC (IN.)	+ (IN)	- (IN)	+0.000 -0.020	+0.031 -0.016	BASIC	TOL. +000.0	RADIUS R	MIN ALLOW. WALL THICK. T#
03"	3.96	+0.045	-0.045	0.840	0.375	3.723	-0.020	0.120	0.31
04"	4.80	+0.045	-0.045	0.840	0.375	4.563	-0.020	0.120	0.32
06"	6.90	+0.060	-0.060	0.840	0.375	6.656	-0.020	0.120	0.34
08"	9.05	+0.060	-0.060	0.950	0.500	8.781	-0.025	0.145	0.36
10"	11.10	+0.060	-0.060	1.015	0.500	10.813	-0.030	0.145	0.38
12"	13.20	+0.060	-0.060	1.015	0.500	12.906	-0.030	0.145	0.40
14"	15.30	+0.050	-0.080	1.015	0.625	14.969	-0.030	0.165	0.42
16"	17.40	+0.050	-0.080	1.340	0.625	17.063	-0.030	0.165	0.43
18"	19.50	+0.050	-0.080	1.340	0.625	19.125	-0.030	0.185	0.44
20"	21.60	+0.050	-0.080	1.340	0.625	21.219	-0.030	0.185	0.45
24"	25.80	+0.050	-0.080	1.340	0.625	25.406	-0.030	0.185	0.47
30"	32.00	+0.080	-0.060	1.625	0.750	31.550	-0.035	0.215	0.51
36"	38.30	+0.080	-0.060	1.625	0.750	37.850	-0.035	0.215	0.58

TABLE 1

* *Ovality, or out-of-roundness, must lie within specified tolerances*

** *Groove must be uniform depth for entire pipe circumference. Groove must conform to "C" diameter shown.*

*** *Must be smooth and free of deep pits or swells*

\# *Min. standard wall thickness that should be grooved. Tolerances are to conform to CL 53 AWWA C151.*

COLUMN 1 *Nominal AWWA Pipe Size*

COLUMN 2 ǂ *AWWA outside diameter. The outside diameter shall not vary more than the tolerance listed. The maximum allowable tolerance from square cut ends is 0.030" for 3", 0.045" for 4"-6", and 0.060" for sizes 8" and larger measured from true square line.*

COLUMN 3 ǂ *Gasket seat: The pipe surface shall be free from indentations and projections from the end of the pipe to the groove, to provide a leak tight seat for the gasket*

COLUMN 4 *Groove width*

COLUMN 5 ǂ *Groove outside diameter: The groove must be uniform*

X *depth for the entire circumference. Groove must maintained within the "C" diameter tolerance listed.*

COLUMN 6 *Groove depth: For reference only. Groove must conform to the groove diameter "C" listed.*

COLUMN 7 *Minimum allowable wall thickness. This is the minimum wall thickness which may be cut grooved.*

ǂ *Coatings applied to the interior surfaces, including bolt pad mating surfaces, of our bolted grooved and bolted plain end couplings should not exceed 0.010". Also coating thickness applied to the gasket seating surface and within the groove on the pipe exterior should not exceed 0.010".*

TYLER UNION®
Quality Waterworks Products

Dec. 12, 2012

C&B Piping Inc.
PO BOX 942
Leeds. AL 35094

Attn: Stephen Gables

Dear Sir:

Since the introduction of “Mechanical Joint Compact” fittings in the late 1970’s and the subsequent development of AWWA Standard C153 in 1984, “Compact” fittings have rapidly eroded the market for the older MJ C110 design fittings. The market for MJ C110 has eroded so extensively that we estimate the entire demand for MJ C110 is less than 5% of the MJ Fittings market in total. That estimate is based upon our own sales data and our knowledge of competitors’ product offerings.

The reason for the displacement of MJ C110 by MJ C153 is primarily the ease of handling and availability advantages of C153 over C110. Further, MJ C153 fittings have equal rated pressure ratings and have equal or better flow properties than MJ C110.

As a consequence and with a few exceptions, MJ C110 fittings are no longer maintained in stocking programs by manufacturers or distributors and thus lead times are longer. Recently, one of the major producers of larger diameter MJ C110 fittings announced that the production of those items was being phased out completely in 2013. We expect the decline in use of MJ C110 to continue and fully expect their eventual full disappearance from the market.

Respectfully,

Vincent R. Napoli
Tyler / Union
Pricing Coordinator/ Technical Support
256-240-4281
256-240-4214 (Fax)
Vince.napoli@Tylerunion.com

C153 DUCTILE IRON COMPACT FITTINGS

SAMPLE SPECIFICATIONS

(Current ANSI/AWWA revisions apply)

Mechanical joint watermain fittings with accessories, 2" through 64" shall be manufactured from ductile iron in accordance with and meet all applicable terms and provisions of standards ANSI/AWWA C153/A21.53 and ANSI/AWWA C111/A21.11. Ductile iron mechanical joint fittings 2" through 24" shall be rated for 350 psi working pressure. Ductile iron 30" through 48" shall be rated for 250 psi working pressure. Flanged ductile iron fittings in 4" (610 mm) and smaller sizes may be rated for 350 psi (2,413 kPa) with the use of special (annular ring or comparable) gaskets. All coated and lined fittings meet requirements of NSF-61, NSF-372 and Annex G.

NOTE: EXCEPTIONS: Mechanical joint fittings with flanged branches are rated for water pressure of 250 psi.

NOTE: Wyes over 12" are not pressure rated. Contact manufacturer for rating in your application.

NOTE: Fittings are cement lined and seal coated in accordance with ANSI/AWWA C104/A21.4. Fittings are available double cement-lined, bare, or epoxy coated upon request. Epoxy coating per ANSI/AWWA C116.

NOTE: Installation per AWWA C600 and AWWA C651, current revision.

Nominal Joint Dimensions in Inches														
Size	A	B	C	D	F	ø	X	J	K1	K2	L	M	O	S
2	2.51	2.50	3.50	3.60	2.61	28°	3/4	4.75	6.19	6.89	0.58	0.62	0.31	0.36
3	3.96	2.50	4.84	4.94	4.06	28°	3/4	6.19	7.62	7.69	0.58	0.62	0.31	0.39
4	4.80	2.50	5.92	6.02	4.90	28°	7/8	7.50	9.06	9.12	0.60	0.75	0.31	0.39
6	6.90	2.50	8.02	8.12	7.00	28°	7/8	9.50	11.06	11.12	0.63	0.88	0.31	0.43
8	9.05	2.50	10.17	10.27	9.15	28°	7/8	11.75	13.31	13.37	0.66	1.00	0.31	0.45
10	11.10	2.50	12.22	12.34	11.20	28°	7/8	14.00	15.62	15.62	0.70	1.00	0.31	0.47
12	13.20	2.50	14.32	14.44	13.30	28°	7/8	16.25	17.88	17.88	0.73	1.00	0.31	0.49
14	15.30	3.50	16.40	16.54	15.44	28°	7/8	18.75	20.25	20.25	0.79	1.25	0.31	0.55
16	17.40	3.50	18.50	18.64	17.54	28°	7/8	21.00	22.50	22.50	0.85	1.31	0.31	0.58
18	19.50	3.50	20.60	20.74	19.64	28°	7/8	23.25	24.75	24.75	1.00	1.38	0.31	0.68
20	21.60	3.50	22.70	22.84	21.74	28°	7/8	25.50	27.00	27.00	1.02	1.44	0.31	0.69
24	25.80	3.50	26.90	27.04	25.94	28°	7/8	30.00	31.50	31.50	1.02	1.56	0.31	0.75
30	32.00	4.00	33.29	33.46	32.17	20°	1 1/8	36.88	39.12	39.12	1.31	2.00	0.38	0.82
36	38.30	4.00	39.59	39.76	38.47	20°	1 1/8	43.75	46.00	46.00	1.45	2.00	0.38	1.00
42	44.50	4.00	45.79	45.96	44.67	20°	1 3/8	50.62	53.12	53.12	1.45	2.00	0.38	1.35
48	50.80	4.00	52.09	52.26	50.97	20°	1 3/8	57.50	60.00	60.00	1.45	2.00	0.38	1.35
54	57.56	4.00	58.82	59.02	57.73	20°	1 3/8	63.20	65.70	65.70	1.55	2.00	0.38	1.45
60	61.61	4.00	62.87	63.07	61.78	20°	1 3/8	67.72	70.22	70.22	1.75	2.00	0.38	1.50
64	65.67	4.00	66.96	67.13	65.84	20°	1 3/8	71.86	74.36	74.36	1.75	2.00	0.38	1.50

NOTE: For projects where product weights, specifications or dimensions are critical, advise upon order placement

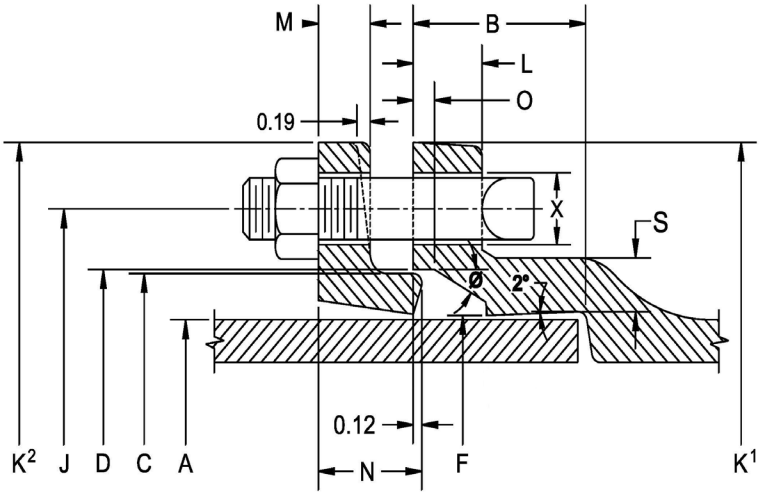

ANSI/AWWA
C153 Mechanical Joint Fittings

C153 DUCTILE IRON COMPACT FITTINGS

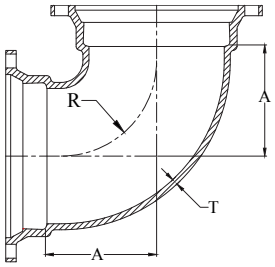

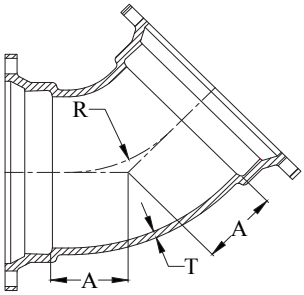

90° Bends (1/4)								45° Bends (1/8)				
Domestic					Import			Domestic			Import	
Size	T	A	R	Weight	T	A	Weight	A	R	Weight	A	Weight
3	0.34	3.50	2.50	26	0.33	3.50	19	2.00	2.41	17	1.50	16
4	0.35	4.00	3.00	26	0.34	4.00	24	2.50	3.56	22	2.00	22
6	0.37	6.00	5.00	45	0.36	5.00	39	3.50	7.25	38	3.00	32
8	0.39	7.00	6.00	62	0.38	6.50	57	4.00	8.44	51	3.50	46
10	0.41	7.50	6.50	89	0.40	7.50	89	5.00	10.88	75	4.50	70
12	0.43	9.00	8.00	114	0.42	9.00	108	5.98	13.25	108	5.50	101
14	0.51	12.00	11.50	210	0.47	11.50	210	5.50	12.06	156	5.00	160
16	0.52	13.00	12.50	268	0.50	12.50	264	5.50	10.42	191	5.50	202
18	0.59	14.00	13.00	375	0.54	14.00	335	6.00	11.18	252	6.00	250
20	0.60	17.00	15.50	443	0.57	15.00	400	7.00	13.59	303	7.00	305
24	0.62	17.00	15.50	663	0.61	16.75	565	7.50	14.89	398	7.50	405
30	0.66	21.50	19.00	1005	0.66	21.50	930	10.50	9.31	850	10.50	780
36	0.74	24.50	22.00	1540	0.74	24.50	1450	11.50	21.73	1135	11.50	1135
42	0.82	29.25	26.70	2380	0.82	29.25	2205	14.00	27.76	1675	14.00	1610
48	0.90	33.25	30.80	3084	0.90	33.25	2990	15.00	30.17	2196	15.00	2090

****NOTE:** Other sizes available, contact Tyler Union for information

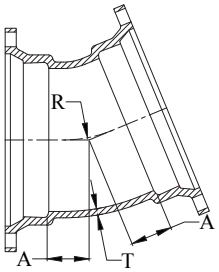

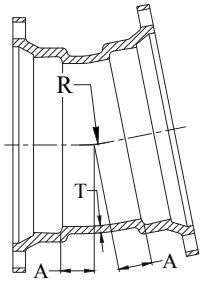

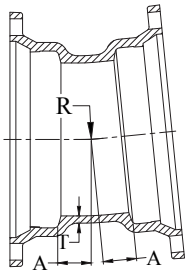

22½° Bends (1/16)						11¼° Bends (1/32)					5 - 5/8 Bends (1/64) MJ x MJ		
Domestic				Import		Domestic			Import		Import		
Size	A	R	Weight	A	Weight	A	R	Weight	A	Weight	A	R	Weight
3	1.50	2.51	16	1.00	15	1.25	2.53	15	1.00	14	1.25	5.08	16
4	1.75	3.81	21	1.50	18	1.50	5.12	21	1.30	16	1.50	7.61	18
6	2.25	6.35	31	2.00	31	1.50	5.12	30	1.50	30	1.50	10.15	29
8	2.85	11.80	44	2.50	46	2.06	15.80	43	1.80	42	1.75	12.69	45
10	3.35	14.35	67	3.00	64	2.32	18.36	58	2.00	58	2.00	15.23	59
12	3.86	16.90	81	3.50	80	2.56	20.90	68	2.30	67	2.30	17.77	82
14	3.93	17.25	139	3.75	136	2.59	21.25	123	2.50	93	2.50	20.31	136
16	3.98	17.50	172	3.75	172	2.62	21.50	145	2.50	148	2.50	20.31	157
18	4.50	15.11	275	4.50	255	3.00	16.52	205	3.00	205	3.00	25.38	283
20	4.50	15.07	341	4.50	310	3.00	15.23	245	3.00	245	3.00	25.38	374
24	4.50	15.51	333	4.50	366	3.00	16.10	304	3.00	315	3.00	25.38	487
30	6.75	21.36	670	6.75	665	4.75	22.84	551	4.80	600	3.75	32.97	600
36	7.75	26.39	978	7.75	960	5.00	25.38	870	5.00	820	4.00	34.55	820
42	9.00	32.68	1352	9.00	1350	6.00	35.54	1163	6.00	1180	5.00	42.71	1180
48	10.00	27.70	1757	10.00	1760	6.50	40.61	1474	6.50	1475	5.50	47.35	1475

NOTE: Contact Tyler Union for details on 54" through 64" **NOTE:** For projects where product weights, specifications or dimensions are critical, advise upon order placement.

C153 DUCTILE IRON COMPACT FITTINGS

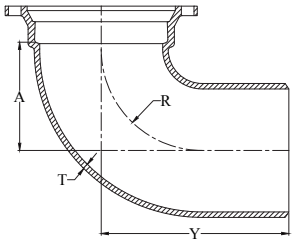

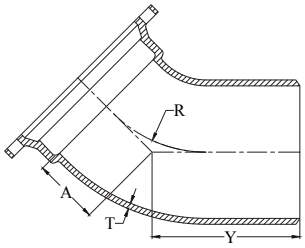

90° Bend MJ x PE (1/4)										45° Bend MJ x PE (1/8)						
Domestic						Import				Domestic				Import		
Size	T	A	Y	R	Weight	T	A	Y	Weight	A	Y	R	Weight	A	Y	Weight
3	0.34	3.50	9.00	2.50	17	0.33	3.25	8.50	16	2.00	7.50	2.41	17	1.50	7.00	13
4	0.35	4.00	9.50	3.00	26	0.34	4.00	9.50	22	2.50	8.00	3.56	21	2.00	7.50	19
6	0.37	6.00	11.50	5.00	41	0.36	5.00	11.50	41	3.20	8.70	5.49	35	3.00	8.50	34
8	0.39	7.50	13.00	7.00	64	0.38	6.50	12.50	58	4.00	9.50	8.44	54	3.50	9.00	49
10	0.41	9.50	15.00	9.00	89	0.40	7.50	13.00	83	5.00	10.50	10.88	69	4.50	10.00	69
12	0.43	9.00	14.40	6.00	121	0.42	9.00	14.50	114	6.00	11.50	13.25	94	5.50	11.00	93
14	0.51	12.00	20.00	11.50	221	0.47	11.50	19.50	197	5.50	13.40	10.85	170	5.00	13.00	146
16	0.52	13.00	21.00	12.50	261	0.50	12.50	20.50	248	6.00	14.00	13.25	188	5.50	13.50	184
18	0.59	15.50	23.50	14.00	–	0.54	14.00	22.00	360	6.00	14.00	11.18	–	6.00	11.18	240
20	0.60	15.00	23.00	13.50	400	0.57	15.00	22.50	390	7.00	15.30	13.97	290	7.00	14.00	290
24	0.62	17.00	25.00	15.50	600	0.61	17.00	25.00	575	7.50	16.60	14.69	410	7.50	14.50	390
30	0.68	21.50	30.50	19.00	865	0.66	21.50	30.50	865	10.50	19.50	19.31	715	10.50	19.50	715

Tyler Union does not recommend the use of wedge action restraints on plain end fittings

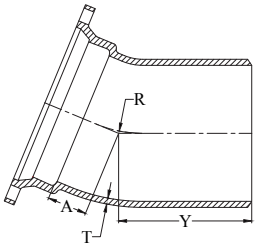

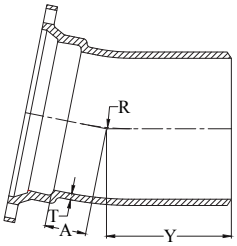

22 1/2° Bend MJ x PE (1/16)								11 1/4° Bend MJ x PE (1/32)						
Domestic					Import			Domestic				Import		
Size	A	Y	R	Weight	A	Y	Weight	A	Y	R	Weight	A	Y	Weight
3	1.50	7.00	2.51	15	1.00	6.50	12	1.25	6.75	7.62	15	1.00	6.50	12
4	1.75	7.25	3.81	17	1.50	7.00	18	1.50	7.00	5.12	17	1.25	6.25	17
6	2.25	7.75	6.35	28	2.00	7.50	29	1.50	7.00	5.12	29	1.50	7.00	27
8	2.84	8.34	11.80	44	2.50	8.00	43	2.05	7.55	15.80	38	1.75	7.25	39
10	3.35	8.85	14.35	64	3.00	8.50	61	2.31	7.81	18.36	52	2.00	7.50	52
12	3.50	9.00	12.70	77	3.50	9.00	79	2.56	8.06	20.90	86	2.25	7.75	69
14	3.93	11.93	17.25	121	3.75	11.25	133	2.59	10.59	21.25	134	2.50	10.50	118
16	3.98	11.98	17.50	167	3.75	11.75	166	2.62	10.62	21.50	161	2.50	10.50	136
18	4.50	12.50	15.11	–	4.50	12.50	248	3.00	11.00	16.52	–	3.00	11.00	248
20	7.00	14.00	35.19	290	7.00	14.00	300	7.00	14.00	21.07	290	7.00	14.00	300
24	9.00	17.66	37.69	345	7.50	14.50	395	9.00	26.12	12.00	475	7.50	14.50	400
30	6.75	15.75	21.36	600	6.75	15.75	600	4.75	13.75	22.84	535	4.75	13.75	535

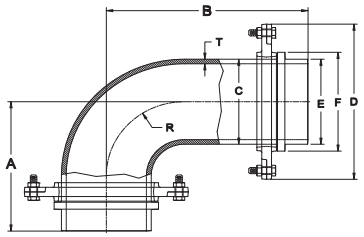

90° Swivel x Swivel Hydrant Ell									
Size	T	A	B	C	D	E	F	R	**Weight
6	0.37	10.50	15.50	6.90	11.20	6.81	7.98	6.00	68

NOTE: **Weight includes two swivel glands.

C153 DUCTILE IRON COMPACT FITTINGS

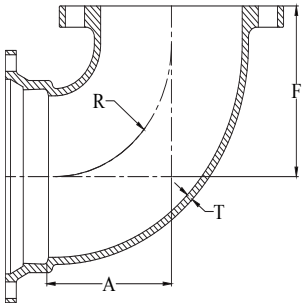

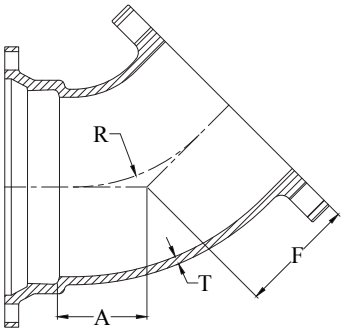

90° Bend MJ x FE (1/4)										45° Bends MJ x FE (1/8)						
Domestic						Import				Domestic				Import		
Size	T	A	R	F	Weight	T	A	F	Weight	A	F	R	Weight	A	F	Weight
3	0.34	3.50	2.50	5.50	21	0.34	4.00	5.50	21	–	–	–	–	–	–	–
4	0.35	4.00	3.00	6.50	33	0.35	4.50	6.50	36	2.50	4.00	3.56	34	2.50	4.00	24
6	0.37	6.00	5.00	8.00	49	0.37	6.00	8.00	51	3.25	5.00	5.49	39	3.25	5.00	37
8	0.39	7.50	7.00	9.00	67	0.39	7.00	9.00	83	4.25	5.50	7.93	54	3.75	5.50	71
10	0.41	9.50	9.00	11.00	106	0.41	7.50	11.00	109	5.00	6.50	9.76	84	4.75	6.50	103
12	0.43	10.50	10.00	12.00	148	0.43	9.25	12.00	150	6.00	7.50	12.19	112	5.75	7.50	151
14	0.51	12.00	11.50	14.00	217	0.51	11.50	14.00	275	5.50	8.50	10.85	181	5.00	7.50	207
16	0.52	13.00	12.50	15.00	297	0.52	12.50	15.00	335	5.50	9.00	10.42	218	5.75	8.00	311
18	0.59	15.50	14.00	19.00	–	0.54	14.50	16.50	–	6.50	10.00	12.36	–	6.50	8.50	–
20	0.60	15.00	15.50	18.50	–	0.57	15.00	18.00	–	7.00	10.50	13.59	–	7.50	9.50	–
24	0.62	17.00	15.50	20.50	–	0.62	16.75	22.00	618	7.50	11.00	14.89	–	8.00	11.00	575
30	0.68	21.50	19.00	26.00	–	0.68	21.50	26.00	1014	10.50	15.00	9.31	–	10.50	15.00	794

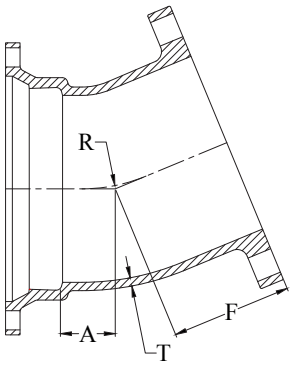

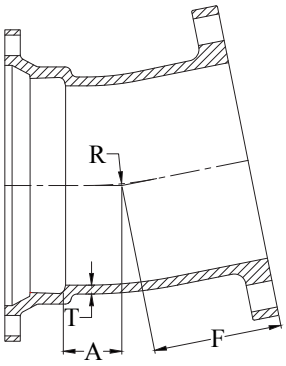

22 1/2° Bend MJ x FE (1/16)								11 1/4° Bends MJ x FE (1/32)						
Domestic					Import			Domestic				Import		
Size	A	F	R	Weight	A	F	Weight	A	F	R	Weight	A	F	Weight
3	–	–	–	–	–	–	–	–	–	–	–	–	–	–
4	1.75	4.00	3.81	21	1.50	7.00	32	1.50	7.00	5.12	20	1.50	4.00	28
6	2.25	5.00	5.35	32	2.00	7.50	41	1.50	7.00	5.12	29	1.75	5.00	40
8	2.84	5.50	7.62	46	2.50	8.00	64	2.05	7.55	15.80	42	2.00	5.50	53
10	3.35	6.50	10.16	78	3.00	8.50	92	2.31	7.81	18.36	58	2.25	6.50	88
12	3.50	7.50	12.70	106	3.50	9.00	132	2.56	8.06	20.90	85	2.50	7.50	114
14	–	–	–	–	–	–	–	–	–	–	–	–	–	–
16	–	–	–	–	–	–	–	–	–	–	–	–	–	–
18	4.50	15.11	8.00	–	–	–	–	3.00	6.50	16.52	–	–	–	–
20	4.50	15.07	8.00	–	–	–	–	3.00	6.50	15.23	–	–	–	–
24	4.50	15.51	8.00	–	–	–	–	3.00	6.50	16.10	–	–	–	–
30	6.75	21.36	11.25	–	–	–	–	4.75	7.25	22.84	–	–	–	–

C153 DUCTILE IRON COMPACT FITTINGS

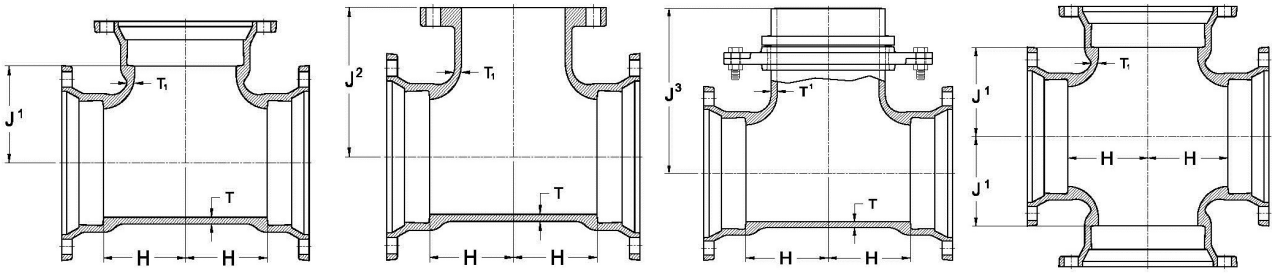

MJ Tee							MJxFE Tee				MJxSwivel Tee				Cross	
Domestic							Weight				Import				Weight	
Size	T	T1	H	J1	J2	J3	MJ	MJ x FE	†MJ x S	Cross	T	T1	H	J1	MJ	Cross
3	0.34	0.34	3.50	3.50	5.50	–	26	29	–	31	0.33	0.33	3.00	3.00	28	35
4x3	0.35	0.34	3.50	4.00	6.50	–	35	34	–	39	0.34	0.33	3.50	4.00	30	34
4	0.35	0.35	4.00	4.00	6.50	–	37	39	–	45	0.34	0.34	4.00	4.00	32	40
6x3	0.37	0.34	4.00	4.00	6.50	–	51	54	–	–	0.36	0.33	3.50	5.00	42	–
6x4	0.37	0.35	5.00	6.00	8.00	–	52	57	–	62	0.36	0.34	4.00	5.00	46	57
6	0.37	0.37	6.00	6.00	8.00	10.50	62	69	61	72	0.36	0.36	5.00	5.00	56	75
8x3	0.39	0.34	4.00	6.50	9.00	–	56	–	–	–	–	–	–	–	–	–
8x4	0.39	0.35	5.00	6.50	9.00	–	68	82	–	84	0.38	0.34	4.00	6.50	60	68
8x6	0.39	0.37	5.50	6.50	9.00	11.50	79	87	74	98	0.38	0.36	5.00	6.50	72	74
8	0.39	0.39	6.50	6.50	9.00	11.50	89	101	116	112	0.38	0.38	0.38	6.50	86	105
10x3	0.41	0.34	4.00	7.50	11.00	–	80	–	–	–	–	–	–	–	–	–
10x4	0.41	0.35	4.50	7.50	11.00	–	82	92	–	98	0.40	0.34	4.00	7.50	78	84
10x6	0.41	0.37	5.50	7.50	11.00	13.00	99	116	114	121	0.40	0.36	5.00	7.50	90	119
10x8	0.41	0.39	6.50	7.50	11.00	13.00	116	128	138	135	0.40	0.38	6.50	7.50	105	124
10	0.41	0.41	7.50	7.50	11.00	–	132	144	–	156	0.40	0.40	7.50	7.50	120	145
12x3	0.43	0.34	4.00	8.75	12.00	–	99	–	–	–	–	–	–	–	–	–
12x4	0.43	0.35	4.00	9.00	12.00	–	108	118	–	119	0.42	0.34	4.00	8.75	94	119
12x6	0.43	0.37	5.00	9.00	12.00	14.25	119	133	132	138	0.42	0.34	4.00	8.75	110	126
12x8	0.43	0.39	6.50	9.00	12.00	14.25	126	146	149	149	0.42	0.38	6.50	8.75	125	149
12x10	0.43	0.41	7.50	8.75	12.00	–	159	174	–	187	0.42	0.40	7.50	8.75	140	179
12	0.43	0.43	8.75	8.75	12.00	–	171	198	–	202	0.42	0.42	8.75	8.75	160	213
14x6	0.51	0.44	6.50	10.50	14.00	16.00	183	205	211	210	0.47	0.36	6.50	10.50	182	200
14x8	0.51	0.45	7.50	10.50	14.00	–	211	–	–	231	0.47	0.38	7.50	10.50	206	228
14x10	0.51	0.46	8.50	10.50	14.00	–	229	244	–	255	0.47	0.40	8.50	10.50	228	–
14x12	0.51	0.47	9.50	10.50	14.00	–	245	284	–	269	0.47	0.42	9.50	10.50	234	–
14	0.51	0.51	10.50	10.50	14.00	–	281	291	–	299	0.47	0.47	10.50	10.50	280	299
16x6	0.52	0.45	6.50	11.50	14.00	16.00	222	230	243	250	0.50	0.36	6.50	11.50	228	240
16x8	0.52	0.46	7.50	11.50	15.00	–	245	248	–	264	0.50	0.38	7.50	11.50	248	385
16x10	0.52	0.47	8.50	11.50	15.00	–	265	287	–	286	0.50	0.40	8.50	11.50	264	–
16x12	0.52	0.48	9.50	11.50	15.00	–	277	312	–	312	0.50	0.42	9.50	11.50	280	–
16x14	0.52	0.51	10.50	11.50	15.00	–	317	348	–	–	0.50	0.47	10.50	11.50	316	–
16	0.52	0.52	11.50	11.50	15.00	–	337	324	–	451	0.50	0.50	11.50	11.50	322	–
18x6	0.59	0.44	6.50	14.50	15.50	18.00	275	261	279	–	0.54	0.36	6.50	12.50	275	–
18x8	0.59	0.45	7.50	14.50	14.50	–	280	351	–	–	0.54	0.38	7.50	12.50	295	–
18x10	0.59	0.47	8.50	12.50	–	–	286	–	–	–	0.54	0.40	8.50	12.50	315	–
18x12	0.59	0.49	9.50	12.50	–	–	372	–	–	–	0.54	0.42	9.50	12.50	335	348
18x14	0.59	0.56	10.50	12.50	–	–	415	–	–	–	0.54	0.47	10.50	12.50	380	–
18x16	0.59	0.57	11.50	12.50	–	–	445	–	–	–	0.54	0.50	11.50	12.50	405	–
18	0.59	0.59	13.00	12.50	–	–	490	–	–	–	0.54	0.54	12.50	12.50	435	348
20x6	0.60	0.44	7.00	14.00	16.00	19.50	335	362	358	–	0.57	0.36	6.50	14.00	315	–
20x8	0.60	0.45	8.00	14.00	–	–	390	–	–	–	0.57	0.38	8.00	14.00	345	379
20x10	0.60	0.47	9.00	14.00	–	–	417	–	–	–	0.57	0.40	9.00	14.00	370	–
20x12	0.60	0.49	10.00	14.00	–	–	460	–	–	–	0.57	0.42	10.00	14.00	395	413
20x14	0.60	0.56	11.00	14.00	–	–	475	–	–	–	0.57	0.47	11.00	14.00	440	–
20x16	0.60	0.57	12.00	14.00	–	–	530	–	–	–	0.57	0.50	12.00	14.00	465	–
20x18	0.60	0.59	13.00	14.00	–	–	560	–	–	–	0.57	0.54	13.00	14.00	505	–
20	0.60	0.60	14.00	14.00	–	–	605	–	–	–	0.57	0.57	14.00	14.00	535	–

NOTE: Contact TU Inside Sales representative for MJ Crosses larger than 16 inch. †MJxSwl Weights include swivel gland
****NOTE**: Other sizes available, contact Tyler Union for information.

C153 DUCTILE IRON COMPACT FITTINGS

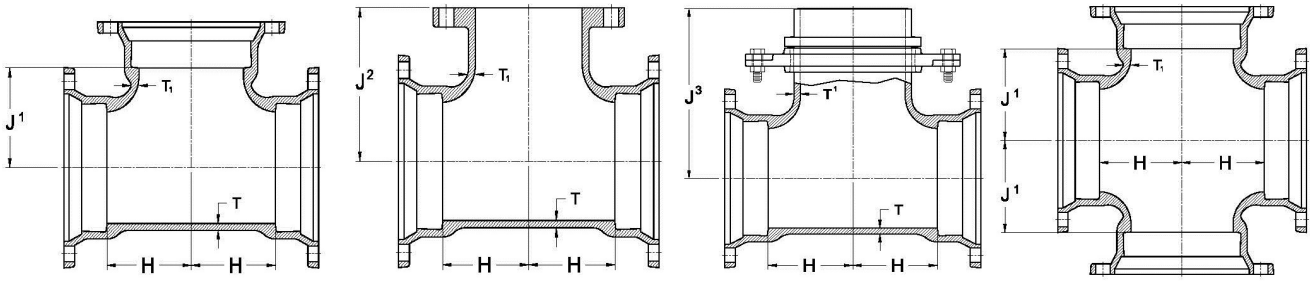

MJ Tee							MJxFE Tee			MJxSwivel Tee				Cross	
Domestic							Weight			Import				Weight	
Size	T	T1	*H	*J1	*J2	*J3	MJ	MJ x FE	†MJ x S	T	T1	H	J1	MJ	Cross
24x6	0.62	0.44	7.00	16.00	19.00	21.50	465	451	457	0.61	0.36	7.00	16.00	415	–
24x8	0.62	0.45	8.00	16.00	–	–	475	–	–	0.61	0.38	8.00	16.00	445	481
24x10	0.62	0.47	9.00	16.00	–	–	516	–	–	0.61	0.40	9.00	16.00	470	–
24x12	0.62	0.49	10.00	16.00	–	–	549	580	–	0.61	0.42	10.00	16.00	500	529
24x14	0.62	0.56	11.00	16.00	–	–	585	–	–	0.61	0.47	11.00	16.00	550	–
24x16	0.62	0.57	12.00	16.00	–	–	625	744	–	0.61	0.50	12.00	16.00	580	576
24x18	0.62	0.59	13.00	16.00	–	–	675	–	–	0.61	0.54	13.00	16.00	625	–
24x20	0.62	0.60	14.00	16.00	–	–	740	–	–	0.61	0.57	14.00	16.00	660	1589
24	0.62	0.62	16.00	16.00	–	–	844	–	–	0.61	0.61	16.00	16.00	720	–
30x6	0.66	0.36	8.00	20.00	–	–	700	–	–	0.66	0.36	8.00	20.00	685	–
30x8	0.66	0.38	8.50	20.00	–	–	739	–	–	0.66	0.38	8.50	20.00	739	–
30x12	0.66	0.42	10.00	20.00	–	–	739	–	–	0.66	0.42	10.00	20.00	830	882
30x16	0.66	0.50	12.50	20.00	–	–	959	–	–	0.66	0.50	12.50	20.00	959	–
30x18	0.66	0.52	13.00	20.00	–	–	975	–	–	0.66	0.54	13.00	20.00	1039	–
30x20	0.66	0.57	15.00	20.00	–	–	995	–	–	0.66	0.57	15.00	20.00	995	–
30x24	0.66	0.61	16.00	20.00	–	–	1160	–	–	0.66	0.61	16.00	20.00	1060	1246
30	0.66	0.66	20.00	20.00	–	–	1323	–	–	0.66	0.66	20.00	20.00	1323	1840
36x6	0.74	0.36	7.00	23.50	–	–	630	–	–	0.74	0.36	8.00	23.50	685	–
36x8	0.74	0.38	9.00	23.50	–	–	739	–	–	0.74	0.38	8.50	23.50	739	–
36x10	0.74	0.47	10.00	23.50	–	–	739	–	–	0.74	0.40	10.00	23.50	830	882
36x12	0.74	0.49	10.00	23.50	–	–	959	–	–	0.74	0.42	12.50	23.50	959	–
36x14	0.74	0.56	12.50	23.50	–	–	1103	–	–	0.74	0.47	10.00	23.50	1146	–
36x16	0.74	0.57	12.50	23.50	–	–	1385	–	–	0.74	0.50	12.50	23.50	1190	–
36x18	0.74	0.59	13.00	23.50	–	–	1400	–	–	0.74	0.54	12.50	23.50	1410	–
36x20	0.74	0.60	15.00	23.50	–	–	1521	–	–	0.74	0.57	12.50	23.50	1365	–
36x24	0.74	0.61	16.00	23.50	–	–	1533	–	–	0.74	0.61	16.00	23.50	1446	1785
36x30	0.74	0.66	20.00	23.50	–	–	2270	–	–	0.74	0.66	20.00	23.50	1675	–
36	0.74	0.74	23.50	23.50	–	–	1910	–	–	0.74	0.74	23.50	23.50	2015	2655
42x12	0.82	0.62	10.00	27.50	–	–	1410	–	–	0.82	0.42	10.00	27.50	1885	–
42x24	0.82	0.62	20.00	27.50	–	–	2295	–	–	0.82	0.61	20.00	27.50	2270	2668
42x30	0.82	0.66	22.00	29.50	–	–	2337	–	–	0.82	0.66	22.00	30.00	2425	2950
42x36	0.82	0.74	30.00	30.00	–	–	3000	–	–	0.82	0.74	30.00	30.00	3000	3607
42	0.82	0.82	30.00	30.00	–	–	3169	–	–	0.82	0.82	30.00	30.00	3175	3725
48x12	0.90	0.62	9.00	32.00	–	–	2500	–	–	0.90	0.42	9.00	32.00	2535	–
48x24	0.90	0.62	23.00	32.00	–	–	2822	–	–	0.90	0.74	23.00	32.00	2870	–
48x36	0.90	0.82	33.50	33.25	–	–	3982	–	–	0.90	0.74	33.50	33.25	3900	–
48x42	0.90	0.82	33.50	33.50	–	–	4100	–	–	0.90	0.82	33.50	33.50	4100	–
48	0.90	0.82	33.50	33.50	–	–	4251	–	–	0.90	0.90	33.50	33.50	4250	4955

† Weight includes the swivel gland.

C153 DUCTILE IRON COMPACT FITTINGS

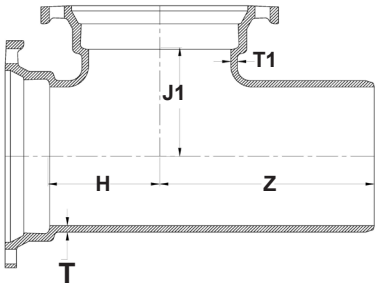

MJxPExMJ TEES												
	Domestic						Import					
Size	T	T1	*H	*J1	*Z	Weight	T	T1	*H	*J1	*Z	Weight
6	0.37	0.37	5.00	5.00	11.50	57	0.37	0.37	8.00	8.00	16.00	57
8x6	0.39	0.37	5.50	6.50	11.50	79	0.39	0.37	9.00	9.00	17.00	79
8	0.39	0.39	6.50	6.50	12.50	81	0.38	0.38	9.00	9.00	17.00	77
10	0.41	0.41	7.50	7.50	13.00	133	0.40	0.40	11.00	11.00	19.00	120

Tyler Union does not recommend the use of wedge action restraints on plain end fittings

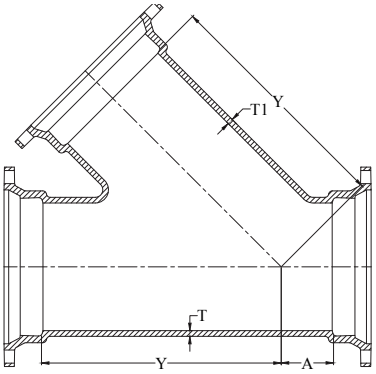

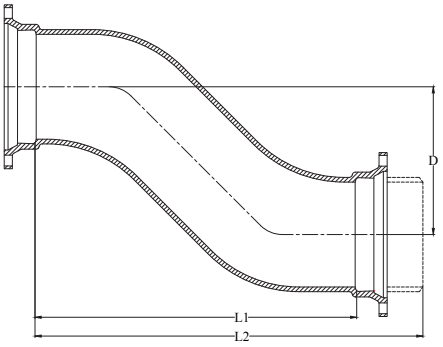

WYES/LATERAL					
Size	*A	*Y	T	T1	Weights
3	2.50	7.50	0.34	0.34	36
4x3	2.00	8.50	0.35	0.34	39
4	2.50	8.50	0.35	0.35	45
6x4	1.50	11.00	0.37	0.35	67
6	3.00	13.00	0.37	0.37	85
8x4	0.50	13.00	0.39	0.35	86
8x6	2.00	16.00	0.39	0.37	109
8	3.50	16.00	0.39	0.39	117
10x4	0.00	15.00	0.41	0.35	112
10x6	1.00	16.00	0.41	0.37	129
10x8	2.50	17.00	0.41	0.39	162
10	3.50	19.00	0.41	0.41	199
12x4	0.00	16.50	0.43	0.35	141
12x6	1.50	18.50	0.43	0.37	170
12x8	1.50	18.50	0.43	0.39	177
12x10	3.00	20.00	0.43	0.41	216
12	4.50	22.50	0.43	0.43	269
14	6.00	25.00	0.51	0.51	476
16x6	0.00	21.00	0.52	0.45	300
16x8	0.50	22.50	0.52	0.46	349
16x12	3.50	25.00	0.52	0.48	471
16	6.50	28.00	0.52	0.52	635

*Not in AWWA C153. "A" & "Y" are approximate dim.

OFFSETS (MJ x MJ) or (MJxPE)					
	Import			Weights	
Size	D	L1	L2	MJ x MJ	MJ x PE
3	6.00	9.00	14.50	23	29
3	12.00	15.00	20.50	34	39
3	18.00	21.00	26.50	40	48
3	24.00	27.00	32.50	47	53
4	6.00	10.00	15.50	32	44
4	12.00	6.00	21.50	42	54
4	18.00	22.00	27.50	56	65
4	24.00	28.00	33.50	65	72
6	6.00	12.00	17.50	55	54
6	12.00	18.00	23.50	72	68
6	18.00	24.00	29.50	88	96
6	24.00	30.00	35.50	111	117
8	6.00	13.00	18.50	79	78
8	12.00	19.00	24.50	103	110
8	18.00	25.00	30.50	128	124
10	6.00	15.00	20.50	112	130
10	12.00	21.00	26.50	148	172
10	18.00	27.00	32.50	176	189
12	6.00	17.00	22.50	157	–
12	12.00	23.00	28.50	174	198
12	18.00	29.00	34.50	210	270
12	24.00	35.00	40.50	298	334
12	30.00	41.00	46.50	283	205

C153 DUCTILE IRON COMPACT FITTINGS

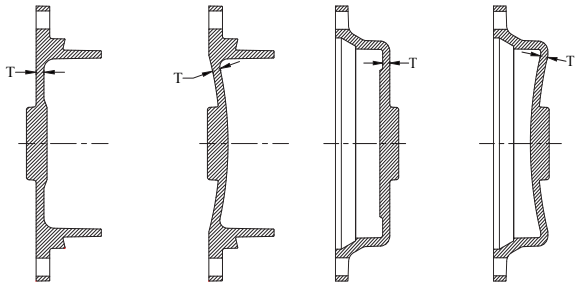

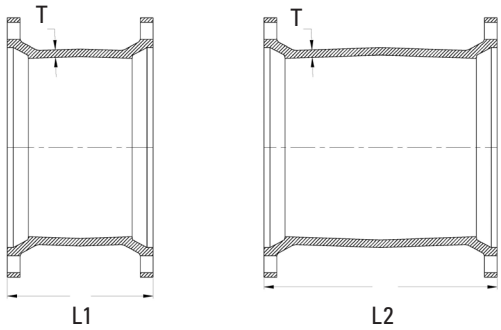

SOLID & TAPPED PLUGS & CAPS							
Domestic					Import		
Size	T	Max. Tap	Weight		T	Weight	
			Plugs	Caps		Plugs	Caps
3	0.46	2	9	8	0.33	8	8
4	0.46	2	9	10	0.34	10	9
6	0.46	2	13	18	0.36	16	15
8	0.46	2	25	26	0.38	26	22
10	0.56	2	36	32	0.40	36	32
12	0.56	2	47	46	0.42	46	42
14	0.62	2	76	85	0.47	75	66
16	0.62	2	98	94	0.50	95	92
18	0.65	2	138	121	0.54	121	114
20	0.66	2	158	149	0.57	135	125
24	0.68	2	202	232	0.61	296	198
30	0.66	2	426	345	0.66	355	345
36	0.74	2	560	626	0.74	688	628
42	0.82	2	1091	723	0.82	–	–
48	0.90	2	1455	974	0.90	–	–

SOLID SLEEVES										
Domestic						Import				
Size	T	L1	L2	Weight		T	L1	L2	Weight	
				Short	Long				Short	Long
3	0.34	7.50	12.00	13	22	0.33	7.50	12.00	12	17
4	0.35	7.50	12.00	19	25	0.34	7.50	12.00	15	20
6	0.37	7.50	12.00	28	37	0.36	7.50	12.00	23	29
8	0.39	7.50	12.00	38	49	0.38	7.50	12.00	31	45
10	0.41	7.50	12.00	48	68	0.40	7.50	12.00	45	61
12	0.43	7.50	12.00	58	81	0.42	7.50	12.00	56	76
14	0.56	9.50	15.00	107	153	0.47	9.50	15.00	94	128
16	0.57	9.50	15.00	116	174	0.50	9.50	15.00	118	159
18	0.68	9.50	15.00	154	207	0.54	9.00	15.00	145	200
20	0.69	9.50	15.00	200	249	0.57	9.00	15.00	173	236
24	0.75	9.50	15.00	232	323	0.61	9.00	15.00	226	306
30	0.74	15.00	24.00	549	640	0.66	15.00	24.00	472	634
36	0.74	15.00	24.00	725	868	0.74	15.00	24.00	673	889
42	0.82	–	24.00	–	1146	0.82	15.00	24.00	887	1150
48	0.90	–	24.00	–	1431	0.90	15.00	24.00	1136	1435

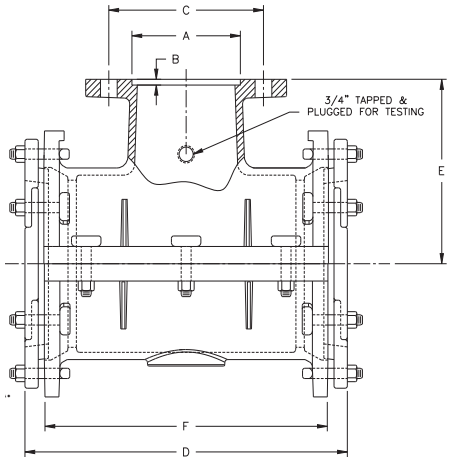

TAPPING SLEEVE FOR CAST IRON/DUCTILE IRON									
Size	A	B	C	D	E	F	Min.	Max	Weight
6X4	5.016	0.250	7.50	15.75	8.00	12.75	6.85	7.15	104
6	7.016	0.312	9.50	15.75	8.00	12.75	6.85	7.15	108
8X4	5.016	0.250	7.50	16.50	9.00	13.50	9.00	9.35	134
8X6	7.016	0.312	9.50	16.50	9.00	13.50	9.00	9.35	140
8	9.016	0.312	11.75	16.50	9.00	13.50	9.00	9.35	148
10X4	5.016	0.250	7.50	24.00	11.00	20.75	11.04	11.45	236
10X6	7.016	0.312	9.50	24.00	11.00	20.75	11.04	11.45	240
10X8	9.016	0.312	11.75	24.00	11.00	20.75	11.04	11.45	246
10	11.016	0.312	14.25	24.00	11.00	20.75	11.04	11.45	257
12X4	5.016	0.250	7.50	26.50	12.00	23.25	13.14	13.56	273
12X6	7.016	0.312	9.50	26.50	12.00	23.25	13.14	13.56	286
12X8	9.016	0.312	11.75	26.50	12.00	23.25	13.14	13.56	292
12X10	11.016	0.312	14.25	26.50	12.00	23.25	13.14	13.56	303
12	13.016	0.312	17.00	26.50	12.00	23.25	13.14	13.56	320

Note: Visit www.tylerunion.com for assembly instructions.
Tapping sleeve is assembled with gland and gasket.

C153 DUCTILE IRON COMPACT FITTINGS

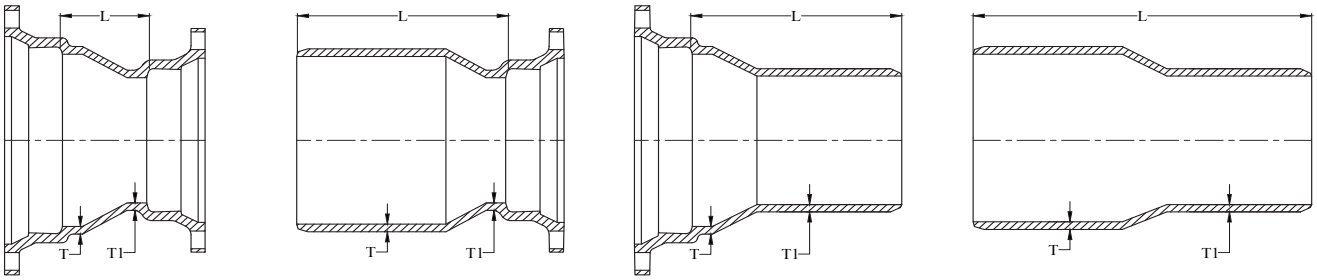

MJxMJ											PExMJ-SEB										MJ-LEBxPE										PExPE			
Domestic																					Import													
Size			MJ	SEB	LEB	PE	Weight						MJ	SEB	LEB	PE	Weight						MJ	SEB	LEB	PE	Weight			
	T	T1	L	L	L	L	MJ	SEB	LEB	PE	T	T1	L	L	L	L	MJ	SEB	LEB	PE	T	T1	L	L	L	L	MJ	SEB	LEB	PE
4x3	0.35	0.34	3.00	8.50	8.50	14.00	18	17	17	18	0.34	0.33	3.00	8.50	8.50	14.00	18	17	18	14
6x3	0.37	0.34	5.00	10.50	10.50	16.00	28	25	27	20	0.36	0.33	5.00	10.50	10.50	16.00	22	24	19	16
6x4	0.37	0.35	4.00	9.50	9.50	15.00	28	26	27	26	0.36	0.34	4.00	9.50	9.50	15.00	24	25	25	22
8x4	0.39	0.35	5.00	10.50	10.50	16.00	36	34	36	33	0.38	0.34	5.00	10.50	10.50	16.00	32	30	34	30
8x6	0.39	0.37	4.00	9.50	9.50	15.00	39	38	39	30	0.38	0.36	4.00	9.50	9.50	15.00	36	35	32	30
10x4	0.41	0.35	7.00	12.50	12.50	18.00	53	46	51	–	0.40	0.34	7.00	12.50	12.50	18.00	46	43	43	46
10x6	0.41	0.37	5.00	10.50	10.50	16.00	59	48	52	49	0.40	0.36	5.00	10.50	10.50	16.00	47	46	42	46
10x8	0.41	0.39	4.00	9.50	9.50	15.00	54	52	52	47	0.40	0.38	4.00	9.50	9.50	15.00	50	42	50	47
12x4	0.43	0.35	9.00	14.50	14.50	20.00	67	61	68	60	0.42	0.34	9.00	14.50	14.50	20.00	58	60	60	58
12x6	0.43	0.37	7.00	12.50	12.50	18.00	64	58	66	54	0.42	0.36	7.00	12.50	12.50	18.00	58	58	58	57
12x8	0.43	0.39	5.00	10.50	10.50	16.00	57	62	65	60	0.42	0.38	5.00	10.50	10.50	16.00	57	54	55	54
12x10	0.43	0.41	4.00	9.50	9.50	15.00	63	61	65	57	0.42	0.40	4.00	9.50	9.50	15.00	61	59	59	54
14x6	0.51	0.44	9.00	17.00	14.50	22.50	104	107	112	–	0.47	0.36	9.00	16.90	14.50	22.30	100	100	104	93
14x8	0.51	0.45	7.00	15.00	12.50	20.50	104	107	108	–	0.47	0.38	7.00	14.90	12.40	20.30	100	98	98	94
14x10	0.51	0.46	5.00	13.00	10.50	18.50	100	102	100	–	0.47	0.40	5.00	12.90	10.40	18.30	100	94	92	90
14x12	0.51	0.47	4.00	12.00	9.50	17.50	100	101	100	100	0.47	0.42	4.00	11.90	9.40	17.30	100	90	92	88
16x6	0.52	0.45	11.00	19.00	16.50	24.50	132	131	141	128	0.50	0.36	11.00	18.90	16.50	24.30	124	125	136	93
16x8	0.52	0.46	9.00	17.00	14.50	22.50	136	128	136	136	0.50	0.38	9.00	16.90	14.40	22.30	124	121	128	119
16x10	0.52	0.47	7.00	15.00	12.50	20.50	128	124	128	123	0.50	0.40	7.00	15.00	12.50	20.50	124	105	123	119
16x12	0.52	0.48	5.00	13.00	10.50	18.50	120	123	119	11	0.50	0.42	5.00	12.90	10.50	18.30	112	109	108	99
16x14	0.52	0.51	4.00	12.00	12.00	20.00	140	139	138	133	0.50	0.47	4.00	12.00	12.00	19.70	140	126	132	129
18x8	0.59	0.45	14.00	22.00	19.50	27.50	201	180	195	–	0.54	0.38	13.00	20.00	19.50	27.40	190	170	195	170
18x10	0.59	0.47	12.00	20.00	17.50	25.50	196	180	185	–	0.54	0.40	10.00	18.00	17.40	25.50	195	165	185	160
18x12	0.59	0.49	10.00	18.00	15.50	23.50	175	170	190	–	0.54	0.42	7.00	15.50	14.00	19.50	180	150	175	150
18x14	0.59	0.56	8.00	16.00	16.00	24.00	180	181	200	–	0.54	0.47	6.00	15.00	15.00	23.00	190	175	190	160
18x16	0.59	0.57	7.00	15.00	15.00	23.00	194	180	190	–	0.54	0.50	5.00	12.50	12.50	18.00	195	170	190	145
20x10	0.60	0.47	14.00	22.00	19.40	27.50	225	210	210	–	0.57	0.40	14.00	22.00	19.00	27.50	220	200	210	180
20x12	0.60	0.49	12.00	20.00	17.50	25.50	214	208	210	–	0.57	0.42	12.00	17.50	16.00	21.50	205	170	205	190
20x14	0.60	0.56	10.00	18.00	17.80	26.00	208	198	205	–	0.57	0.47	10.00	18.00	17.90	26.00	200	190	205	195
20x16	0.60	0.57	8.00	16.00	15.80	24.00	225	215	222	–	0.57	0.50	7.00	13.50	13.50	19.00	200	200	185	170
20x18	0.60	0.59	7.00	15.00	15.00	23.00	233	220	–	–	0.57	0.54	4.00	12.00	12.00	20.00	225	200	215	190
24x12	0.62	0.49	16.00	24.00	21.40	29.50	320	302	300	–	0.61	0.42	16.00	21.50	21.00	22.50	305	275	290	240
24x14	0.62	0.56	14.00	22.00	21.80	30.00	314	325	322	–	0.61	0.47	14.00	22.00	21.90	25.00	306	310	315	295
24x16	0.62	0.57	12.00	20.00	19.80	28.00	325	319	340	–	0.61	0.50	12.00	17.50	17.50	23.00	320	285	285	285
24x18	0.62	0.59	10.00	18.00	18.00	26.00	325	310	–	–	0.61	0.54	10.00	18.00	18.00	21.00	305	300	310	290
24x20	0.62	0.60	8.00	16.00	16.00	24.00	315	305	–	–	0.61	0.57	7.00	13.50	13.50	14.00	300	270	275	240
30x16	0.66	0.50	30.00	39.00	–	–	475	565	–	–	0.66	0.50	30.00	39.00	39.00	48.00	633	565	623	555
30x18	0.66	0.54	28.00	37.00	–	–	495	590	–	–	0.66	0.54	28.00	37.00	37.00	46.00	658	590	635	567
30x20	0.66	0.57	24.00	33.00	–	–	525	560	–	–	0.66	0.57	24.00	33.00	33.00	42.00	628	560	603	535
30x24	0.66	0.61	10.00	24.50	–	–	478	495	–	–	0.66	0.61	10.00	24.50	24.50	33.50	478	495	526	458
36x16	0.74	0.50	30.00	–	–	–	789	890	–	–	0.74	0.50	30.00	27.00	–	–	1016	595	–	–
36x20	0.74	0.57	36.00	45.00	–	–	970	874	–	–	0.74	0.57	36.00	45.00	45.00	54.00	975	874	950	849
36x24	0.74	0.61	19.00	33.00	–	–	770	746	–	–	0.74	0.61	19.00	33.00	33.00	42.00	770	746	810	709
36x30	0.74	0.66	15.50	24.50	–	–	838	725	–	–	0.74	0.66	15.50	24.50	24.50	725.00	650	33.5	758	657
42x30	0.82	0.74	20.00	–	–	–	1067	–	–	–	0.82	0.66	20.00	29.00	29.00	38.00	1083	931	1015	863
42x36	0.82	0.74	15.50	–	–	–	1116	–	–	–	0.82	0.74	15.50	24.50	24.50	33.50	1114	962	1013	861
48x30	0.90	0.66	40.00	–	–	–	1852	–	–	–	0.90	0.66	40.00	49.00	49.00	58.00	1779	1594	1711	1526
48x36	0.90	0.74	28.00	–	–	–	1632	–	–	–	0.90	0.74	28.00	37.00	37.00	46.00	1641	1456	1540	1355
48x42	0.90	0.82	15.50	–	–	–	1486	–	–	–	0.90	0.82	15.50	24.50	24.50	33.50	1426	1241	1274	1089

Tyler Union does not recommend the use of wedge action restraints on plain end fittings

C153 DUCTILE IRON COMPACT FITTINGS

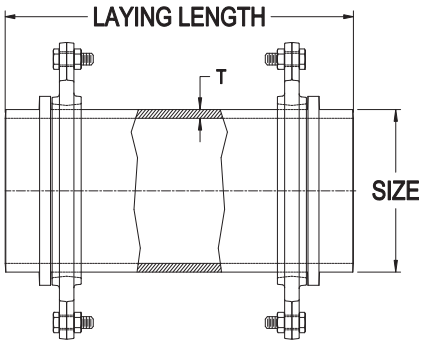

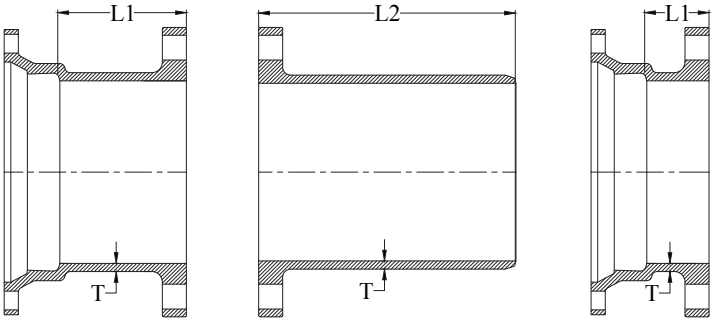

SWIVEL X SWIVEL ADAPTER		
Size by Laying Length	Wall Thickness	Weight
6x12	0.37	48
6x18	0.37	49
6x24	0.37	68

Adapter weights include swivel glands.

DOMESTIC MJxFE			FExPE		NON-DOMESTIC MJxFE	
Domestic				Weights	Import	Weight
Size	T	L1	L2	MJxFE	FExPE	L1	MJxFE
3	0.34	6.00	12.00	18	. . .		
4	0.35	6.00	12.00	26	23	3.50	24
6	0.37	6.00	12.00	36	35	3.50	37
8	0.39	6.00	12.00	55	43	3.50	51
10	0.41	6.00	12.00	69	59	3.50	70
12	0.43	6.00	12.00	88	88	3.50	101
14	0.51	6.00	12.00	127	–	6.00	128
16	0.52	6.00	12.00	161	149	6.00	158
18	0.56	6.00	–	173	–	6.00	176
20	0.60	6.00	–	275	–	6.00	267
24	0.62	6.00	–	271	–	6.00	288
30	0.66	7.00	–	514	–	7.00	557
36	0.74	8.00	–	770	–	8.00	798

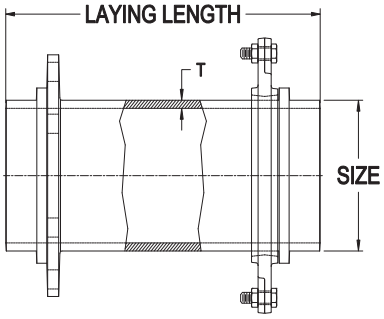

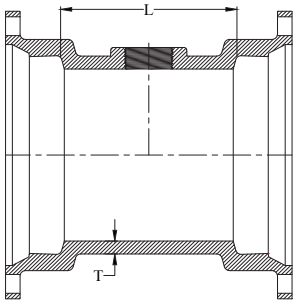

SWIVEL X SOLID ADAPTER WITH SWIVEL GLAND			
Size by Laying Length	Wall Thickness	Weight	
		Domestic	Import
6x13	0.37	46	51
6x18	0.37	64	61
6x24	0.37	75	74
8x12	0.39	63	67

Adapter weights include swivel glands.

MJ TAPPED TEE (2" TAP)					
Size	T	L	Max. Tap	Domestic	Import
3	0.34	6.00	2	22	20
4	0.35	6.00	2	30	24
6	0.37	6.00	2	44	35
8	0.39	6.00	2	50	54
10	0.41	6.00	2	92	68
12	0.43	6.00	2	165	83
16	0.52	6.00	2	177	162

C153 DUCTILE IRON COMPACT FITTINGS

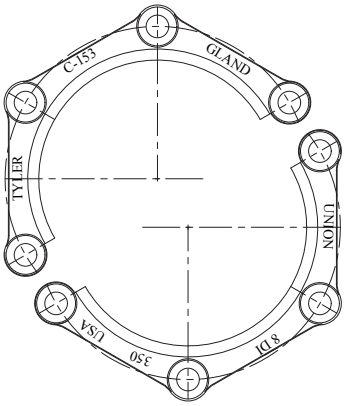

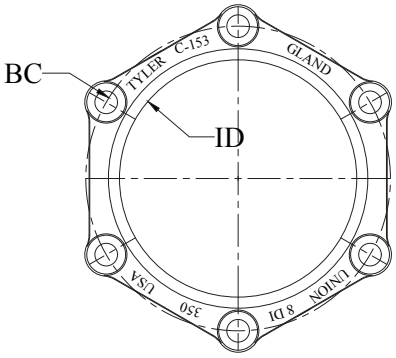

MJ COMPACT SPLIT REPAIR GLANDS			
Size	Inside Diameter (+.07-.03)	Bolt Circle (+-.06)	Weight (lbs.)
4	4.90	7.50	4
6	7.00	9.50	5
8	9.15	11.75	6
10	11.20	14.00	8
12	13.30	16.25	18

Split glands work with standard MJ gaskets and standard T-head bolts. Glands are shipped in halves and do not need separate bolts. T-head bolts alone hold the halves together.

MJ GLANDS			
Size	Weight	Size	Weight
3	3	18	22
4	4	20	32
6	5	24	37
8	6	30	85
10	9	36	115
12	10	42	180
14	17	48	275
16	21	–	–

MJ ACCESSORY KITS AND WEIGHTS						
Size	No.	Bolt Size	Bolt Length	Bolt Torque ft–lbs	Wt. of Gland, Bolt and Gasket	Pipe Barrel O.D.
3	4	5/8	3	45–60	4.4	3.96
4	4	3/4	3 1/2	75–90	6.9	4.8
6	6	3/4	3 1/2	75–90	9.8	6.9
8	6	3/4	4	75–90	11.3	9.05
10	8	3/4	4	75–90	15.6	11.1
12	8	3/4	4	75–90	17.3	13.2
14	10	3/4	4 1/2	75–90	26.5	15.3
16	12	3/4	4 1/2	75–90	31.9	17.4
18	12	3/4	4 1/2	75–90	36.2	19.5
20	14	3/4	4 1/2	75–90	42.2	21.6
24	16	3/4	5	75–90	54.2	25.8
30	20	1	6	100–120	224	32
36	24	1	6	100–120	179.7	38.3
42	28	1 1/4	6 1/2	120–150	382	44.5
48	32	1 1/4	6 1/2	120–150	463	50.8
54	36	1 1/4	6 1/2	120–150	–	57.56
60	36	1 1/4	6 1/2	120–150	–	61.61
64	38	1 1/4	6 1/2	120-150	–	65.67

C153 DUCTILE IRON COMPACT FITTINGS

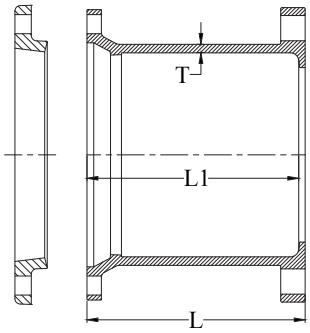

MJxFE Cutting-In Sleeve with Dual Purpose Accessories					
Size	For Pipe Size	L	L1	T	Shipping Wt. Assembled
4	4.80–5.00 O.D.	10.00	9.50	0.35	33
6	6.90–7.10 O.D.	10.00	9.50	0.37	50
8	9.05–9.30 O.D.	10.00	9.50	0.39	67
10	11.10–11.40 O.D.	10.00	9.50	0.41	122
12	13.20–13.50 O.D.	10.00	9.50	0.43	157

Flanged ends are faced and drilled per ANSI/AWWA C110/A21.10. Mechanical joint ends are designed to receive both standard and oversize gray or ductile iron pipe as shown above.

Typical Cutting-in Sleeve Installations

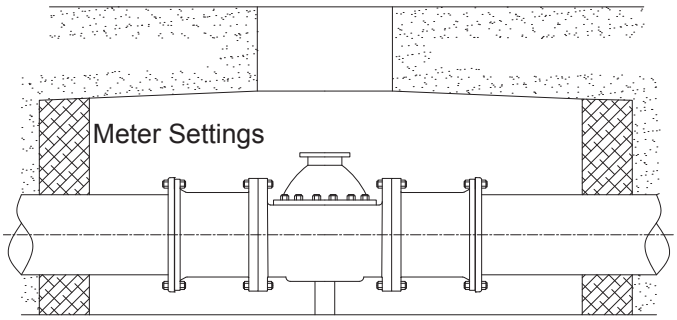

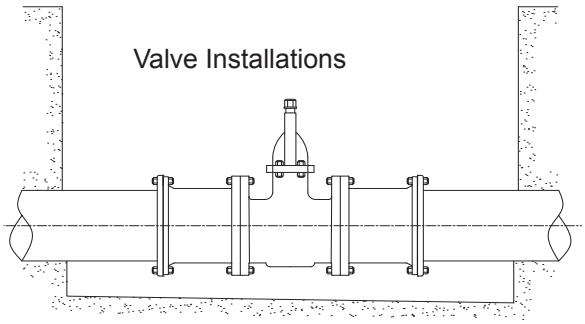

MJ Hydrant Bury

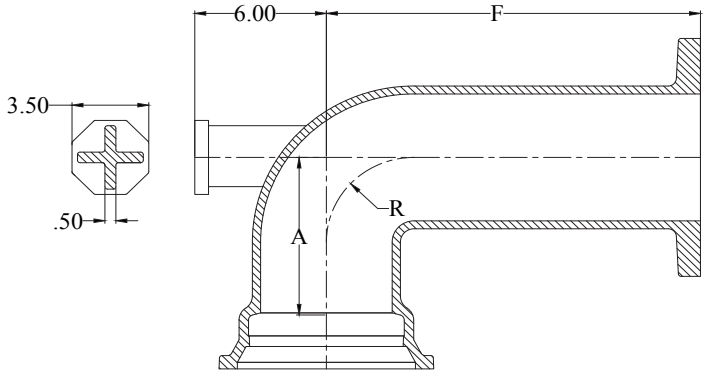

MJ HYDRANT BURY			
Size	A	F	R
6x30	7.50	30.00	4.00
6x36	7.50	36.00	4.00
6x42	7.50	42.00	4.00
6x48	7.50	48.00	4.00

Note: Please specify 8-bolt-hole flange or 6-bolt-hole flange upon order placement.

Compact MJ Fittings

ANSI/AWWA C153/A21.53

2" - 64" DUCTILE IRON MECHANICAL JOINT COMPACT FITTINGS

GENERAL SPECIFICATIONS

MATERIAL: Ductile Iron per ASTM A536

PRESSURE: 350 PSI rating for 3" - 24" sizes, 250 PSI rating for 30" - 48" sizes and 150 PSI rating for 54" - 60" sizes

TESTING: In accordance with ANSI/AWWA C153/A21.53 and UL requirements

LAYING LENGTH: In accordance with ANSI/AWWA C153/A21.53 (fittings not listed in ANSI/AWWA have dimensions per Star design as noted in the catalog)

WEIGHTS: Are in pounds, unless noted otherwise and do not include accessories, cement lining and coating

FLANGES: Flanged ends on fittings match ANSI/AWW C115/A21.15 and ANSI B16.1 class 125 flanges

CEMENT LINING: In accordance with ANSI/AWWA C104/A21.4 -- size 2" - 3" single thickness and sizes 4" - 64" double thickness

COATING: Asphaltic seal coat inside and out in accordance with ANSI/AWWA C104/A21.4

GASKETS: SBR in accordance with ANSI/AWWA C111/A21.11 (see pg. 17)

T-BOLTS/NUTS: Low alloy steel in accordance with ANSI/AWWA C111/A21.11 (see pg. 16)

APPROVALS: 4" - 12" Underwriters Laboratories Listed
3" and greater are UL/NSF-61

DIMENSIONS: All dimensions are in inches unless noted otherwise

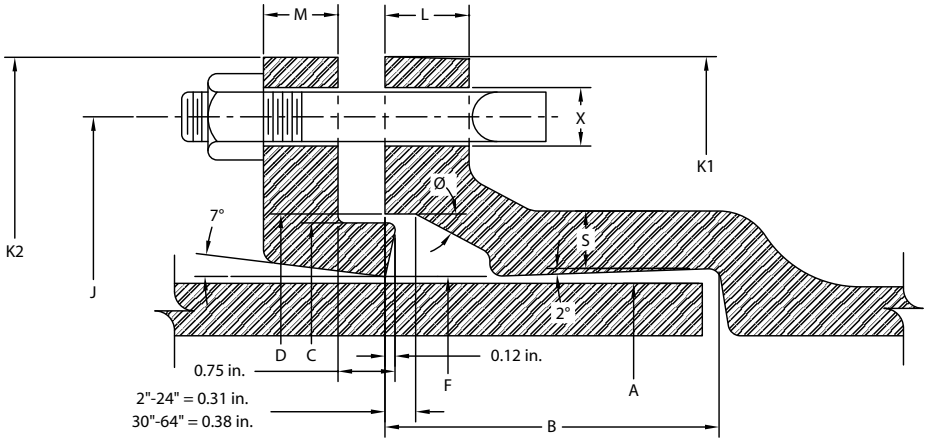

AWWA MEMBER

CLASSIFIED UL WATER QUALITY

MECHANICALJOINT DIMENSIONS

	NOM. SIZE	A DIA.	B	C DIA.	D DIA.	F DIA.	J DIA.	K1 DIA.	K2 DIA.	L	M	S	Ø	X DIA.	BOLTS SIZE	BOLTS NO.
★	2	2.50	2.50	3.39	3.50	2.61	4.75	6.19	6.25	0.58	0.62	0.36	28°	¾	⅝ x 3	2
	3	3.96	2.50	4.84	4.94	4.06	6.19	7.62	7.69	0.58	0.62	0.39	28°	¾	⅝ x 3	4
	4	4.80	2.50	5.92	6.02	4.90	7.50	9.06	9.12	0.60	0.75	0.39	28°	⅞	¾ x 3 ½	4
	6	6.90	2.50	8.02	8.12	7.00	9.50	11.06	11.12	0.63	0.88	0.43	28°	⅞	¾ x 3 ½	6
	8	9.05	2.50	10.17	10.27	9.15	11.75	13.31	13.37	0.66	1.00	0.45	28°	⅞	¾ x 3 ½	6
	10	11.10	2.50	12.22	12.34	11.20	14.00	15.62	15.62	0.70	1.00	0.47	28°	⅞	¾ x 4	8
	12	13.20	2.50	14.32	14.44	13.30	16.25	17.88	17.88	0.73	1.00	0.49	28°	⅞	¾ x 4	8
	14	15.30	3.50	16.40	16.54	15.44	18.75	20.25	20.25	0.79	1.25	0.55	28°	⅞	¾ x 4 ½	10
	16	17.40	3.50	18.50	18.64	17.54	21.00	22.50	22.50	0.85	1.31	0.58	28°	⅞	¾ x 4 ½	12
	18	19.50	3.50	20.60	20.74	19.64	23.25	24.75	24.83	1.00	1.38	0.68	28°	⅞	¾ x 4 ½	12
	20	21.60	3.50	22.70	22.84	21.74	25.50	27.00	27.08	1.02	1.44	0.69	28°	⅞	¾ x 4 ½	14
	24	25.80	3.50	26.90	27.04	25.94	30.00	31.50	31.58	1.02	1.56	0.75	28°	⅞	¾ x 5	16
	30	32.00	4.00	33.29	33.46	32.17	36.88	39.12	39.12	1.31	2.00	0.82	20°	1 ⅛	1 x 6	20
	36	38.30	4.00	39.59	39.76	38.47	43.75	46.00	46.00	1.45	2.00	1.00	20°	1 ⅛	1 x 6	24
	42	44.50	4.00	45.79	45.96	44.67	50.62	53.12	53.12	1.45	2.00	1.25	20°	1 ⅜	1 ¼ x 6 ½	28
	48	50.80	4.00	52.09	52.26	50.97	57.50	60.00	60.00	1.45	2.00	1.35	20°	1 ⅜	1 ¼ x 6 ½	32
★	54	*{ Dimensions Available On Request }*														
★	60															
★	64															

★Not Included in AWWA C153

FM Approvals
Quality System Registration
ISO 9001:2000

STAR® PIPE PRODUCTS

REV.07
® REGISTERED TRADEMARK OF STAR PIPE PRODUCTS

STAR® PIPE PRODUCTS
HOUSTON **CORPORATE** |TOLL FREE 1-800-999-3009 |FAX 281-558-9000
www.starpipeproducts.com

C110 DUCTILE IRON FULL BODY FITTINGS

SAMPLE SPECIFICATIONS

(Current ANSI/AWWA revisions apply)

Mechanical joint watermain fittings with accessories 2" through 48" shall be manufactured from ductile iron in accordance with and meet all applicable terms and provisions of standards ANSI/AWWA C110/A21.10 and ANSI/AWWA C111/A21.11. Ductile iron mechanical joint fittings 2" through 24" shall be rated for 350 psi working pressure. All ductile iron mechanical joint fittings 30" through 48" shall be rated for 250 psi working pressure. Flanged ductile iron fittings in 24" (610 mm) and smaller sizes may be rated for 350 psi (2,413 kPa) with the use of special (annular ring or comparable) gaskets.

NOTE: EXCEPTIONS: Mechanical joint fittings with flanged branches and 14" and larger caps and plugs are rated for water pressure of 250 PSI.

NOTE: Installation per AWWA C600 and AWWA C651, current revision.

NOTE: Fittings are cement lined and seal coated in accordance with ANSI/AWWA C104/A21.4. Fittings are also available double cement lined, bare or epoxy coated. Coated and lined fittings meet requirements of NSF-61, NSF-372 & Annex G.

Nominal Joint Dimensions in Inches															
Size	A	B	C	D	F	ø	X	J	K1	K2	L	M	N	O	S
*2	2.50	2.50	3.39	3.50	2.61	28°	3/4	4.75	6.25	6.25	0.75	0.62	1.12	0.31	0.44
3	3.96	2.50	4.84	4.94	4.06	28°	3/4	6.19	7.69	7.69	0.94	0.62	1.37	0.31	0.52
4	4.80	2.50	5.92	6.02	4.90	28°	7/8	7.50	9.12	9.12	1.00	0.75	1.50	0.31	0.65
6	6.90	2.50	8.02	8.12	7.00	28°	7/8	9.50	11.12	11.12	1.06	0.88	1.63	0.31	0.70
8	9.05	2.50	10.17	10.27	9.15	28°	7/8	11.75	13.37	13.37	1.12	1.00	1.75	0.31	0.75
10	11.10	2.50	12.22	12.34	11.20	28°	7/8	14.00	15.69	15.62	1.19	1.00	1.75	0.31	0.80
12	13.20	2.50	14.32	14.44	13.30	28°	7/8	16.25	17.94	17.88	1.25	1.00	1.75	0.31	0.85
14	15.30	3.50	16.40	16.54	15.44	28°	7/8	18.75	20.31	20.25	1.31	1.25	2.00	0.31	0.89
16	17.40	3.50	18.50	18.64	17.54	28°	7/8	21.00	22.56	22.50	1.38	1.31	2.06	0.31	0.97
18	19.50	3.50	20.60	20.74	19.64	28°	7/8	23.25	24.83	24.75	1.44	1.38	2.13	0.31	1.05
20	21.60	3.50	22.70	22.84	21.74	28°	7/8	25.50	27.08	27.00	1.50	1.44	2.19	0.31	1.12
24	25.80	3.50	26.90	27.04	25.94	28°	7/8	30.00	31.58	31.50	1.62	1.56	2.31	0.31	1.22
30	32.00	4.00	33.29	33.46	32.17	20°	1 1/8	36.88	39.12	39.12	1.81	2.00	2.75	0.38	1.50
36	38.30	4.00	39.59	39.76	38.47	20°	1 1/8	43.75	46.00	46.00	2.00	2.00	2.75	0.38	1.80
42	44.50	4.00	45.79	45.96	44.67	20°	1 3/8	50.62	53.12	53.12	2.00	2.00	2.75	0.38	1.95
48	50.80	4.00	52.09	52.26	50.97	20°	1 3/8	57.50	60.00	60.00	2.00	2.00	2.75	0.38	2.20

*Not included in AWWA C110.

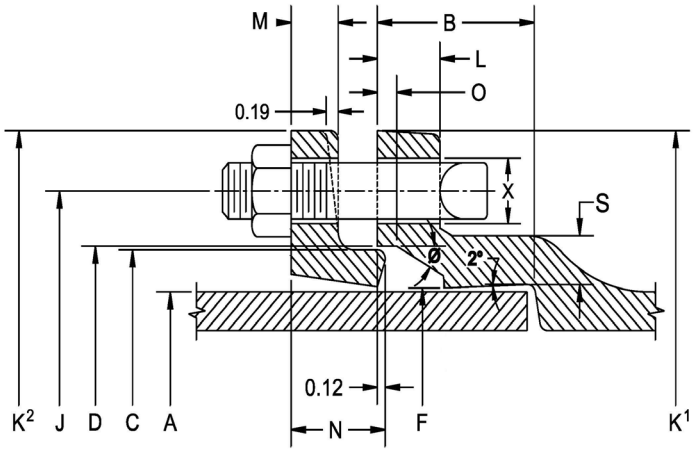

ANSI/AWWA C110 Mechanical Joint Fittings

C110 DUCTILE IRON FULL BODY FITTINGS

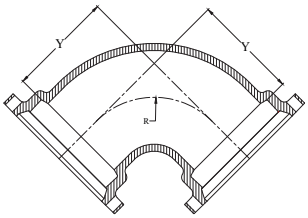

90° (1/4) MJ

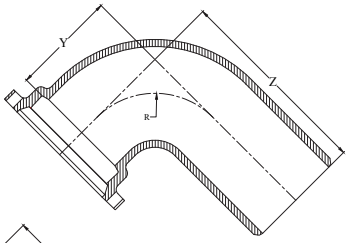

90° (1/4) MJxPE

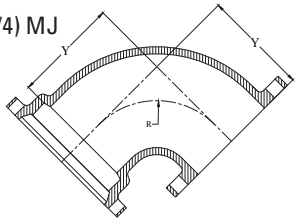

90° (1/4) MJxFE

90° (1/4) BENDS								
Domestic							Import	
Size	R	Y	Z	Weight			Weight	
				MJxMJ	MJxPE	MJxFE	MJ	MJxPE
*2	2.30	3.30	–	16	–	–	–	–
3	4.00	5.50	13.50	26	36	–	35	35
4	4.50	6.50	14.50	56	53	47	55	50
6	6.00	8.00	16.00	88	80	75	88	97
8	7.00	9.00	17.00	123	119	118	136	153
10	9.00	11.00	19.00	182	181	170	190	190
12	10.00	12.00	20.00	280	252	246	255	255
14	11.50	14.00	22.00	380	–	–	400	–
16	12.50	15.00	23.00	552	–	465	480	410
18	14.00	16.50	24.50	625	600	591	641	577
20	15.50	18.00	26.00	862	775	–	725	650
24	18.50	22.00	30.00	1423	1301	1150	1020	985
30	21.50	25.00	33.00	1942	1920	–	1843	1585
36	24.50	28.00	36.00	2629	2310	–	2513	2310
42	27.50	31.00	–	3410	–	–	3410	–
48	30.50	34.00	–	4595	–	–	4595	–

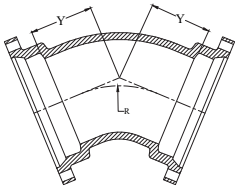

45° (1/8) MJ

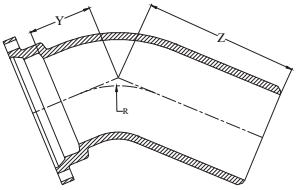

45° (1/8) MJxPE

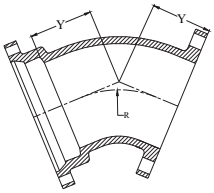

45° (1/8) MJxFE

45° (1/8) BENDS								
Domestic							Import	
Size	R	Y	Z	Weight			Weight	
				MJ	MJXFE	MJXPE	MJ	MJxPE
*2	1.96	1.80	–	12	–	–	–	–
3	3.62	3.00	11.00	30	–	–	30	30
4	4.81	4.00	12.00	53	48	45	49	48
6	7.25	5.00	13.00	77	60	69	77	81
8	8.44	5.50	13.50	110	107	111	117	123
10	10.88	6.50	14.50	156	148	167	155	168
12	13.25	7.50	15.50	214	215	196	223	215
14	12.06	7.50	15.50	300	–	–	270	–
16	13.25	8.00	16.00	391	–	349	335	320
18	14.50	8.50	16.50	527	416	455	467	395
20	16.88	9.50	17.50	631	543	537	527	500
24	18.12	11.00	19.00	880	1099	825	754	715
30	27.75	15.00	23.00	1898	–	1510	1451	1275
36	35.00	18.00	26.00	2372	–	1930	2176	1930
42	42.25	21.00	–	3020	–	–	2955	–
48	49.50	24.00	–	4170	–	–	4080	–

*Not included in ASSA C110.

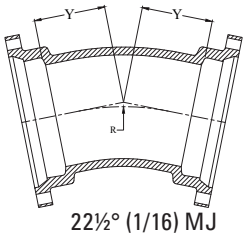

22½° (1/16) MJ

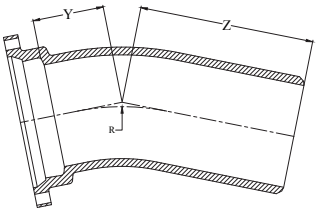

22½° (1/16) MJxPE

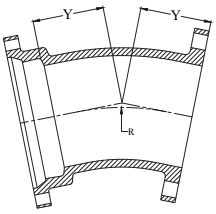

22½° (1/16) MJxFE

22 1/2° (1/16) BENDS								
Domestic							Import	
Size	R	Y	Z	Weight			Weight	
				MJ	MJXFE*	MJXPE	MJ	MJxPE
3	7.56	3.00	11.00	30	–	–	30	–
4	10.06	4.00	12.00	52	–	–	51	45
6	15.06	5.00	13.00	77	71	70	75	70
8	17.62	5.50	13.50	110	107	163	108	108
10	22.62	6.50	14.50	156	155	163	159	160
12	27.62	7.50	15.50	214	215	212	199	220
14	25.12	7.50	15.50	300	–	–	275	–
16	27.62	8.00	16.00	391	344	334	318	325
18	30.19	8.50	16.50	527	422	423	430	405
20	35.19	9.50	17.50	631	–	575	545	505
24	37.69	11.00	19.00	880	800	930	758	725
30	57.81	15.00	23.00	1898	–	1540	1400	1400
36	72.88	18.00	26.00	2372	–	1970	2121	1970
42	88.00	21.00	–	3020	–	–	3020	–
48	103.06	24.00	–	4170	–	–	4170	–

Tyler Union does not recommend the use of wedge action restraints on plain end fittings

C110 DUCTILE IRON FULL BODY FITTINGS

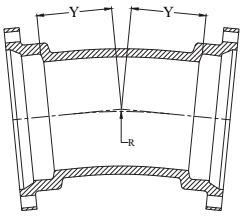

11¼° (1/32) MJ

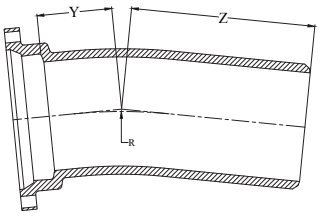

11¼° (1/32) MJxPE

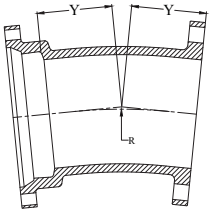

11¼° (1/32) MJxFE

11 1/4° (1/32) BENDS

Domestic							Import	
Size	R	Y	Z	Weight			Weight	
				MJ	MJxFE	MJxPE	MJ	MJxPE
3	15.25	3.00	11.00	30	–	–	29	–
4	20.31	4.00	12.00	52	–	45	51	–
6	30.50	5.00	13.00	65	71	70	75	–
8	35.50	5.50	13.50	104	105	105	108	105
10	45.69	6.50	14.50	171	–	–	160	–
12	55.81	7.50	15.50	221	215	–	220	–
14	50.75	7.50	15.50	305	---	–	275	–
16	55.81	8.00	16.00	405	345	–	345	–
18	60.94	8.50	16.50	525	422	–	450	–
20	71.06	9.50	17.50	644	–	–	540	–
24	76.12	11.00	19.00	996	800	972	762	730
30	116.75	15.00	23.00	1410	–	1305	1407	1305
36	147.25	18.00	26.00	2397	–	2185	2161	1980
42	177.69	21.00	–	3035	–	–	3740	–
48	208.12	24.00	–	4190	–	–	4190	–

90° (1/4) SWIVEL X SWIVEL BENDS

Size	Wall Thickness	A	B	C	D	E	F	R	*Weight
6	0.55	10.50	15.50	7.10	11.12	6.90	8.02	6.00	106
8	0.60	11.50	16.50	9.20	13.37	9.05	10.17	7.00	156

NOTE: Includes 2 swivel glands.
*Not included in AWWA C110.

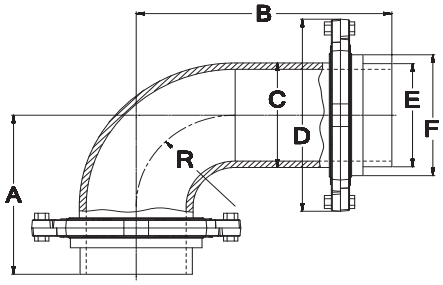

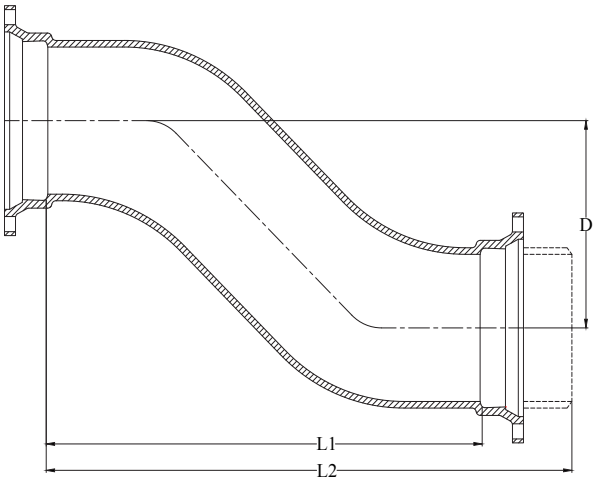

OFFSETS

Size	D	L	L2	Weight	
				MJ X MJ	MJ X PE
4	6.00	19.00	27.00	–	82
4	12.00	22.00	30.00	85	80
4	18.00	30.00	38.00	105	–
4	24.00	26.00	34.00	126	125
6	6.00	20.00	28.00	114	105
6	12.00	26.00	34.00	148	143
6	18.00	33.00	41.00	188	176
6	24.00	24.00	32.00	182	160
8	6.00	21.00	29.00	177	155
8	12.00	28.00	36.00	231	195
8	18.00	35.00	43.00	287	282
8	24.00	36.00	44.00	280	285
10	12.00	30.00	38.00	347	280
10	18.00	38.00	46.00	340	340
10	24.00	38.00	46.00	420	–
12	12.00	37.00	45.00	420	420
12	18.00	48.00	56.00	520	520
12	24.00	48.00	56.00	649	630
16	12.00	40.00	48.00	715	–
16	18.00	50.00	58.00	850	830
20	12.00	40.00	48.00	1025	–
20	18.00	48.00	60.00	1362	–

Tyler Union does not recommend the use of wedge action restraints on plain end fittings

C110 DUCTILE IRON FULL BODY FITTINGS

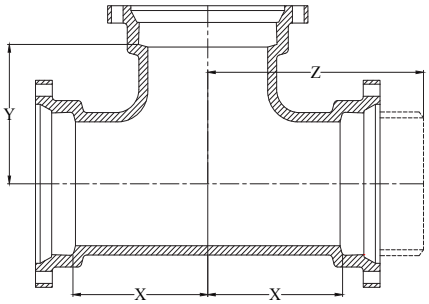

MJ Tees and MJxPExMJ Tees

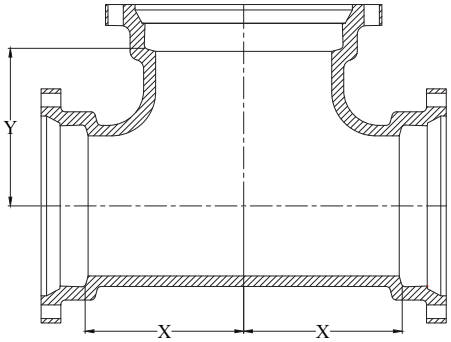

MJ Bullhead Tees

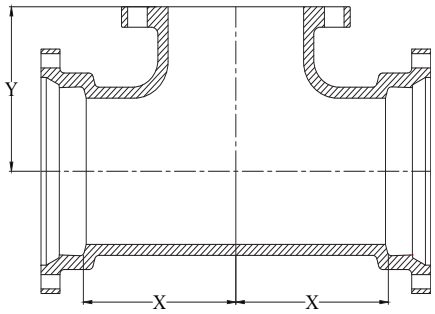

MJxFE Tees

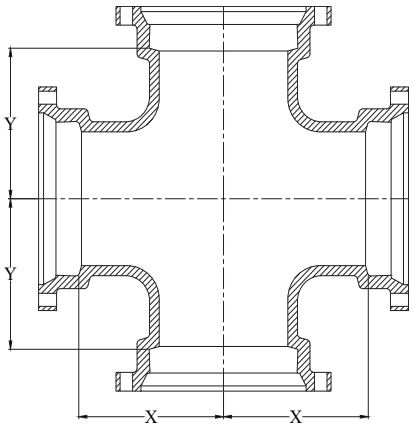

Cross

TEES AND CROSSES

Size Run	Branch	X	Y	Z	MJ	Weight		
						MJXPEXMJ	MJXMJXFE	Cross
2	2	3.25	3.25	–	21	–	–	–
3	2	3.25	3.25	–	45	–	–	–
3	3	5.50	5.50	13.50	58	–	–	–
4	2	4.80	4.80	14.50	68	–	49	–
4	3	6.50	6.50	14.50	77	–	–	–
4	4	6.50	6.50	14.50	78	75	76	–
4	6	8.00	8.00	–	112	–	–	–
6	2	8.00	8.00	–	78	–	–	–
6	3	8.00	8.00	16.00	98	–	–	–
6	4	8.00	8.00	16.00	110	–	109	–
6	6	8.00	8.00	16.00	119	120	141	160
6	8	9.00	9.00	–	158	–	–	–
8	3	9.00	9.00	17.00	155	–	–	–
8	4	9.00	9.00	17.00	157	–	150	185
8	6	9.00	9.00	17.00	175	170	182	205
8	8	9.00	9.00	17.00	199	180	194	255
10	4	11.00	11.00	19.00	–	–	229	–
10	6	11.00	11.00	19.00	258	–	264	285
10	8	11.00	11.00	19.00	268	–	245	310
10	10	11.00	11.00	19.00	300	250	–	380
12	4	12.00	12.00	20.00	318	315	323	–
12	6	12.00	12.00	20.00	325	325	335	360
12	8	12.00	12.00	20.00	335	335	372	371
12	10	12.00	12.00	20.00	392	390	–	486
12	12	12.00	12.00	20.00	396	396	476	–
14	12	14.00	14.00	22.00	540	560	–	–
14	14	14.00	14.00	22.00	585	570	–	779
16	4	15.00	15.00	23.00	580	580	575	–
16	6	15.00	15.00	23.00	615	590	605	650
16	8	15.00	15.00	23.00	625	605	615	675
16	10	15.00	15.00	23.00	645	620	–	–
16	12	15.00	15.00	23.00	627	640	651	–
16	16	15.00	15.00	23.00	740	720	730	895
18	6	13.00	15.50	–	710	–	707	–
18	8	13.00	15.50	–	659	–	675	775
18	12	13.00	15.50	–	749	–	733	860
18	18	16.50	16.50	–	945	–	953	1140
20	6	14.00	17.00	–	849	–	–	–
20	8	14.00	17.00	–	892	–	859	951
20	12	14.00	17.00	–	896	–	–	977
20	16	18.00	18.00	–	1095	–	–	1245
20	20	18.00	18.00	–	1258	–	1168	1440
24	6	15.00	19.00	–	1233	–	1228	–
24	8	15.00	19.00	–	1234	–	1242	1244
24	12	15.00	19.00	–	1256	–	1165	1326
24	14	15.00	19.00	–	1220	–	–	–
24	16	15.00	19.00	–	1245	–	–	1479
24	18	22.00	22.00	–	1735	–	–	–
24	20	22.00	22.00	–	1720	–	1795	1965
24	24	22.00	22.00	–	1947	–	–	2192
30	6	18.00	23.00	–	2050	–	–	2085
30	8	18.00	23.00	–	2060	–	–	–
30	10	18.00	23.00	–	2075	–	–	–
30	12	18.00	23.00	–	2090	–	–	2165
30	16	18.00	23.00	–	2145	–	–	–
30	18	18.00	23.00	–	2170	–	–	–
30	20	18.00	23.00	–	2205	–	–	–
30	24	25.00	25.00	–	2880	–	3080	3180
30	30	25.00	25.00	–	2275	–	2430	3640

Tyler Union does not recommend the use of wedge action restraints on plain end fittings

C110 DUCTILE IRON FULL BODY FITTINGS

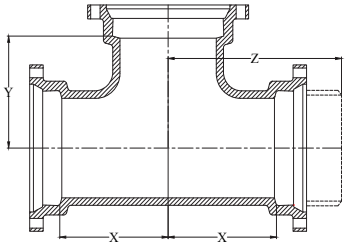

MJ Tees AND MJxPExMJ Tees

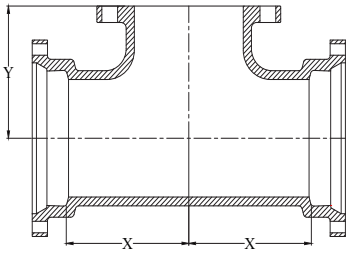

MJxFE Tees

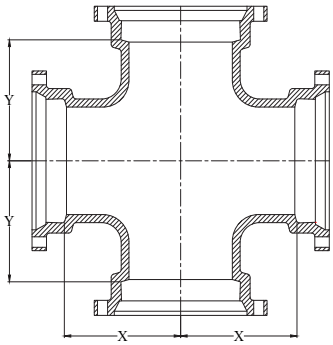

Cross

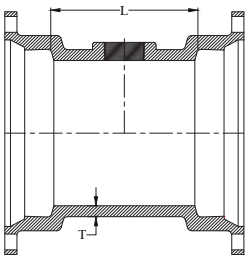

MJ Tapped Tees (2" TAP)

TEES AND CROSSES (Continued)								
Size Run	Branch	X	Y	Z	MJ	Weight		
						MJXPEXMJ	MJXMJXFE	Cross
36	6	20.00	26.00	–	2439	–	–	–
36	8	20.00	26.00	–	2444	–	–	–
36	10	20.00	26.00	–	2535	–	2550	–
36	12	20.00	26.00	–	2541	–	–	–
36	14	20.00	26.00	–	2570	–	2450	–
36	16	20.00	26.00	–	2585	–	–	4370
36	18	20.00	26.00	–	2610	–	–	3420
36	20	20.00	26.00	–	2635	–	2660	3455
36	24	20.00	26.00	–	2792	–	–	3495
36	30	28.00	28.00	–	3545	–	–	3535
36	36	28.00	28.00	–	3450	–	–	3590
42	12	23.00	30.00	–	3555	–	–	3690
42	14	23.00	30.00	–	3575	–	–	4815
42	16	23.00	30.00	–	3595	–	–	6430
42	18	23.00	30.00	–	3615	–	–	6920
42	20	23.00	30.00	–	3640	–	–	4665
42	24	23.00	30.00	–	3690	–	–	4695
42	30	31.00	31.00	–	4650	–	–	4735
42	36	31.00	31.00	–	4880	–	–	4775
42	42	31.00	31.00	–	6320	–	–	4825
48	12	26.00	34.00	–	4870	–	–	–
48	14	26.00	34.00	–	4885	–	–	–
48	16	26.00	34.00	–	4905	–	–	–
48	18	26.00	34.00	–	4925	–	–	–
48	20	26.00	34.00	–	4950	–	–	–
48	24	26.00	34.00	–	4995	–	–	4920
48	30	26.00	34.00	–	5140	–	–	5210
48	36	34.00	34.00	–	6280	–	–	6500
48	42	34.00	34.00	–	8130	–	–	8530
48	48	34.00	34.00	–	8420	–	–	9095

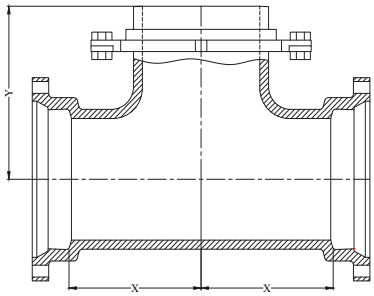

MJxMJxSwivel Tees

MJ TAPPED TEE (2" TAP)							
Domestic				Import			
size	L	Max.Tap	Weight	T	L	Max. Tap	Weight
3	8.00	2	40	0.33	6.00	2	18
4	8.00	2	51	0.34	6.00	2	24
6	8.00	2	73	0.36	6.00	2	42
8	8.00	2	104	0.38	6.00	2	52
10	8.00	2	130	0.40	6.00	2	64
12	8.00	2	180	0.42	6.00	2	81

Tyler Union does not recommend the use of wedge action restraints on plain end fittings

MJ X MJ X SWIVEL TEE			
Size	X	Y	Weight
6	8.00	10.50	150
8x6	9.00	11.50	199
8	9.00	11.50	210
10x6	11.00	13.50	267
12x6	12.00	14.50	346
16x6	15.00	17.50	619
16x8	15.00	17.50	649
30x6	18.00	24.50	2070

All weights shown include the swivel gland.

C110 DUCTILE IRON FULL BODY FITTINGS

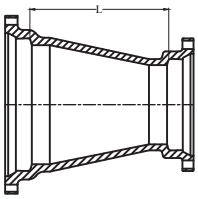

MJ x MJ

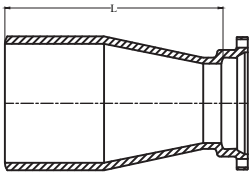

PE x MJ-SEB

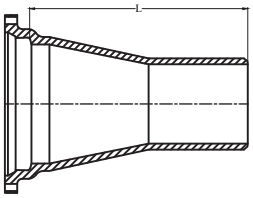

MJ-LEB x PE

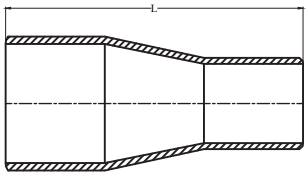

PE x PE

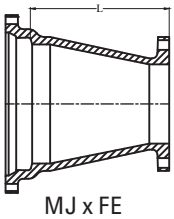

MJ x FE

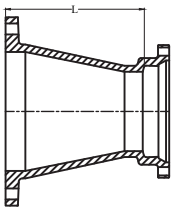

FE x MJ

REDUCERS												
	Laying Length (L)						Weight					
Size	MJ	SEB	MJ-LEB	PE x PE	FE x MJ	MJ x FE	MJ	MJ-SEB	MJ-LEB	PE x PE	FE x MJ	MJ x FE
* 3x2	6	14	14	–	–	–	24	24	24	–	–	–
* 4x2	7	15	15	–	–	–	31	30	31	–	–	–
4x3	7	15	15	23	7	7	37	38	37	34	34	35
* 6x2	9	17	17	–	–	–	46	43	47	–	–	–
6x3	9	17	17	25	–	9	55	50	55	–	–	50
6x4	9	17	17	25	9	9	56	60	59	57	53	62
8x3	11	19	19	27	–	–	84	77	70	–	–	–
8x4	11	19	19	27	11	11	84	82	84	–	73	75
8x6	11	19	19	27	11	11	94	90	93	96	84	80
10x6	12	20	20	28	12	12	115	116	117	–	100	105
10x8	12	20	20	28	12	12	142	135	130	135	130	130
12x4	14	22	22	30	–	–	139	131	–	–	–	–
12x6	14	22	22	30	14	12	148	150	153	...	145	130
12x8	14	22	22	30	14	12	173	168	165	168	170	175
12x10	14	22	22	30	14	12	194	190	178	185	188	190
14x6	16	24	24	32	–	16	–	–	–	–	–	195
14x8	16	24	24	32	–	16	–	–	–	–	–	215
14x12	16	24	24	32	–	16	–	–	–	–	–	270
16x6	18	26	26	34	–	–	250	...	–	–	–	–
16x8	18	26	26	34	–	–	288	248	–	–	–	–
16x10	18	26	26	34	–	–	300	...	–	–	–	–
16x12	18	26	26	34	18	18	330	304	325	–	305	325
16x14	18	26	26	34	–	–	370	–	–	–	–	–
18x8	19	27	27	35	–	19	320	–	–	–	–	300
18x10	19	27	27	35	–	–	388	–	–	–	–	–
18x12	19	27	27	35	–	19	380	355	–	–	–	405
18x14	19	27	27	35	–	–	450	...	–	–	–	–
18x16	19	27	27	35	–	19	476	...	–	–	–	445
20x10	20	28	28	36	–	–	410	...	–	–	–	–
20x12	20	28	28	36	–	–	515	420	–	–	–	–
20x16	20	28	28	36	–	20	578	525	510	–	–	510
20x18	20	28	28	36	–	...	575	...	–	–	–	–
24x12	24	32	32	40	–	24	610	570	–	–	–	455
24x16	24	32	32	40	–	–	705	665	753	–	–	–
24x18	24	32	32	40	–	–	789	720	–	–	–	–
24x20	24	32	32	40	–	–	815	775	804	–	–	–
*30x16	30	38	38	46	–	–	1150	1040	–	1015	–	–
30x18	30	38	38	46	–	–	1160	1050	–	1025	–	–
30x20	30	38	38	46	–	–	1225	1120	–	1090	–	–
30x24	30	38	38	46	–	–	1360	1255	1320	1215	–	–
36x20	36	44	44	52	–	–	1495	–	1466	–	–	–
36x24	36	44	44	52	–	–	1580	–	1535	1389	–	–
36x30	36	44	44	52	–	–	1919	1721	...	1585	–	–
42x24	42	50	50	58	–	–	2060	–	–	–	–	–
42x30	42	50	50	58	–	–	2370	–	–	–	–	–
42x36	42	50	50	58	–	–	2695	–	–	–	–	–
48x30	48	56	56	64	–	–	3005	–	–	–	–	–
48x36	48	56	56	64	–	–	3370	–	–	–	–	–
48x42	48	56	56	64	–	–	3750	–	–	–	–	–

Tyler Union does not recommend the use of wedge action restraints on plain end fittings

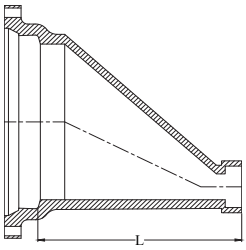

MJxFIPT Eccentric Reducer		
Size	L	Weight
6x2	13	51
8x2	15	71

TYLER UNION®
Quality Waterworks Products

C110 DUCTILE IRON FULL BODY FITTINGS

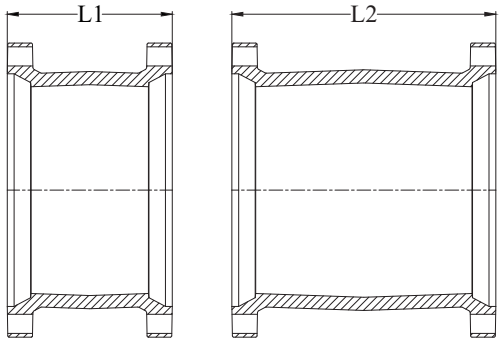

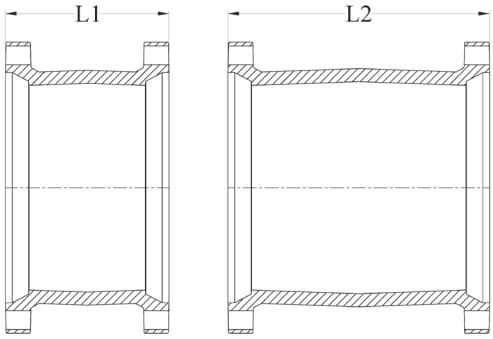

SOLID SLEEVES					
Size	Pipe O.D.	L1	Weight	L2	Weight
*2	2.50	8.00	13	12.00	18
3	4.00	7.50	25	12.00	36
4	4.80	7.50	35	12.00	47
6	6.90	7.50	45	12.00	65
8	9.10	7.50	65	12.00	90
10	11.10	7.50	85	12.00	108
12	13.20	7.50	120	12.00	136
16	17.40	9.50	206	15.00	289
18	19.50	9.50	246	15.00	282
20	21.60	9.50	275	15.00	336
24	25.80	9.50	360	15.00	459
30	32.00	15.00	745	24.00	1220
36	38.30	15.00	1047	24.00	1502
42	44.50	15.00	1312	24.00	1550
48	50.80	15.00	1585	24.00	1940

*DUO PURPOSE SLEEVE					
Size	Pipe O.D.	L1	Weight	L2	Weight
4	4.80/5.00	7.50	33	12.00	44
6	6.90/7.10	7.50	46	12.00	67
8	9.05/9.30	7.50	65	12.00	88
10	11.10/11.40	–	–	12.00	111
†12	13.20/13.50	–	–	12.00	221
†16	17.40/17.80	–	–	15.00	385

All sizes use MJ DUO purpose Gland.
* Not included in AWWA C110.
† 12" and 16" are sold assembled.
NOTE: Sizes 4"–10" Use standard MJ Gasket;
12" and 16" require special gaskets.

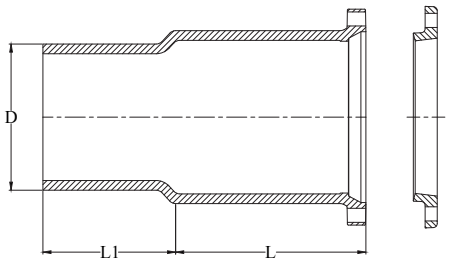

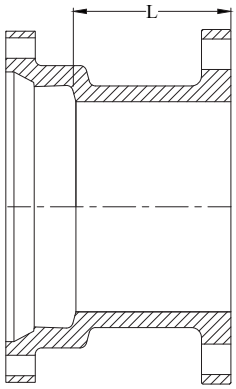

* MJ x PE DUAL-PURPOSE CUTTING-IN SLEEVE						
Size	For use on pipe OD	L	L1	D	Gland only	Gland and sleeve
4	4.80–5.00	12.00	8.00	4.80	6.0	72
6	6.90–7.10	12.00	8.00	6.90	10.0	94
8	9.05–9.30	12.00	8.00	9.05	16.0	122
10	11.10–11.40	12.00	8.00	11.10	25.0	175
12	13.20–13.50	12.00	8.00	13.20	30.0	235

Tyler Union does not recommend the use of wedge action restraints on plain end fittings

ADAPTERS MJxFE		
Size	L	Weight
3	8.00	30
4	8.00	42
6	8.00	57
8	8.00	88
10	8.00	120
12	8.00	150
16	8.00	257
18	8.00	304
20	8.00	372
24	8.00	488
30	10.00	682
36	10.00	1070

C110 DUCTILE IRON FULL BODY FITTINGS

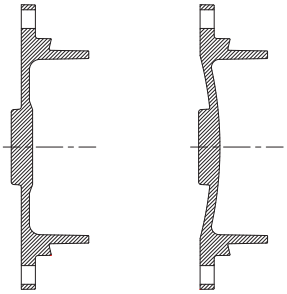

2″–16″ 18″–48″

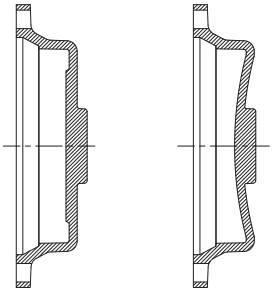

2″–16″ 18″–48″

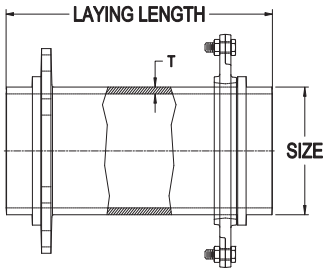

PLUGS	
Size	Weight
*2	5
3	9
4	13
6	15
8	45
10	66
12	79
14	120
16	147
†18	192
†20	220
†24	338
†30	660
†36	838
†42	1180
†48	1455

† Dished
* Not included in AWWA C110.
Note: Optional 2″ tap in the center.

CAPS	
Size	Weight
*2	6
3	10
4	18
6	34
8	46
10	58
12	86
16	178
†18	215
†20	250
†24	370
†30	680
†36	850
†42	1180
†48	1595

† Dished
* Not included in AWWA C110.
Note: Optional 2″ tap in the center.

SWIVEL x SOLID ADAPTER		
Size X Laying Lenght	Pipe O.D.	L
4 X 13	0.52	42
6 X12	0.55	61
6 X 18	0.55	89
6 X 24	0.55	108
6 X 36	0.55	156
8 X 13	0.60	97
12 X 13	0.75	164

* Weights with Gland.

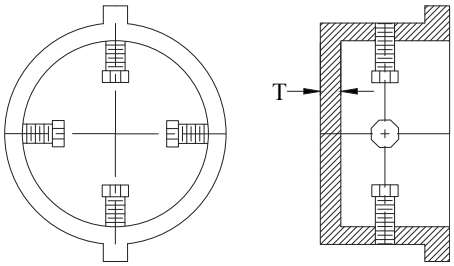

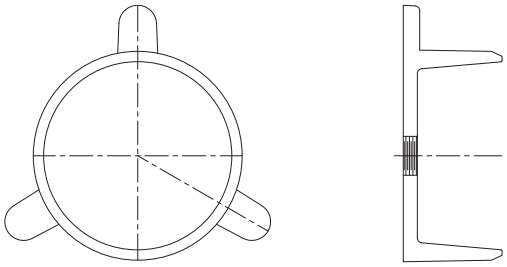

TYTON® PLUG** SOLID OR TAPPED			
Size	Tap	T	Weight**
4	2	0.60	18
6	2	0.65	25
8	2	0.70	46
10	2	0.75	70
12	2	0.75	95

*Weights do not include accessories.
** Not included in AWWA C110.
TYTON is a registered trademark of U.S Pipe and Foundry company.

PUSH-IN PLUG WITH EARS		
Size	Tap	Weight
14	2	101
16	2	137
18	2	177
†20	2	239
†24	2	311

† Dished – Not flat as shown.
NOTE: To be used with all push in pipe and fittings.
NOTE: Blocking still required ears for assembly only.

C110 DUCTILE IRON FULL BODY FITTINGS

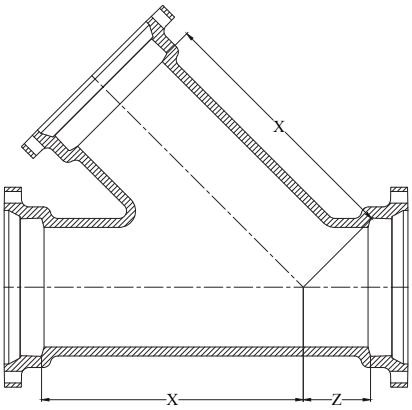

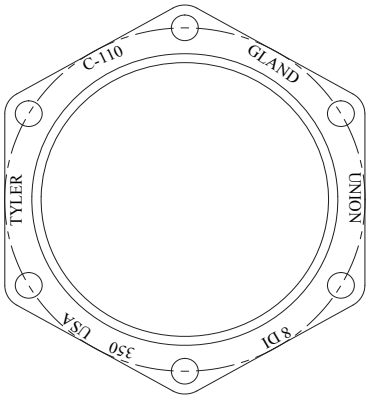

MJ GLANDS	
Size	Weight
2	3
3	4
4	6
6	10
8	16
10	19
12	26
14	34
16	54
18	52
20	73
24	91
30	90
36	127
42	279
48	341

WYES / LATERALS

Size		Dimensions		
Run	Branch	X	Z	Weight
3	3	10.00	3.00	60
4	4	12.00	3.00	90
6	4	14.50	3.50	130
6	6	14.50	3.50	145
8	4	17.50	4.50	190
8	6	17.50	4.50	205
8	8	17.50	4.50	230
10	6	20.50	5.00	330
10	8	20.50	5.00	310
10	10	20.50	5.50	435
12	8	24.50	5.50	505
12	12	24.50	5.50	490
14	6	27.00	6.00	626
16	16	30.00	6.50	1079
18	8	32.00	7.00	1073
18	10	32.00	7.00	975
18	12	32.00	7.00	1015
18	16	32.00	7.00	1135
18	18	32.00	7.00	1130
20	10	35.00	8.00	1220
20	12	35.00	8.00	1260
20	16	35.00	8.00	1375
20	20	35.00	8.00	1525
24	24	40.50	9.00	2372
30	30	49.00	10.00	3670
36	24	54.00	15.00	5390
36	36	60.00	19.50	6335
42	24	60.00	12.00	6810
42	30	63.00	12.00	7210
42	36	66.00	12.00	8355
42	42	71.00	15.00	9900
48	48	77.00	16.00	13150

* Not included in AWWA C-110.

MJ ACCESSORY KITS AND WEIGHTS

size	No.	Bolt Size	Bolt Length	Bolt Torque ft/lbs	Wt. of Gland, Bolts and Gasket	Pipe Barrel O.D.
*2	2	5/8	3	45–60	5	2.50
3	4	5/8	3	45–60	7	3.96
4	4	3/4	3 1/2	75–90	10	4.80
6	6	3/4	3 1/2	75–90	16	6.90
8	6	3/4	4	75–90	25	9.05
10	8	3/4	4	75–90	30	11.10
12	8	3/4	4	75–90	40	13.20
14	10	3/4	4 1/2	75–90	45	15.30
16	12	3/4	4 1/2	75–90	55	17.40
18	12	3/4	4 1/2	75–90	65	19.50
20	14	3/4	4 1/2	75–90	85	21.60
24	16	3/4	5	75–90	105	25.80
30	20	1	6	100–120	220	32.00
36	24	1	6	100–120	301	38.30
42	28	1 1/4	6 1/2	120–150	389	44.50
48	32	1 1/4	6 1/2	120–150	477	50.80

Full Body MJ Fittings

ANSI/AWWA C110/A21.10

2" - 54" DUCTILE IRON MECHANICAL JOINT FULL BODY FITTINGS

GENERAL SPECIFICATIONS

MATERIAL: Ductile iron per ASTM A536

PRESSURE: 350 PSI rating for 2" - 24" sizes, 250 PSI rating for 30' - 48" and 150 PSI for 54" or as noted

TESTING: In accordance with ANSI/AWWA C110/A21.10

LAYING LENGTH: In accordance with ANSI/AWWA C110/A21.10 (fittings not listed in ANSI/AWWA have dimensions per Star design as noted in the catalog)

WEIGHTS: Are in pounds, unless noted otherwise and do not include accessories, cement lining and coating

FLANGES: Flanged ends on fittings match ANSI/AWW C110/A21.10 and ANSI B16.1 class 125 flanges

CEMENT LINING: In accordance with ANSI/AWWA C104/A21.4 -- sizes 2" - 3" single thickness and sizes 4" - 54" double thickness

COATING: Asphaltic seal coat inside and out in accordance with ANSI/AWWA C104/A21.4

GASKETS: SBR in accordance with ANSI/AWWA C111/A21.11 (see pg. 17)

T-BOLTS/NUTS: Low alloy steel in accordance with ANSI/AWWA C11/A21.11 (see pg. 16)

APPROVALS: Sizes 3" and greater are UL/NSF-61

DIMENSIONS: All dimensions are in inches unless noted otherwise

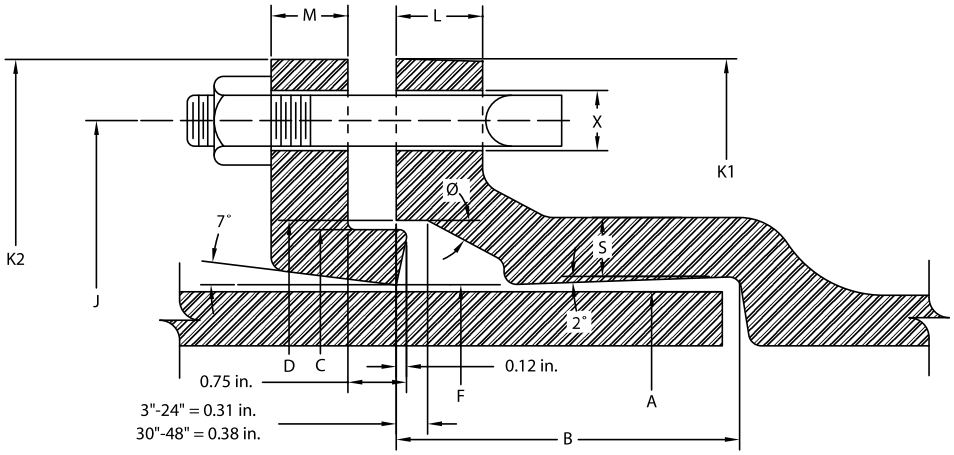

AWWA MEMBER

CLASSIFIED UL WATER QUALITY

MECHANICAL JOINT DIMENSIONS

NOM. SIZE	A DIA.	B	C DIA.	D DIA.	F DIA.	J DIA.	K1 DIA.	K2 DIA.	L	M	S	Ø	X DIA.	BOLTS SIZE	BOLTS NO.
★ 2	2.50	2.50	3.39	3.50	2.61	4.75	6.25	6.25	0.75	0.62	0.44	28°	¾	⅝ x 3	2
3	3.96	2.50	4.84	4.94	4.06	6.19	7.69	7.69	0.94	0.62	0.52	28°	¾	⅝ x 3	4
4	4.80	2.50	5.92	6.02	4.90	7.50	9.12	9.12	1.00	0.75	0.65	28°	⅞	¾ x 3 ½	4
6	6.90	2.50	8.02	8.12	7.00	9.50	11.12	11.12	1.06	0.88	0.70	28°	⅞	¾ x 3 ½	6
8	9.05	2.50	10.17	10.27	9.15	11.75	13.37	13.37	1.12	1.00	0.75	28°	⅞	¾ x 3 ½	6
10	11.10	2.50	12.22	12.34	11.20	14.00	15.69	15.62	1.19	1.00	0.80	28°	⅞	¾ x 4	8
12	13.20	2.50	14.32	14.44	13.30	16.25	17.94	17.88	1.25	1.00	0.85	28°	⅞	¾ x 4	8
14	15.30	3.50	16.40	16.54	15.44	18.75	20.31	20.25	1.31	1.25	0.89	28°	⅞	¾ x 4 ½	10
16	17.40	3.50	18.50	18.64	17.54	21.00	22.56	22.50	1.38	1.31	0.97	28°	⅞	¾ x 4 ½	12
18	19.50	3.50	20.60	20.74	19.64	23.25	24.83	24.75	1.44	1.38	1.05	28°	⅞	¾ x 4 ½	12
20	21.60	3.50	22.70	22.84	21.74	25.50	27.08	27.00	1.50	1.44	1.12	28°	⅞	¾ x 4 ½	14
24	25.80	3.50	26.90	27.04	25.94	30.00	31.58	31.50	1.62	1.56	1.22	28°	⅞	¾ x 5	16
30	32.00	4.00	33.29	33.46	32.17	36.88	39.12	39.12	1.81	2.00	1.50	20°	1 ⅛	1 x 6	20
36	38.30	4.00	39.59	39.76	38.47	43.75	46.00	46.00	2.00	2.00	1.80	20°	1 ⅛	1 x 6	24
42	44.50	4.00	45.79	45.96	44.67	50.62	53.12	53.12	2.00	2.00	1.95	20°	1 ⅜	1 ¼ x 6 ½	28
48	50.80	4.00	52.09	52.26	50.97	57.50	60.00	60.00	2.00	2.00	2.20	20°	1 ⅜	1 ¼ x 6 ½	32
★ 54	*{ Dimensions Available On Request }*														

★Not Included in AWWA C110

FM Approvals Quality System Registration ISO 9001:2000

STAR® PIPE PRODUCTS

REV.07

® REGISTERED TRADEMARK OF STAR PIPE PRODUCTS

STAR® PIPE PRODUCTS
HOUSTON **CORPORATE** |TOLL FREE 1-800-999-3009 |FAX 281-558-9000
www.starpipeproducts.com

AMERICAN Ductile Iron Flex-Ring® and Lok-Ring® Fittings

The principal standards covering fittings are ANSI/AWWA C110/A21.10 and ANSI/AWWA C153/A21.53. The principal standard covering joints is ANSI/AWWA C111/A21.11. These and other standards are referenced throughout this section by the full ANSI/AWWA designation or by only the AWWA numbering, such as AWWA C110 or C153.

AMERICAN furnishes a line of 4"–48" Flex-Ring and 54"–64" Lok-Ring fittings meeting the applicable requirements of AWWA C153. These fittings employ the standard Fastite or Fast-Grip gasket seal, and the joints meet the applicable requirements of AWWA C111. Many of these fittings are not specifically listed in the AWWA standards because of joints, outlets, or other variations and are designated as "AMERICAN standard."

When welded joint restraint is desired, Flex-Ring or Lok-Ring fittings should also be used, depending on size. These joints are also essentially boltless and use the standard Fastite gasket for joint sealing. In addition, field adaptable joint restraint is available for 14"-36" Flex-Ring pipe or Flex-Ring fittings by use of AMERICAN's Fast-Grip gaskets or Field Flex-Rings, respectively. See Section 9 for more information on Restrained Joints.

Flex-Ring and Lok-Ring fittings are normally furnished complete with standard Fastite plain rubber gaskets and a sufficient supply of Fastite joint lubricant. Restraining elements for Flex-Ring or Lok-Ring fittings may be shipped either with the fittings or joining pipe, dependent on joint type, fitting configuration, etc. See Section 9.

Flex-Ring and Lok-Ring fittings are furnished of ductile iron only. Fittings for pressure ratings of 250 and 350 psi are furnished as shown in the tables in this Section. Fittings for pressure ratings higher than shown are available for special applications.

Fittings are normally furnished with cement lining in accordance with AWWA C104 and with an outside asphaltic coating. They can also be furnished asphaltic coated or uncoated inside. For special conditions, other types of coatings and linings may be available. See Section 11.

AMERICAN Ductile Iron Flex-Ring® and Lok-Ring® Fittings

General Notes Relating to Flex-Ring and Lok-Ring Fittings

1. Fittings in the following tables with the heading "ANSI/AWWA C153/A21.53" are essentially as specified in that standard. Fittings in tables with the heading "AMERICAN Standard" are either not included in the ANSI/AWWA standard or vary therefrom in weights, dimensions, and/or joints.

2. Fittings are manufactured of ductile iron qualified as per grade 70-50-05 (minimum tensile strength: 70,000 psi; minimum yield strength: 50,000 psi; minimum elongation: 5%) as specified in AWWA C153.

3. Weights of accessories are not included in weights of fittings shown in tables unless specifically noted. For weights of accessories, see Section 2 or Section 9.

4. For allowable joint deflection of Flex-Ring and Lok-Ring fitting joints, see Table 4-3.

5. All pressure ratings are for water service.

6. Some fittings are available with body metal thickness and weights other than shown in the tables. Some fittings are available in different sizes and with different size combinations than shown. All sizes and body metal thicknesses listed may not be available due to equipment changes. Check AMERICAN regarding special requirements.

7. See Section 7 for AMERICAN Specials.

8. Fittings may be furnished by AMERICAN that are manufactured by others. Any such fittings will normally be manufactured in accordance with appropriate ANSI/AWWA standards.

9. The 250 psi rating for 54"–64" fittings is an AMERICAN standard, based on performance testing. 54"–64" fittings are rated only 150 psi in AWWA C153, although that standard provides for higher pressure ratings by the manufacturer (AMERICAN).

10. Center-to-socket dimensions, wall thicknesses, and weights may vary from those shown in the following tables depending on foundry practice.

11. The locations of taps, bases, or other special options when available on fittings shall be specified by the Purchaser as shown on page 6-5 for similar body type fittings. Likewise, end types and end sizes used in descriptions must be specified in numbering sequence shown on pages 6-5 and 6-6 and the illustrations in this section.

12. Lateral or wye branch fittings with Flex-Ring and Lok-Ring end connections are not shown in this section. For small-diameter varied angle lateral and tangential connections to larger mains, shop-welded outlet pipes are normally preferable and can be furnished with all joining connections as noted in Section 7. For larger or full-opening requirements, some 45° lateral and true wye configurations can also be furnished with these push-on end connections. (Contact AMERICAN for availability.) These wye fittings are special, and for economy and availability, alternative combinations of other standard fittings may be preferable in some cases. (See alternatives as depicted in Sections 5 and 6, etc.)

13. AMERICAN Flex-Ring fittings will work as push-on unrestrained fittings as long as suitable external restraint (thrust blocks, etc.) is applied. Flex-Ring fittings are thus furnished as "Fastite" fittings in many sizes and configurations, at Foundry option.

AMERICAN Ductile Iron Flex-Ring® and Lok-Ring® Fittings

ANSI/AWWA C153/A21.53 and AMERICAN Standard

Flex-Ring and Lok-Ring Fittings Joint Dimensions

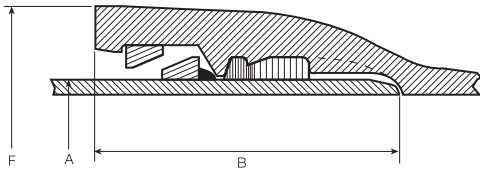

4"–12" Flex–Ring

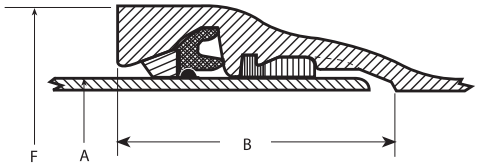

16"–48" Flex–Ring

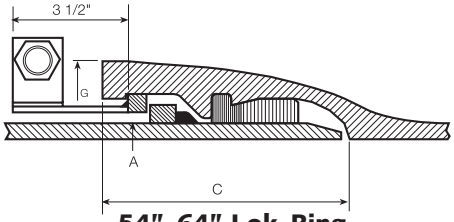

54"–64" Lok–Ring

Table No. 4-1

Size in.	Dimensions in Inches				
	A Outside Diameter	B Socket Depth Flex-Ring	C Socket Depth Lok-Ring	F* Bell O.D. Flex-Ring	G* Bell O.D. Lok-Ring
4	4.80	5.71	–	7.18	–
6	6.90	5.71	–	9.20	–
8	9.05	5.83	–	11.35	–
10	11.10	6.74	–	13.75	–
12	13.20	6.74	–	16.37	–
16	17.40	7.38	–	21.49	–
18	19.50	8.20	–	23.71	–
20	21.60	8.20	–	25.83	–
24	25.80	8.96	–	30.70	–
30	32.00	9.63	–	37.04	–
36	38.30	9.63	–	43.54	–
42	44.50	10.84	–	50.62	–
48	50.80	12.37	–	56.98	–
54	57.56	–	10.07	–	62.14
60	61.61	–	10.57	–	66.27
64	65.67	–	10.57	–	70.45

*Dimensions subject to change at our option.
For Fastite pipe dimensions, see Section 2.
For Flex-Ring and Lok-Ring pipe dimensions, see Section 9.

AMERICAN Ductile Iron Flex-Ring® and Lok-Ring® Fittings

ANSI/AWWA C153/A21.53 and AMERICAN Standard

Flex-Ring End and Lok-Ring End

Standard Dimensions

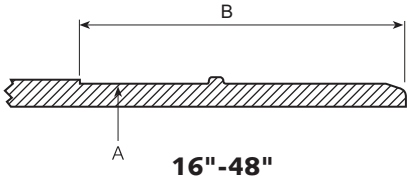

16"-48"
Flex-Ring End

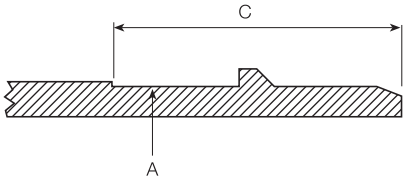

54"-64" Lok-Ring End

Table No. 4-2

Size in.	A Outside Diameter in.	B Flex-Ring Minimum Gauge Length in.	C Lok-Ring Minimum Gauge Length in.
16	17.4	9	-
18	19.5	9	-
20	21.6	9	-
24	25.8	10	-
30	32.0	10	-
36	38.3	10	-
42	44.5	11 1/2	-
48	50.8	13	-
54	57.56	-	12
60	61.61	-	13
64	65.67	-	13

Maximum Allowable Separation Push-On Fitting Joints

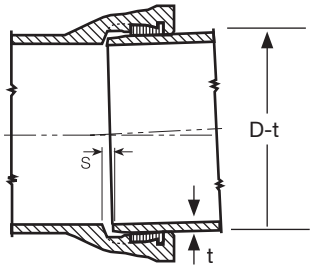

Maximum allowable separation, "S", in a push-on fitting joint is approximately equal to the median pipe diameter in inches times the sine of the deflection angle. This is provided for information only and should not be used to determine precise joint deflection.

Allowable Deflection Push-On Fitting Joints

Table No. 4-3

Size in.	Flex-Ring Deflection Angle (Deg.)	Lok-Ring Deflection Angle (Deg.)
4	5	–
6	5	–
8	5	–
10	5	–
12	5	–
16	3.75	–
18	3.75	–
20	3.50	–
24	3.00	–
30	2.50	–
36	2.00	–
42	2.00	–
48	1.50	–
54	–	0.5
60	–	0.5
64	–	0.5

AMERICAN Ductile Iron Flex-Ring® and Lok-Ring® Fittings

ANSI/AWWA C153/A21.53* and AMERICAN Standard

90° Bends (1/4th)

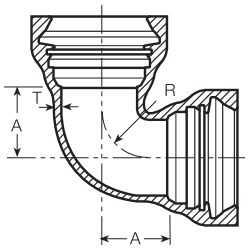

Flex-Ring Bell-Bell**

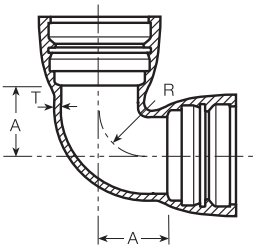

Lok-Ring Bell-Bell**

Table No. 4-4

Size in.	Pressure† Rating psi	Dimensions in Inches			Weight in Pounds	
		T	A	R	Flex-Ring	Lok-Ring
4	350	0.34	4.00	3.00	46	–
6	350	0.36	5.00	4.00	64	–
8	350	0.38	6.50	5.38	91	–
10	350	0.40	7.50	6.25	143	–
12	350	0.42	9.00	7.50	232	–
16	350	0.50††	15.00	12.50	515	–
18	350	0.75	16.50	14.00	720	–
20	350	0.80	18.00	15.50	815	–
24	350	0.61	17.00	15.50	760	–
30	250	0.66	22.75	20.50	1290	–
36	250	0.74	25.75	23.50	1810	–
42	250	0.82	29.25	26.50	2784	–
48	250	0.90	33.25	30.50	3960	–
54	250	0.90	37.00	34.25	–	3930
60	250	0.94	39.50	36.50	–	4620
64	250	0.99	42.00	38.75	–	5385

*AWWA C153 configurations with shorter center-to-socket dimensions, etc. may be furnished in some cases in the 18"–20" size range. **Contact AMERICAN** if dimensions are critical.
**30" and larger Flex-Ring and Lok-Ring 90° Bends may be furnished with Flex-Ring Ends or Lok-Ring Ends. See Table No. 4-2.
† Higher pressure ratings are available on special applications. Pressure ratings may be limited below the values shown by the pressure rating of the pipe to which fitting is attached, or the restrained joint used.
Based on performance testing per AWWA C153, AMERICAN can rate 30"–48" C153 bends 350 psi. Contact AMERICAN.
See General Notes on page 4-2.
†† 16" Flex-Ring fittings may have greater "T" dimensions than those shown.

AMERICAN Ductile Iron Flex-Ring® and Lok-Ring® Fittings

ANSI/AWWA C153/A21.53* and AMERICAN Standard

45° Bends (1/8th)

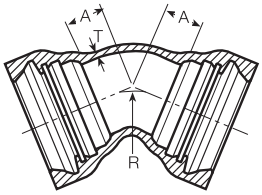

Flex-Ring Bell-Bell**

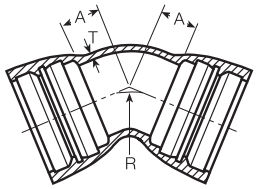

Lok-Ring Bell-Bell**

Table No. 4-5

Size in.	Pressure† Rating psi	Dimensions in Inches			Weight in Pounds	
		T	A	R	Flex-Ring	Lok-Ring
4	350	0.34	2.00	2.41	43	–
6	350	0.36	3.00	4.83	60	–
8	350	0.38	3.50	5.75	80	–
10	350	0.40	4.50	7.85	130	–
12	350	0.42	5.50	9.66	213	–
16	350	0.50††	8.00	13.25	425	–
18	350	0.75	8.50	14.50	595	–
20	350	0.80	9.50	16.88	665	–
24	350	0.61	7.50	14.50	620	–
30	250	0.66	10.50	19.92	1010	–
36	250	0.74	12.00	23.54	1395	–
42	250	0.82	14.00	27.20	2235	–
48	250	0.90	15.00	29.60	2960	–
54	250	0.90	20.28	42.32	–	3070
60	250	0.94	21.26	44.08	–	3560
64	250	0.99	22.24	45.85	–	4085

*AWWA C153 configurations with shorter center-to-socket dimensions, etc., may be furnished in some cases in the 18"–20" size range. **Contact AMERICAN** if dimensions are critical.

**30 and larger Flex-Ring and Lok-Ring 45° Bends may be furnished with Flex-Ring Ends or Lok-Ring Ends. See Table No. 4-2.

† Higher pressure ratings are available on special applications. **Based on performance testing per AWWA C153, AMERICAN can rate 30"–48" C153 bends 350 psi. Contact AMERICAN.**

†† 16" Flex-Ring fittings may have greater "T" dimensions than those shown.

See General Notes on page 4-2.

AMERICAN Ductile Iron Flex-Ring® and Lok-Ring® Fittings

ANSI/AWWA C153/A21.53* and AMERICAN Standard

22 1/2° Bends (1/16th)

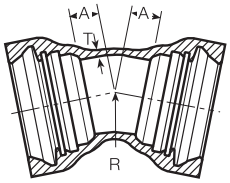

Flex-Ring Bell-Bell**

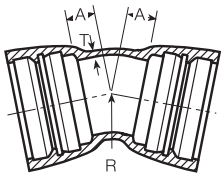

Lok-Ring Bell-Bell**

Table No. 4-6

Size in.	Pressure† Rating psi	Dimensions in Inches			Weight in Pounds	
		T	A	R	Flex-Ring	Lok-Ring
4	350	0.34	1.50	2.51	42	–
6	350	0.36	2.00	5.03	56	–
8	350	0.38	2.50	6.94	76	–
10	350	0.40	3.00	8.80	120	–
12	350	0.42	3.50	10.05	198	–
16	350	0.50††	8.00	27.62	430	–
18	350	0.75	8.50	30.19	600	–
20	350	0.80	9.50	35.19	670	–
24	350	0.61	4.50	15.10	525	–
30	250	0.66	6.75	22.60	900	–
36	250	0.74	7.75	27.70	1220	–
42	250	0.82	9.00	31.40	1972	–
48	250	0.90	10.00	36.50	2630	–
54	250	0.90	10.24	37.65	–	2305
60	250	0.94	10.63	38.36	–	2650
64	250	0.99	11.02	39.06	–	3000

*AWWA C153 configurations with shorter center-to-socket dimensions, etc., may be furnished in some cases in the 18"–20" size range. Contact AMERICAN if dimensions are critical.

**30" and larger Flex-Ring and Lok-Ring 22 $^{1}/_{2}$° bends may be furnished with Flex-Ring Ends or Lok-Ring Ends. See Table No. 4-2.

† Higher pressure ratings are available on special applications. Based on performance testing per AWWA C153, AMERICAN can rate 30"–48" C153 bends 350 psi. Contact AMERICAN.

†† 16" Flex-Ring fittings may have greater "T" dimensions than those shown.
See General Notes on page 4-2.

AMERICAN Ductile Iron Flex-Ring® and Lok-Ring® Fittings

ANSI/AWWA C153/A21.53* and AMERICAN Standard

11 1/4° Bends (1/32nd)

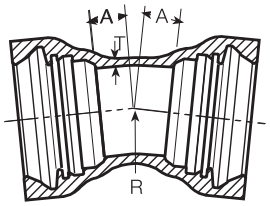

Flex-Ring Bell-Bell**

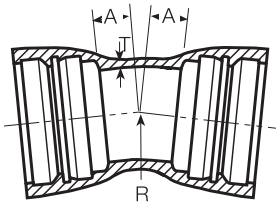

Lok-Ring Bell-Bell**

Table No. 4-7

Size in.	Pressure† Rating psi	Dimensions in Inches			Weight in Pounds	
		T	A	R	Flex-Ring	Lok-Ring
4	350	0.34	1.25	2.54	41	–
6	350	0.36	1.50	5.08	54	–
8	350	0.38	1.75	6.40	72	–
10	350	0.40	2.00	7.61	114	–
12	350	0.42	2.25	7.61	187	–
16	350	0.50††	8.00	55.81	430	–
18	350	0.75	8.50	60.94	605	–
20	350	0.80	9.50	71.06	675	–
24	350	0.89	3.00	15.33	490	–
30	250	0.66	4.75	25.40	830	–
36	250	0.74	5.00	27.90	1100	–
42	250	0.82	6.00	33.00	1934	–
48	250	0.90	6.50	33.50	2350	–
54	250	0.90	6.50	38.07	–	2000
60	250	0.94	7.00	40.61	–	2320
64	250	0.99	7.00	38.07	–	2590

*AWWA C153 configurations with shorter center-to-socket dimensions, etc., may be furnished in some cases in the 18"–20" size range. Contact AMERICAN if dimensions are critical.
**30" and larger Flex-Ring and Lok-Ring 11 $^{1}/_{4}$° bends may be furnished with Flex-Ring Ends or Lok-Ring Ends. See Table No. 4-2.
† Higher pressure ratings are available on special applications. Based on performance testing per AWWA C153, AMERICAN can rate 30"–48" C153 bends 350 psi. Contact AMERICAN.
††16" Flex-Ring fittings may have greater "T" dimensions than those shown.
See General Notes on page 4-2.

AMERICAN Ductile Iron Flex-Ring® and Lok-Ring® Fittings

ANSI/AWWA C153/A21.53* and AMERICAN Standard

Tees and Crosses

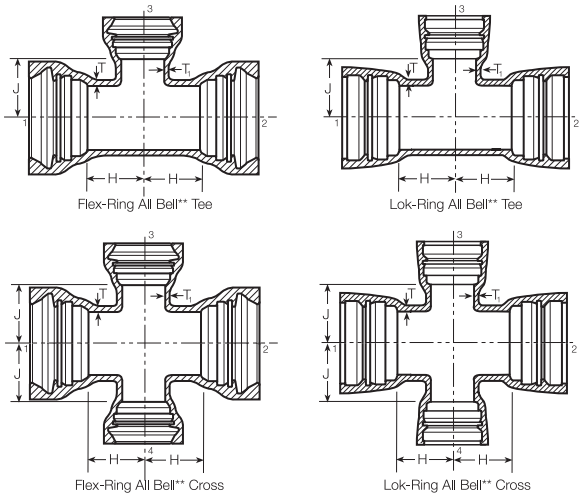

Table No. 4-8

Size in. Run	Size in. Branch	Pressure Rating psi †	Dimensions in Inches T	T_1	H	J	Weight in Pounds Tee **Flex-Ring All Bell	Tee **Lok-Ring All Bell	Cross **Flex-Ring All Bell	Cross **Lok-Ring All Bell
4	4	350	0.34	0.34	4.00	4.00	68	–	–	–
6	4	350	0.36	0.34	4.00	5.00	84	–	–	–
6	6	350	0.36	0.36	5.00	5.00	93	–	–	–
8	4	350	0.38	0.34	4.00	6.50	104	–	–	–
8	6	350	0.38	0.36	5.00	6.50	115	–	–	–
8	8	350	0.38	0.38	6.50	6.50	131	–	–	–
10	4	350	0.40	0.34	4.00	7.50	148	–	–	–
10	6	350	0.40	0.36	5.00	7.50	160	–	–	–
10	8	350	0.40	0.38	6.50	7.50	178	–	–	–
10	10	350	0.40	0.40	7.50	7.50	204	–	–	–
12	4	350	0.42	0.34	4.00	8.75	222	–	–	–
12	6	350	0.42	0.36	5.00	8.75	237	–	–	–
12	8	350	0.42	0.38	6.50	8.75	257	–	–	–
12	10	350	0.42	0.40	7.50	8.75	284	–	–	–
12	12	350	0.42	0.42	8.75	8.75	330	–	–	–
16	4	350	.50††	.34††	15.0	15.0	645	–	–	–
16	6	350	.50††	.36††	15.0	15.0	655	–	705	–
16	8	350	.50††	.38††	15.0	15.0	670	–	730	–
16	10	350	.50††	.40††	15.0	15.0	705	–	–	–
16	12	350	.50††	.42††	15.0	15.0	730	–	850	–
16	14	350	.50††	.47††	15.0	15.0	775	–	–	–
16	16	350	.50††	.50††	15.0	15.0	805	–	1000	–

16" and 24"–64" fittings are generally per AWWA C153. While AWWA C153 shows 54"–64" fittings with 150 psi ratings, AMERICAN rates many 54"–64" fittings 250 psi as AMERICAN Standard based on performance testing.

**30" and larger Flex-Ring and Lok-Ring Tees and Crosses may be furnished on the runs with Flex-Ring Ends or Lok-Ring Ends. See Table No. 4-2.

† Higher pressure ratings are available on special applications. Contact AMERICAN.

Note: Tees and Crosses with smaller reductions may be available; however, welded-on outlets are normally preferable in these cases from a layout, installation, and economical standpoint. See Section 7.

†† 16" Flex-Ring fittings may have greater "T" and "T_1" dimensions than those shown.

See General Notes on page 4-2.

AMERICAN Ductile Iron Flex-Ring® and Lok-Ring® Fittings

ANSI/AWWA C153/A21.53* and AMERICAN Standard

Tees and Crosses

Table No. 4-8 —Continued

Size in.		Pressure Rating psi †	Dimensions in Inches				Weight in Pounds			
							Tee		Cross	
Run	Branch		T	T_1	H	J	**Flex-Ring All Bell	**Lok-Ring All Bell	**Flex-Ring All Bell	**Lok-Ring All Bell
18	6	350	0.75	0.55	13.0	15.5	810	–	850	–
18	8	350	0.75	0.60	13.0	15.5	820	–	880	–
18	10	350	0.75	0.68	13.0	15.5	855	–	940	–
18	12	350	0.75	0.75	13.0	15.5	875	–	990	–
18	14	350	0.75	0.66	16.5	16.5	1015	–	1185	–
18	16	350	0.75	0.70	16.5	16.5	1045	–	1240	–
18	18	350	0.75	0.75	16.5	16.5	1125	–	1405	–
20	6	350	0.80	0.55	14.0	17.0	905	–	950	–
20	8	350	0.80	0.60	14.0	17.0	920	–	980	–
20	10	350	0.80	0.68	14.0	17.0	950	–	1040	–
20	12	350	0.80	0.75	14.0	17.0	975	–	1090	–
20	14	350	0.80	0.66	14.0	17.0	1020	–	1175	–
20	16	350	0.80	0.70	18.0	18.0	1170	–	1365	–
20	18	350	0.80	0.75	18.0	18.0	1255	–	1530	–
20	20	350	0.80	0.80	18.0	18.0	1270	–	1565	–
24	6	350	0.61	0.36	13.0	17.0	920	–	870	–
24	8	350	0.61	0.38	13.0	17.0	930	–	900	–
24	10	350	0.61	0.40	13.0	17.0	950	–	935	–
24	12	350	0.61	0.42	13.0	17.0	965	–	965	–
24	14	350	0.61	0.47	13.0	17.0	990	–	1020	–
24	16	350	0.61	0.50	13.0	17.0	1005	–	1060	–
24	18	350	0.61	0.54	17.0	17.0	1035	–	1225	–
24	20	350	0.61	0.57	17.0	17.0	1050	–	1265	–
24	24	350	0.61	0.61	17.0	17.0	1130	–	1380	–
30	20	250	0.66	0.57	16.5	21.0	1500	–	–	–
30	24	250	0.66	0.61	22.0	22.0	1840	–	2070	–
30	30	250	0.66	0.66	22.0	22.0	2000	–	2480	–
36	24	250	0.74	0.61	18.5	26.0	2070	–	–	–
36	30	250	0.74	0.66	26.0	26.0	2670	–	3390	–
36	36	250	0.74	0.74	26.0	26.0	2740	–	3400	–

16" and 24"–64" fittings are generally per AWWA C153. While AWWA C153 shows 54"–64" fittings with 150 psi ratings, AMERICAN rates many 54"–64" fittings 250 psi as AMERICAN Standard based on performance testing.

**30" and larger Flex-Ring and Lok-Ring Tees and Crosses may be furnished on the runs with Flex-Ring Ends or Lok-Ring Ends. See Table No. 4-2.

† Higher pressure ratings are available on special applications. Contact AMERICAN.

Note: Tees and Crosses with smaller reductions may be available; however, welded-on outlets are normally preferable in these cases from a layout, installation, and economical standpoint. See Section 7.

AMERICAN Ductile Iron Flex-Ring® and Lok-Ring® Fittings

ANSI/AWWA C153/A21.53* and AMERICAN Standard

Tees and Crosses

Table No. 4-8 —Continued

Size in.		Pressure Rating psi †	Dimensions in Inches				Weight in Pounds			
							Tee		Cross	
Run	Branch		T	T_1	H	J	**Flex-Ring All Bell	**Lok-Ring All Bell	**Flex-Ring All Bell	**Lok-Ring All Bell
42	24	250	0.82	0.61	22.0	27.5	3370	–	3570	–
42	30	250	0.82	0.66	22.0	29.5	3340	–	3860	–
42	36	250	0.82	0.74	30.0	30.0	3300	–	4670	–
42	42	250	0.82	0.82	30.0	30.0	4830	–	6970	–
48	24	250	0.90	0.61	23.0	32.0	3820	–	–	–
48	30	250	0.90	0.66	23.0	32.0	4180	–	4610	–
48	36	250	0.90	0.74	33.5	32.3	5190	–	5760	–
48	42	250	0.90	0.82	33.5	33.5	5600	–	6550	–
48	48	250	0.90	0.90	33.5	33.5	6130	–	7680	–
54	30	250	1.05	1.03	29.3	37.0	–	5086	–	5729
54	36	250	1.05	1.15	29.28	37.0	–	–	–	6380
54	42	250	1.05	1.28	38.59	39.0	–	6557	–	–
54	48	250	1.05	1.42	38.59	39.0	–	7001	–	–
54	54	250	1.05	1.05	38.59	38.59	–	8279	–	15774
60	36	250	1.10	1.15	29.53	39.0	–	–	–	6760
60	42	250	1.10	1.28	29.53	41.0	–	6428	–	–
60	48	250	1.10	1.42	40.95	41.0	–	8025	–	–
60	54	250	1.10	1.05	40.95	40.7	–	8913	–	11125
60	60	250	1.10	1.10	40.95	40.95	–	9975	–	12619
64	36	250	1.16	1.15	34.25	42.0	–	–	–	8360
64	42	250	1.16	1.28	34.25	42.0	–	7622	–	8708
64	48	250	1.16	1.42	34.25	44.0	–	8815	–	–
64	54	250	1.16	1.05	43.31	44.0	–	10336	–	–
64	60	250	1.16	1.10	43.31	44.0	–	10770	–	–
64	64	250	1.16	1.16	43.31	43.31	–	11806	–	14884

16" and 24"–64" fittings are generally per AWWA C153. While AWWA C153 shows 54"–64" fittings with 150 psi ratings, AMERICAN rates many 54"–64" fittings 250 psi as AMERICAN Standard based on performance testing.

† Higher pressure ratings are available on special applications. Contact AMERICAN.

Note: Tees and Crosses with smaller reductions may be available; however, welded-on outlets are normally preferable in these cases from a layout, installation, and economical standpoint. See Section 7.

AMERICAN Ductile Iron Flex-Ring® and Lok-Ring® Fittings

ANSI/AWWA C153/A21.53* and AMERICAN Standard

Reducers

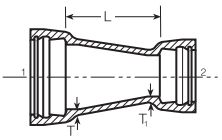

Bell and Bell

Table No. 4-9

Size in.		Pressure Rating psi†	Thickness in Inches		Bell x Bell	
Large End	Small End		T Large End	T_1 Small End	L Laying Length in.	Weight lb
6	4	350	0.36	0.34	4	49
8	4	350	0.38	0.34	5	60
8	6	350	0.38	0.36	4	64
10	4	350	0.40	0.34	7	85
10	6	350	0.40	0.36	5	88
10	8	350	0.40	0.38	4	93
12	4	350	0.42	0.34	9	128
12	6	350	0.42	0.36	7	130
12	8	350	0.42	0.38	5	133
12	10	350	0.42	0.40	4	149
16	6	350	.50††	.36††	11	135
16	8	350	.50††	.38††	9	137
16	10	350	.50††	.40††	7	139
16	12	350	.50††	.42††	5	137
16	14	350	.50††	.47††	4	160
18	8	350	0.75	0.60	19	410
18	10	350	0.75	0.68	19	449
18	12	350	0.75	0.75	19	491
18	14	350	0.75	0.66	19	533
18	16	350	0.75	0.70	19	565
20	8	350	0.80	0.60	20	423
20	10	350	0.80	0.68	20	467
20	12	350	0.80	0.75	20	504
20	14	350	0.80	0.66	20	546
20	16	350	0.80	0.70	20	583
20	18	350	0.80	0.75	20	579
24	12	350	0.89	0.75	24	706
24	14	350	0.89	0.66	24	748
24	16	350	0.89	0.70	24	785
24	18	350	0.89	0.75	24	786
24	20	350	0.89	0.80	24	885
30	12	250	1.03	0.75	30	910
30	16	250	1.03	0.70	30	985
30	18	250	1.03	0.75	30	1030
30	20	250	1.03	0.80	30	1080
30	24	250	1.03	0.89	30	1210

*AWWA C153 configurations with shorter center-to-socket dimensions, etc., may be furnished in some cases in the 18"–48" size range.
Contact AMERICAN if dimensions are critical.
† Higher pressure ratings are available on special applications. Contact AMERICAN.
†† 16" Flex-Ring fittings may have greater "T" and "T_1" dimensions than those shown.
See General Notes on page 4-2.

AMERICAN Ductile Iron Flex-Ring® and Lok-Ring® Fittings

ANSI/AWWA C153/A21.53* and AMERICAN Standard

Reducers

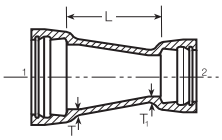

Bell and Bell

Table No. 4-9 — Continued

Size in.		Pressure Rating psi†	Thickness in Inches		Bell x Bell**	
Large End	Small End		T Large End	T_1 Small End	L Laying Length in.	Weight lb
36	20	250	1.15	0.80	36	1490
36	24	250	1.15	0.89	36	1635
36	30	250	1.15	1.03	36	1925
42	20	250	1.28	0.80	42	1710
42	24	250	1.28	0.89	42	1875
42	30	250	1.28	1.03	42	2200
42	36	250	1.28	1.15	42	2540
48	24	250	1.42	0.89	48	2430
48	30	250	1.42	1.03	48	2790
48	36	250	1.42	1.15	48	3170
48	42	250	1.42	1.28	48	3315
54	30	250	0.90	1.00	31.25	2035
54	36	250	0.90	1.15	27.25	2180
54	42	250	0.90	1.25	19.25	1850
54	48	250	0.90	1.40	15.25	1890
60	30	250	0.94	1.00	35.5	2345
60	36	250	0.94	1.15	31.5	2505
60	42	250	0.94	1.25	23.5	2175
60	48	250	0.94	1.40	19.5	2230
60	54	250	0.94	0.90	10.25	1815
64	30	250	0.99	1.00	39.25	2690
64	36	250	0.99	1.15	35.25	2860
64	42	250	0.99	1.25	27.25	2525
64	48	250	0.99	1.40	23.25	2590
64	54	250	0.99	0.90	14.5	2145
64	60	250	0.99	0.94	10.25	2050

*AWWA C153 configurations with shorter center-to-socket dimensions, etc., may be furnished in some cases in the 18"–48" size range.
Contact AMERICAN if dimensions are critical.
**Reducers may be furnished with Flex-Ring or Lok-Ring bells and Flex-Ring or Lok-Ring ends in larger sizes. Dimensions (including laying lengths in some cases) and weights will be different than those shown above. Plain ends on available reducers may or may not be beveled/smoothed for push-on joint assembly. If push-on assembly is required, such ends may require field bevel/smoothing.
Contact AMERICAN if further information is needed. See Table No. 4-2 and 7-4.
† Higher pressure ratings are available on special applications. Contact AMERICAN.
See General Notes on page 4-2.

C110 DUCTILE IRON FULL BODY FITTINGS

SAMPLE SPECIFICATIONS

(Current ANSI/AWWA revisions apply)

Flanged fittings, 2" through 64", shall be manufactured of Ductile Iron in accordance with all applicable terms and provisions of standards ANSI/AWWA C110/A21.10. Flange surfaces shall be faced and drilled in accordance with ANSI Class 125, B16.1. All Ductile Iron flanged fittings shall be rated for water pressure of 250 psi. Flanged ductile iron fittings in 24" (610 mm) and smaller sizes may be rated for 350 psi (2,413 kPa) with the use of special gaskets .

NOTE: Fittings are available prime coated, bare or epoxy coated. All coated fittings meet requirements of NSF-61, NSF-372 and Annex G. Interiors of fittings shall be lined and seal coated in accordance with ANSI/AWWA C104/A21.4. Installation of fittings shall be per AWWA C110.

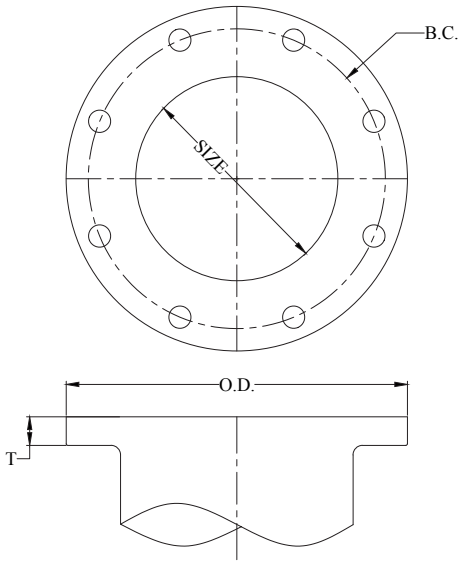

ANSI/AWWA C110 Class 125 Flange Fittings

FLANGE DETAILS

Nominal Pipe Size Inch	Flange O.D.	B.C. Diameter	Flange Thickness T	Bolt Hole Diameter	Number of Bolts	Bolt Dia. and Lengths
2	6.00	4.75	0.62	0.750	4	5/8 x 2 1/4
3	7.50	6.00	0.75	0.750	4	5/8 x 2 1/2
4	9.00	7.50	0.94	0.750	8	5/8 x 3
6	11.00	9.50	1.00	0.880	8	3/4 x 3 1/2
8	13.50	11.75	1.12	0.880	8	3/4 x 3 1/2
10	16.00	14.25	1.19	1.000	12	7/8 x4
12	19.00	17.00	1.25	1.000	12	7/8 x4
14	21.00	18.75	1.38	1.130	12	1x 4 1/2
16	23.50	21.25	1.44	1.130	16	1 x 4 1/2
18	25.00	22.75	1.56	1.250	16	1 1/8 x 5
20	27.50	25.00	1.69	1.250	20	1 1/8 x5
24	32.00	29.50	1.88	1.375	20	1 1/4 x 5 1/2
30	38.75	36.00	2.12	1.375	28	1 1/4 x 6 1/2
36	46.00	42.75	2.38	1.625	32	1 1/2 x 7
42	53.00	49.50	2.62	1.625	36	1 1/2 x 7 1/2
48	59.50	56.00	2.75	1.625	44	1 1/2 x 8
54	66.25	62.75	3.00	2.00	44	1 3/4 x 8 1/2
60	73.00	69.25	3.12	2.00	52	1 3/4 x 9
64	80.00	76.00	3.38	2.00	52	1 3/4 x 9

Contact Tyler Union for 54"–64" flange fitting information.

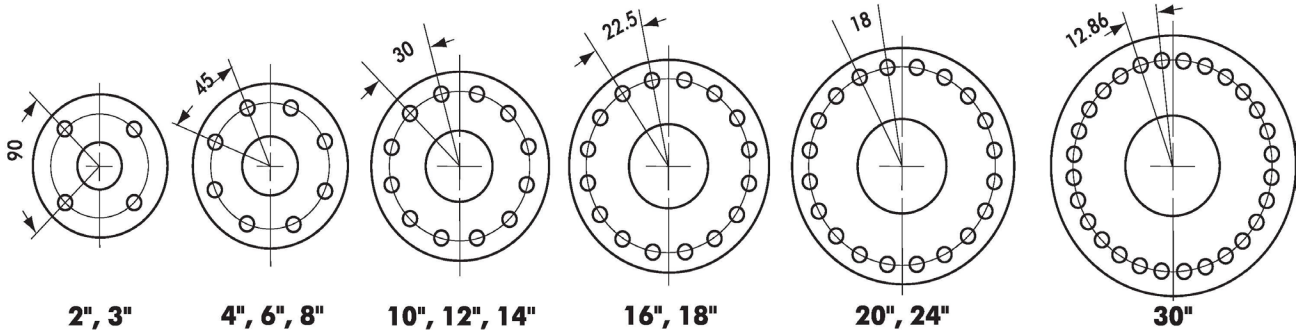

NOTE: Drilling templates are in multiples of four so that fittings may be made to face in any quarter. Bolt holes shall straddle the center line.

C110 DUCTILE IRON FULL BODY FITTINGS

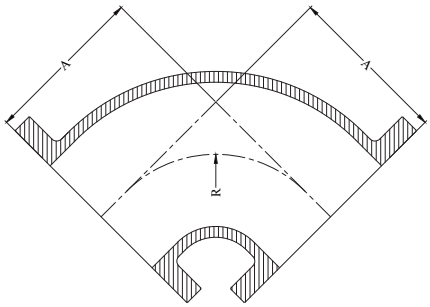

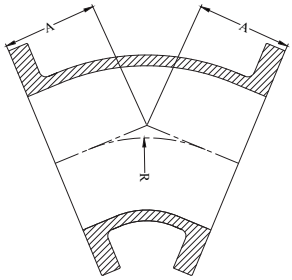

90° (1/4) BENDS				
			Domestic	Import
Size	R	A	Weight	Weight
2	3.00	4.50	14	–
3	4.00	5.50	26	25
4	4.50	6.50	44	45
6	6.00	8.00	67	65
8	7.00	9.00	115	105
10	9.00	11.00	159	165
12	10.00	12.00	244	235
14	11.50	14.00	341	290
16	12.50	15.00	455	370
18	14.00	16.50	527	450
20	15.50	18.00	878	580
24	18.50	22.00	1085	900
30	21.50	25.00	1427	1430
36	24.50	28.00	2135	2135
42	27.50	31.00	3055	3055
48	30.50	34.00	4095	4095

45° (1/8) BENDS				
			Domestic	Import
Size	R	A	Weight	Weight
2	–	–	–	–
3	3.62	3.00	20	20
4	4.81	4.00	36	40
6	7.25	5.00	57	55
8	8.44	5.50	105	90
10	10.88	6.50	127	130
12	13.25	7.50	149	195
14	12.06	7.50	260	220
16	13.25	8.00	322	280
18	14.50	8.50	371	325
20	16.88	9.50	485	430
24	18.12	11.00	742	630
30	27.75	15.00	1355	1120
36	35.00	18.00	1755	1755
42	42.25	21.00	2600	2600
48	49.50	24.00	3580	3580

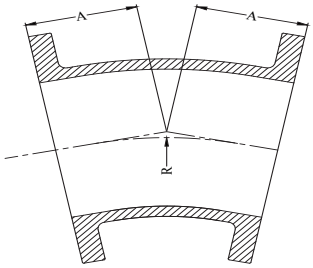

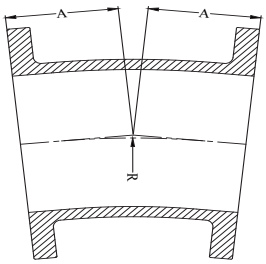

22½° (1/16) BENDS				
			Domestic	Import
Size	R	A	Weight	Weight
2	–	–	–	–
3	7.56	3.00	22	20
4	10.06	4.00	35	40
6	15.06	5.00	64	55
8	17.62	5.50	90	90
10	22.62	6.50	130	135
12	27.67	7.50	199	205
14	25.12	7.50	281	225
16	27.62	8.00	315	285
18	30.19	8.50	402	335
20	35.19	9.50	543	435
24	37.69	11.00	528	640
30	57.81	15.00	1385	1135
36	72.88	18.00	1790	1790
42	88.00	21.00	2665	2663
48	103.06	24.00	3665	3665

11¼° (1/32) BENDS				
			Domestic	Import
Size	R	A	Weight	Weight
2	–	–	–	–
3	15.25	3.00	20	20
4	20.31	4.00	40	40
6	30.50	5.00	56	55
8	35.50	5.50	90	90
10	45.69	6.50	136	135
12	55.81	7.50	213	205
14	50.75	7.50	261	225
16	55.81	8.00	315	285
18	60.94	8.50	385	335
20	71.06	9.50	505	435
24	76.12	11.00	760	645
30	116.75	15.00	1395	1150
36	147.25	18.00	1805	1805
42	177.69	21.00	2680	2680
48	208.12	24.00	3695	3695

C110 DUCTILE IRON FULL BODY FITTINGS

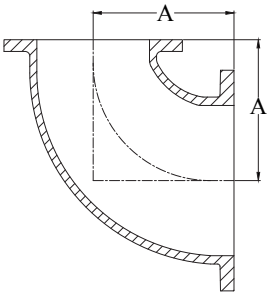

90° REDUCING BEND (1/4)		
Size	A	Weight
4x3	6.50	35
6x4	8.00	65
8x4	9.00	88
8x6	9.00	96
10x6	11.00	126
10x8	11.00	151
12x6	12.00	172
12x8	12.00	191
12x10	12.00	218
14x6	14.00	230
14x8	14.00	240
16x10	15.00	280

*Not included in AWWA C110. Contact Tyler Union for sizes not shown.

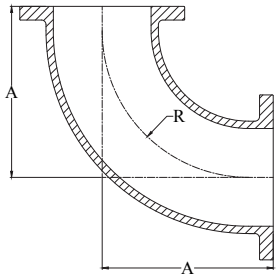

90° LONG RADIUS BEND (1/4)			
Size	R	A	Weight
3	6.25	7.75	32
4	7.00	9.00	46
6	9.50	11.50	83
8	12.00	14.00	140
10	14.50	16.50	252
12	17.00	19.00	310
14	19.00	21.50	475
16	21.50	24.00	630
18	–	26.50	840
20	–	29.00	1080
24	–	34.00	1640

*Not included in AWWA C110. Contact Tyler Union for sizes not shown.

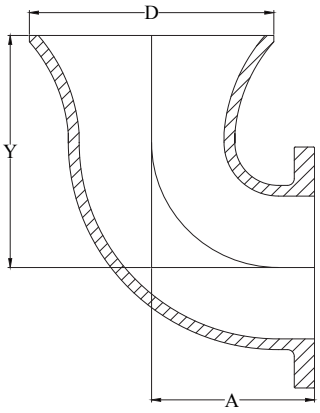

FLANGE AND FLARE 90° BEND (1/4)				
Size	D	A	Y	Weight
3	8.00	5.50	8.50	26
4	9.00	6.50	9.50	39
6	11.00	8.00	12.00	73
8	14.00	9.00	13.00	110
10	16.00	11.00	15.00	171
12	19.00	12.00	16.00	253
14	21.00	14.00	21.50	450
16	24.00	15.00	23.00	545
18	25.00	16.50	24.50	675
20	28.00	18.00	26.00	860
24	32.00	22.00	30.00	1195
30	39.00	25.00	38.00	2070
36	48.00	28.00	38.00	2900

C110 DUCTILE IRON FULL BODY FITTINGS

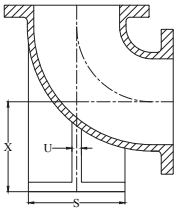

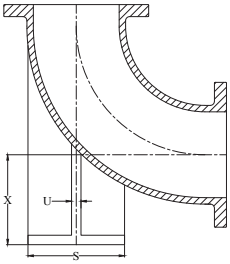

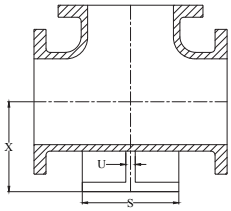

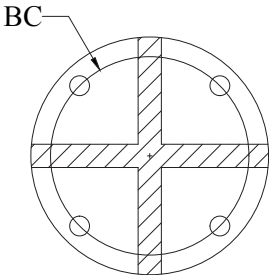

90° BASE BENDS				90° LONG RADIUS BASE BEND			BASE TEES	
Size	X	S	U	Support Pipe size	Weight			
					90°	90°L R	Tee	90°
3	4.88	5.00	0.50	1.50	38	41	47	35
4	5.50	6.00	0.50	2.00	50	60	76	55
6	7.00	7.00	0.62	2.50	83	100	115	85
8	8.38	9.00	0.88	4.00	142	180	195	145
10	9.75	9.00	0.88	4.00	210	315	315	145
12	11.25	11.00	1.00	6.00	300	427	450	300
14	12.50	11.00	1.00	6.00	400	580	570	360
16	13.75	11.00	1.00	6.00	505	740	710	445
18	15.00	13.50	1.12	8.00	645	–	900	565
20	16.00	13.50	1.12	8.00	805	–	1125	700
24	18.50	13.50	1.12	8.00	1215	–	1927	1030
30	23.00	16.00	1.15	10.00	1945	–	–	1625
36	26.00	19.00	1.15	12.00	2395	2895	–	2385
42	30.00	23.50	1.28	–	–	–	–	3465
48	34.00	25.00	1.42	–	–	–	–	4610

Base bends are made to order only and not returnable. Bases are funrished faced and drilled.

BASE DRILLING DETAILS			
Size	BC	Bolt Hole Diameter	No of Holes
3	3.88	5/8	4
4	4.75	3/4	4
6	5.50	3/4	4
8	7.50	3/4	4
10	7.50	3/4	4
12	9.50	7/8	4
14	9.50	7/8	4
16	9.50	7/8	4
18	11.75	7/8	4
20	11.75	7/8	4
24	11.75	7/8	4
30	14.25	1	4
36	17.00	1	4
42	21.25	1 1/8	4
48	22.75	1 1/4	4

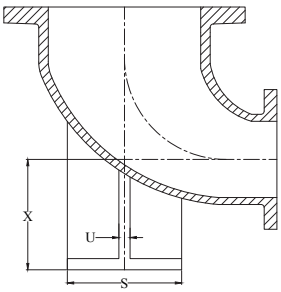

Base Under Large End

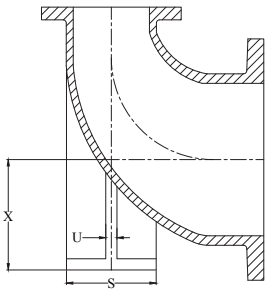

Base Under Small End

BASE				
Size	X	S	U	Weight
4x3	5.50	6.00	0.50	45
6x4	7.00	8.50	0.62	75
8x4	8.38	9.00	0.88	118
8x6	8.38	9.00	0.88	135
10x6	9.75	9.00	0.88	175
10x8	9.75	9.00	0.88	184
12x6	11.25	11.00	1.00	230
12x8	11.25	11.00	1.00	255

Note: X dimensions are identical on Base Under Large End & Base Under Small End. S dimension is determined by the largest fitting opening.

C110 DUCTILE IRON FULL BODY FITTINGS

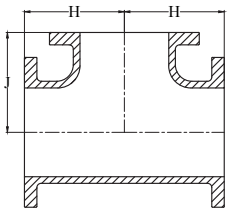

Straight Tees, Reducing on Branch Tees

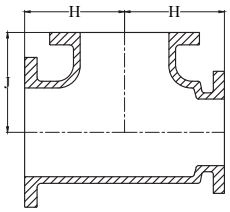

*Reducing on Run

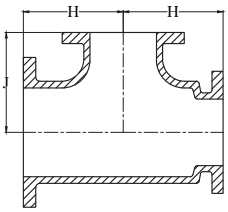

*Reducing on Run and Branch

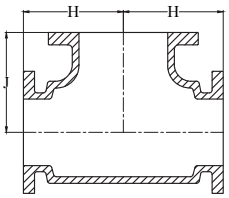

*Bullhead Tees

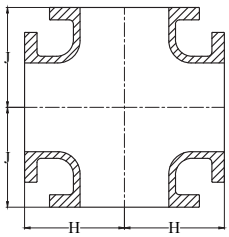

Straight and Reducing Crosses

TEES AND CROSSES								
Sizes					Domestic Weight		Import Weight	
Run	Run	Branch	H	J	Tee	Cross	Tee	Cross
2	2	2	5.00	4.50	20	–	–	–
3	3	2	5.50	5.50	35	–	–	–
3	3	3	5.50	5.50	42	51	40	50
4	3	3	6.50	5.50	53	–	–	–
4	4	2	6.50	6.50	55	–	–	–
4	4	3	6.50	6.50	54	76	60	70
4	4	4	6.50	6.50	60	_	65	80
4	4	6	8.00	8.00	88	–	–	–
*6	4	4	8.00	8.00	85	–	–	–
6	6	8	9.00	9.00	90	112	85	95
6	6	4	8.00	8.00	90	141	90	110
6	6	6	8.00	8.00	98	125	95	120
*8	6	4	9.00	9.00	130	–	–	–
*8	6	8	9.00	9.00	154	–	–	–
8	8	3	9.00	9.00	128	140	–	–
8	8	4	9.00	9.00	155	155	140	155
8	8	6	9.00	9.00	148	172	145	165
8	8	8	9.00	9.00	179	195	155	195
*8	8	10	11.00	11.00	225	–	–	–
*8	8	12	12.00	12.00	277	–	–	–
*†10	6	6	13.00	13.00	278	–	–	–
*†10	8	6	13.00	13.00	298	–	–	–
*†10	8	8	13.00	13.00	278	–	–	–
*†10	8	10	13.00	13.00	325	–	–	–
10	10	4	11.00	11.00	239	220	205	220
10	10	6	11.00	11.00	215	242	215	240
10	10	8	11.00	11.00	254	294	225	265
10	10	10	11.00	11.00	265	–	270	330
10	10	12	12.00	12.00	337	–	–	–
*†12	6	6	14.00	14.00	346	–	–	–
*†12	6	8	14.00	14.00	362	–	–	–
*†12	8	6	14.00	14.00	355	–	–	–
*12	8	8	14.00	14.00	375	–	–	–
*12	8	12	14.00	14.00	420	–	–	–
*†12	10	6	14.00	14.00	390	–	–	–
12	10	8	14.00	14.00	400	–	–	–
12	10	10	14.00	14.00	420	–	–	–
12	10	12	14.00	14.00	440	–	–	–

* Not included in AWWA C110.
† H and J dimensions are two-inches longer than straight tees.

C110 DUCTILE IRON FULL BODY FITTINGS

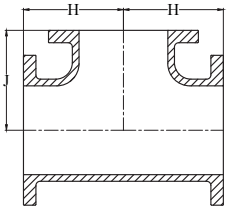

Straight Tees, Reducing on Branch Tees

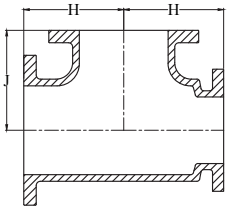

*Reducing on Run

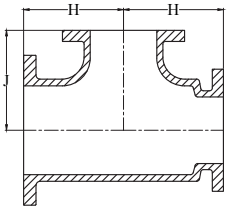

*Reducing on Run and Branch

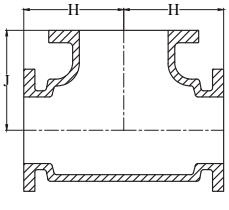

*Bullhead Tees

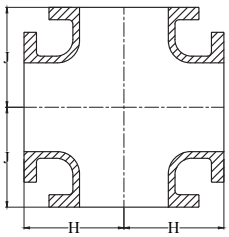

Straight and Reducing Crosses

TEES AND CROSSES								
Sizes					Domestic Weight		Import Weight	
Run	Run	Branch	H	J	Tee	Cross	Tee	Cross
12	12	4	12.00	12.00	322	310	290	–
12	12	6	12.00	12.00	297	326	295	–
12	12	8	12.00	12.00	346	351	310	–
12	12	10	12.00	12.00	394	415	360	–
12	12	12	12.00	12.00	369	438	385	–
*14	14	4	14.00	14.00	410	–	–	–
14	14	6	14.00	14.00	420	450	375	–
14	14	8	14.00	14.00	435	475	390	–
14	14	10	14.00	14.00	450		400	–
14	14	12	14.00	14.00	470	555	425	–
*14	14	14	14.00	14.00	500	595	435	–
*16	*14	4	15.00	15.00	525	–	–	–
16	*16	6	15.00	15.00	573	565	465	490
16	16	8	15.00	15.00	555	590	475	520
16	16	10	15.00	15.00	565	620	495	555
16	16	12	15.00	15.00	590	665	520	605
16	16	14	15.00	15.00	610	_	530	620
16	16	16	15.00	15.00	635	755	550	665
18	18	6	13.00	15.50	780	–	480	505
18	18	8	13.00	15.50	609	–	495	535
18	18	10	13.00	15.50	585	–	510	560
18	18	12	13.00	15.50	638	706	535	610
18	18	14	16.50	16.50	808	–	630	720
18	18	16	16.50	16.50	760	–	650	765
18	18	18	16.50	16.50	865	915	665	795
20	20	6	14.00	17.00	773	–	610	635
20	20	8	14.00	17.00	720	–	620	665
20	20	10	14.00	17.00	735	–	635	685
20	20	12	14.00	17.00	816	820	660	735
20	20		14.00	17.00	770	–	665	745
20	20	16	18.00	18.00	950	1065	810	915
20	20	18	18.00	18.00	965	_	820	945
20	20	20	18.00	18.00	1005	1175	855	1015
24	24	6	15.00	19.00	1089	–	845	875
24	24	8	15.00	19.00	1060	–	860	895
24	24	10	15.00	19.00	1020	–	88	930
24	24	12	15.00	19.00	1125	1100	890	960
24	24	14	15.00	19.00	1050	1125	900	975
24	24	16	15.00	19.00	1070	1160	915	1010
24	24	18	22.00	22.00	1534	–	1220	1365
24	24	20	22.00	22.00	1510	1695	1255	1430
24	24	24	22.00	22.00	1685	1850	1330	1570

* Not included in AWWA C110.

C110 DUCTILE IRON FULL BODY FITTINGS

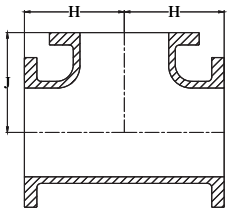

Straight Tees, Reducing on Branch Tees

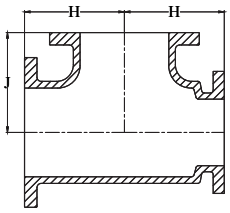

*Reducing on Run

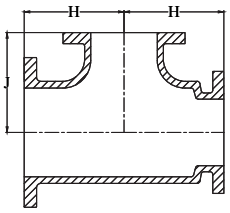

*Reducing on Run and Branch

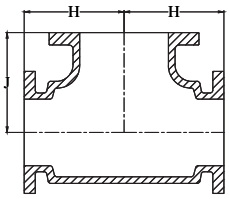

*Bullhead Tees

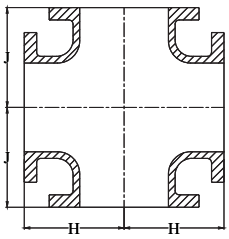

Straight and Reducing Crosses

TEES AND CROSSES								
Sizes					Domestic Weight		Import Weight	
Run	Run	Branch	H	J	Tee	Cross	Tee	Cross
30	30	6	18.00	23.00	1725	–	–	–
30	30	8	18.00	23.00	–	–	1490	1565
30	30	10	18.00	23.00	–	–	1490	1565
30	30	12	18.00	23.00	1801	–	1490	1565
30	30	14	18.00	23.00	–	–	1490	1570
30	30	16	18.00	23.00	–	–	1505	1605
30	30	18	18.00	23.00	1852	–	1515	1615
30	30	20	18.00	23.00	–	–	1540	1670
30	30	24	25.00	25.00	2475	2695	2025	2245
30	30	30	25.00	25.00	2615	2985	2150	2500
36	36	12	20.00	26.00	–	–	2170	2240
36	36	14	20.00	26.00	–	–	2175	2240
36	36	16	20.00	26.00	–	–	2185	2270
36	36	18	20.00	26.00	–	–	2190	2280
36	36	20	20.00	26.00	–	–	2210	2325
36	36	24	20.00	26.00	2255	–	2255	2405
36	36	30	28.00	28.00	3000	–	3000	3300
36	36	36	28.00	28.00	3160	6740	3160	3620
42	42	12	23.00	30.00	–	–	3165	3200
42	42	14	23.00	30.00	–	–	3170	3200
42	42	16	23.00	30.00	–	–	3180	3270
42	42	18	23.00	30.00	–	–	3185	3300
42	42	20	23.00	30.00	–	–	3205	3320
42	42	24	23.00	30.00	3245	–	3245	3395
42	42	30	31.00	31.00	4125	–	4125	4375
42	42	36	31.00	31.00	5360	–	5360	5720
42	42	42	31.00	31.00	5580	–	5585	6155
48	48	12	26.00	34.00	–	–	4315	4390
48	48	14	26.00	34.00	–	–	4315	4385
48	48	16	26.00	34.00	–	–	4330	4415
48	48	18	26.00	34.00	–	–	4330	4420
48	48	20	26.00	34.00	–	–	4350	4460
48	48	24	26.00	34.00	4385	–	4385	4535
48	48	30	26.00	34.00	4455	–	4455	4670
48	48	36	34.00	34.00	5555	–	5555	5880
48	48	42	34.00	34.00	7195	–	7195	9630
48	48	48	34.00	34.00	7385	–	7385	8005

* Not included in AWWA C110.

C110 DUCTILE IRON FULL BODY FITTINGS

CONCENTRIC REDUCER

			Domestic	Import
D	D1	L	Weight	Weight
3.00	2.00	6.00	17	–
4.00	2.00	7.00	23	–
4.00	3.00	7.00	29	30
6.00	2.00	9.00	30	–
6.00	3.00	9.00	44	40
6.00	4.00	9.00	46	45
6.00	5.00	9.00	56	–
8.00	3.00	11.00	61	65
8.00	4.00	11.00	63	–
8.00	5.00	11.00	70	–
8.00	6.00	11.00	75	75
10.00	4.00	12.00	98	85
10.00	6.00	12.00	107	90
10.00	8.00	12.00	116	110
12.00	4.00	14.00	119	120
12.00	6.00	14.00	130	130
12.00	8.00	14.00	152	145
12.00	10.00	14.00	178	170
14.00	6.00	16.00	165	155
14.00	8.00	16.00	185	175
14.00	10.00	16.00	205	190
14.00	12.00	16.00	235	220
16.00	6.00	18.00	210	190
16.00	8.00	18.00	230	210
16.00	10.00	18.00	255	235
16.00	12.00	18.00	285	265
16.00	14.00	18.00	315	280
18.00	8.00	19.00	265	240
18.00	10.00	19.00	290	265
18.00	12.00	19.00	320	295
18.00	14.00	19.00	350	310
18.00	16.00	19.00	405	340
20.00	10.00	20.00	418	–
20.00	12.00	20.00	465	345
20.00	14.00	20.00	430	355
20.00	16.00	20.00	445	390
20.00	18.00	20.00	470	410
24.00	12.00	24.00	608	480
24.00	14.00	24.00	565	490
24.00	16.00	24.00	610	525
24.00	18.00	24.00	645	550
24.00	20.00	24.00	695	590
30.00	16.00	30.00	945	–
30.00	18.00	30.00	970	810
30.00	20.00	30.00	1144	870
30.00	24.00	30.00	1155	970
36.00	20.00	36.00	–	1230
36.00	24.00	36.00	–	1345
36.00	30.00	36.00	–	1555
42.00	24.00	42.00	1810	1820
42.00	30.00	42.00	2060	2060
42.00	36.00	42.00	–	2345
48.00	30.00	48.00	2615	2625
48.00	36.00	48.00	2940	2950
48.00	42.00	48.00	3320	3320

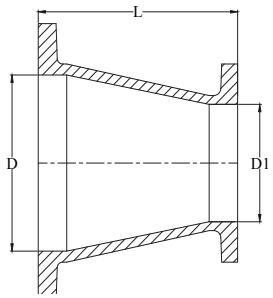

Concentric Reducer

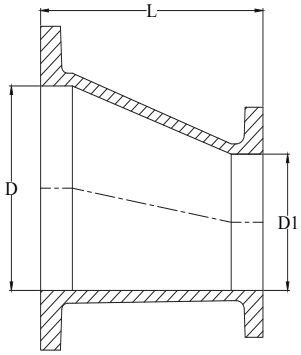

Eccentric Reducer

*ECCENTRIC REDUCER

			Domestic	Import
D	D1	L	Weight	Weight
4.00	3.00	7.00	30	–
6.00	3.00	9.00	45	–
6.00	4.00	9.00	52	45
8.00	4.00	11.00	70	–
8.00	6.00	11.00	80	–
10.00	4.00	12.00	95	–
10.00	6.00	12.00	98	–
10.00	8.00	12.00	123	–
12.00	4.00	14.00	120	–
12.00	6.00	14.00	135	–
12.00	8.00	14.00	149	–
12.00	10.00	14.00	177	–
14.00	6.00	16.00	165	–
14.00	8.00	16.00	185	–
14.00	10.00	16.00	205	–
14.00	12.00	16.00	294	–
16.00	6.00	18.00	210	–
16.00	8.00	18.00	230	–
16.00	10.00	18.00	255	–
16.00	12.00	18.00	285	–
16.00	14.00	18.00	315	–
18.00	8.00	19.00	265	–
18.00	10.00	19.00	290	–
18.00	12.00	19.00	306	–
18.00	14.00	19.00	350	–
18.00	16.00	19.00	385	–
20.00	10.00	20.00	350	–
20.00	12.00	20.00	370	–
20.00	14.00	20.00	402	–
20.00	16.00	20.00	449	–
20.00	18.00	20.00	455	–
24.00	12.00	24.00	535	–
24.00	14.00	24.00	570	–
24.00	16.00	24.00	614	–
24.00	18.00	24.00	645	–
24.00	20.00	24.00	695	–
30.00	16.00	30.00	778	–
30.00	18.00	30.00	810	–
30.00	20.00	30.00	870	–
30.00	24.00	30.00	970	–
36.00	24.00	36.00	1425	–
36.00	30.00	36.00	2120	–
42.00	24.00	42.00	2340	–
42.00	30.00	42.00	2060	–
42.00	36.00	42.00	2345	–
48.00	30.00	48.00	2625	–
48.00	36.00	48.00	2950	–
48.00	42.00	48.00	3320	–

*Eccentric Reducers not included in AWWA C110.

C110 DUCTILE IRON FULL BODY FITTINGS

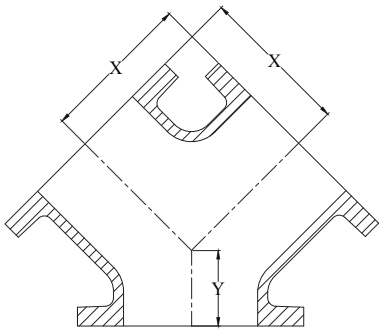

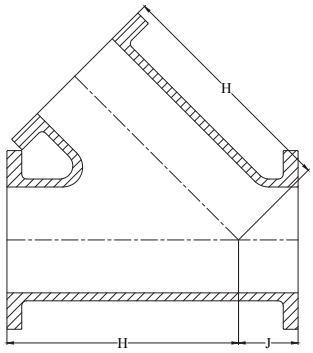

*TRUE WYES				
Sizes				Domestic
Stem	Branch	X	Y	Weight
4	4	6.50	3.00	49
6	4	8.00	3.50	75
6	6	8.00	3.50	84
8	6	9.00	4.50	134
8	8	9.00	4.50	125
10	6	8.00	5.00	140
10	8	9.00	5.00	155
10	10	11.00	5.00	220
12	8	9.00	5.50	210
12	10	11.00	5.50	240
12	12	12.00	5.50	315
16	16	13.00	6.50	520

*Not included in AWWA C110.

*WYES / LATERALS				
Sizes				Domestic
Run	Branch	H	J	Tee
3	3	10.00	3.00	49
4	3	12.00	3.00	68
4	4	12.00	3.00	76
6	4	14.50	3.50	106
6	6	14.50	3.50	131
8	4	17.50	4.50	153
8	6	17.50	4.50	188
8	8	17.50	4.50	201
10	4	20.50	5.00	232
10	6	20.50	5.00	288
10	8	20.50	5.00	333
10	10	20.50	5.00	300
12	4	24.50	5.50	355
12	6	24.50	5.50	370
12	8	24.50	5.50	395
12	10	24.50	5.50	420
12	12	24.50	5.50	460
14	6	27.00	6.00	500
14	8	27.00	6.00	525
14	10	27.00	6.00	555
14	12	27.00	6.00	600
14	14	27.00	6.00	640
16	6	30.00	6.50	655
16	8	30.00	6.50	680
16	10	30.00	6.50	715
16	12	30.00	6.50	755
16	14	30.00	6.50	800
16	16	30.00	6.50	850
18	8	32.00	7.00	820
18	10	32.00	7.00	855
18	12	32.00	7.00	1003
18	14	32.00	7.00	940
18	16	32.00	7.00	990
18	18	32.00	7.00	1035
20	10	35.00	8.00	1095
20	12	35.00	8.00	1130
20	14	35.00	8.00	1170
20	16	35.00	8.00	1220
20	20	35.00	8.00	1345
24	24	40.50	9.00	2020
36	36	60.00	19.50	5740

*Not included in AWWA C110.

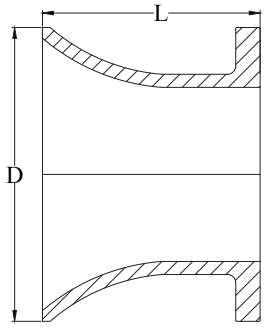

*FLANGE x FLARE PIECE			
Size	D	L	Weight
3	7.00	8.00	21
4	9.00	8.00	30
6	11.00	8.00	44
8	14.00	10.00	75
10	16.00	10.50	113
12	19.00	12.00	155
14	21.00	16.00	225
16	24.00	16.00	330
18	25.00	16.00	355
20	28.00	16.00	465
24	32.00	16.00	598
30	39.00	24.00	900
36	46.00	24.00	1200

*Not included in AWWA C110.

C110 DUCTILE IRON FULL BODY FITTINGS

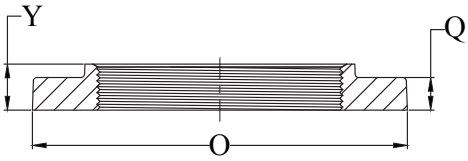

Flange for Steel Pipe
Reducing Flange for Steel Pipe

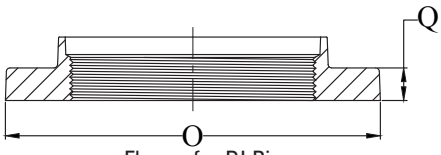

Flange for DI Pipe
Reducing Flange for DI Pipe

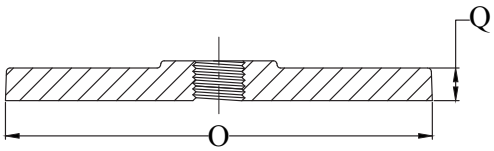

Under 12" Blind Flange
with Optional 2" Tap

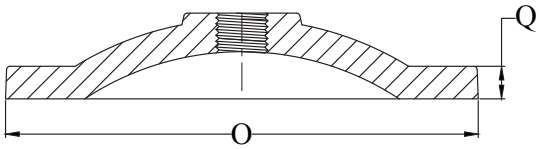

12" and Larger Blind Flange
with Optional 2" Tap

FLANGES

Sizes					Domestic Weight	Import Weight	Domestic Weight	Import Weight	Domestic Weight	Import Weight
Size	O	Q	Y	Z	Steel	Steel	DI	DI	Blind	Blind
2	6.00	0.62	1.00	4.75	4	–	–	–	–	–
2½	7.00	0.69	1.13	5.50	6	–	–	–	–	–
3	7.50	0.75	1.19	6.00	9	–	6	7	8	9
4	9.00	0.94	1.31	7.50	15	–	13	12	14	16
6	11.00	1.00	1.56	9.50	20	–	19	17	27	25
8	13.50	1.12	1.75	11.75	31	–	29	26	38	38
10	16.00	1.19	1.94	14.25	50	–	36	38	55	66
12	19.00	1.25	2.19	–	63	–	61	57	73	85
14	21.00	1.38	2.25	–	–	–	59	61	116	120
16	23.50	1.44	2.50	–	–	–	78	83	153	145
18	25.00	1.56	2.69	–	–	–	98	98	176	179
20	27.50	1.69	2.88	–	–	–	103	110	215	244
24	32.00	1.88	3.25	–	–	–	147	145	348	364
30	38.75	2.12	–	–	–	–	255	212	615	546
36	46.00	2.38	–	–	–	–	360	324	900	958
42	53.00	2.62	–	–	–	–	535	533	1300	1300
48	59.50	2.75	–	–	–	–	650	646	1620	1740

DI REDUCING FLANGE THREADED FOR STEEL PIPE

Size	Tap x O.D.	Domestic weight
4x3	3x9	16
6x4	4x11	25
8x4	4x13.5	44
8x6	6x13.5	31
10x6	6x16	50
12x6	6x19	60
10x8	8x16	55
12x10	10x19	72

DI REDUCING FLANGE THREADED FOR DUCTILE IRON PIPE

Size	Tap x O.D.	Weight
4x3	3x9	16
6x4	4x11	25
8x4	4x13.5	40
8x6	6x13.5	35
10x8	8x16	50
12x8	8x19	85

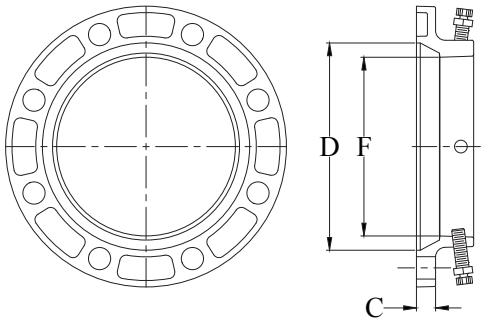

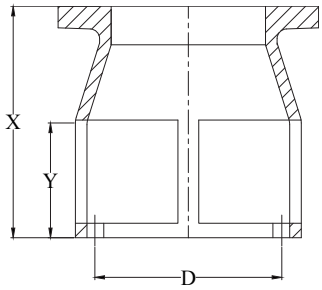

***FLANGE SLUDGE SHOE**

Size	D	X	Y	Domestic Weight
3	5.75	12.00	6.00	28
4	7.00	12.00	6.00	35
6	7.87	12.00	6.00	45
8	10.12	12.00	6.00	69
10	12.25	12.00	6.00	88
12	15.25	12.00	6.00	120

*Not included in AWWA C110.

ADAPTER FLANGE

Size	Rated Working Pressure	No. of Set Screws	Bolt Circle	Ductile Iron Pipe OD +.06 or -.06	D +.06 -.04	F +.07 -.03	C	Domestic Weight	Import Weight
3.00	250	4	6.00	3.96	4.94	4.06	0.94	7	6.5
4.00	250	4	7.50	4.80	6.02	4.90	1.00	8	8
6.00	250	8	9.50	6.90	8.12	7.00	1.06	12	12
8.00	250	8	11.75	9.05	10.27	9.15	1.12	18	18
10.00	250	12	14.25	11.10	12.34	11.20	1.19	28	28
12.00	150	12	17.00	13.20	14.44	13.30	1.25	40	34

All set screws are 5/8" 80lb. torque head.
Note: Recommended for class 53–class 56 wall thickness D.I. pipe.

C110 DUCTILE IRON FULL BODY FITTINGS

TAP LOCATIONS

Fittings can be supplied with tap sizes and located to ANSI B16.1 and MSS-SP-45. Specify fitting size, tap location by letter (refer to drawings below) and tap size by NPT dimension, on order.

NOTE: Boss is always required at location "Y" or "V" on straight and reducing sizes of 90° degree bends, and on tapered sides of reducers.

TAP LOCATIONS	
Fitting Size	Max Tap Without Boss
3	1/2
4–6	3/4
8	1 1/4
10–16	1 1/2
18–36	2

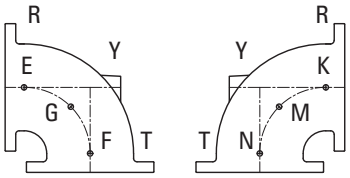

90° Bend, Straight Size

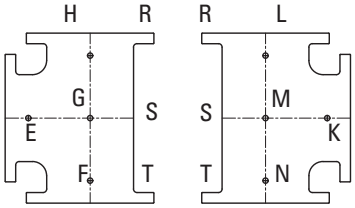

Tee, Straight Size

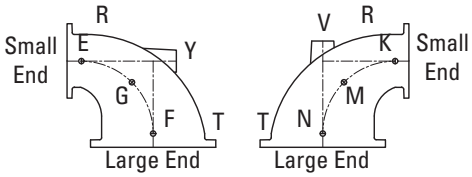

90° Bend, Reducing Size

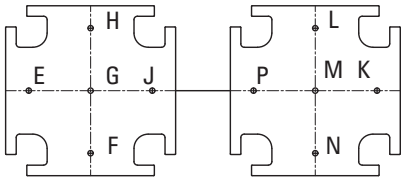

Cross, Straight Size

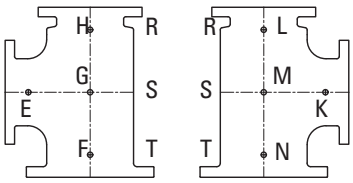

Tee, Reducing Size

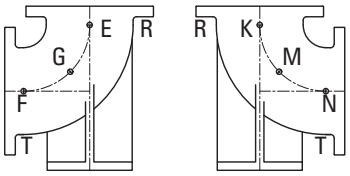

Base 90° Bend Elbow

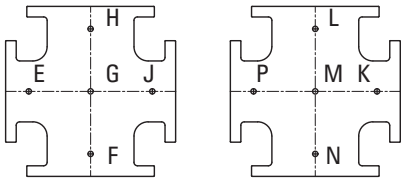

Cross, Reducing Size

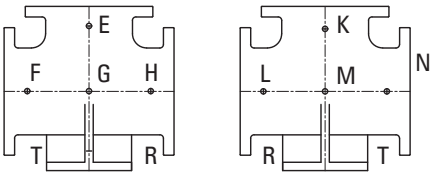

Base Tee

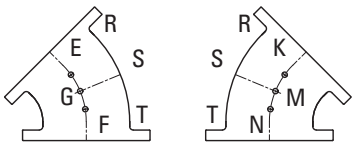

45° Bend

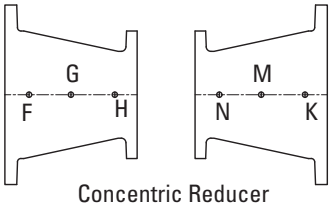

Concentric Reducer

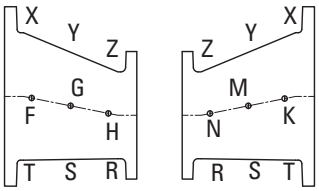

Eccentric Reducer

Flanged Fittings

ANSI/AWWA C110/A21.10

1" - 64" DUCTILE IRON FLANGED FITTINGS

GENERAL SPECIFICATIONS

MATERIAL: Ductile iron per ASTM A536

PRESSURE: 250 PSI ratiing for 1" - 48" sizes and 150 PSI rating for 54" - 64"

TESTING: In accordance with ANSI/AWWA C110/A21.10, UL and FM requirements

LAYING LENGTH: 2" - 48" sizes in accordance with ANSI/AWWA C110/A21.10 and ANSI B16.1 and 54" - 64" sizes in accordance with ANSI/AWWA C153/A21.53 (fittings not listed in ANSI/AWWA have dimensions per Star design as noted in the catalog)

WEIGHTS: Are in pounds, unless noted otherwise and do not include accessories, cement lining and coatings

DRILLING: In accordance with ANSI/AWWA C110/A21.10, ANSI/AWWA C153/A21.53 and ANSI B16.1 Class 125 Flanges

CEMENT LINING: In accordance with ANSI/AWWA C104/A21.4 -- sizes 1"- 3" single thickness and sizes 4"- 64" double thickness

COATING: Asphaltic seal coat inside in accordance with ANSI/AWWA C104/A21.4 and prime coat outside

APPROVALS: 4" - 12" Underwriters Laboratories Listed and Factory Mutual approved for 300 PSI rating
2" and greater are UL/NSF-61

DIMENSIONS: All dimensions are in inches unless noted otherwise

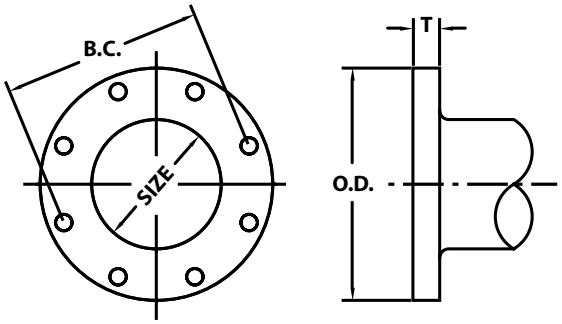

AWWA MEMBER

FM APPROVED

UL

CLASSIFIED UL WATER QUALITY

FLANGE DETAILS

	NOM. SIZE	O.D.	B.C.	T	BOLT HOLE DIA.	BOLTS SIZE	BOLTS NO.
★	1	4.25	3.12	0.44	0.62	½ x 2	4
★	1 ½	5.00	3.88	0.56	0.62	½ x 2	4
★	2	6.00	4.75	0.62	0.75	⅝ x 2 ¼	4
★	2 ½	7.00	5.50	0.69	0.75	⅝ x 2 ½	4
	3	7.50	6.00	0.75	0.75	⅝ x 2 ½	4
	4	9.00	7.50	0.94	0.75	⅝ x 3	8
★	5	10.00	8.50	0.94	0.88	¾ x 3	8
	6	11.00	9.50	1.00	0.88	¾ x 3 ½	8
	8	13.50	11.75	1.12	0.88	¾ x 3 ½	8
	10	16.00	14.25	1.19	1.00	⅞ x 4	12
	12	19.00	17.00	1.25	1.00	⅞ x 4	12
	14	21.00	18.75	1.38	1.13	1 x 4 ½	12
	16	23.50	21.25	1.44	1.13	1 x 4 ½	16
	18	25.00	22.75	1.56	1.25	1 ⅛ x 5	16
	20	27.50	25.00	1.69	1.25	1 ⅛ x 5	20
	24	32.00	29.50	1.88	1.38	1 ¼ x 5 ½	20
	30	38.75	36.00	2.12	1.38	1 ¼ x 6 ½	28
	36	46.00	42.75	2.38	1.63	1 ½ x 7	32
	42	53.00	49.50	2.62	1.63	1 ½ x 7 ½	36
	48	59.50	56.00	2.75	1.63	1 ½ x 8	44
★	54	66.25	62.75	3.00	2.00	1 ¾ x 8 ½	44
★	60	73.00	69.25	3.12	2.00	1 ¾ x 9	52
★	64	80.00	76.00	3.38	2.00	1 ¾ x 9	52

★Not Included in AWWA C110

STAR® PIPE PRODUCTS

Flanged Fittings

ANSI/AWWA C110/A21.10

METHOD OF DESIGNING OUTLETS OF REDUCING FITTINGS FOR SPECIFICATIONS

Reducing Tees

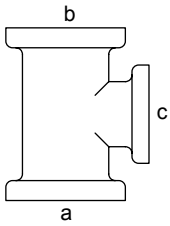

Reducing on Outlet

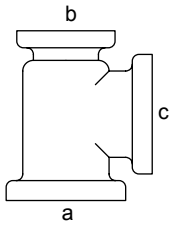

Reducing on One Run

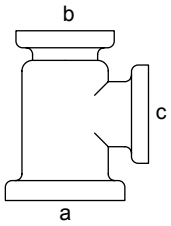

Reducing on One Run and Outlet

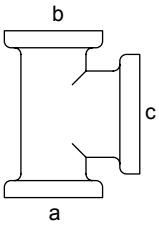

Reducing on Both Runs (Bull Head)

Reducing Crosses

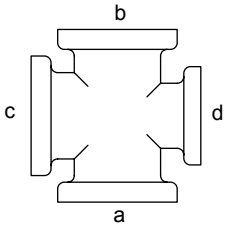

Reducing on One Outlet

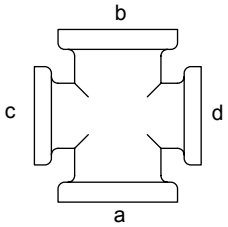

Reducing on Both Outlets

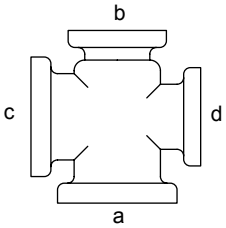

Reducing on One Run and Outlet

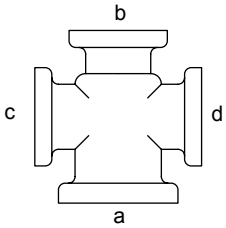

Reducing on One Run and Both Outlets

Reducing Laterals

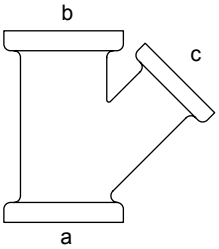

Reducing on Branch

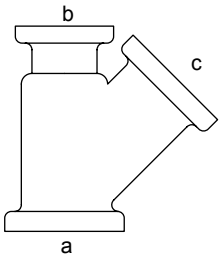

Reducing on One Run

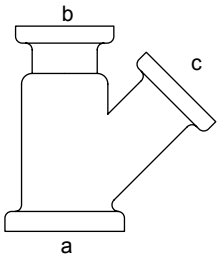

Reducing on One Run and Branch

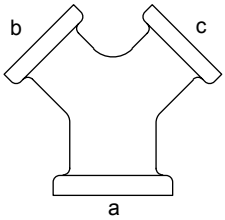

True Y

Side Outlet Tee

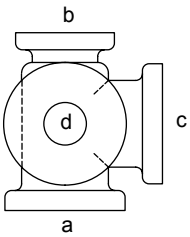

Right Hand

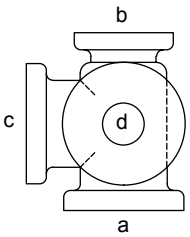

Left Hand

Double Branch Elbow

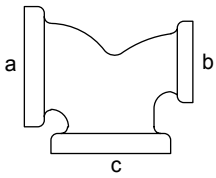

Side Outlet 90 deg. Elbow

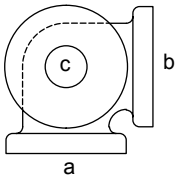

Right Hand

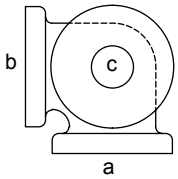

Left Hand

The largest opening establishes the basic size of a reducing fitting. The largest opening is named first, except for bull head tees which are reducing on both runs and double branch elbows where both branches are reducing; the outlet is the largest opening and named last in both cases.

In designating the opening of reducing fittings, they should be read in order indicated by the sequence of the letters a, b, c and d. In designating the outlets of side outlet of side outlet reducing fittings, the side outlet is named last; and in the case of the cross which is not shown, the side outlet is designated by the letter e.

STAR® PIPE PRODUCTS

Flanged Fittings

ANSI/AWWA C110/A21.10

METHOD OF DESIGNING LOCATION OF TAPPED HOLES FOR DRAINS WHEN SPECIFIED

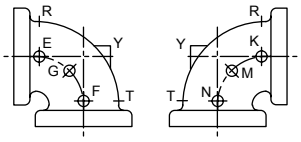

90 deg. Elbow
Straight Size

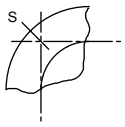

90 deg. Elbow

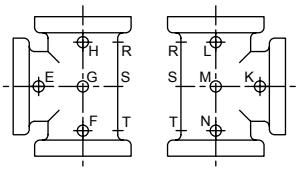

Tee
Straight Size

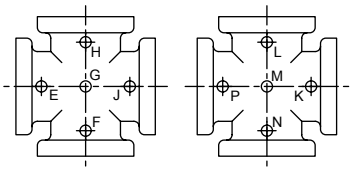

Cross
Straight Size

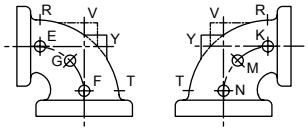

90 deg. Elbow
Reducing Size

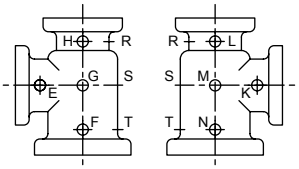

Tee
Reducing Size

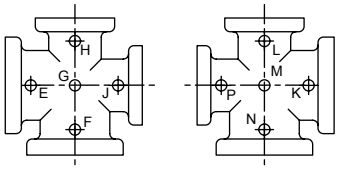

Cross
Reducing Size

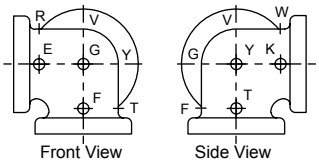

Side Outlet 90 deg. Elbow
Straight Size

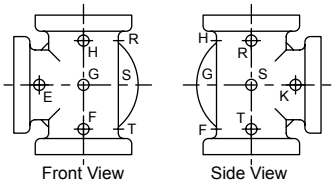

Side Outlet Tee
Straight Size

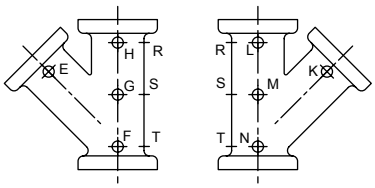

45 Deg. Lateral
Straight and Reducing

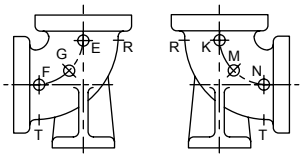

90 Deg. Base Elbow
Straight and Reducing

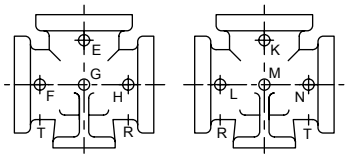

Base Tee

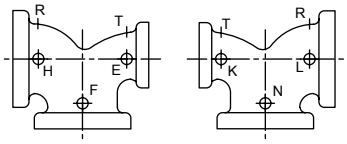

Double Branch Elbow

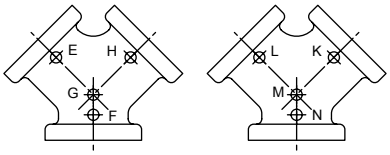

True Y

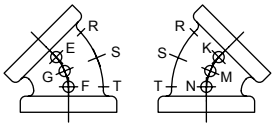

45 Deg. Elbow

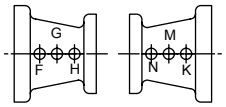

Reducer

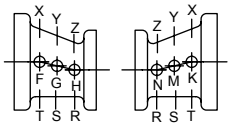

Eccentric Reducer

The above illustrations show two views of the same fitting and represent fittings with symmetrical shapes, with the exception of the side outlet elbow and the side outlet tee (straight sizes)

NOM. SIZE	MAX TAP SIZE WITHOUT BOSS
3	½
4-6	¾
8	1 ¼
10-16	1 ½
18-64	2

STAR® PIPE PRODUCTS

★Not Included in AWWA C110

FM Approvals
Quality System Registration
ISO 9001:2000

® REGISTERED TRADEMARK OF STAR PIPE PRODUCTS

STAR® PIPE PRODUCTS
HOUSTON **CORPORATE** |TOLL FREE 1-800-999-3009 |FAX 281-558-9000
www.starpipeproducts.com

Ductile Iron AWWA (Cast) Fittings

AWWA FITTINGS
Victaulic fittings for AWWA size pipe are supplied with rigid radius grooves in accordance with ANSI/AWWA C-606. Fittings conform to ANSI A21.10/AWWA C-110 for center-to-end dimensions and AWWA C-153 or ANSI A21.10/AWWA C-110 for wall thickness.

While most requirements are specified "black" or non-coated, fittings can be supplied with an alkyd-phenolic primer, or bituminous coating. Coal tar epoxy and other coatings are also available. The standard black asphalt coating used on our cement lined AWWA size fittings is NSF 61 Listed. Cast surfaces will be provided with surface equivalent to SSPC-SP6 prior to coating unless specified otherwise. Fittings are available with flanged ends wherever grooved ends are shown.

Linings include cement/mortar Type 2 (standard) and others. Fittings can readily be prepared for glass lining by others.

Fittings are rated for working pressures to 350 psi/2400 kPa (ductile iron) in 3 – 12"/80 – 300 mm sizes and to 250 psi/1725 kPa (gray iron) in sizes 3 – 12"/ 80 – 300 mm, and to 250 psi/1725 kPa (ductile iron), or 150 psi/1035 kPa (gray iron) for 14"/350 mm and larger. Victaulic fittings shown have an end-to-end dimension tolerance of ±⅛" in all sizes and styles.

CAST FITTINGS – TAPPED
Victaulic can supply tapped fittings on order to ANSI B16.1 dimension locations. Specify fitting size, tap location by letter on order.

BASE FITTINGS
Grooved end base 90° elbows and base tees are available with dimensions to ANSI B16.1.

MATERIAL SPECIFICATIONS

Fitting: Ductile iron conforming to ASTM A-536, Grade 65-45-12. Ductile iron conforming to ASTM A-395, grade 65-45-15 is available upon special request.

Fitting Coating: (specify choice*)

- **Standard on request:**
  - Non-coated
  - Alkyd-phenol primer
  - Bituminous coating
- **Optional:**
  - Coal tar epoxy coating
  - Cement/mortar lining – Type II
  - Glass Lining
  - Other linings available. Contact Victaulic.

* Coatings are applied per manufacturer's recommended mils.

JOB/OWNER	CONTRACTOR	ENGINEER
System No. _____	Submitted By _____	Spec Sect _____ Para _____
Location _____	Date _____	Approved _____
		Date _____

VICTAULIC IS A REGISTERED TRADEMARK OF VICTAULIC COMPANY. © 2007 VICTAULIC COMPANY. ALL RIGHTS RESERVED. PRINTED IN THE USA.

Ductile Iron AWWA (Cast) Fittings

DIMENSIONS

Elbows

NO. 100-C 90° Long Radius Elbow
NO. 10-C 90° Elbow
NO. 11-C 45° Elbow
NO. 12-C 22½° Elbow
NO. 13-C 11¼° Elbow

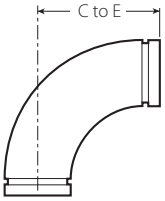

NO. 100-C

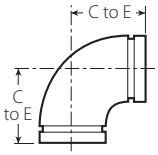

NO. 10-C

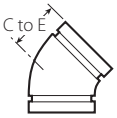

NO. 11-C

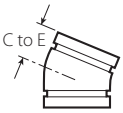

NO. 12-C

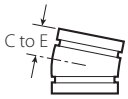

NO. 13-C

Size		No. 100-C 90° Long Radius Elbow		No. 10-C 90° Elbow		No. 11-C 45° Elbow		No. 12-C 22½° Elbow		No. 13-C 11¼° Elbow	
Nominal Size Inches/ mm	Actual Outside Dia. Inches mm	C to E Inches mm	Approx. Weight Each Lbs kg	C to E Inches mm	Approx. Weight Each Lbs. kg	C to E Inches mm	Approx. Weight Each Lbs. kg	C to E Inches mm	Approx. Weight Each Lbs. kg	C to E Inches mm	Approx. Weight Each Lbs. kg
3 80	3.960 100.6	7.75 197	19.3 8.8	5.50 140	8.6 3.9	3.00 76	5.8 2.6	3.00 76	12.5 5.7	3.00 76	9.0 4.1
4 100	4.800 121.9	9.00 229	28.0 12.7	6.50 165	12.0 5.4	4.00 102	8.4 3.8	4.00 102	11.5 5.2	4.00 102	11.5 5.2
6 150	6.900 175.3	11.50 292	55.0 25.0	8.00 203	22.0 10.0	5.00 127	15.0 6.8	5.00 127	25.0 11.3	5.00 127	21.5 9.8
8 200	9.050 229.9	14.00 356	83.0 37.7	9.00 229	38.0 17.2	5.50 140	28.8 13.1	5.50 140	39.5 17.9	5.50 140	39.0 17.7
10 250	11.100 281.9	16.50 419	160.0 72.6	11.00 279	76.0 34.5	6.50 165	43.3 19.6	6.50 165	67.0 30.4	6.50 165	77.0 34.9
12 300	13.200 335.3	19.00 483	210.0 95.3	12.00 305	92.0 41.7	7.50 191	72.0 32.7	7.50 191	108.0 49.0	7.50 191	120.0 54.4
14 350	15.300 388.6	21.50 546	261.0 118.4	14.00 356	174.0 78.9	7.50 191	104.0 47.2	7.50 191	92.0 41.7	7.50 191	101.0 45.8
16 400	17.400 442.0	24.00 610	337.0 152.9	15.00 381	239.0 108.4	8.00 203	142.0 64.4	8.00 203	112.0 50.8	8.00 203	121.0 54.9
18 450	19.500 495.3	26.50 673	451.0 204.6	16.50 419	328.0 148.8	8.50 216	186.0 84.4	8.50 216	145.0 65.8	8.50 216	146.0 66.2
20 500	21.600 548.6	29.00 737	588.0 266.7	18.00 457	413.0 187.3	9.50 241	246.0 111.6	9.50 241	200.0 90.7	9.50 241	202.0 91.6
24 600	25.800 655.3	34.00 864	909.0 412.3	22.00 559	668.0 303.0	11.00 279	414.0 187.8	11.00 279	282.0 127.9	11.00 279	284.0 128.8
30 750	32.000 762.0	41.50 1054	2136.0 968.9	25.00 635	1002.0 454.4	15.00 381	720.0 326.6	15.00 381	681.0 308.9	15.00 381	699.0 317.1
36 900	38.300 914.4	49.00 1245	3120.0 1415.2	28.00 711	1608.0 729.4	18.00 457	1152.0 522.6	18.00 457	975.0 442.3	18.00 457	1124.0 509.8

VICTAULIC IS A REGISTERED TRADEMARK OF VICTAULIC COMPANY. © 2007 VICTAULIC COMPANY. ALL RIGHTS RESERVED. PRINTED IN THE USA.

Ductile Iron AWWA (Cast) Fittings

Tee, True Wye, Cross, Lateral, and Cap

NO. 20-C Tee
NO. 33-C True Wye
NO. 35-C Cross
NO. 30-C 45° Lateral
NO. 60-C Cap

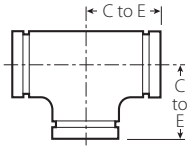

NO. 20-C

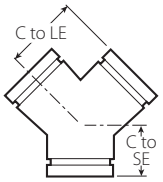

NO. 33-C

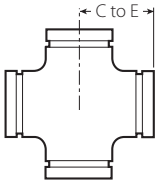

NO. 35-C

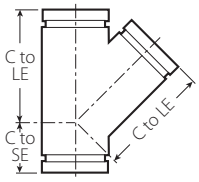

NO. 30-C

NO. 60-C

Size		No. 20-C Tee		No. 33-C True Wye			No. 35-C Cross		No. 30-C 45° Lateral			No. 60-C Cap†	
Nominal Size Inches/ mm	Actual Outside Dia. Inches mm	C to E Inches mm	Approx. Wgt. Each Lbs. kg	C to LE Inches mm	C to SE Inches mm	Approx. Wgt. Each Lbs. kg	C to E Inches mm	Approx. Wgt. Each Lbs. kg	C to LE Inches mm	C to SE Inches mm	Approx. Wgt. Each Lbs. kg	T Thickness Inches mm	Approx. Wgt. Each Lbs. kg
3 80	3.960 100.6	5.50 140	14.2 6.4	5.50 140	3.00 76	25.00 635	5.50 140	24.0 10.9	10.00 254	3.00 76	28.0 12.7	1.22 31	3.0 1.4
4 100	4.800 121.9	6.50 165	19.0 8.6	6.50 165	3.00 76	55.0 25.0	6.50 165	40.0 18.1	12.00 305	3.00 76	38.4 12.7	1.16 29	5.0 2.3
6 150	6.900 175.3	8.00 203	34.0 15.4	8.00 203	3.50 89	90.0 40.8	8.00 203	71.0 32.2	14.50 368	3.50 89	67.0 30.4	1.16 29	9.0 4.1
8 200	9.050 229.9	9.00 229	59.0 26.8	9.00 229	4.50 114	140.0 63.5	9.00 229	106.0 48.1	17.50 445	4.50 114	120.0 54.4	1.34 34	16.0 7.3
10 250	11.100 281.9	11.00 279	111.0 50.4	11.00 279	5.00 127	220.0 99.8	11.00 279	225.0 102.1	20.50 521	5.00 127	215.0 97.5	1.53 39	37.2 16.9
12 300	13.200 335.3	12.00 305	136.0 61.7	12.00 305	5.50 140	315.0 142.9	12.00 305	310.0 140.6	24.50 622	5.50 140	346.0 157.0	1.53 39	52.0 23.6
14 350	15.300 388.6	14.00 356	262.0 118.8	14.00 356	6.00 152	+	14.00 356	307.0 139.3	27.00 686	6.00 152	492.0 223.2	2.75* 70	55.0 25.0
16 400	17.400 442.0	15.00 381	304.0 137.9	15.00 381	6.50 165	+	15.00 381	426.0 193.2	30.00 762	6.50 165	696.0 315.7	2.75* 70	68.0 30.9
18 450	19.500 495.3	16.50 419	408.0 185.1	16.50 419	7.00 178	+	16.50 419	567.0 254.9	32.00 813	7.00 178	870.0 394.6	2.75* 70	90.0 40.8
20 500	21.600 548.6	18.00 457	552.0 250.4	18.00 457	8.00 203	+	18.00 457	717.0 325.2	35.00 889	8.00 203	1103.0 500.3	2.75* 70	110.0 50.0
24 600	25.800 655.3	22.00 559	980.0 444.5	22.00 559	9.00 229	+	22.00 559	1177.0 533.9	40.50 1029	9.00 229	1746.0 792.0	2.75* 70	165.0 74.8
30 750	32.000 762.0	25.00 635	1552.0 704.0	25.00 635	10.00 254	+	25.00 635	1366.0 619.6	49.00 1245	10.00 254	3280.0 1487.8	4.00* 102	300.0 136.1
36 900	38.300 914.4	28.00 711	2050.0 929.9	28.00 711	15.00 381	+	28.00 711	1885.0 855.0	56.00 1422	15.25 387	5020.0 2277.1	4.00* 102	536.0 243.1

* Dish caps. + Contact Victaulic for details.
† Caps from ½ – 3"/15 – 80 mm tap sizes.

Bullhead Tee

NO. 21-C

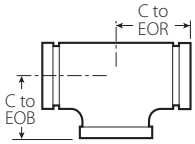

NO. 21-C

Size					Dimensions – Inches/mm		Approx. Weight Each
Nominal Size Inches/ mm					C to EOR	C to EOB	Lbs. kg
4 100	×	4 100	×	6 150	+	+	47.0 21.3
6 150	×	6 150	×	8 200	8.00 203	8.00 203	79.0 35.8
8 200	×	8 200	×	10 250	11.00 279	11.00 279	164.0 74.4
10 250	×	10 250	×	12 300	+	+	226.0 102.5

+ Contact Victaulic for details.

VICTAULIC IS A REGISTERED TRADEMARK OF VICTAULIC COMPANY. © 2007 VICTAULIC COMPANY. ALL RIGHTS RESERVED. PRINTED IN THE USA.

Ductile Iron AWWA (Cast) Fittings

Reducing Fittings

NO. 25-C Reducing Tee
NO. 35-CR Reducing Cross
NO. 30-CR 45° Reducing Lateral

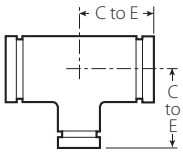

NO. 25-C

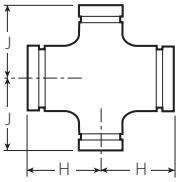

NO. 35-CR

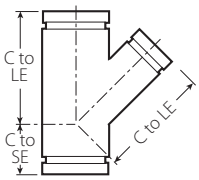

NO. 30-CR

Size			No. 25-C Reducing Tee			No. 35-CR Reducing Cross			No. 30-CR 45° Reducing Lateral		
Nominal Size Inches/ mm			C to EOR Inches mm	C to EOB Inches mm	Approx. Weight Each Lbs. kg	H Inches mm	J Inches mm	Approx. Weight Each Lbs. kg	C to LE Inches mm	C to SE Inches mm	Approx. Weight Each Lbs. kg
4 100	×	3 80	6.50 165	6.50 165	26.4 12.0	6.50 165	6.50 165	22.0 10.0	12.00 305	3.00 76	45.0 20.4
6 150	×	3 80	8.00 203	8.00 203	30.0 13.6	8.00 203	8.00 203	46.0 20.9	14.50 368	3.50 89	74.0 33.6
		4 100	8.00 203	8.00 203	34.0 15.4	8.00 203	8.00 203	38.0 17.2	14.50 368	3.50 89	80.0 36.3
8 200	×	3 80	9.00 229	9.00 229	+	—	—	—	—	—	—
		4 100	9.00 229	9.00 229	78.0 35.4	9.00 229	9.00 229	76.0 34.5	17.50 445	4.50 114	125.0 56.7
		6 150	9.00 229	9.00 229	80.0 36.3	9.00 229	9.00 229	59.0 26.8	17.50 445	4.50 114	140.0 63.5
10 250	×	4 100	11.00 279	11.00 279	120.0 54.4	11.00 279	11.00 279	120.0 54.4	20.50 521	5.00 127	204.0 92.5
		6 150	11.00 279	11.00 279	128.0 58.1	11.00 279	11.00 279	114.0 51.7	20.50 521	5.00 127	212.0 96.2
		8 200	11.00 279	11.00 279	130.0 59.0	11.00 279	11.00 279	123.0 56.8	20.50 521	5.00 127	236.0 107.1
12 300	×	4 100	12.00 305	12.00 305	112.0 50.8	12.00 305	12.00 305	174.0 78.9	24.50 622	5.50 140	290.0 131.5
		6 150	12.00 305	12.00 305	180.0 81.7	12.00 305	12.00 305	130.0 59.0	24.50 622	5.50 140	302.0 137.0
		8 200	12.00 305	12.00 305	186.0 84.4	12.00 305	12.00 305	139.0 63.1	24.50 622	5.50 140	324.0 147.0
		10 250	12.00 305	12.00 305	192.0 87.1	12.00 305	12.00 305	154.0 69.9	24.50 622	5.50 140	356.0 161.5
14 350	×	6 150	14.00 356	14.00 356	238.0 108.0	14.00 356	14.00 356	215.0 97.5	27.00 686	6.00 152	330.0 149.7
		8 200	14.00 356	14.00 356	241.0 109.3	14.00 356	14.00 356	221.0 100.3	27.00 686	6.00 152	346.0 156.9
		10 250	14.00 356	14.00 356	258.0 114.8	14.00 356	14.00 356	235.0 106.6	27.00 686	6.00 152	540.0 244.9
		12 300	14.00 356	14.00 356	267.0 121.1	14.00 356	14.00 356	244.0 110.7	27.00 686	6.00 152	625.0 283.5
16 400	×	6 150	15.00 381	15.00 381	288.0 130.6	15.00 381	15.00 381	266.0 120.7	30.00 762	6.50 165	570.0 258.6
		8 200	15.00 381	15.00 381	315.0 142.9	15.00 381	15.00 381	276.0 125.2	30.00 762	6.50 165	585.0 265.4
		10 250	15.00 381	15.00 381	319.0 144.7	15.00 381	15.00 381	291.0 132.0	30.00 762	6.50 165	630.0 285.8
		12 300	15.00 381	15.00 381	330.0 149.7	15.00 381	15.00 381	305.0 138.4	30.00 762	6.50 165	650.0 294.8
		14 350	15.00 381	15.00 381	341.0 154.7	15.00 381	15.00 381	280.0 127.0	30.00 762	6.50 165	692.0 313.9

TABLE CONTINUED ON NEXT PAGE

VICTAULIC IS A REGISTERED TRADEMARK OF VICTAULIC COMPANY. © 2007 VICTAULIC COMPANY. ALL RIGHTS RESERVED. PRINTED IN THE USA.

Ductile Iron AWWA (Cast) Fittings

Reducing Fittings

NO. 25-C Reducing Tee
NO. 35-CR Reducing Cross
NO. 30-CR 45º Reducing Lateral

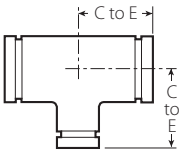

NO. 25-C

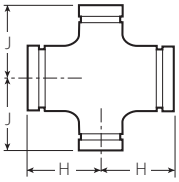

NO. 35-CR

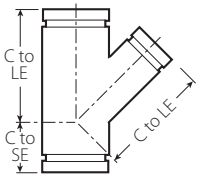

NO. 30-CR

Size			No. 25-C Reducing Tee			No. 35-CR Reducing Cross			No. 30-CR 45° Reducing Lateral		
Nominal Size Inches/ mm			C to EOR Inches mm	C to EOB Inches mm	Approx. Weight Each Lbs. kg	H Inches mm	J Inches mm	Approx. Weight Each Lbs. kg	C to LE Inches mm	C to SE Inches mm	Approx. Weight Each Lbs. kg
18 450	×	8 200	13.00 330	15.50 394	326.0 147.9	13.00 330	15.50 394	272.0 123.4	+	+	+
		10 250	13.00 330	15.50 394	332.0 150.6	13.00 330	15.50 394	277.0 125.6	32.00 813	7.00 178	765.0 347.0
		12 300	13.00 330	15.50 394	339.0 153.8	13.00 330	15.50 394	291.0 132.0	32.00 813	7.00 178	800.0 362.9
		14 350	16.50 419	16.50 419	441.0 200.0	16.50 419	16.50 419	361.0 163.7	32.00 813	7.00 178	865.0 392.4
		16 400	16.50 419	16.50 419	453.0 205.5	16.50 419	16.50 419	367.0 166.5	32.00 813	7.00 178	895.0 406.0
20 500	×	6 150	14.00 356	17.00 432	+	—	—	—	—	—	—
		8 200	14.00 356	17.00 432	412.0 186.9	14.00 356	17.00 432	343.0 155.6	—	—	—
		10 250	14.00 356	17.00 432	419.0 190.1	14.00 356	17.00 432	343.0 155.6	+	+	+
		12 300	14.0 356	17.00 432	426.0 193.2	14.00 356	17.00 432	357.0 161.9	35.00 889	8.00 203	1000.0 453.6
		14 350	14.00 356	17.00 432	443.0 201.0	14.00 356	17.00 432	327.0 148.3	35.00 889	8.00 203	1062.0 481.7
		16 400	18.00 457	18.00 457	571.0 259.0	18.00 457	18.00 457	458.0 207.7	35.00 889	8.00 203	1105.0 501.2
		18 450	18.00 457	18.00 457	584.0 264.9	18.00 457	18.00 457	469.0 212.7	35.00 889	8.00 203	1150.0 521.6
24 600	×	6 150	15.00 381	19.00 483	+	—	—	—	—	—	—
		8 200	15.00 381	19.00 483	+	+	+	+	+	+	+
		10 250	15.00 381	19.00 483	+	+	+	+	+	+	+
		12 300	15.00 381	19.00 483	593.0 269.0	15.00 381	19.00 483	475.0 215.5	+	+	+
		14 350	15.00 381	19.00 483	610.0 276.7	15.00 381	19.00 483	450.0 204.1	40.50 1029	9.00 229	1510.0 684.9
		16 400	15.00 381	19.00 483	620.0 281.2	15.00 381	19.00 483	446.0 202.3	40.50 1029	9.00 229	1580.0 716.7
		18 450	22.00 559	22.00 559	918.0 416.4	22.00 559	22.00 559	782.0 354.7	40.50 1029	9.00 229	871.0 395.1
		20 500	22.00 559	22.00 559	937.0 425.0	22.00 559	22.00 559	788.0 357.4	40.50 1029	9.00 229	1705.0 773.4

TABLE CONTINUED ON NEXT PAGE

VICTAULIC IS A REGISTERED TRADEMARK OF VICTAULIC COMPANY. © 2007 VICTAULIC COMPANY. ALL RIGHTS RESERVED. PRINTED IN THE USA.

Ductile Iron AWWA (Cast) Fittings

Reducing Fittings

NO. 25-C Reducing Tee
NO. 35-CR Reducing Cross
NO. 30-CR 45° Reducing Lateral

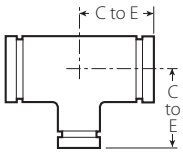

NO. 25-C

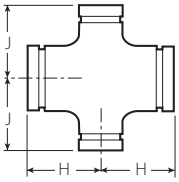

NO. 35-CR

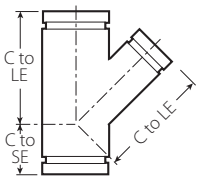

NO. 30-CR

Size			No. 25-C Reducing Tee			No. 35-CR Reducing Cross			No. 30-CR 45° Reducing Lateral		
Nominal Size Inches/ mm			C to EOR Inches mm	C to EOB Inches mm	Approx. Weight Each Lbs. kg	H Inches mm	J Inches mm	Approx. Weight Each Lbs. kg	C to LE Inches mm	C to SE Inches mm	Approx. Weight Each Lbs. kg
30 750	×	6 150	18.00 457	23.00 584	+	18.00 457	23.00 584	—	—	—	—
		8 200	18.00 457	23.00 584	+	18.00 457	23.00 584	+	+	+	+
		10 250	18.00 457	23.00 584	+	18.00 457	23.00 584	+	+	+	+
		12 300	18.00 457	23.00 584	1175.0 533.0	18.00 457	23.00 584	888.0 402.8	49.00 1245	10.00 254	2178.0 987.9
		14 350	18.00 457	23.00 584	1250.0 567.0	18.00 457	23.00 584	853.0 386.9	49.00 1245	10.00 254	2208.0 1001.5
		16 400	18.00 457	23.00 584	1437.0 651.0	18.00 457	23.00 584	843.0 382.4	49.00 1245	10.00 254	2248.0 1019.7
		18 450	18.00 457	23.00 584	1450.0 657.7	18.00 457	23.00 584	839.0 380.6	49.00 1245	10.00 254	2294.0 1040.6
		20 500	18.00 457	23.00 584	1462.0 663.2	18.00 457	23.00 584	835.0 378.8	49.00 1245	10.00 254	2339.0 1061.0
		24 600	25.00 635	25.00 635	1475.0 669.1	25.00 635	25.00 635	1304.0 591.5	49.00 1245	10.00 254	2451.0 1111.8
36 900	×	8 200	20.00 508	26.0 660	+	20.00 508	26.00 660	+	+	+	+
		10 250	20.00 508	26.00 660	+	20.00 508	26.00 660	+	+	+	+
		12 300	20.00 508	26.00 660	+	20.00 508	26.00 660	1262.0 572.4	+	+	+
		14 350	20.00 508	26.00 660	+	20.00 508	26.00 660	1222.0 554.3	54.00 1372	15.25 387	+
		16 400	20.00 508	26.00 660	+	20.00 508	26.00 660	1213.0 550.2	54.00 1372	15.25 387	3493.0 1584.4
		18 450	20.00 508	26.00 660	+	20.00 508	26.00 660	1204.0 546.1	54.00 1372	15.25 387	3533.0 1602.6
		20 500	20.00 508	26.00 660	+	20.00 508	26.00 660	1190.0 539.8	54.00 1372	15.25 387	3574.0 1621.2
		24 600	20.00 508	26.00 660	+	20.00 508	26.00 660	1163.0 527.5	54.00 1372	15.25 387	3675.0 1667.0
		30 750	28.00 711	28.00 711	+	28.00 711	28.00 711	1865.0 846.0	56.00 1422	15.25 387	3879.0 1759.5

+ Contact Victaulic for details.

IMPORTANT NOTE:
Non-standard reducing cross sizes are available. Contact Victaulic for details.

VICTAULIC IS A REGISTERED TRADEMARK OF VICTAULIC COMPANY. © 2007 VICTAULIC COMPANY. ALL RIGHTS RESERVED. PRINTED IN THE USA.

Ductile Iron AWWA (Cast) Fittings

Reducers and Reducing Elbows

NO. 50-C Concentric Reducer
NO. 51-C Eccentric Reducer
NO. 10-CR 90° Reducing Elbow
NO. 100-CR 90° Long Radius Reducing Elbow

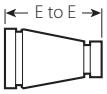

NO. 50-C

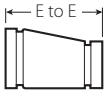

NO. 51-C

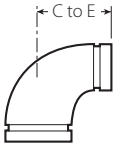

NO. 10-CR

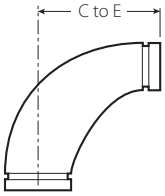

NO. 100-CR

Size		No. 50-C Concentric Reducer		No. 51-C Eccentric Reducer		No. 10-CR 90° Reducing Elbow		No. 100-CR 90° Long Radius Red. El.	
Nominal Size Inches/ mm		E to E Inches mm	Approx. Weight Each Lbs. kg	E to E Inches mm	Approx. Weight Each Lbs. kg	C to E Inches mm	Approx. Weight Each Lbs. kg	C to E Inches mm	Approx. Weight Each Lbs. kg
4 100	× 3 80	7.00 178	10.0 4.5	7.00 178	12.0 5.4	6.50 165	17.0 7.7	9.00 229	20.0 8.1
6 150	× 3 80	9.00 229	15.0 6.8	9.00 229	20.0 9.1	8.00 203	28.5 12.9	11.50 292	36.0 16.3
	4 100	9.00 229	16.5 7.5	9.00 229	25.0 11.3	8.00 203	29.6 13.4	11.50 292	40.0 18.1
8 200	× 3 80	11.00 279	33.0 15.0	11.00 279	+	—	—	—	—
	4 100	11.00 279	28.0 12.7	11.00 279	35.0 15.9	9.00 229	46.5 21.1	14.00 356	60.0 27.2
	6 150	11.00 279	34.0 15.4	11.00 279	44.0 20.0	9.00 229	48.5 22.0	14.00 356	71.0 32.2
10 250	× 4 100	12.00 305	42.0 19.1	12.00 305	54.0 24.5	11.00 279	68.0 30.8	16.50 419	90.0 40.8
	6 150	12.00 305	46.0 20.9	12.00 305	60.0 27.2	11.00 279	77.0 34.9	16.50 419	106.0 48.1
	8 200	12.00 305	50.0 22.7	12.00 305	70.0 31.8	11.00 279	88.0 39.9	16.50 419	121.0 54.9
12 300	× 4 100	14.00 356	60.0 27.2	14.00 356	82.0 37.2	12.00 305	+	+	+
	6 150	14.00 356	70.0 31.8	14.00 356	84.0 38.1	12.00 305	110.0 49.9	19.00 483	143.0 64.9
	8 200	14.00 356	74.0 33.6	14.00 356	91.0 41.3	12.00 305	126.0 57.2	19.00 483	163.0 73.9
	10 250	14.00 356	84.0 38.1	14.00 356	110.0 49.9	12.00 305	150.0 68.0	19.00 483	188.0 85.3
14 350	× 6 150	16.00 406	89.0 40.4	16.00 406	104.0 47.2	14.00 356	+	+	+
	8 200	16.00 406	102.0 46.3	16.00 406	121.0 54.9	14.00 356	135.0 61.2	21.50 546	183.0 83.0
	10 250	16.00 406	112.0 50.8	16.00 406	135.0 61.2	14.00 356	170.0 77.1	21.50 546	213.0 96.6
	12 300	16.00 406	126.0 57.4	16.00 406	150.0 68.0	14.00 356	195.0 88.5	21.50 546	240.0 108.9
16 400	× 6 150	18.00 457	11.0 49.9	18.00 457	140.0 63.5	—	—	+	+
	8 200	18.00 457	122.0 55.3	18.00 457	160.0 72.6	15.00 381	+	24.00 610	228.0 103.4
	10 250	18.00 457	135.0 61.2	18.00 457	168.0 76.2	15.00 381	195.0 88.5	24.00 610	263.0 119.3
	12 300	18.00 457	146.0 66.2	18.00 457	190.0 86.2	15.00 381	240.0 108.9	24.00 610	295.0 133.8
	14 350	18.00 457	173.0 78.5	18.00 457	210.0 95.3	15.00 381	280.0 127.0	24.00 610	290.0 131.5

TABLE CONTINUED ON NEXT PAGE

VICTAULIC IS A REGISTERED TRADEMARK OF VICTAULIC COMPANY. © 2007 VICTAULIC COMPANY. ALL RIGHTS RESERVED. PRINTED IN THE USA.

Ductile Iron AWWA (Cast) Fittings

Reducers and Reducing Elbows

NO. 50-C Concentric Reducer
NO. 51-C Eccentric Reducer
NO. 10-CR 90° Reducing Elbow
NO. 100-CR 90° Long Radius Reducing Elbow

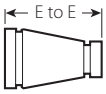

NO. 50-C

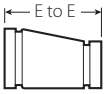

NO. 51-C

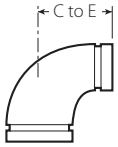

NO. 10-CR

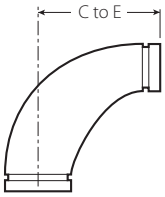

NO. 100-CR

Size		No. 50-C Concentric Reducer		No. 51-C Eccentric Reducer		No. 10-CR 90° Reducing Elbow		No. 100-CR 90° Long Radius Red. El.	
Nominal Size Inches/ mm		E to E Inches mm	Approx. Weight Each Lbs. kg	E to E Inches mm	Approx. Weight Each Lbs. kg	C to E Inches mm	Approx. Weight Each Lbs. kg	C to E Inches mm	Approx. Weight Each Lbs. kg
18 450	× 8 200	19.00 483	148.0 67.1	19.00 483	180.0 81.6	16.50 419	+	—	—
	10 250	19.00 483	158.0 71.1	19.00 483	215.0 97.5	16.50 419	+	26.50 673	+
	12 300	19.00 483	173.0 78.5	19.00 483	215.0 97.5	16.50 419	305.0 138.3	26.50 673	336.0 152.4
	14 350	19.00 483	200.0 90.7	19.00 483	230.0 104.3	16.50 419	345.0 156.5	26.50 673	355.0 161.0
	16 400	19.00 483	220.0 100.0	19.00 483	275.0 124.7	16.50 419	360.0 163.3	26.50 673	386.0 175.1
20 500	× 8 200	20.00 508	173.0 78.5	20.00 508	+	—	—	—	—
	10 250	20.00 508	182.0 82.6	20.00 508	215.0 97.5	18.00 457	+	29.00 737	+
	12 300	20.00 508	201.0 91.2	20.00 508	250.0 113.4	18.00 457	365.0 165.6	29.00 737	+
	14 350	20.00 508	230.0 104.3	20.00 508	270.0 122.5	18.00 457	405.0 183.7	29.00 737	+
	16 400	20.00 508	251.0 113.9	20.00 508	300.0 136.1	18.00 457	440.0 199.6	29.00 737	466.0 211.4
	18 450	20.00 508	275.0 124.7	20.00 508	320.0 145.2	18.00 457	485.0 220.0	29.00 737	507.0 230.0
24 600	× 8 200	24.00 610	257.0 116.6	24.00 610	300.0 136.1	+	+	+	+
	10 250	24.00 610	274.0 124.3	24.00 610	300.0 136.1	+	+	+	+
	12 300	24.00 610	293.0 132.9	24.00 610	395.0 179.2	22.00 559	590.0 267.6	34.00 864	+
	14 350	24.00 610	331.0 150.1	24.00 610	425.0 192.8	22.00 559	630.0 285.8	34.00 864	+
	16 400	24.00 610	358.0 162.4	24.00 610	455.0 206.4	22.00 559	690.0 313.0	34.00 864	658.0 298.5
	18 450	24.00 610	386.0 175.1	24.00 610	465.0 210.9	22.00 559	735.0 333.4	34.00 864	+
	20 500	24.00 610	418.0 189.6	24.00 610	525.0 238.1	22.00 559	815.0 369.7	34.00 864	759.0 344.3

TABLE CONTINUED ON NEXT PAGE

VICTAULIC IS A REGISTERED TRADEMARK OF VICTAULIC COMPANY. © 2007 VICTAULIC COMPANY. ALL RIGHTS RESERVED. PRINTED IN THE USA.

Ductile Iron AWWA (Cast) Fittings

Reducers and Reducing Elbows

NO. 50-C Concentric Reducer
NO. 51-C Eccentric Reducer
NO. 10-CR 90° Reducing Elbow
NO. 100-CR 90° Long Radius Reducing Elbow

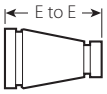

NO. 50-C

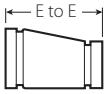

NO. 51-C

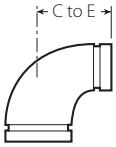

NO. 10-CR

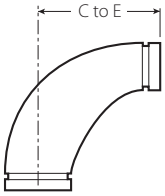

NO. 100-CR

Size		No. 50-C Concentric Reducer		No. 51-C Eccentric Reducer		No. 10-CR 90° Reducing Elbow		No. 100-CR 90° Long Radius Red. El.	
Nominal Size Inches/ mm		E to E Inches mm	Approx. Weight Each Lbs. kg	E to E Inches mm	Approx. Weight Each Lbs. kg	C to E Inches mm	Approx. Weight Each Lbs. kg	C to E Inches mm	Approx. Weight Each Lbs. kg
30 750	× 8 200	+	+	+	+	+	+	—	—
	10 250	+	+	+	+	+	+	—	—
	12 300	30.00 762	+	30.00 762	+	+	+	—	—
	14 350	30.00 762	+	30.00 762	+	25.00 635.0	+	—	—
	16 400	30.00 762	+	30.00 762	+	25.00 635.0	+	41.50 1054	+
	18 450	30.00 762	+	30.00 762	+	25.00 635.0	+	41.50 1054	+
	20 500	30.00 762	+	30.00 762	+	25.00 635.0	+	41.50 1054	+
	24 600	30.00 762	+	30.00 762	+	25.00 635.0	1170.0 530.7	41.50 1054	+
36 900	× 8 200	+	+	+	+	+	+	—	—
	10 250	+	+	+	+	+	+	—	—
	12 300	+	+	+	+	+	+	—	—
	14 350	36.00 914	+	36.00 914	+	+	+	—	—
	16 400	36.00 914	+	36.00 914	+	+	+	—	—
	18 450	36.00 914	+	36.00 914	+	+	+	—	—
	20 500	36.00 914	1280.0 580.6	36.00 914	+	+	+	49.00 1245	+
	24 600	36.00 914	1370.0 621.4	36.00 914	+	+	+	49.00 1245	+
	30 750	36.00 914	1450.0 657.7	36.00 914	+	+	+	49.00 1245	+

+ Contact Victaulic for details.

IMPORTANT NOTE:

For 30"/750 mm sizes and larger contact Victaulic for details.

VICTAULIC IS A REGISTERED TRADEMARK OF VICTAULIC COMPANY. © 2007 VICTAULIC COMPANY. ALL RIGHTS RESERVED. PRINTED IN THE USA.

Ductile Iron AWWA (Cast) Fittings

Base Fittings

NO. 10-CB Base Elbow
NO. 20-CB Base Tee
NO. 25-CB Reducing Base Tee
NO. 100-CB Long Radius Base Elbow

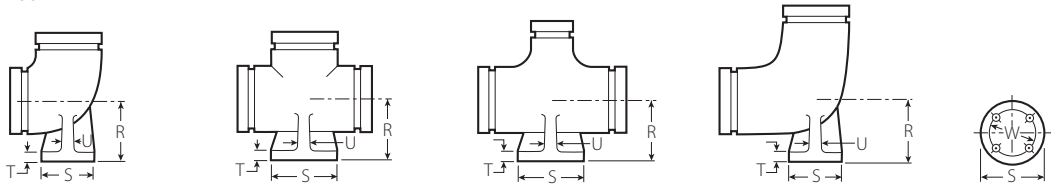

NO. 10-CB NO. 20-CB NO. 25-CB NO. 100-CB ROUND BASE

Size		Dimensions – Inches/mm					Approx. Weight Each			
Nominal Size Inches/ mm	Actual Outside Dia. Inches mm	R	U	T	S	W	No. 10-CB Base Elbow Lbs. kg	No. 20-CB Base Tee Lbs. kg	No. 100-CB LR Base Elbow Lbs. kg	No. 25-CB Red. Base Tee Lbs. kg
3 80	3.960 100.6	4.88 124	0.50 13	0.56 14	5.00 127	3.88 99	19.0 8.6	19.0 8.6	—	+
4 100	4.800 121.9	5.50 140	0.50 13	0.62 16	6.00 152	4.75 121	23.6 10.7	26.0 11.8	—	+
6 150	6.900 175.3	7.00 178	0.62 16	0.69 18	7.00 178	5.50 140	42.0 19.1	50.0 22.7	—	+
8 200	9.050 229.9	8.38 213	0.88 22	0.94 24	9.00 229	7.50 191	75.0 34.0	92.0 41.7	—	+
10 250	11.100 281.9	9.75 248	0.88 22	0.94 24	9.00 229	7.50 191	114.0 51.7	125.0 56.7	—	+
12 300	13.200 335.3	11.25 286	1.00 25	1.00 25	11.00 279	9.50 241	152.0 69.0	183.0 83.0	—	+
14 350	15.300 388.6	12.50 318	1.00 25	1.00 25	11.00 279	9.50 241	—	—	340.0 154.2	+
16 400	17.400 442.0	13.75 349	1.00 25	1.00 25	11.00 279	9.50 241	—	—	425.0 192.8	+
18 450	19.500 495.3	15.00 381	1.12 29	1.12 29	13.50 343	11.75 299	—	—	591.0 268.1	+
20 500	21.600 548.6	16.00 406	1.12 29	1.12 29	13.50 343	11.75 299	—	—	717.0 325.2	+
24 600	25.800 655.3	18.50 470	1.12 29	1.12 29	13.50 343	11.75 299	—	—	1056.0 479.0	+

+ 90° reducing elbows are available with a base. Contact Victaulic for details.

IMPORTANT NOTES:

Bolt hole template shown for round base is the same as for the flange of the supporting pipe size, except using only four holes in all cases so placed as to straddle center lines.

The bases of these fittings are intended for support in compression and are not to be used for anchors or supports in tension or sheer.

Grooved end base 90° elbows (#X-90 CDI) and base tees (#X-CDI) are available with dimensions to ANSI B16.1.

Side base fittings are available. Contact Victaulic for details.

For Center to End dimensions, refer to corresponding fitting without the base.

VICTAULIC IS A REGISTERED TRADEMARK OF VICTAULIC COMPANY. © 2007 VICTAULIC COMPANY. ALL RIGHTS RESERVED. PRINTED IN THE USA.

Ductile Iron AWWA (Cast) Fittings

Flared and Outlet Fittings

NO. 10-CF 90º Flare
NO. 100-CF 90º Long Radius Flare
NO. 43-CF Straight Flare
NO. 10-CS 90º Side Outlet
NO. 20-CS Tee Side Outlet

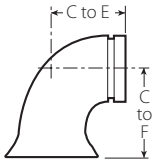

NO. 10-CF

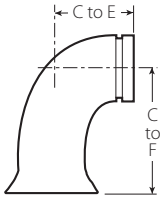

NO. 100-CF

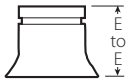

NO. 43-CF

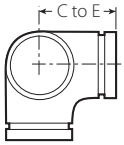

NO. 10-CS

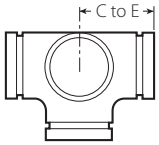

NO. 20-CS

Size		No. 10-CF 90° Flare			No. 100-CF 90° Long Radius Flare			No. 43-CF Straight Flare		No. 10-CS* 90° Side Outlet		No. 20-CS* Tee Side Outlet	
Nominal Size Inches/ mm	Actual Outside Dia. Inches mm	C to E Inches mm	C to F Inches mm	Approx. Wgt. Each Lbs. kg	C to E Inches mm	C to F Inches mm	Approx. Wgt. Each Lbs. kg	E to E Inches mm	Approx. Wgt. Each Lbs. kg	C to E Inches mm	Approx. Wgt. Each Lbs. kg	C to E Inches mm	Approx. Wgt. Each Lbs. kg
3 80	3.960 100.6	5.50 140	9.00 229	18.0 8.2	7.75 197	11.25 286	23.0 10.4	8.00 203	13.0 5.9	5.50 140	13.0 5.9	5.50 140	28.0 12.7
4 100	4.800 121.9	6.50 165	9.50 241	35.0 15.9	9.00 229	12.50 318	42.0 19.1	8.00 203	17.0 7.7	6.50 165	30.0 13.6	6.50 165	42.0 19.1
6 150	6.900 175.3	8.00 203	11.50 292	70.0 31.8	11.50 292	15.00 381	68.0 30.9	8.00 203	23.0 10.4	8.00 203	58.0 26.3	8.00 203	85.0 38.6
8 200	9.050 229.9	9.00 229	13.50 343	120.0 54.4	14.00 356	18.50 470	118.0 53.5	10.00 254	43.0 19.5	9.00 229	90.0 40.8	9.00 229	114.0 51.7
10 250	11.100 281.9	11.00 279	16.50 419	157.0 71.2	16.50 419	22.50 572	188.0 85.3	10.00 254	58.0 26.3	11.00 279	124.0 56.3	11.00 279	219.0 99.3
12 300	13.200 335.3	12.00 305	18.50 470	190.0 86.2	19.00 483	25.50 648	275.0 124.7	12.00 305	100.0 45.4	12.00 305	170.0 77.1	12.00 305	295.0 133.8
14 350	15.300 388.6	14.00 356	21.50 546	235.0 106.6	21.50 546	29.00 737	325.0 147.4	12.00 305	90.0 40.8	14.00 356	+	+	+
16 400	17.400 442.0	15.00 381	23.00 584	300.0 136.1	24.00 610	32.00 813	435.0 197.3	16.00 406	145.0 65.8	15.00 381	+	+	+
18 450	19.500 495.3	16.50 419	25.00 635	391.0 177.4	26.50 673	35.00 889	571.0 259.0	16.00 406	205.0 93.0	16.50 419	+	+	+
20 500	21.600 548.6	18.00 457	27.00 686	496.0 255.0	29.00 737	38.00 965	731.0 331.6	18.00 457	221.0 100.3	18.00 457	+	+	+
24 600	25.800 655.3	22.00 559	32.50 826	808.0 366.5	34.00 864	44.50 1130	1642.0 744.8	18.00 457	293.0 132.9	22.00 559	+	+	+
30 750	32.000 762.0	+	+	+	+	+	+	24.00 610	567.0 257.2	+	+	+	+
36 900	38.300 914.4	+	+	+	+	+	+	24.00 610	736.0 333.9	+	+	+	+

\+ Contact Victaulic for details.

* Reducing side outlet 90° Elbows, Tees, and Crosses are available. Contact Victaulic for details.

VICTAULIC IS A REGISTERED TRADEMARK OF VICTAULIC COMPANY. © 2007 VICTAULIC COMPANY. ALL RIGHTS RESERVED. PRINTED IN THE USA.

Ductile Iron AWWA (Cast) Fittings

Tapped Fittings

Victaulic can supply tapped fittings on order to ANSI B16.1 dimension locations. Specify fittings size, tap location by letter (as shown below) and tap size (NPT dimensions) on order.

Elbows

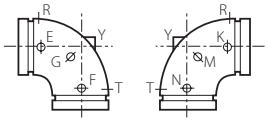

90° ELBOW – STRAIGHT SIZE

90° ELBOW

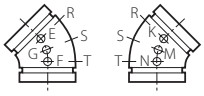

45° ELBOW BASE FITTINGS

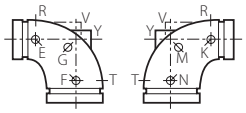

90° ELBOW REDUCING SIZES

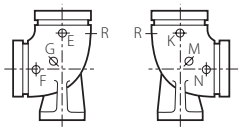

90° BASE ELBOW – STRAIGHT & REDUCING

Tees, Crosses, Wyes, and Laterals

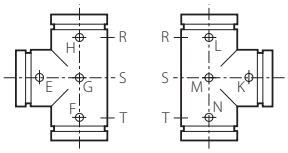

TEE – STRAIGHT SIZES

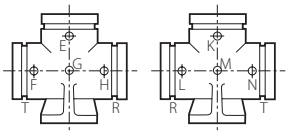

BASE TEE

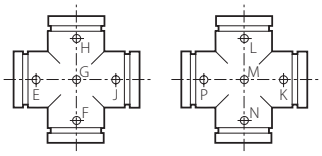

CROSS – STRAIGHT SIZE

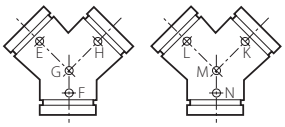

TRUE WYE

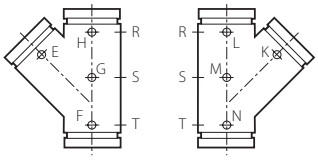

45° LATERAL – STRAIGHT & REDUCING

Reducers

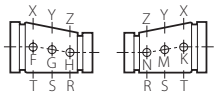

ECCENTRIC REDUCER

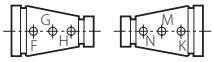

CONCENTRIC REDUCER

WARRANTY

Refer to the Warranty section of the current Price List or contact Victaulic for details.

NOTE

This product shall be manufactured by Victaulic or to Victaulic specifications. All products to be installed in accordance with current Victaulic installation/assembly instructions. Victaulic reserves the right to change product specifications, designs and standard equipment without notice and without incurring obligations.

WCAS-6UBJ4K

For complete contact information, visit www.victaulic.com

23.05 1680 REV I UPDATED 5/2007

VICTAULIC IS A REGISTERED TRADEMARK OF VICTAULIC COMPANY. © 2007 VICTAULIC COMPANY. ALL RIGHTS RESERVED. PRINTED IN THE USA.

ANSI/AWWA **C104/A21.4-22**

(Revision of ANSI/AWWA C104/A21.4-16)

AWWA Standard

Cement–Mortar Lining for Ductile-Iron Pipe and Fittings

Effective date: Feb. 1, 2023.

First edition approved by Board of Directors Jan. 28, 1980.
This edition approved Oct. 24, 2022.
Approved by American National Standards Institute Oct. 4, 2022.

American Water Works Association

Approved American National Standard ANSI

STANDARD Since 1881

AWWA Standard

This document is an American Water Works Association (AWWA) standard. It is not a specification. AWWA standards describe minimum requirements and do not contain all of the engineering and administrative information normally contained in specifications. The AWWA standards usually contain options that must be evaluated by the user of the standard. Until each optional feature is specified by the user, the product or service is not fully defined. AWWA publication of a standard does not constitute endorsement of any product or product type, nor does AWWA test, certify, or approve any product. The use of AWWA standards is entirely voluntary. This standard does not supersede or take precedence over or displace any applicable law, regulation, or code of any governmental authority. AWWA standards are intended to represent a consensus of the water industry that the product described will provide satisfactory service. When AWWA revises or withdraws this standard, an official notice of action will be placed in the Official Notice section of *Journal AWWA.* The action becomes effective on the first day of the month following the month of *Journal AWWA* publication of the official notice.

American National Standard

An American National Standard implies a consensus of those substantially concerned with its scope and provisions. An American National Standard is intended as a guide to aid the manufacturer, the consumer, and the general public. The existence of an American National Standard does not in any respect preclude anyone, whether that person has approved the standard or not, from manufacturing, marketing, purchasing, or using products, processes, or procedures not conforming to the standard. American National Standards are subject to periodic review, and users are cautioned to obtain the latest editions. Producers of goods made in conformity with an American National Standard are encouraged to state on their own responsibility in advertising and promotional materials or on tags or labels that the goods are produced in conformity with particular American National Standards.

Caution Notice: The American National Standards Institute (ANSI) approval date on the front cover of this standard indicates completion of the ANSI approval process. This American National Standard may be revised or withdrawn at any time. ANSI procedures require that action be taken to reaffirm, revise, or withdraw this standard no later than five years from the date of ANSI approval. Purchasers of American National Standards may receive current information on all standards by calling or writing the American National Standards Institute, 25 West 43rd Street, Fourth Floor, New York, NY 10036; 212.642.4900, or emailing info@ansi.org.

All rights reserved. No part of this publication may be reproduced or transmitted in any form or by any means, electronic or mechanical, including scanning, recording, or any information or retrieval system. Reproduction and commercial use of this material is prohibited, except with written permission from the publisher. Please send any requests or questions to permissions@awwa.org.

ISBN-13, print: 978-1-64717-117-9

eISBN-13, electronic: 978-1-61300-648-1

DOI: http://dx.doi.org/10.12999/AWWA.C104.22

All rights reserved. No part of this publication may be reproduced or transmitted in any form or by any means, electronic or mechanical, including scanning, recording, or any information or retrieval system. Reproduction and commercial use of this material is prohibited, except with written permission from the publisher.

Copyright © 2022 by American Water Works Association
Printed in USA

Copyright © 2022 by American Water Works Association. All Rights Reserved

Committee Personnel

The AWWA A21 Standards Subcommittee 4, Coatings and Linings, which reviewed and approved this standard, had the following personnel at the time of approval:

Gregg Horn, *Chair*

General Interest Members

J.A. Hrdlicka (*liaison, nonvoting*), Standards Engineer Liaison, AWWA, Denver, Colo.
D.H. Kroon, Aegion, Houston, Tex.
J.R. Plattsmier, Consultant, New Port Richey, Fla.
P.A. Selig, Consultant, Birmingham, Ala.

Producer Members

J.H. Eddings, McWane Inc., Phillipsburg, N.J.
J.A. Fancher (*alternate*), American Cast Iron Pipe Company, Birmingham, Ala.
M.D. Gaston, American Cast Iron Pipe Company, Birmingham, Ala.
L.G. Horn, Ductile Iron Pipe Research Association, Birmingham, Ala.
A.M. Horton, US Pipe & Foundry Company, Birmingham, Ala.
K.J. Kempf, Kempf Holdings, LLC, Foundry Services Co., Omaha, Neb.
H. Kennedy, Jr., Harold Kennedy & Associates, Fuquay-Varina, N.C.
V. O'Dea, Tnemec Company, Kansas City, Mo.
D. Swalley, Electrosteel USA, Birmingham, Ala.

User Members

M.J. Britch, Tualatin Valley Water District, Beaverton, Ore.
B. Matejcek, Orange County Utilities, Orlando, Fla.
J.R. Waugh, Bureau of Reclamation, Denver, Colo.
R.L. Worden, COMCD, Norman, Okla.

Copyright © 2022 by American Water Works Association. All Rights Reserved

AWWA Standards Committee A21, Ductile Iron Pipe and Fittings, which reviewed and approved this standard, had the following personnel at the time of approval:

John R. Plattsmier, *Chair*
Maury D. Gaston, *Vice-Chair*

General Interest Members

M. Dunn, Crist Engineers, Inc., Little Rock, Ark.
J. Hebenstreit, Underwriters Laboratories Inc., Northbrook, Ill.
M.B. Horsley, Horsley Engineering LLC, Overland Park, Kans.
J.A. Hrdlicka (*liaison, nonvoting*), Standards Engineer Liaison, AWWA, Denver, Colo.
D.H. Kroon, Aegion, Houston, Tex.
D.D. Lary (*alternate*), Wright-Pierce, Topsham, Maine
C.R. Laucamp, AECOM, Chicago, Ill.
P.J. Mourt, Mott MacDonald, Philadelphia, Pa.
J.R. Plattsmier, Consultant, New Port Richey, Fla.
S. Pool (*alternate*), HDR Engineering, Denver, Colo.
T.M. Stinson, Kleinfelder SEA Company, Holbrook, Mass.

Producer Members

L.R. Dunn (*alternate*), US Pipe & Foundry Company, Birmingham, Ala.
J.H. Eddings, McWane Inc., Phillipsburg, N.J.
J.A. Fancher (*alternate*), American Cast Iron Pipe Company, Birmingham, Ala.
M.D. Gaston, American Cast Iron Pipe Company, Birmingham, Ala.
L.G. Horn, Ductile Iron Pipe Research Association, Birmingham, Ala.
D. Hughes, US Pipe & Foundry Company, Birmingham, Ala.
J.C. Jones, Georg Fischer, Dallas, Tex.
H. Kennedy, Jr., Harold Kennedy & Associates, Fuquay-Varina, N.C.
J.S. Palombo, Everett J. Prescott, Inc., Gardiner, Maine
A. Rich (*alternate*), G.A. Rich and Sons, Deer Creek, Ill.
D. Swalley, Electrosteel, Birmingham, Ala.

Copyright © 2022 by American Water Works Association. All Rights Reserved

User Members

M.J. Britch, Tualatin Valley Water District, Beaverton, Ore.

J. Fox, Tampa Bay Water, Clearwater, Fla.

D.D. Montgomery, Independence Water Department, Independence, Mo.

C.J. Patla, Connecticut Water Service Inc., Clinton, Conn.

G. Ramon (*liaison, nonvoting*), Standards Council Liaison, Little Rock Water Reclamation Authority, Little Rock, Ark.

J.M. Ross, Denver Water, Denver, Colo.

P.A. Shively, City of Kansas City, Kansas City, Mo.

J.R. Waugh, Bureau of Reclamation, Denver, Colo.

J.T. Wilson, Cobb County-Marietta Water Authority, Marietta, Ga.

R.L. Worden, COMCD, Norman, Okla.

Copyright © 2022 by American Water Works Association. All Rights Reserved

This page intentionally blank.

Copyright © 2022 by American Water Works Association. All Rights Reserved

Contents

All AWWA standards follow the general format indicated subsequently. Some variations from this format may be found in a particular standard.

SEC. PAGE

Foreword

I Introduction ix
I.A Background ix
I.B History ix
I.C Acceptance xi
II Special Issues xii
II.A Use of Seal Coat xii
II.B Lining of Pipelines in Place xii
III Use of This Standard xiii
III.A Purchaser Options and Alternatives xiii
III.B Modification to Standard xiii
IV Major Revisions xiii
V Comments xiii

Standard

1 General
1.1 Scope 1
1.2 Purpose 1
1.3 Application 1

2 References 2

3 Definitions 3

SEC. PAGE

4 Requirement
4.1 Materials 3
4.2 Cement 4
4.3 Sand 4
4.4 Water 4
4.5 Mortar 4
4.6 Surface of Pipe and Fittings for Lining 4
4.7 Method of Lining 5
4.8 Thickness of Lining 5
4.9 Determination of Thickness 5
4.10 Curing 6
4.11 Lining Quality 6
4.12 Seal Coat 6

5 Verification
5.1 Testing of Sand 7
5.2 Testing of Seal Coat 8

6 Delivery
6.1 Notice of Nonconformance 9
6.2 Affidavit of Compliance 9

Tables

1 Minimum Thickness of Linings for Pipe and Fittings 5
2 Requirements for Sand Tested with Standard Sieves 7

Copyright © 2022 by American Water Works Association. All Rights Reserved

This page intentionally blank.

Copyright © 2022 by American Water Works Association. All Rights Reserved

Foreword

This foreword is for information only and is not a part of ANSI/AWWA C104/A21.4.*

I. Introduction.

I.A. *Background.* The first cast-iron water mains were not lined but were installed in the same condition in which they came from the molds following cleaning. After many years, it became evident that the interior of the pipe could be affected by certain types of water. The first lining used to combat aggressive waters was a hot-dip bituminous lining that protected the pipe satisfactorily, except in areas where water penetrated the pinholes in the bituminous lining, wherein tuberculation ensued. The need for a better lining to combat tuberculation led to experiments with cement mortar as a lining material.

Cement–mortar linings prevent tuberculation by creating a high pH at the pipe wall and ultimately by providing a physical barrier to the water. Cement–mortar linings are also smooth, which results in high flow coefficients.

In 1922, the first cement–mortar-lined cast-iron pipe was installed in the water distribution system of Charleston, S.C. The pipe was lined in the field using a projectile drawn through the pipe. Since this initial installation, many improvements have been made in the production of cement–mortar-lined pipe. Cement–mortar-lined pipes are now centrifugally lined at the foundry to ensure that quality control is maintained and that a uniform thickness of mortar is distributed throughout the length of the pipe.

I.B. *History.* From 1922 to 1929, many installations of cement–mortar-lined cast-iron pipe were made under various manufacturers' specifications. In 1929, the American Standards Association (ASA) [now the American National Standards Institute (ANSI)] Committee A21 on Cast-Iron Pipe and Fittings issued a tentative standard for cement–mortar linings, which was published by AWWA as a tentative standard in 1932. After many revisions and refinements, the standard was officially adopted by ASA in 1939 under the designation A21.4, American Standard Specifications for Cement–Mortar Lining for Cast-Iron Pipe and Fittings.

From 1940 to 1952, considerable research was done to improve the quality of the cement–mortar lining. The centrifugal process of lining was improved to provide the controls and techniques necessary to ensure uniformity of lining thickness throughout the length of the pipe. Methods of curing cement mortar were investigated, resulting

* American National Standards Institute, 25 West 43rd Street, Fourth Floor, New York, NY 10036.

Copyright © 2022 by American Water Works Association. All Rights Reserved

in the recognition that seal-coat materials could be used as a substitute for the moist-curing process. As a result of this research, a revised edition of the 1939 standard was approved and issued in 1953.

In 1958, Committee A21 was reorganized, and subcommittees were established to study each group of standards in accordance with ASA's review and revision policy. Subcommittee 4, Coatings and Linings for Cast-Iron Pipe, was organized to examine the existing ASA A21.4-53, American National Standard Specifications for Cement–Mortar Lining for Cast-Iron Pipe and Fittings. The subcommittee completed its study of A21.4-53 and submitted a proposed revision to Committee A21 in 1963. The revised third edition was approved and issued in 1964 and included a reduction in the minimum permissible thickness of lining. This reduction was based on more than 20 years of research by the Cast Iron Pipe Research Association (CIPRA) [now the Ductile Iron Pipe Research Association (DIPRA)] on experimental test lines having cement–mortar linings ranging from 1⁄32 to 1⁄4 in. (0.79 to 6.35 mm) in thickness and the assurance of uniformity of lining thickness using the centrifugal lining process. The 1964 revision also required the cement to meet the requirements of ASTM[†] C150, Specification for Portland Cement.

The next revision was issued in 1971. This revision incorporated a standard test for toxicity of the seal-coat material. The standard was again revised in 1974, and major changes to the section on lining quality were incorporated into that revision.

The 1980 revision to the standard included further changes to the section on lining quality, clarifying problems with some literal interpretations. Metric conversions of all dimensions and physical requirements were also included, and the projection method was added as an allowable means of lining pipe and fittings.

In the 1985 edition of the standard, all references to gray cast-iron pipe were deleted because gray cast-iron pipe was no longer being produced in the United States.

The 1990 revision of the standard included no major changes.

In 1995, the section on cement was expanded to include types of cement other than Portland, and the size range covered by the standard was expanded to include 3-in. through 64-in. (76-mm through 1,600-mm) sizes. Additionally, the section on seal coat was revised to allow the manufacturer the option of providing the cement–mortar lining with or without a seal coat unless otherwise specified; the option of using seal-coat materials other than asphaltic was deleted.

[†] ASTM International, 100 Barr Harbor Drive, P.O. Box C700, West Conshohocken, PA 19428.

Copyright © 2022 by American Water Works Association. All Rights Reserved

In 2003, the format was changed to the current AWWA standard style. Sec. 4.7 on the thickness of lining and Sec. 4.8 on determination of thickness were revised to delete the requirement that the thickness shall be determined while the mortar is wet.

The next edition of ANSI/AWWA C104 was approved by the AWWA Board of Directors on June 8, 2008. In 2008, wastewater and reclaimed water applications were added; water contact surfaces were allowed to be qualified for the limit of toxic substances in accordance with NSF/ANSI 61; and delivery requirements were added for Notice of Nonconformance and Affidavit of Compliance.

In 2013, raw water applications were added; testing to NSF/ANSI 61 or Food and Drug Administration (FDA) Section 175.300 of Title 21 *Code of Federal Regulations* (CFR) Resinous and Polymeric Coatings for products in contact with potable water was added; and a provision for blending other cements with ASTM C150 cement was added.

The last edition was approved on Jan. 16, 2016, and this edition was approved on Oct. 24, 2022.

I.C. *Acceptance.* In May 1985, the US Environmental Protection Agency (USEPA) entered into a cooperative agreement with a consortium led by NSF International (NSF) to develop voluntary third-party consensus standards and a certification program for direct and indirect drinking water additives. Other members of the original consortium included the Water Research Foundation (formerly AwwaRF) and the Conference of State Health and Environmental Managers (COSHEM). AWWA and the Association of State Drinking Water Administrators (ASDWA) joined later.

In the United States, authority to regulate products for use in, or in contact with, drinking water rests with individual states.[‡] Local agencies may choose to impose requirements more stringent than those required by the state. To evaluate the health effects of products and drinking water additives from such products, state and local agencies may use various references, including

1. Specific policies of the state or local agency.

2. Two standards developed under the direction of NSF[§]: NSF/ANSI/CAN[¶] 60, Drinking Water Treatment Chemicals—Health Effects, and NSF/ANSI/CAN 61, Drinking Water System Components—Health Effects.

[‡] Persons outside the United States should contact the appropriate authority having jurisdiction.

[§] NSF International, 789 North Dixboro Road, Ann Arbor, MI 48106.

[¶] Standards Council of Canada, 55 Metcalfe Street, Suite 600, Ottawa, ON K1P 6L5 Canada.

Copyright © 2022 by American Water Works Association. All Rights Reserved

3. Other references, including AWWA standards, *Food Chemicals Codex, Water Chemicals Codex*,** and other standards considered appropriate by the state or local agency.

Various certification organizations may be involved in certifying products in accordance with NSF/ANSI/CAN 61. Individual states or local agencies have authority to accept or accredit certification organizations within their jurisdictions. Accreditation of certification organizations may vary from jurisdiction to jurisdiction.

Annex A, "Toxicology Review and Evaluation Procedures," to NSF/ANSI/CAN 61 does not stipulate a maximum allowable level (MAL) of a contaminant for substances not regulated by a USEPA final Maximum Contaminant Level (MCL). The MALs of an unspecified list of "unregulated contaminants" are based on toxicity testing guidelines (noncarcinogens) and risk characterization methodology (carcinogens). Use of Annex A procedures may not always be identical, depending on the certifier.

ANSI/AWWA C104 does not address additives requirements. Thus, users of this standard should consult the appropriate state or local agency having jurisdiction in order to

1. Determine additives requirements, including applicable standards.
2. Determine the status of certifications by parties offering to certify products for contact with, or treatment of, drinking water.
3. Determine current information on product certification.

II. Special Issues.

II.A. *Use of Seal Coat.* Cement–mortar linings may be provided with or without a seal coat (Sec. 4.12.1). The purchaser of cement–mortar-lined pipe or fittings for use with water that is corrosive to cement, such as very soft water, should determine, by using the appropriate test, that a lining without a seal coat will not impart objectionable hardness or alkalinity to the water. The procedure outlined in Sec. 5.2.2.2, modified by the substitution of the water with which the pipe is to be used, is recommended. The concentration of leachates increases with the aggressiveness of the water and its residual time in the pipe and is indirectly proportional to the diameter of the pipe.

II.B. *Lining of Pipelines in Place.* This standard does not include provisions for cement–mortar lining of pipelines in place. Field lining of pipes is addressed in ANSI/AWWA C602.

** Both publications available from National Academies Press, 500 Fifth Street, NW, Washington, DC 20001.

Copyright © 2022 by American Water Works Association. All Rights Reserved

III. Use of This Standard. It is the responsibility of the user of an AWWA standard to determine that the products described in that standard are suitable for use in the particular application being considered.

III.A. *Purchaser Options and Alternatives.* The following items should be provided by the purchaser:

1. Standard used—that is, ANSI/AWWA C104, Standard for Cement–Mortar Lining for Ductile-Iron Pipe and Fittings, of latest revision.
2. Details of federal, state, provincial, and local requirements (Sec. 4.1).
3. For applications other than potable water, whether compliance with NSF/ANSI/CAN 61, Drinking Water System Components—Health Effects, or alternatively FDA Section 175.300 of Title 21 CFR, is required (Sec. 4.1.2).
4. Type of cement (Sec. 4.2).
5. Thickness of lining (Sec. 4.8). Two thicknesses of lining are available, and purchasers who require a lining thickness twice the standard thickness have the option of so specifying.
6. Seal-coat requirements (Sec. 4.12). The purchaser has the option of specifying if the cement–mortar lining is to be provided with or without a seal coat.
7. Notice of nonconformance (Sec. 6.1).
8. Request for an affidavit of compliance (Sec. 6.2).

III.B. *Modification to Standard.* Any modifications to the provisions, definitions, or terminology in this standard must be provided by the purchaser.

IV. Major Revisions. Major revisions made to the standard in this edition include the following:

1. Clarification to acceptable water use in Sec. 4.4.
2. Clarification to test record requirements in Sec. 5.1.5.
3. Clarification to notice of nonconformance in Sec. 6.1.

V. Comments. If you have any comments or questions about this standard, please call AWWA Engineering and Technical Services at 303.794.7711; FAX at 303.795.7603; write to the department at 6666 West Quincy Avenue, Denver, CO 80235-3098; or email at standards@awwa.org.

Copyright © 2022 by American Water Works Association. All Rights Reserved

CBGL911 GLASS LINING

REV 2022

APPLICATION

Glass lining inside of ductile iron pipe has been used successfully for over 40 years. Most commonly used for it's "non stick" characteristics to convey fluids containing higher solids concentration such as sludge, scum, and grease in sewage service and wastewater treatment plant applications.

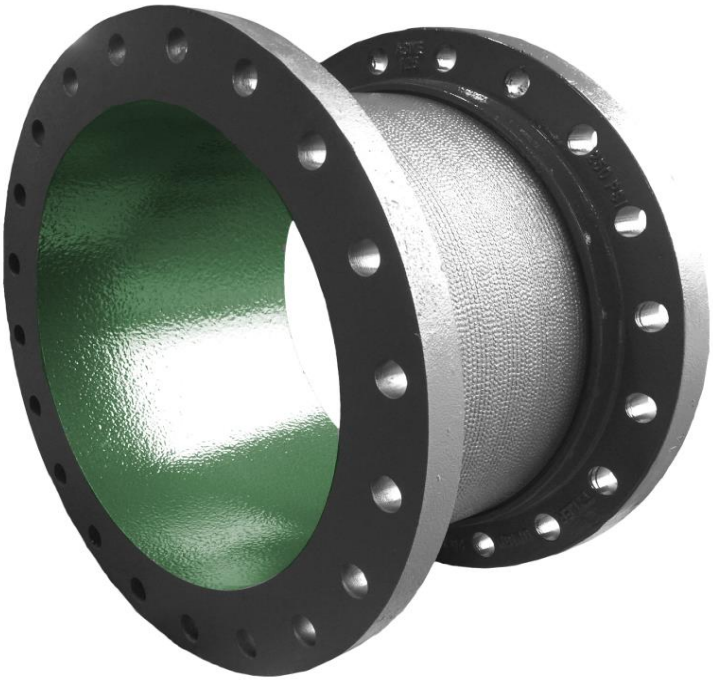

CBGL911 LINING MATERIAL

Glass lined pipe shall conform to ASTM B1000-21. The standard of quality shall be CBGL911. The glass powder shall be specifically formulated and shall be vitreous and inorganic. The lining must be proven to be successful in conveying sludge, scum, and grease in sewage service and wastewater treatment plant applications.

- The lining Applicator must have a minimum of 5 years proven experience in production of glass lined ductile iron piping conforming to ASTM B1000.
- Any request for substitution of material must be accompanied by a successful history of lining ductile iron pipe and fittings which are used in these applications.
- The lining Applicator must be an ISO 9001:2000 certified company.
- The manufacturer must be able to provide independent third party engineer sealed test reports verifying the following results.

These physical and chemical tests must have been performed on coupons from the applicators regular production lined ductile iron pipe and/or fittings.

1. ASTM D5965 test (per ASTM B1000) for density in the range of 2.5 to 3.0 g/cm^3
2. Immersion testing in a solution of 8% sulfuric acid at a temperature of 148 °F. (65 °C) for a period of 10 minutes minimum. The glass shall have a negligible visible loss of surface gloss.
3. Glass shall be capable of withstanding an instantaneous thermal shock of 350 °F (177 °C) without cracking, crazing, blistering or spalling.
4. Glass lining have a minimum hardness of 5 on the MOHS scale.
5. Glass shall have maximum weight loss of 3 mg/in^2 when exposed to an HCl solution with pH of 3 at 125 °F for 30 minutes.
6. Glass shall have maximum weight loss of 3 mg/in^2 when exposed to an NaOH solution with pH of 10 at 125 °F for 30 minutes.
7. Glass shall have maximum weight loss of 3 mg/in^2 when exposed to a boiling citric acid solution per ASTM C283 for 10 minutes.
8. The finished lining shall be able to withstand a strain of 0.001 in/in of the base metal without visible damage to the glass

WHY USE GLASS LINING?

Glass Lined ductile iron pipe assists in keeping your systems clean and free from clogging. Glass lining also helps protect the pipe from abrasion present in grit removal and other sewer process systems.

Glass lining is a porcelain material and common sewer materials resist sticking to it like they do with epoxy lining materials.

CBGL911 glass lining is also excellent for high temperature requirements where other protective linings cannot remain in service.

Did you know that you can get process valves with CBGL911 glass lining? Many valve manufacturers currently supply CBGL911 glass lined valves

Struvite buildup in sludge piping system

CBGL911 GLASS LINING

CBGL911 LINING APPLICATION

A. Surface Preparation

The entire surface area to receive the glass compound shall be inspected for the presence of oil, grease, or any other soluble substances. Any areas found with contamination shall be solvent cleaned to completely remove these substances. After cleaning, all surface areas shall be mechanically ground so as to remove any casting imperfections leaving only a smooth surface with no raised projections. Finally, the entire surface area to be lined shall be struck with a blast media so that all remaining impurities from the cleaning operations are removed. Only tightly adhering cast-in oxides may be left on the surface.

Surface grinding prep for a ductile iron casting

B. Lining

After surface preparation, the interior of the pipe or fitting shall receive an application of base glass compound which has been suspended in a water carrier. After the water has evaporated, the pipe or fitting shall be oven-fired at a temperature of 1375 degrees F. (746 degrees C) in order to fuse the glass to the metal surface. The subsequent finish coats are similarly processed with a resultant lining thickness of 10 mils (.25mm) minimum.

INSPECTION

CBGL911 Glass Lined Valve Components

1. All ductile iron pipe and fittings shall be checked for thickness using a magnetic film thickness gage by the method outlined in SSPC-PA2 Film Thickness Rating.

2. The lining shall be in accordance with the Applicator's industry standard tolerance for coverage and continuity. All pipe and fittings shall be visually inspected after lining at the Applicator's facility. Each and every pipe or fitting shall be tested with a 67.5 volt Tinker Rasor electronic device with a wetted sponge to determine the presence of pinholes or voids. Excessive pinholes shall be cause for rejection at the Applicator's facility.

3. Each and every pipe or fitting shall be marked on the interior glass surface using a permanent marker; the date of application and tests, the facility location and the number of acceptable pinholes detected. Quality Assurance reports will be maintained at the Applicator's facility evidencing all work performed and data recorded.

4. The Owner/or his Representative may witness at the Applicator's facility; the glass application process, review the Quality Assurance Reports and witness the actual tests conducted upon his product, all prior to the product leaving the facility. This may be done by written Specification or by sufficient notice to the Applicator to allow coordination of the visit.

CERTIFICATION

The Applicator must be able to supply a notarized Certificate of Compliance attesting to the fact that the glass lining has met all of the requirements of this specification and that the material lined has met the applicable standards of AWWA and ANSI where noted.

CBGL911 GLASS LINING

HANDLING

Glass lined pipe and fittings must be handled only from the exterior surfaces; no forks, straps, hooks, etc; shall come into contact with the interior surface of glass. Pipe and fittings that have been altered after it left the Applicator's facility, such as field cuts or further fabrication, may not exhibit the same tested results as was documented at the Applicator's facility.

FIELD REPAIR

CBGL911 Glass repair Epoxy shall be used for touch-up or repair in accordance with the Manufacturer's recommendation below.

1. Remove burrs caused by field cutting of ends or handling damage and smooth out the edge of the lining if rough.

2. Remove all traces of oil, grease, asphalt, dust,dirt, etc.

3. Remove any damaged lining caused by field cutting operations' or handling and clean any exposed metal by sanding or scraping. Sandblasting or power tool cleaning roughening is also acceptable. It is recommended that any loose lining be removed by chiseling, cutting, or scraping into well-adhered lined area before patching. Be sure to overlap at least 1" of lining in the area to be repaired.

4. With the area to be sealed or repaired absolutely clean and suitably roughened, apply a coat of CBGL Glass Repair Epoxy using the following procedure:

a. Mixing procedure - The Repair Kit for CBGL 911 Glass Lining contains two small cans of CBGL 911 Glass Repair Epoxy. CBGL 911 Glass Repair Epoxy is a two-component epoxy and the contents of the small container shall be mixed with the contents of the large container. if less than the full contents of each can is to be mixed, the material may be mixed using the mixing ratio printed on the labels. Add Q4-5311 Part B to A4-5311 Part A. Mix thoroughly with enclosed paddle. All activated material must be used within one hour of mixing.

b. Application of Material- After the material has been thoroughly mixed, it can be applied to the properly prepared surface by brush. Brushing is usually best due to the fact that the areas to be repaired are usually small.

5. It is important to coat the entire freshly cut exposed metal surface of the cut pipe end. To ensure proper sealing, overlap at least one inch of the lining with this repair material.

TECHNICAL DATA CBGL 911 GLASS REPAIR EPOXY

- DESCRIPTION: A brushable polyamidoamine epoxy designed for sealing cut ends and repairs when pipes are lined with CBGL 911 Glass Lining.
- LIMITATIONS: CBGL911 Glass Repair Epoxy should be used over glass or bare metal for repairing cut ends of pipe or damaged areas in CBGL Glass Lining. The Glass Repair Epoxy must be used over properly prepared ductile iron surfaces or roughened glass lining.
- SURFACE PREPARATION: The surface preparation shall be equal to the specifications for the project or as outlined in the touch-up procedure. Do not apply glass repair epoxy over wet or frozen surfaces,or over glass surfaces that have not been roughened.
- DRY FILM: THICKNESS: As outlined in specifications, usually 3.0 to 5.0 mils per coat in two coats for 6.0 to 10.0 mils dry film thickness.
- APPLICATION: Brush
- THINNING: Thin or cleanup with Methyl Ethyl Ketone.
- PHYSICAL DATA: VOLATILE ORGANIC CONTENTS: 2.90 lbs. per gallon
- SAFETY DATA: See individual product label for safety and health data information. Individual Material Safety Data Sheets are available upon request.

□llstates □oat□n□s □o□

□□□N□L□□ □r□□□ ● □□d□□ □□□r□T□ □□□□□
□□□□□□□□□□□□□ ● □ □ □ □□□□□□□□□□□□□□□□□□□□□□□□□□□□□

PRODUCT INFORMATION

ALT-220 Acrysphalt™

ALT-220 Acrysphalt™

USER friendly, complies with all V.O.C. emissions and E.P.A. standards.

Certified to NSF/ANSI 61

GENERAL: A non-flammable asphalt emulsion blended with an extremely high concentration of unique polymer and plasticizers to achieve extreme adherence to the substrate, durability and flexibility. Acrysphalt™ is a black one component, sprayable or dipped coating specially designed to protect from corrosion, water and environmental elements for prime or top coat on any zinc, surface-metal, concrete, wood or brick.

SURFACE PREPARATION: Surface must be dry, free from dirt, dust and oil. If necessary, dirt, loose pieces of coatings or chemical residue should be removed. For best results, DO NOT use when surface is wet or when temperatures are below 40°F (4.4°C). CAUTION: Wear adequate eye protection and breathing apparatus during cleaning and coating procedure.

APPLICATION: Mix Acrysphalt™ before using. No thinning is necessary. Apply by dipping or with adequate spray or other appropriate equipment. NSF Certified - Maximum 4 mils DFT, 96 hours cure at 77°F (25°C). For interior application plenty of ventilation and fresh air is required.

COVERAGE: For estimation purposes use 860+ sq. feet per gallon (1 mil dry film)

CAUTION: KEEP FROM FREEZING. DO NOT store in direct sunlight or where temperatures exceed 100°F (37.8°C). Container should be closed when not in use. Keep out of the reach of children. Wash tools in water. Use paint thinner if material has dried.

PACKAGING: 5 gallon pails, 55 gallon drums, 275/330 gallon tote tanks and bulk.

Material Specifications:	Requirements:
Weight per Gallon @ 77°F, ASTM D1010, (lbs)	8.30 - 8.60
Nonvolatile %, ASTM D2939	50.00 - 54.00
Viscosity @ 77°F, ASTM D562 (Kreb's Stormer Unit)	58 - 70 KU
Softening Point (0°F), ASTM D36	>250
Penetration (0.1 mm), ASTM D5	25-30
V.O.C. (lbs per gallon)	0.00-0.06
Std. Spec. for Emulsified Asphalt	
AASHTO Designation M140-70	meets spec.
ASTM Designation D977-73	meets spec.
Salt Fog, ASTM B117; 2ml/hr (FIRST appearance of rust)	198 hrs, no blistering, no loss of adhesion or re-emulsification
Resistance to water, ASTM D2939	no blistering, no loss of adhesion, no re-emulsification
Dry Time (mins) ASTM D2939 @ 5 mil wet	5-10
Shelf Life (yrs)	6 months

This information is to assist customers in determining if this product is suitable for the proposed application, and to satisfy themselves as to the suitability of the contents. Nothing herein shall constitute a warranty, express or implied, including any warranty of merchantability or fitness, nor is protection from any law or patent implied. Only products bearing the NSF Mark on the product, product packaging, and/or documentation shipped with the product are Certified. Published technical data and instructions are subject to change without notice. Contact your Allstates Coatings' representative for additional technical data and instruction.

C&B PIPING, INC.
P.O. Box 942
Leeds, AL 35094
(205) 699-0455

www.cbpiping.com

C&B Piping Coating Submittal

Exterior Coating:	Pota-Pox® Plus Series L140F-1211 Epoxy shop coating
Manufacturer:	Tnemec
Surface Prep:	Remove oil, grease, and other surface contaminants per NAPF 500-03-01 Abrasive blast clean per NAPF 500-03-04 for pipe, NAPF 500-03-05 for cast fittings
Thickness:	3-5 mils Nominal DFT

Notes:

- C&B Piping applies this coating per the Tnemec recommendations attached on the PDS.
- The shop coating provides some temporary protection during loading, transit, unloading, jobsite handling, and jobsite storage. After shipment from C&B, the shop coat will be subsequently affected by a combination of physical and environmental conditions outside of our control. If products are properly handled and stored on the jobsite, our shop coat may meet the standards to be used as the system primer as long as the application of subsequent field applied coatings are to be performed within 30 days of receipt of products. All subsequent field applied coatings must strictly follow the recommendation of the coatings manufacturer.
- The applicability of the shop coat to be subsequently used as the primer for a paint system, and the extent of testing and surface prep required at that time, is to be determined by the contractor or field paint subcontractor applying the paint system. Please refer to the PDS attached for maximum recoat window based on conditions.
- If the shop coating is not desired, it can be ordered as BARE, or fully removed by field coatings contractor per applicable NAPF 500-03 standards at cost by others.

Handling & Storage:

- Careful handling and effective storage are critical in limiting physical and environmental damage to the shop coating. Shop coatings exposed to weather and/or chemical exposure will limit the maximum recoat window and potentially cause adhesion issues.

TNEMEC

PRODUCT DATA SHEET

POTA-POX® PLUS SERIES L140F

PRODUCT PROFILE

GENERIC DESCRIPTION Polyamidoamine Epoxy

COMMON USAGE Versatile epoxy coating (factory accelerated version of L140) for protection and finishing of steel. It has excellent resistance to abrasion and is suitable for immersion service. This product can be used for lining storage tanks that contain demineralized, deionized, distilled, or potable water.

COLORS ~~1255 Beige~~, 1211 Red, ~~15BL Tank White~~. **Note:** Epoxies chalk with extended exposure to sunlight. Lack of ventilation, incomplete mixing, miscatalyzation or the use of heaters that emit carbon dioxide and carbon monoxide during application and initial stages of curing may cause yellowing to occur.

SPECIAL QUALIFICATIONS Certified by **NSF International** in accordance with **NSF/ANSI/CAN Std. 61** and the extraction requirements of **NSF/ANSI/CAN 600**. Series L140F is qualified for interior use on tanks and fittings. Reference Tnemec's certified product listing at www.nsf.org for additional details.

COATING SYSTEM

SURFACER/FILLER/PATCHER Series 215, 217, 218

PRIMERS Self-priming, or Series 1, 91-H_2O, 94-H_2O, N140, N140F, L140, V140, V140F, 141

TOPCOATS **Interior:** Series 21, 22, FC22, L140, L140F, N140, N140F, V140, V140F, 141
Exterior: Series 22, 27, 66, L69, L69F, N69, N69F, V69, V69F, 73, 118, L140, L140F, N140, N140F, V140, V140F, 141, 156, 157, 161, 180, 181, 700, V700, 701, V701, 1026, 1028, 1029, 1078, 1078V, 1080, 1081, 1094, 1095, 1096, 1224. **Note:** When topcoating with Series 700, V700, 701, or V701, an intermediate coat of Series 73, 1095, or 1096 is required. **Note:** The following maximum recoat times apply; Series 1094, 1095, 14 days. **Note:** The following recoat times apply for Series L140F: Immersion Service—Surface must be scarified after 30 days. Atmospheric Service—After 30 days, scarification or an epoxy tie-coat is required. Contact your Tnemec representative for specific recommendations.

SURFACE PREPARATION

STEEL ~~**Immersion Service:** SSPC-SP10/NACE 2 Near-White Blast Cleaning or ISO Sa 2 1/2 Very Thorough Blast Cleaning with a minimum angular anchor profile of 1.5 mils.~~
~~**Non-Immersion Service:** SSPC-SP6/NACE 3 Commercial Blast Cleaning or ISO Sa 2 Thorough Blast Cleaning with a minimum angular anchor profile of 1.5 mils. **Note:** Commercial Blast Cleaning generally produces the best coating performance for this exposure. If conditions will not permit this, in moderate exposures Series L140F may be applied to SSPC-SP2 or SP3 Hand or Power Tool Cleaned surfaces (SSPC Rust Grade Condition C).~~

CAST/DUCTILE IRON All external surfaces of ductile iron pipe and fittings shall be delivered to the application facility without asphalt or any other protective lining on the exterior surface. All oils, small deposits of asphalt paint, grease, and soluble deposits should be removed and uniformly abrasive blasted using angular abrasive in accordance with NAPF 500-03-04: External Pipe Surface condition. When viewed without magnification, the exterior surfaces shall be free of all visible dirt, dust, loose annealing oxide, rust, mold coating and other foreign matter. Any area where rust reappears before application shall be reblasted. The surface shall contain a minimum angular anchor profile of 1.5 mils (38.1 microns) (Reference NACE RP0287 or ASTM D 4417, Method C).

CONCRETE ~~Allow new cast-in-place concrete to cure a minimum of 28 days at 75°F (24°C). Verify concrete dryness in accordance with ASTM F 1869 "Standard Test Method for Measuring Moisture Vapor Emission Rate of Concrete Subfloor Using Anhydrous Calcium Chloride" (moisture vapor transmission should not exceed three pounds per 1,000 square feet in a 24 hour period), F 2170 "Standard Test Method for Determining Relative Humidity in Concrete using in-situ Probes" (relative humidity should not exceed 80%), or D 4263 "Standard Test Method for Indicating Moisture in Concrete by the Plastic Sheet Method" (no moisture present). Prepare concrete surfaces in accordance with NACE No. 6/SSPC-SP13 Joint Surface Preparation Standards and ICRI Technical Guidelines. Abrasive blast, shot blast, water jet or mechanically abrade concrete surfaces to remove laitance, curing compounds, hardeners, sealers and other contaminants and to provide an ICRI CSP 2-3 surface profile. Large cracks, voids and other surface imperfections should be filled with a recommended filler or surfacer.~~

PAINTED SURFACES **Non-Immersion Service:** Ask your Tnemec representative for specific recommendations.

PRIMED SURFACES **Immersion Service:** Scarify the Series L140F prime coat surface by abrasive-blasting with a fine abrasive before topcoating if the Series L140F prime coat has been in exterior exposure for 30 days or longer and Series 66, L69, L69F, N69, N69F, V69, N69 or 161 is the specified topcoat.

ALL SURFACES Must be clean, dry and free of oil, grease and other contaminants.

TECHNICAL DATA

VOLUME SOLIDS 66.0 ± 2.0% (mixed) †

RECOMMENDED DFT 2.0 to 10.0 mils (50 to 255 microns) per coat. **Note:** Reference the NSF website at www.nsf.org for details on the maximum allowable DFT. **Note:** Number of coats and thickness requirements will vary with the substrate, application method, and exposure. Contact your Tnemec representative.

CURING TIME AT 5 MILS DFT

Temperature	To Handle	To Recoat	Immersion
75°F (24°C)	4 hours	5 hours	7 days
65°F (18°C)	7-8 hours	9-11 hours	8 days
55°F (13°C)	12-14 hours	16-20 hours	9-10 days
45°F (7°C)	18-22 hours	28-32 hours	12-13 days
35°F (2°C)	28-32 hours	46-50 hours	16-18 days

Curing time varies with surface temperature, air movement, humidity and film thickness. **Ventilation:** When used in enclosed areas, provide adequate ventilation during application and cure. **Note:** Refer to product listings on www.nsf.org for specific potable water return to service information.

© May 17, 2023 by Tnemec Company, Inc.

Published technical data and instructions are subject to change without notice. The online catalog at www.tnemec.com should be referenced for the most current technical data and instructions or you may contact your Tnemec representative for current technical data and instructions.

POTA-POX® PLUS | SERIES L140F

VOLATILE ORGANIC COMPOUNDS

Unthinned: 0.75 lbs/gallon (90 grams/litre) (TBAc exempt)
Unthinned: 1.02 lbs/gallon (122 grams/litre)
Thinned 5% (No. 49 Thinner): 0.75 lbs/gallon (90 grams/litre) (TBAc exempt)
Thinned 5% (No. 49 Thinner): 1.01 lbs/gallon (122 grams/litre) †

HAPS

Unthinned: 0.1 lbs/gal solids
Thinned 5% (No. 49 Thinner): 0.1 lbs/gal solids

THEORETICAL COVERAGE

1,059 mil sq ft/gal (26.0 m²/L at 25 microns). See APPLICATION for coverage rates. †

NUMBER OF COMPONENTS

Two: Part A (amine) and Part B (epoxy) — One (Part A) to one (Part B) by volume.

PACKAGING

	Part A	Part B	Yield (mixed)
Large Kit	5 gallon pail	5 gallon pail	10 gallons (37.9 L)
Small Kit	1 gallon can	1 gallon can	2 gallons (7.6 L)

NET WEIGHT PER GALLON

14.62 ± 0.25 lbs (6.63 ± 0.11 kg) (mixed) †

STORAGE TEMPERATURE

Minimum 20°F (-7°C) Maximum 110°F (43°C)
For optimum application properties, material temperature should be above 60°F (16°C) prior to application.

TEMPERATURE RESISTANCE

(Dry) Continuous 250°F (121°C) Intermittent 275°F (135°C)

SHELF LIFE

Part A: 24 months; Part B: 12 months at recommended storage temperature.

FLASH POINT - SETA

Part A: 98°F (37°C) Part B: 95°F (35°C)

HEALTH & SAFETY

Paint products contain chemical ingredients which are considered hazardous. Read container label warning and Material Safety Data Sheet for important health and safety information prior to the use of this product.
Keep out of the reach of children.

APPLICATION

COVERAGE RATES

	Dry Mils (Microns)	Wet Mils (Microns)	Sq Ft/Gal (m²/Gal)
Suggested	~~6.0 (150)~~	9.0 (230)	176 (16.4)
Minimum	2.0 (50)	3.0 (75)	529 (49.2)
Maximum	10.0 (255)	15.0 (375)	106 (9.8)

Note: Roller or brush application requires two or more coats to obtain recommended film thickness. Allow for overspray and surface irregularities. Wet film thickness is rounded to the nearest 0.5 mil or 5 microns. Application of coating below minimum or above maximum recommended dry film thicknesses may adversely affect coating performance. Reference the NSF website at www.nsf.org for details on the maximum allowable DFT. †

MIXING

Start with equal amounts of Series L140F Parts A and B. Power mix contents of each container separately, making sure no pigment remains on the bottom. Pour a measured amount of Part B into a clean container large enough to hold both components. Add an equal volume of Part A to Part B while under agitation. Continue agitation until the two components are thoroughly mixed. **Note:** Both components must be above 50°F (10°C) prior to mixing. For optimum mixing and application properties, the material should be above 60°F (16°C).

Thin by volume and thoroughly mix. Failure to thoroughly mix the Part A and Part B components prior to thinning can affect product's gloss and performance. Do not use mixed material beyond pot life limits. **Note:** For application to surfaces between 35°F to 50°F (2°C to 10°C), allow mixed material to stand 30 minutes and restir before using.

THINNING

Use No. 49 Thinner. For air spray, thin up to 5% or 1/4 pint (190 mL) per gallon. No thinning necessary for airless spray. For roller or brush application, thin up to 5% or 1/4 pint (190 mL) per gallon. **Caution: Series L140F NSF certification is based on thinning with No. 49 Thinner only.** Use of any other thinner voids **NSF/ANSI/CAN Std 61**.

POT LIFE

2 hours at 50°F (10°C) 1 hour at 75°F (24°C) 30 minutes at 100°F (38°C)

SPRAY LIFE

30 minutes at 75°F (24°C)
Note: Spray application after listed times will adversely affect ability to achieve recommended dry film thickness.

APPLICATION EQUIPMENT

Air Spray

Gun	Fluid Tip	Air Cap	Air Hose ID	Mat'l Hose ID	Atomizing Pressure	Pot Pressure
DeVilbiss JGA	E	704	5/16" or 3/8" (7.9 or 9.5 mm)	3/8" or 1/2" (9.5 or 12.7 mm)	50-80 psi (3.4-5.5 bar)	10-20 psi (0.7-1.4 bar)

Low temperatures or longer hoses require higher pot pressure.

Airless Spray

Tip Orifice	Atomizing Pressure	Mat'l Hose ID	Manifold Filter
0.015"-0.019" (380-485 microns)	3500-5100 psi (241-351 bar)	1/4" or 3/8" (6.4 or 9.5 mm)	60 mesh (250 microns)

Use appropriate tip/atomizing pressure for equipment, applicator technique, and weather conditions.
Roller: Use a 3/8" or 1/2" (9.5 mm or 12.7 mm) synthetic woven nap roller cover. Use longer nap to obtain penetration on rough or porous surfaces.
Brush: Recommended for small areas only. Use high-quality natural or synthetic bristle brushes.

SURFACE TEMPERATURE

Minimum 35°F (2°C) Maximum 135°F (57°C)
The surface should be dry and at least 5°F (3°C) above the dew point. Coating will not cure below minimum surface temperature.

© May 17, 2023 by Tnemec Company, Inc.

CLEANUP Flush and clean all equipment immediately after use with the recommended thinner or MEK.

† Values may vary with color.

WARRANTY & LIMITATION OF SELLER'S LIABILITY: Tnemec Company, Inc. warrants only that its coatings represented herein meet the formulation standards of Tnemec Company, Inc. THE WARRANTY DESCRIBED IN THE ABOVE PARAGRAPH SHALL BE IN LIEU OF ANY OTHER WARRANTY, EXPRESSED OR IMPLIED, INCLUDING BUT NOT LIMITED TO, ANY IMPLIED WARRANTY OF MERCHANTABILITY OR FITNESS FOR A PARTICULAR PURPOSE. THERE ARE NO WARRANTIES THAT EXTEND BEYOND THE DESCRIPTION ON THE FACE HEREOF. The buyer's sole and exclusive remedy against Tnemec Company, Inc. shall be for replacement of the product in the event a defective condition of the product should be found to exist and the exclusive remedy shall not have failed its essential purpose as long as Tnemec is willing to provide comparable replacement product to the buyer. NO OTHER REMEDY (INCLUDING, BUT NOT LIMITED TO, INCIDENTAL OR CONSEQUENTIAL DAMAGES FOR LOST PROFITS, LOST SALES, INJURY TO PERSON OR PROPERTY, ENVIRONMENTAL INJURIES OR ANY OTHER INCIDENTAL OR CONSEQUENTIAL LOSS) SHALL BE AVAILABLE TO THE BUYER. Technical and application information herein is provided for the purpose of establishing a general profile of the coating and proper coating application procedures. Test performance results were obtained in a controlled environment and Tnemec Company makes no claim that these tests or any other tests, accurately represent all environments. As application, environmental and design factors can vary significantly, due care should be exercised in the selection and use of the coating.

Tnemec Company, Inc. 6800 Corporate Drive Kansas City, Missouri 64120-1372 +1 816-483-3400 www.tnemec.com

© May 17, 2023 by Tnemec Company, Inc.

Series 2100

MEGAFLANGE®
Restrained Flange Adapter
U.S. Patent Nos. 4627774 and 5071175

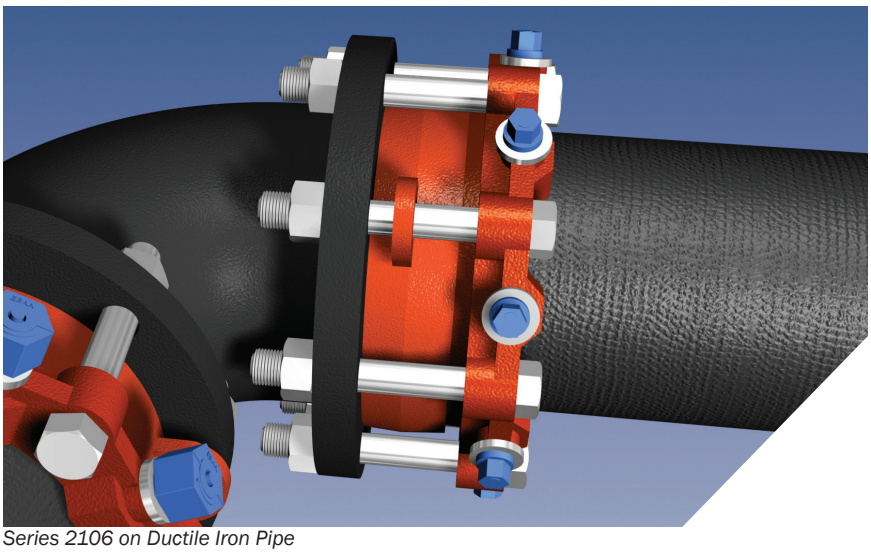

Series 2106 on Ductile Iron Pipe

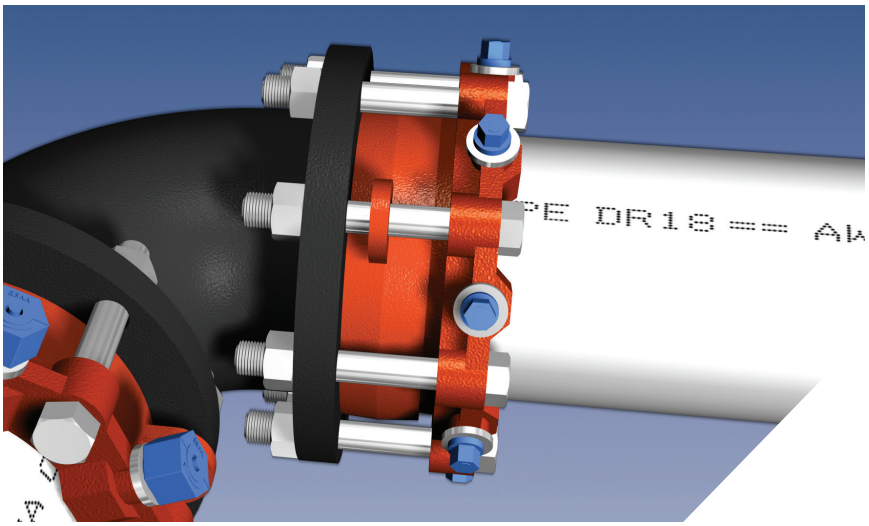

Series 2106 on C900 PVC Pipe

Features and Applications:

- MEGAFLANGE adapts and restrains plain end Ductile Iron, PVC, Carbon Steel and HDPE pipe to flanged pipe or fittings, where the flange conforms to ANSI/AWWA C111/A21.11 with flange surface facing in accordance with ANSI/AWWA C207 of the latest revision.
- Meets ANSI B16.5 Class 150/125 drilling pattern.
- Flange Bolts are zinc coated, fastener class coated bolts or stainless steel bolts are available
- Not for use on plain end fittings
- MEGA-BOND® Restraint Coating System
- For more information regarding MEGA-BOND, refer to our web site @ www.ebaa.com
- Minimum 2 to 1 Safety Factor
- Fully Restrained
- Constructed of ASTM A536 Ductile Iron
- UL listed on sizes 3 inch through 12 inch
- FM approved on sizes 4 inch through 12 inch on C900 Class 150 and Class 200 PVC Pipe
- Pipe can be cut to length in the field
- Joint deflection up to 5°
- Easy dismantling allows fast removal of valves, meters or fittings for replacement or repair

For use on water or wastewater pipelines subject to hydrostatic pressure and tested in accordance with either AWWA C600, C605 or ASTM D2774.

Sample Specification

Restrained flange adapters shall be used in lieu of threaded or welded flanged spool pieces. Flanged adapters shall be made of ductile iron conforming to ASTM A536 and have flange bolt circles that are compatible with ANSI/AWWA C110/A21.10 (125#/Class 150 Bolt Pattern).

Restraint for flange adapter shall consist of a plurality of individual actuated gripping wedges to maximize restraint capability. Torque limiting actuating screws shall be used to insure proper initial set of gripping wedges.

The flange adapters shall be capable of deflection during assembly or permit lengths of pipe to be field cut to allow a minimum 0.6 inch gap between the end of the pipe and the mating flange without affecting the integrity of the seal.

All internal surfaces of the gasket ring (wetted parts) shall be lined with a minimum of 15 mils of fusion bonded epoxy conforming to the applicable requirements of ANSI/AWWA C213. The coating shall meet ANSI/NSF-61. Exterior surfaces of the gasket ring shall be coated with a minimum of 6 mils of fusion bonded epoxy conforming to the applicable requirements of ANSI/AWWA C116/A21.16.

Restraint Ring coated with MEGA-BOND® Restraint Coating System, More information regarding MEGA-BOND can be found at www.ebaa.com.

Pressure ratings shall be a minimum of those shown in the table within current brochure.

The flange adapter shall be the Series 2100 MEGAFLANGE® Restrained Flange Adapter as produced by EBAA Iron, Inc. or approved equal.

Copyright 2021 © EBAA Iron, Inc.

Series 2100 Submittal Reference Drawing

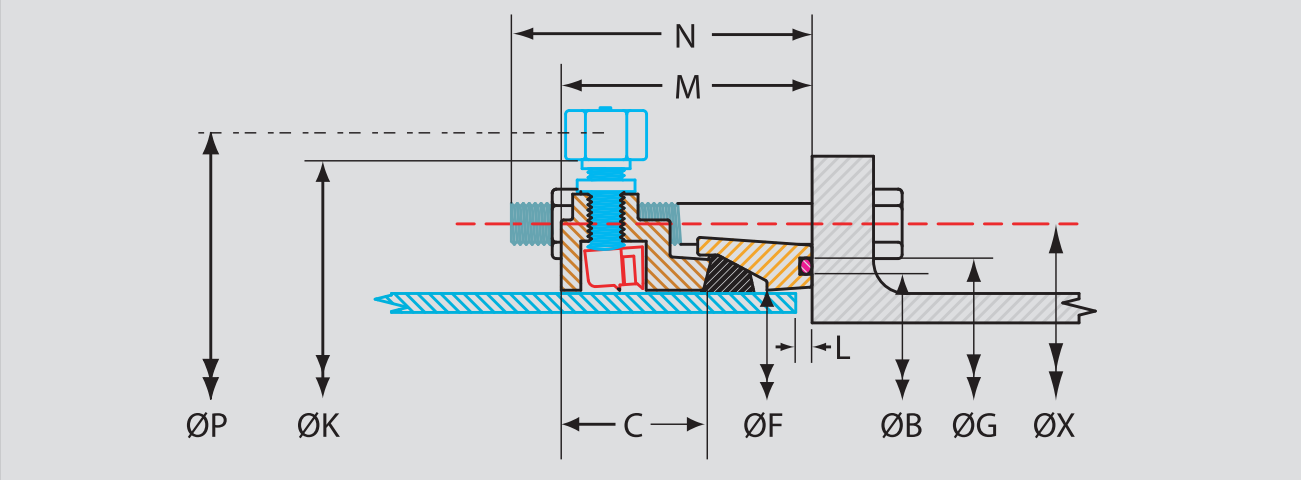

Nominal Pipe Size	Series Number	Restraint Ring K	Restraint Ring F	Restraint Ring C	Gasket Ring F	Gasket Ring B	Gasket Ring G	Bolts No.	Bolts Dia.	Bolts Length	Bolts X	L MAX.	Assembly Deflection Degrees	M	P*	Ship Weight (lbs.)
3	2103	7.5	4.1	2.2	4.1	4.3	4.9	4	⅝	5½	6.00	0.7	5.0	4.0	9.2	14
4	2104	9.0	4.9	2.2	4.9	5.4	6.0	8	⅝	5½	7.50	0.6	5.0	4.0	10.0	20
6	2106	11.0	7.0	2.3	7.0	7.5	8.1	8	¾	6	9.50	0.8	5.0	4.3	12.1	32
8	2108	13.5	9.2	2.4	9.2	9.8	10.4	8	¾	6	11.75	0.9	5.0	4.5	14.3	38
10	2110	16.0	11.2	2.5	11.2	11.8	12.4	12	⅞	7½	14.25	1.0	3.0	4.7	16.3	65
12	2112	19.0	13.3	2.5	13.3	13.8	14.4	12	⅞	7½	17.00	1.0	3.0	4.8	18.4	73
14	2114	21.0	15.5	2.5	15.5	16.1	16.9	12	1	8	18.75	1.3	2.0	5.0	20.6	89
16	2116	23.5	17.6	2.5	17.6	18.2	19.0	16	1	8	21.25	1.3	2.0	5.0	22.6	109
18	2118	25.0	19.7	2.6	19.7	20.2	21.0	16	1⅛	8½	22.75	1.3	1.5	5.1	24.7	134
20	2120	27.3	21.8	2.6	21.8	22.4	23.2	20	1⅛	8½	25.00	1.3	1.5	5.1	26.8	157
24	2124	32.0	26.0	2.6	26.0	26.7	27.5	20	1¼	8½	29.50	1.3	1.0	5.1	31.0	192
30	2130	38.5	32.2	3.3	32.2	32.9	34.1	28	1¼	11	36.00	2.0	1.0	6.0	38.8	296
36	2136	45.5	38.5	3.3	38.5	39.2	40.4	32	1½	11**	42.75	2.0	1.0	6.0	44.6	426
42	2142	52.3	44.7	4.1	44.7	45.8	47.0	36	1½	14**	49.50	2.0	1.0	8.0	50.8	642
48	2148	58.8	51.0	4.1	51.0	52.1	53.3	44	1½	14**	56.00	2.0	1.0	8.0	57.1	797

* The "P" dimensions is measured with torque-limiting nuts twisted off.
** Double ended rod in lieu of bolt

Nominal Pipe Size	Minimal Distance Required To Install N
3	4.75
4	4.56
6	5.00
8	4.88
10	6.31
12	6.25
14	6.62
16	6.56
18	6.94
20	6.81
24	6.62
30	8.88
36	8.63
42	11.25
48	11.38

MEGAFLANGE TESTING RESULTS

PVC TESTING

- Quick Burst Test
- DR18 tested to 755 PSI
- DR14 tested to 985 PSI
- Long Term Pressure Test
- On DR18 PVC pipe at 615 PSI for 1000 hours without failure
- Cyclic Pressure Test
- DR18 tested from 94 to 188 PSI for over 1,000,000 cycles

FM APPROVED

DUCTILE IRON AND CARBON STEEL TESTING

- Leakage Test (one minute required)
- Tested to twice rated pressure without leakage
- Hydrostatic Test (one minute required)
- 3 inch though 6 inch sizes tested to 5 times rated pressure
- 8 inch and 10 inch sizes tested to 4 times rated pressure
- 12 inch size tested to 3 times rated pressure
- Flexural Test
- Tested to withstand a bending moment based on requirements of NFPA 12-1991 "Standard for Installation of Sprinkler Systems"

Note: Dimensions are in inches and are subject to change without notice. All Dimensions are ± 1%.

Pipe Size	Ductile Iron Pipe Pressure (PSI)	Carbon Steel Pipe* Pressure (PSI)	C900 PVC Pipe DR14 Pressure (PSI)	C900 PVC Pipe DR18 Pressure (PSI)	C900 PVC Pipe DR25 Pressure (PSI)	C900 PVC Pipe DR32.5 Pressure (PSI)	IPS PVC Pipe* SDR17 Pressure (PSI)	IPS PVC Pipe* SDR21 Pressure (PSI)	IPS PVC Pipe* SDR26 Pressure (PSI)
3	350	350	-	-	-	-	250	200	160
4	350	350	305	235	165	-	250	200	160
6	350	350	305	235	165	-	250	200	160
8	350	350	305	235	165	-	250	200	160
10	350	350	305	235	165	-	250	200	160
12	350	350	305	235	165	-	250	200	160
14	350	-	-	235	165	125	-	-	-
16	350	-	-	235	165	125	-	-	-
18	300	-	-	235	165	125	-	-	-
20	250	-	-	235	165	125	-	-	-
24	200	-	-	150	165	125	-	-	-
30	150	-	-	-	-	-	-	-	-
36	150	-	-	-	-	-	-	-	-
42	150	-	-	-	-	-	-	-	-
48	150	-	-		-	-	-	-	-

*Transition Gasket Required
NOTE: For Application on HDPE pipe see EBAA's HDPE Restraint Catalog Sheet.

MEGAFLANGE Components

The Series 2100 MEGAFLANGE restrained flange adapter is comprised of two rings. The first is the restraint ring which incorporates wedges around the circumference of the ring to grip the pipe firmly and securely. The wedge style restraint offers enormous pullout strength when compared to set screw restraints. The resiliency of the wedge style restraint allows the MEGAFLANGE to withstand severe moment loads. The restraint ring and it's sub-components are protected from corrosion by the MEGA-BOND® Restraint Coating System. For more information regarding MEGA-BOND see our MEGA-BOND Brochure found at www.ebaa.com.

The second ring is the gasket ring which separates the seals dedicated to each sealing surface. This ring allows pipe to be cut to lengths in the field at a tolerance of 0.6 inch or more. In addition, the gasket ring also enables the joint to deflect during assembly. The gasket ring is coated with a NSF 61 approved Fusion Bonded Epoxy (FBE) so that it may be utilized on potable drinking water systems.

DEFLECTION

Traditional flanged joint connections require a tremendous amount of torque on the bolts to achieve a good seal. The pipe layout must be precisely planned to avoid misalignment errors due to deviations in appurtenances of pipe fabrication.

The Series 2100 MEGAFLANGE is a speedy, on-site fabrication tool which is generous in its deflection limits, from 0.5° to 5° depending on pipe size. The deflection capabilities provided by the gasket ring allow offset of almost nineteen inches of an eighteen foot length of pipe through the eight inch size.

1. Identify the pipe. The MEGAFLANGE 2100 Flange Adapter, sizes 3 inch through 12 inch, is designed for use on ductile iron pipe, PVC (C900 & IPS O.D. (ASTM D2241)) pipe, HDPE pipe, and carbon steel pipe. Check to see if the spacers under the screws are in place. If the pipe is ductile iron or C.I. O.D. PVC (C900) DO NOT REMOVE THE SPACERS. If the pipe is carbon steel or IPS O.D. PVC, REMOVE THE SPACERS (sizes 4-inch through 12-inch). The 3-inch size is designed for use on ductile iron, IPS O.D. PVC pipe. Sizes 30-inch and larger are designed for ductile iron pipe only. There are no spacers on the 3 inch and the 14 inch and larger sizes.

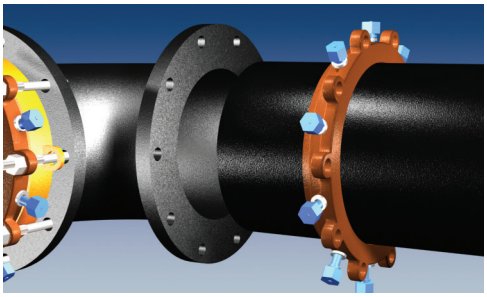

2. Cut the pipe to the required length. Clean the end of the pipe for a length approximately one foot using a wire brush if needed, removing all excess paint and foreign material. Also clean the opposing flange to be connected to the 2100. Place the 2100 restraint ring on the clean pipe with the lip facing the plain end.

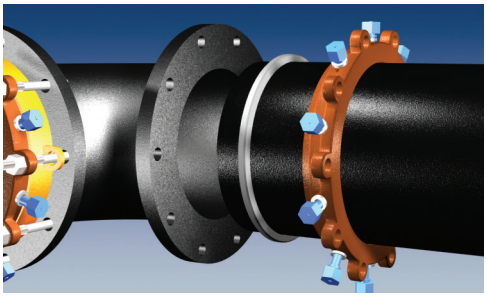

3. Lubricate and place the EBAA-Seal™ Gasket on the clean pipe following the restraint ring. (USE A TRANSITION GASKET IN PLACE OF THE EBAA-SEAL GASKET FOR CARBON STEEL AND IPS. O.D. PVC PIPE.)

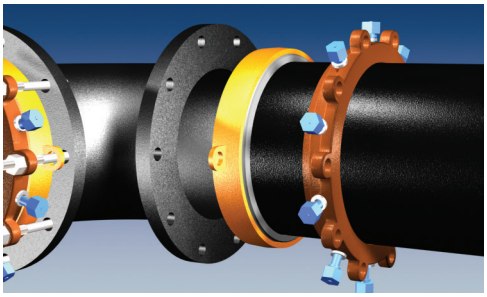

4. Place the O-ring into the groove of the 2100 Gasket Ring. (This step may have been completed at the factory, check Gasket Ring to see if O-ring is already in place.) Place the Gasket Ring on the pipe with the O-ring facing the pipe end and the gasket recess facing the EBAA-Seal (or transition) Gasket and restraint ring.

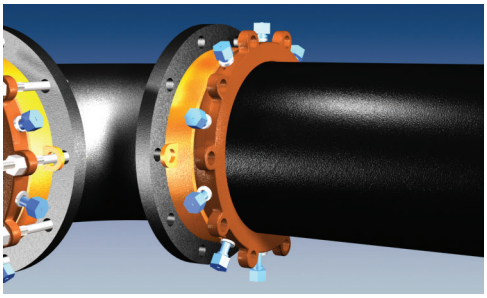

5. Bring the pipe and flanges together within the maximum assembled deflection and maximum allowable gap “L” to the flange face. Slide the gasket ring, gasket and restraint ring until contact is made with the opposing flange.

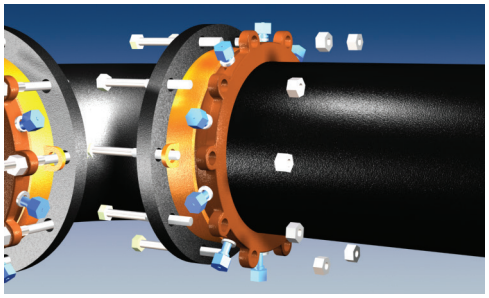

6. Insert and tighten all flange bolts. Torque all flange bolts an alternating manner to the value listed in Table 1.1. Be sure to make any necessary joint deflection before tightening the actuating screws. Joint deflection should not exceed the maximum allowable deflection. Be sure that deflection of the joint does not cause the end of the pipe to be separated from the opposing flange more than the maximum allowable gap “L”.

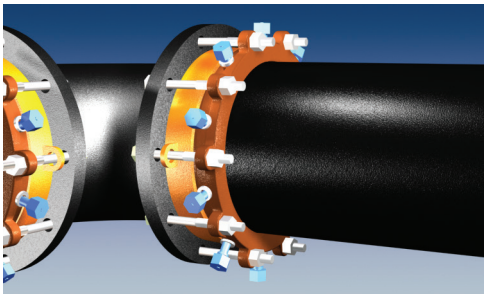

7. Tighten the actuating screws in an alternating manner until all wedges touch the pipe. Continue tightening the nuts in an alternating pattern until all the torque-limiting nuts have been twisted off.

Table 1.1 Flange Bolt Torques

Nominal Pipe Size	Bolt Torque (ft-lbs.)
3	45 - 60
4 - 6	75 - 90
8 - 24	90 - 110
30 - 48	110 - 130

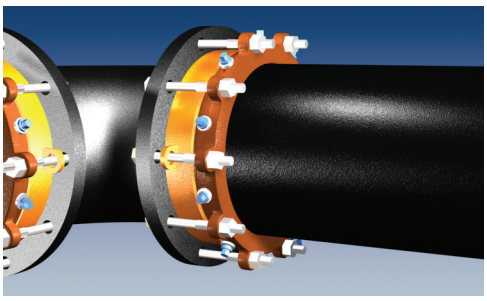

8. If removal is necessary, utilize the ⅝ inch hex head provided. For reinstallation, repeat steps 2 through 7, torqueing the actuating screws to 70 ft.-lbs. or until the hex heads bottom out on the spacers or gland.

EBAA IRON Sales, Inc.
P.O. Box 857, Eastland, TX 76448
Tel: (254) 629-1731
Fax: (254) 629-8931
(800) 433-1716 within US and Canada
contact@ebaa.com
www.ebaa.com

INFACT

MADE IN U.S.A.

INFACT CORPORATION
WATERWORKS PRODUCTS

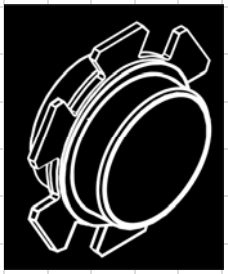

FOSTER ADAPTOR
SPECIFICATIONS

WATERWORKS
PRODUCTS

TOLL FREE: 888-773-9130

email: info@infactcorp.com
www.infactcorp.com

ENGINEERING DATA / PRODUCT OVERVIEW

FOSTER ADAPTOR

BOLT-THRU MECHANICAL JOINT RESTRAINT

RESTRAIN MJ VALVES AND FITTINGS TO EACH OTHER

PRODUCT APPLICATIONS

Valves to tees, crosses

90's,45's other fittings

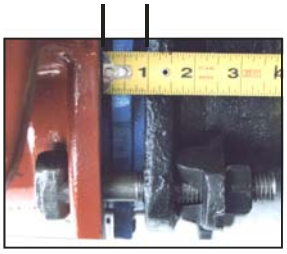

APPROXIMATE DRAW-UP LENGTHS

3 to 12-in	1-inch
14 to 24-in	2-inches
30 to 36-in	3-inches

PRODUCT BENEFITS

1. No pipe to saw
2. Space saving and light-weight
3. No possibility of pipe damage since no pipe connection is used
4. Secure bolt-through design makes for labor-saving, easy and fast installation
5. Made in U.S.A., ductile iron
   3 to 24-inch: 350psi rating
   30 to 36-inch: 250psi rating
6. Up to four times fewer bolts to tighten
7. Comes complete with all accessories
8. Close-coupled connections allow you to pre-assemble valves and fittings, then transport to the job site
9. Less chance for leakage. Two MJ's are connected using one accessory kit rather than the standard two
10. Available in standard asphalt or epoxy coating. Sizes 14 to 36-inch ship standard with epoxy coating

COATINGS	Asphalt or Epoxy on sizes 3 to 12-inch; 14-inch and above, epoxy is standard. Protecto 401 epoxy is available for sewer applications.
ACCESSORY PAKS	Corten included, Teflon® blue and stainless optional
	Special Long-bolt Accessory Paks available for C110 full-body fittings and certain butterfly valves with thicker bolt flanges.

IN FACT
SALES: (888) 773-9130
FAX: (615) 206-9787
EMAIL: info@infactcorp.com
MADE IN U.S.A.
www.infactcorp.com

ENGINEERING DATA / PRODUCT CHECKLIST

FOSTER ADAPTOR

BOLT-THRU MECHANICAL JOINT RESTRAINT

RESTRAIN MJ VALVES AND FITTINGS TO EACH OTHER

SIZES	3, 4, 6, 8, 10, 12, 14, 16, 18, 20, 24, 30, 36
TYPICAL USES	Restrains valves to tees and valves to crosses Restrains reducers and other fittings to tees or crosses Restrains 90's and other fittings to each other
ADVANTAGES (Product)	✔ Tough, BOLT-THROUGH Restraint ✔ Takes the place of <u>two</u> bolt-on lug type products ✔ No pipe to saw and no lug bolts to tighten ✔ Ultra-compact; saves critical space; 1 to 2-inch draw-up length ✔ Quicker to install than to saw pipe and tighten up to 4 times more bolts ✔ One accessory kit to install (included in price) ✔ Integral casting, no welds ✔ 14, 16, 18, 20, 24, 30, 36-in epoxy coated — standard
ADVANTAGES (Manufacturer) INFACT PRODUCTS ARE AVAILABLE FROM YOUR LOCAL WATERWORKS DISTRIBUTOR	✔ Products made in U. S. A. and Infact is an American-owned company ✔ BIG inventory; Quick shipping; No extra charge to drop ship ✔ No minimum order
HYDRANT AND OTHER CONNECTIONS	1) When using 3-inch to 14-inch Fosters on both the "branch" and "run" of compact tees or crosses, the standard accessory bolts may obstruct each other. Substitution of shorter bolts should solve this. Conduct a trial connection prior to field assembly. Special short-bolt accessory paks are available. Contact Infact for more info. 2) Because of the large variety of hydrant designs, we strongly recommend that you conduct a trial connection prior to field assembly. Foster Adaptors can be assembled on many hydrant shoes that have adequate space for bolt clearance, including M&H Model 129, Mueller Centurion and Clow Medallion. Contact Infact for more info.
OPTIONS	1) NSF 61, 7-mil fusion bonded epoxy conforming to AWWA C116/A21.16-09 as well as the coating, surface preparation and application requirements of ANSI/ AWWA C550. 2) 40-mil Protecto 401 epoxy coating for Foster Adaptor sewer applications. Contact Infact for specs and availability. 3) *Long-bolt Paks,* to restrain C110 full-bodied fittings, certain valves, etc. with thicker bolt flanges.

IN FACT

SALES: (888) 773-9130
FAX: (615) 206-9787
EMAIL: info@infactcorp.com

MADE IN U.S.A.

www.infactcorp.com

ENGINEERING DATA / CAD DRAWINGS

FOSTER ADAPTOR

BOLT-THRU MECHANICAL JOINT RESTRAINT

RESTRAIN MJ VALVES AND FITTINGS TO EACH OTHER

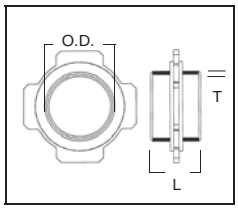

3-INCH

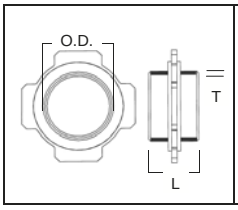

4-INCH

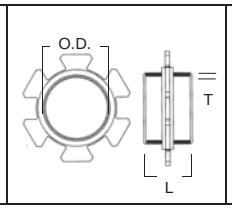

6-INCH

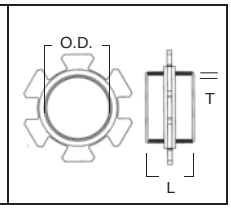

8-INCH

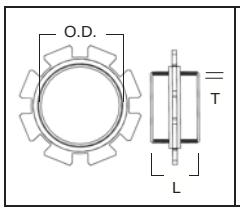

10-INCH

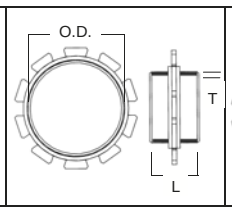

12-INCH

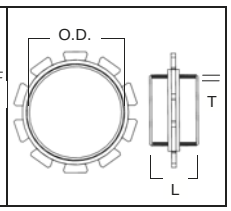

14-INCH

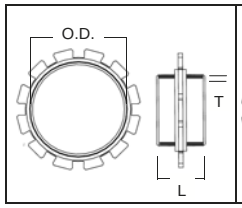

16-INCH

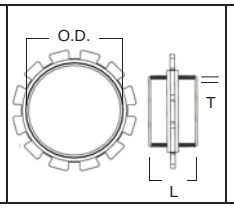

18-INCH

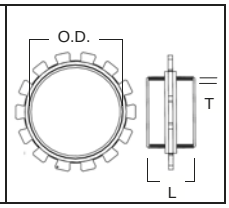

20-INCH

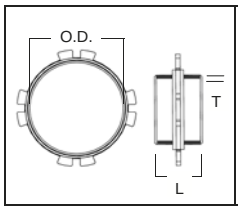

24-INCH

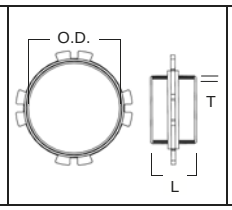

30-INCH

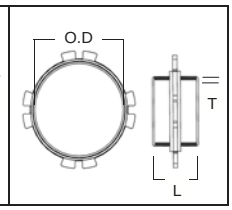

36-INCH

LATEST SIZES ADDED: 3-inch, 30-inch, and 36-inch

SIZE, inches	DIMENSIONS, inches			ADAPTOR Weight	PAK Weight	TOTAL Weight
	O. D.	T	L	lbs.	lbs.	lbs.
3	3.96	.34	4	6	5	11
4	4.80	.35	4	8	8	16
6	6.90	.37	4	16	9	25
8	9.05	.39	4	19	10	29
10	11.10	.40	4	29	13	42
12	13.20	.43	4.5	31	15	46
14	15.30	.48	6.75	55	16	71
16	17.40	.51	6.75	60	20	80
18	19.50	.55	6.75	92	16	108
20	21.60	.58	6.75	101	20	121
24	25.80	.62	6.75	117	28	135
30	32.00	.66	7.75	153	68	221
36	38.30	.75	7.75	220	86	306

Adaptor sizes, dimensions and weights are nominal

IN FACT

SALES: (888) 773-9130
FAX: (615) 206-9787
EMAIL: info@infactcorp.com

MADE IN U.S.A.

www.infactcorp.com

ENGINEERING DATA / SPECIFICATIONS

FOSTER ADAPTOR

BOLT-THRU MECHANICAL JOINT RESTRAINT

RESTRAIN MJ VALVES AND FITTINGS TO EACH OTHER

STANDARD ADAPTORS, STANDARD ACCESSORIES

The Infact Foster Adaptor is made in the U. S. A. It meets the ductile iron and working pressure specifications of AWWA compact fittings, ANSI/AWWA C153/A21.53 and C110/A21.10 — American National Standard for Ductile Iron Compact Fittings, 3-Inch Through 36-Inch (76mm Through 914mm) for Water Service.

SAMPLE SPECIFICATION: Mechanical joint (MJ) valves and fittings shall be connected using a bolt-through positive restraint mechanism manufactured of U. S. A. ductile iron conforming to ASTM A536, 65-45-12. The positive restraint device shall connect the valves and/or fittings at a linear distance not to exceed three (3) inches and without attachment to pipe. The device shall come complete with all accessories, including standard styrene butadiene rubber (SBR) MJ gaskets conforming to the latest revision of AWWA C111/ASTM F-477 and weathering steel (Corten) bolts conforming to AWWA C111/A21.11 and ASTM A242. Nuts for 3 through 12-inch sizes shall be SAE Grade 5 steel with black oxide coating. Nuts for 14-inch and larger adaptors shall be heavy hex Corten steel conforming to ASTM A242. Sizes 3-12-inch of the bolt-through MJ positive restraining device shall be supplied with an NSF 61 asphaltic seal coating in accordance with ANSI/AWWA C104/A21.4. Sizes 14-36-inch shall be supplied with NSF 61, 7-mil. fusion bonded epoxy conforming to AWWA C116/A21.16-09 as well as the coating, surface preparation and application requirements of ANSI/AWWA C550. For sewer installations, the device shall be supplied with 40-mil Protecto 401 epoxy. [Epoxy coating, blue Teflon® coated, and stainless steel hardware are available for all sizes.] The device shall be used with standard mechanical joint fittings (AWWA C110 or C153) and valves. The device shall be Infact Corporation FOSTER ADAPTOR or equal.

EPOXY ADAPTORS, BLUE FLUOROCARBON (TEFLON®) ACCESSORIES

The Infact Foster Adaptor is made in the U. S. A. It meets the ductile iron and working pressure specifications of AWWA compact fittings, ANSI/AWWA C153/A21.53 and C110/A21.10 — American National Standard for Ductile Iron Compact Fittings, 3-Inch Through 36-Inch (76mm Through 914mm) for Water Service.

SAMPLE SPECIFICATION: Mechanical joint (MJ) valves and fittings shall be connected using a bolt-through positive restraint mechanism manufactured of U. S. A. ductile iron conforming to ASTM A536, 65-45-12. The positive restraint device shall connect the valves and/or fittings at a linear distance not to exceed three (3) inches and without attachment to pipe. The device shall come complete with all accessories, including standard styrene butadiene rubber (SBR) MJ gaskets conforming to the latest revision of AWWA C111/ASTM F-477 and blue fluorocarbon [Teflon®] coated bolts and nuts conforming to AWWA C111/A21.11. The bolt-through MJ positive restraining device and the ductile iron spacers shall be supplied with an NSF 61, 7-mil. fusion bonded epoxy conforming to AWWA C116/A21.16-09 as well as the coating, surface preparation and application requirements of ANSI/AWWA C550. For sewer installations, the device shall be supplied with 40-mil Protecto 401 epoxy. The device shall be used with standard mechanical joint fittings (AWWA C110 or C153) and valves. The device shall be Infact Corporation FOSTER ADAPTOR or equal.

EPOXY ADAPTORS, STAINLESS STEEL ACCESSORIES

The Infact Foster Adaptor is made in the U. S. A. It meets the ductile iron and working pressure specifications of AWWA compact fittings, ANSI/AWWA C153/A21.53 and C110/A21.10 — American National Standard for Ductile Iron Compact Fittings, 3-Inch Through 36-Inch (76mm Through 914mm) for Water Service.

SAMPLE SPECIFICATION: Mechanical joint (MJ) valves and fittings shall be connected using a bolt-through positive restraint mechanism manufactured of U. S. A. ductile iron conforming to ASTM A536, 65-45-12. The positive restraint device shall connect the valves and/or fittings at a linear distance not to exceed three (3) inches and without attachment to pipe. The device shall come complete with all accessories, including standard styrene butadiene rubber (SBR) MJ gaskets conforming to the latest revision of AWWA C111/ASTM F-477. The bolt-through MJ positive restraining device and the ductile iron spacers shall be supplied with an NSF 61, 7-mil. fusion bonded epoxy conforming to AWWA C116/A21.16-09 as well as the coating, surface preparation and application requirements of ANSI/AWWA C550. For sewer installations, the device shall be supplied with 40-mil Protecto 401 epoxy.The bolts and nuts shall be ASTM A193 type 304 or 316 stainless (as requested) and the nuts shall be Teflon® coated. The device shall be used with standard mechanical joint fittings (AWWA C110 or C153) and valves. The device shall be Infact Corporation FOSTER ADAPTOR or equal.

NOTE: When using 3-inch to 14-inch Fosters on both the "branch" and "run" of compact tees or crosses, the standard accessory bolts may obstruct each other. Substitution of shorter bolts should solve this. Conduct a trial connection prior to field assembly. Special short-bolt accessory paks are available. For C110 full-body fittings and certain thick-flange valves, Infact Long-bolt Paks are available. Because of the large variety of hydrant designs, we strongly recommend that you conduct a trial connection prior to field assembly. Foster Adaptors can be assembled on many hydrant shoes that have adequate space for bolt clearance, including M&H Model 129, Mueller Centurion and Clow Medallion. Contact Infact for more info.

IN FACT

SALES: (888) 773-9130
FAX: (615) 206-9787
EMAIL: info@infactcorp.com

MADE IN U.S.A.

www.infactcorp.com

IN FACT

WORK-SAVERS
SPACE-SAVERS

Installer's Guide

PRODUCT	DESCRIPTION	INSTALLED DRAW-UP DISTANCE	TYPE OF JOINT		RECOMMENDED APPLICATIONS		
			MJ	FLANGE	VALVES	FITTINGS	HYDRANTS
FOSTER ADAPTOR	Bolt-thru MJ Adaptor	Sizes 3-12: 1-inch --- Sizes 14-24: 2-inches --- Sizes 30-36: 3-inches	✔		✔	✔	
FLEX T-2	Self-Restraining 2-way Tee	0 inches --- (Direct Restraint)	✔	✔	✔	✔	
FLEX T-3	Self-Restraining 3-way Tee	0 inches --- (Direct Restraint)	✔	✔	✔	✔	
FLEX ADAPTOR	Ultra-Compact Coupling	8 1/2 inches	✔	✔	✔	✔	✔
FLEX REDUCER	Ultra-Compact Reducer	8 1/2 inches	✔	✔	✔	✔	✔

IN FACT

SALES: (888) 773-9130
FAX: (615) 206-9787
EMAIL: info@infactcorp.com

MADE IN U.S.A.

www.infactcorp.com

Comparison of Waterworks Products that Restrain Valves, Fittings and Hydrants

	INFACT **FOSTER ADAPTOR**	LUG PRODUCT	INFACT **FLEX T-2 & T-3**	ANCHOR COUPLING	INFACT **FLEX ADAPTOR**	GRIP RINGS	INFACT **FLEX REDUCER**
Built-in full axial, circumferential restraint. Restraining forces are spread more evenly than in products using radial bolts or lugs.	X		X	X	X	X	X
Bolt-through restraint	X						
Angular deflection for easy restraint of unaligned fittings			X		X	X	X
Full axial rotation for easy alignment of bolt holes			X	X	X	X	X
Two independent pivot points adjacent to fittings for better close quarters installation and easier connection to misaligned fittings			X		X		X
Requires ONE device to connect fittings (rather than two or more)	X		X	X	X		X
Do not have to cut and install a piece of pipe in order for device to restrain fittings	X			X	X		
Uses standard bolts and gaskets and no radial bolts on pipe that operator may forget to or improperly tighten			X	X	X	X	
Field adaptable to being connected to any length pipe		X				X	
Field adaptable to restrain either MJ or flange joints using interchangeable glands			X		X		X

IN FACT

SALES: (888) 773-9130
FAX: (615) 206-9787
EMAIL: info@infactcorp.com

MADE IN U.S.A.

www.infactcorp.com

IN FACT

WATERWORKS
Work and Space-Savers

FOSTER ADAPTOR

BOLT-THRU MJ RESTRAINT FOR VALVES AND FITTINGS

- No pipe to cut
- Up to 75% fewer bolts
- Saves space
- Easier to lift and install
- Comes with all accessories

FLEX ADAPTOR

SPACE-SAVING MJ OR FLANGE RESTRAINT FOR VALVES AND FITTINGS

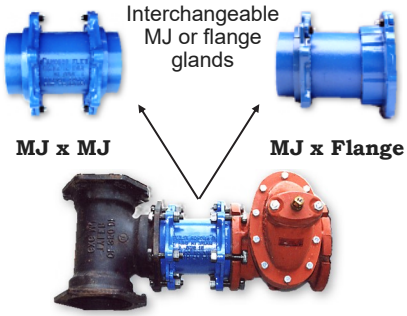

- Rotating and deflecting MJ glands make this the easiest way to align and restrain MJ or flange valves, fittings, and hydrants
- Available in 6-inch MJ x MJ, MJ x flange, flange x flange

U. S. PATENT NO. 6015170

FLEX REDUCER

SPACE-SAVING MJ OR FLANGE REDUCER FOR VALVES AND FITTINGS

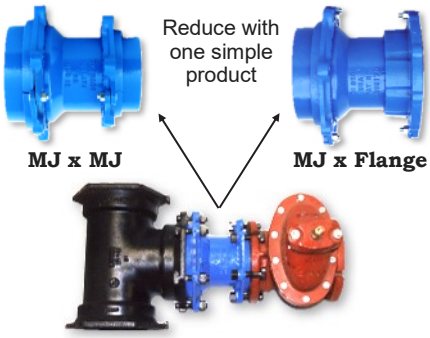

- Save up to 2-feet of space
- Faster, simpler installation
- Uses standard accessories
- EZ-change MJ or flange glands
- EZ-align MJ glands spin and deflect

U. S. PATENT NO. 6015170

FLEX T-2

DIRECT-TO-TEE RESTRAINT FOR MJ OR FLANGE VALVES AND FITTINGS

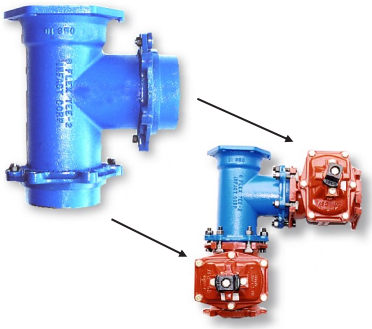

- Restrain 2 valves or fittings to the T-2
- *FAST* installation — no couplings needed
- EZ-to-align MJ glands spin and deflect
- MJ x MJ, MJ x flange, or flange x flange
- Same glands fit all Flex products

U. S. PATENT NO. 6015170

FLEX T-3

DIRECT-TO-TEE RESTRAINT FOR MJ OR FLANGE VALVES AND FITTINGS

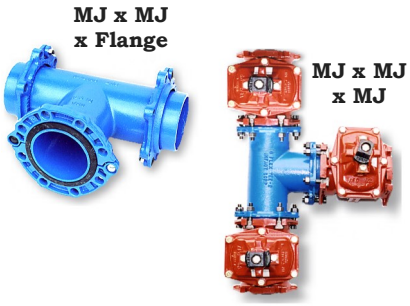

- Restrain 3 valves or fittings to the T-3
- Choose MJ or flange glands
- Heavy-duty split glands
- Epoxy coating standard
- Direct-to-tee restraint

U. S. PATENT NO. 6015170

MUD PLUGS, INSULATION

VALVE BOX DEBRIS PLUGS METER BOX and VAULT INSULATION

- Simple push-in, pull-out installation
- Plug compresses for tight seal
- Won't absorb water or freeze
- Flexible, non-conductive poly handle
- Custom sizes available

Infact is North America's largest waterworks insulation manufacturer

CALL YOUR LOCAL WATERWORKS DISTRIBUTOR FOR PRICES

IN FACT

(888) 773-9130
info@infactcorp.com

MADE IN U.S.A.

www.infactcorp.com

MEGA-COUPLING®

Series 3800

Restrained Coupling

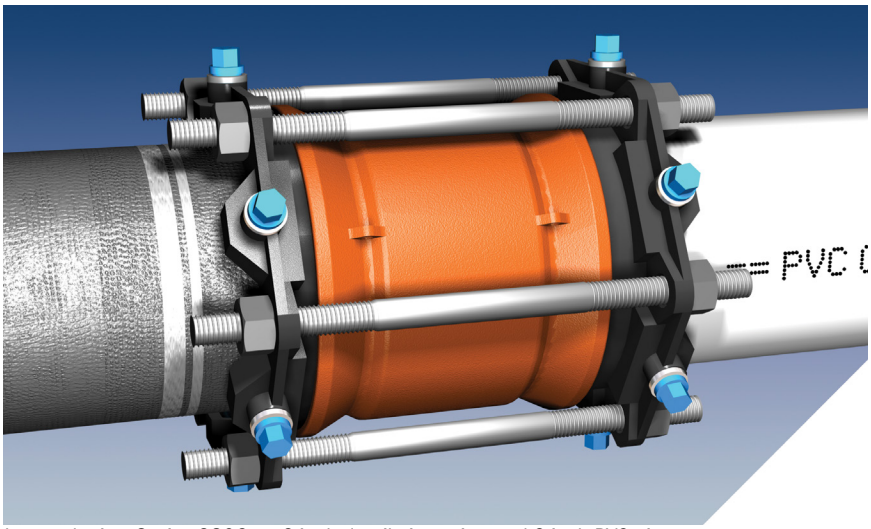

Image depicts Series 3806 on 6 inch ductile iron pipe and 6 inch PVC pipe.

The Series 3800 are designed to restrain forces based on the maximum working pressure ratings listed in the Pressure Ratings Table.

Forces experienced due to expansion/contraction of the pipe require special consideration.

For use on water or wastewater pipelines subject to hydrostatic pressure and tested in accordance with either AWWA C600 or ASTM D2774.

Features and Applications:

- **For use on:**
  - Ductile Iron Pipe, 4 in. - 48 in.
  - C900 or ASTM D2241 PVC Pipe, 4 in. - 12 in.
  - C905 PVC Pipe, 14 in. - 36 in.
  - Carbon Steel Pipe, 4 in. - 12 in.
  - HDPE Pipe, 4 in. - 12 in.
- **Minimum 2 to 1 Safety Factor**
- **MEGA-BOND® Restraint Coating System**
  For more information regarding MEGA-BOND, refer to our web site at www.ebaa.com
- **Constructed of ASTM A536 Ductile Iron**
- **Corrosion Resistant, low alloy, high strength steel bolts and nuts per ANSI/AWWA C111/A21.11**
- **Couplings meets or exceeds the applicable requirements of:**
  - AWWA C219
  - ASTM A536
  - ANSI/AWWA C111/A21.11
  - ASTM D2000

					Pressure Ratings (PSI)									
					HDPE Pipe			C900 PVC Pipe			C905 PVC Pipe			
Nominal Pipe Size	Series Number	Shipping Weight	Ductile Iron Pipe	Steel Pipe	DR11	DR13.5	DR17	DR14	DR18	DR25	DR18	DR25	DR32.5	DR41
4	3804	36.50	350	350	160	130	100	305	235	165	-	-	-	-
6	3806	49.40	350	350	160	130	100	305	235	165	-	-	-	-
8	3808	67.93	350	350	160	130	100	305	235	165	-	-	-	-
10	3810	85.46	350	350	160	130	100	305	235	165	-	-	-	-
12	3812	103.98	350	350	160	130	100	305	235	165	-	-	-	-
14	3814	157.18	350	-	-	-	-	-	-	-	235	165	125	80
16	3816	183.02	350	-	-	-	-	-	-	-	235	165	125	80
18	3818	201.64	250	-	-	-	-	-	-	-	200	165	-	-
20	3820	229.93	250	-	-	-	-	-	-	-	200	165	-	-
24	3824	364.24	250	-	-	-	-	-	-	-	165	165	125	100
30	3830	540.60	250	-	-	-	-	-	-	-	-	165	125	-
36	3836	695.90	250	-	-	-	-	-	-	-	-	125	125	-
42	3842	1,219.48	250	-	-	-	-	-	-	-	-	-	-	-
48	3848	1,449.76	250	-	-	-	-	-	-	-	-	-	-	-

Weights units are pounds and are approximate values.

Special Notes For Use On HDPE Pipe

For use on 4 inch through 12 inch HDPE only. The use of a pipe wall stiffening insert is required for use on HDPE pipe. The stiffeners must be sized to encompass the entire bearing length of the restraint devices. Pipe systems must be engineered to prevent movement causing fitting to slide or rotate.

EBAA products for HDPE are designed for underground pressurized fluid service and are pressure rated to match the pipe SDR pressure rating, de-rated as appropriate for service temperature. Maximum test pressure limited to pipe rated pressure.

Copyright 2016 © EBAA Iron, Inc.

Series 3800 Submittal Reference Drawing 4 in. - 12 in.

EBAA IRON

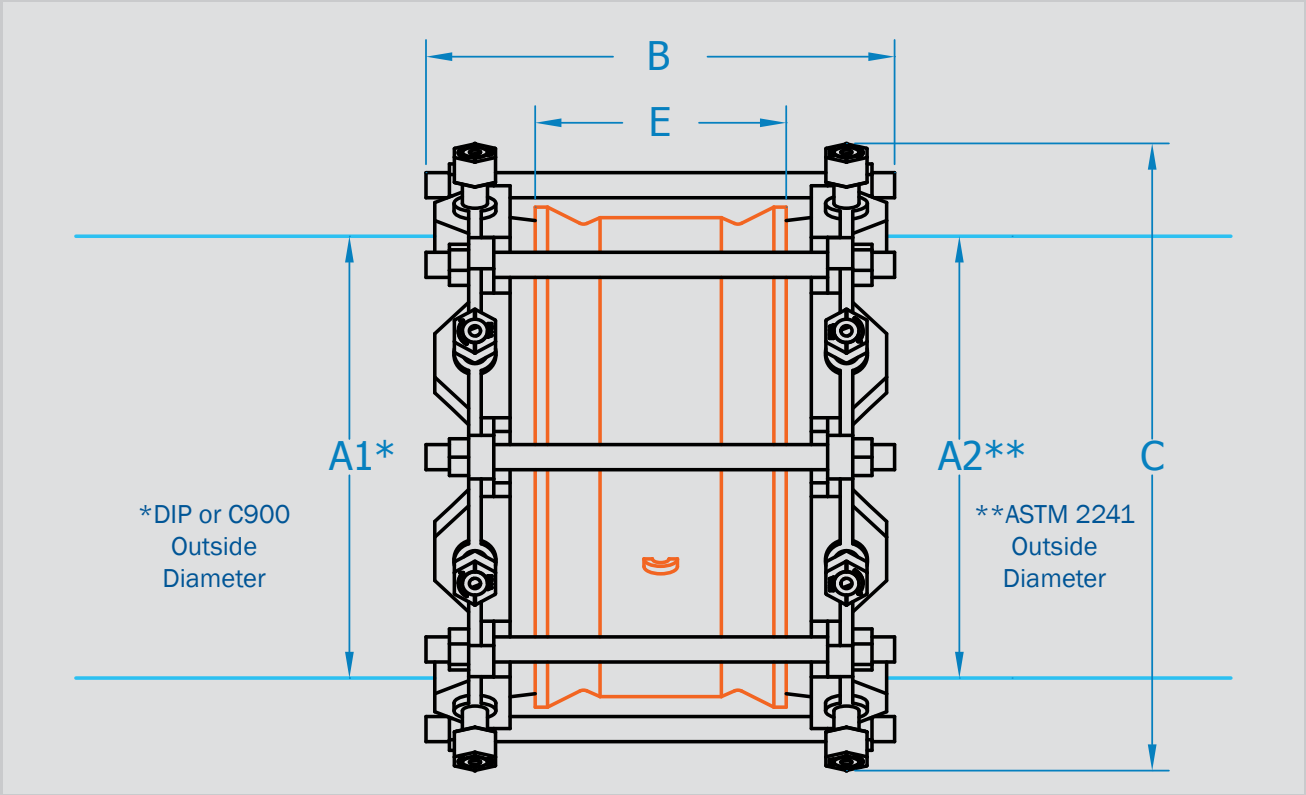

MADE IN USA

Nominal Pipe Size	Series Number	A1* Pipe O.D. (Maximum)	A2** Pipe O.D. (Minimum)	B Overall Length	C† Max. Restraint O.D. (Casing Clearance)	D Thrust Bolt (Number-Size)	E Barrel Length	Maximum Deflection
4	3804	4.80	4.50	14.0	9.5	4 - ¾ x 14	7.5	4°
6	3806	6.90	6.63	14.0	12.1	6 - ¾ x 14	7.5	4°
8	3808	9.05	8.63	14.0	13.6	6 - ¾ x 14	7.5	4°
10	3810	11.10	10.75	14.0	16.0	8 - ¾ x 14	7.5	4°
12	3812	13.20	12.75	14.0	18.1	8 - ¾ x 14	7.5	4°

** Requires the use of a Transition Gasket. † As installed with Twist-Off nuts off.
Note: Dimensions are in inches (± 1%) and are subject to change without notice.

Sample Specification

Joint restraint to prevent axial separation shall be incorporated into the design of the sleeve or coupling used to connect two plain ends of same or dissimilar materials, such as Ductile Iron pipe, steel pipe, PVC pipe (C900 or ASTM D2241) and or High Density Polyethylene (HDPE) pipe. Internal pipe wall stiffeners must be used when restraining HDPE.

The restraint mechanism shall incorporate a plurality of individually actuating gripping surfaces to maximize restraint capability, and have torque limiting twist off nuts to insure proper actuating of the restraint devices. The restraint devices shall be coated using MEGA-BOND®. For complete specifications on MEGA-BOND visit www.ebaa.com.

The coupling sleeve internal surfaces (wetted parts) shall be lined with a minimum of 15 mils of fusion bonded epoxy conforming to the applicable requirements of ANSI/AWWA C213. Sealing gaskets shall be constructed of SBR. The coating shall meet ANSI/NSF-61. Exterior surfaces shall be coated with a minimum of 6 mils of fusion bonded epoxy conforming to the applicable requirements of ANSI/AWWA C116/A21.16. Ductile Iron components shall meet or exceed the requirements of ASTM A536, and shall be tested in accordance with said standard.

The restrained joining system shall meet the applicable requirements of AWWA C219, ANSI/AWWA C111/A21.11, and ASTM D2000.

The restrained coupling system shall be Series 3800 manufactured by EBAA Iron, Inc.

Series 3800 Submittal Reference Drawing 14 in. - 48 in.

EBAA IRON

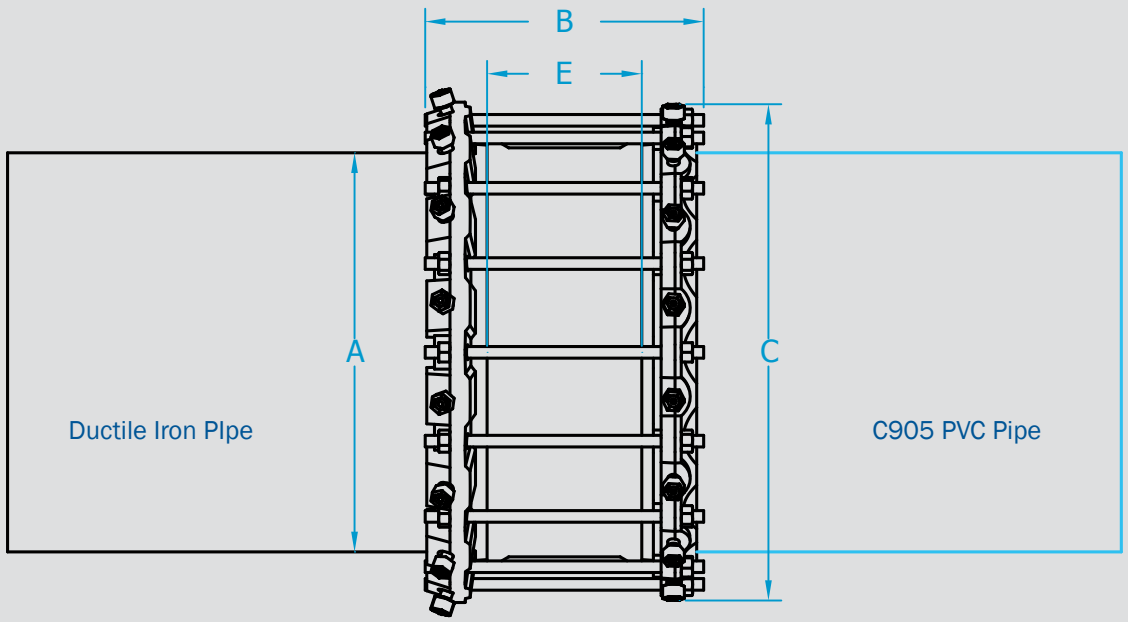

MADE IN USA

Nominal Pipe Size	Series Number*	A Pipe O.D.	B Overall Length	C** Max. Restraint O.D. (Casing Clearance)	Thrust Bolt (Number-Size)	E Barrel Length	Maximum Deflection
14	3814XX	15.3	18.0	20.94	10 - ¾ x 18	10.0	4°
16	3816XX	17.4	18.0	23.00	12 - ¾ x 18	10.0	4°
18	3818XX	19.5	18.0	25.10	12 - ¾ x 18	10.0	4°
20	3820XX	21.6	18.0	27.20	14 - ¾ x 18	10.0	4°
24	3824XX	25.8	18.0	32.64	16 - ¾ x 18	10.0	4°
30	3830XX	32.0	20.0	38.87	20 - 1 x 20	10.0	3°
36	3836XX	38.3	20.0	45.17	24 - 1 x 20	10.0	3°
42	3842XX	44.5	24.0	55.57	28 - 1¼ x 24	10.0	1°
48	3848XX	50.8	24.0	61.87	32 -1¼ x 24	10.0	1°

** As installed with Twist-Off nuts off.
Note: Dimensions are in inches (± 1%) and are subject to change without notice.

*Specifying the Proper Series Number

4 inch through 12 inch

For Nominal Pipe Sizes 4 inch through 12 inch the Series 3800 MEGA-COUPLING utilizes a common restraint ring for Ductile Iron Pipe (DIP), C900 PVC Pipe, ASTM D2241 PVC Pipe (IPS), Carbon Steel Pipe, and HDPE Pipe (with internal pipe wall stiffener for HDPE). The only item that needs to be specified during the order process for 4 inch through 12 inch is what type of gasket is required for joint assembly for the various pipe O.D.'s:

- 3800S for coupling either DIP, C900 PVC and or DIP O.D. HDPE Pipe
- 3800T for coupling either Carbon Steel and or ASTM D2241 PVC
- 3800ST for coupling either DIP, C900 PVC or DIP O.D. HDPE Pipe on one side and either Carbon Steel or ASTM D2241 PVC on the other side

14 inch through 48 inch

For Nominal Pipe sizes 14 inch and above the Series 3800 MEGA-COUPLING utilizes the Series 1100 MEGALUG® restraint on DIP and the Series 2000PV MEGALUG restraint on C905 PVC. Since the O.D. of both DIP and C905 PVC is the same, the EBAA-SEAL™ Improved Mechanical Joint Gasket is provided.

- 3800DI for coupling DIP
- 3800PV for coupling C905 PVC
- 3800DIPV for coupling one side DIP and other C905 PVC

Spacer Instructions (4 in. through 12 in. only)

Ductile Iron or C900 PVC O.D. Sized Pipe

For installation on **Ductile Iron** or **C900 PVC sized pipe**, use as received and install per instructions.

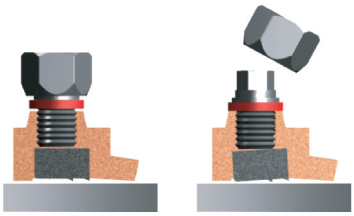

Steel or ASTM D2241 O.D. Sized Pipe (IPS O.D.)

For installation on **Steel** or **ASTM D2241 O.D. Sized pipe**, remove spacers and replace screws. Install per instructions.

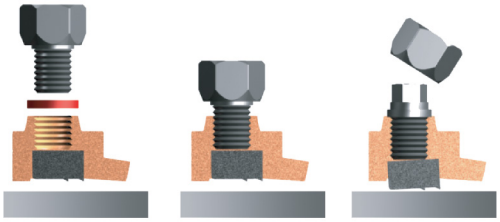

Installation Instructions

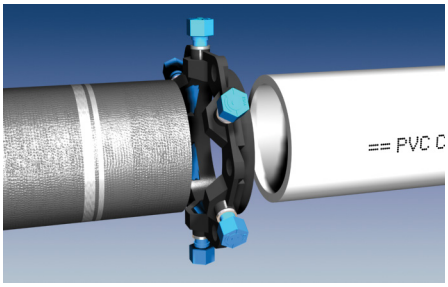

1. Identify the pipe. The spacers under the actuating screws must be removed for use on ASTM D2241 O.D. sized pipe (4 inch through 12 in. only). The spacers must remain in place for use on Ductile Iron or C900 PVC O.D. sized pipe. (See spacer instructions above)

   Clean and inspect the pipe ends. Beveling of the ends is not necessary.

   If used on HDPE Pipe, a pipe wall stiffener insert that encompass the entire bearing length of the restraint devices must be installed prior to step two.

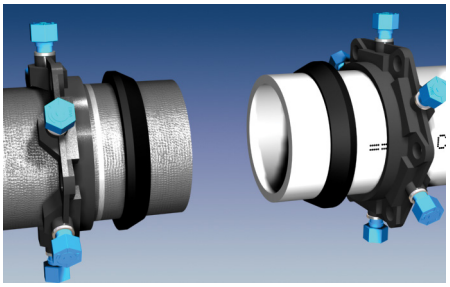

2. Place the end rings on the pipes with the lip extensions toward the pipe ends. For 4 inch through 12 the restraints will be the Series 2000HPV, for 14 inch and above Ductile Iron pipe the restraint ring will be the Series 1100 MEGALUG® and for C905 PVC 14 inch and above the restraint ringwill be the Series 2000PV MEGALUG. Lubricate and install the Standard Mechanical Joint Gasket.

   (Standard Mechanical Joint Gaskets must be used with Ductile Iron Pipe and C900 PVC pipe 4 inch through 12 inch while the EBAA-SEAL™ Improved Mechanical Joint gasket is used on 14 inch and above. Transition gaskets must be used with Steel or ASTM D2241 pipe).

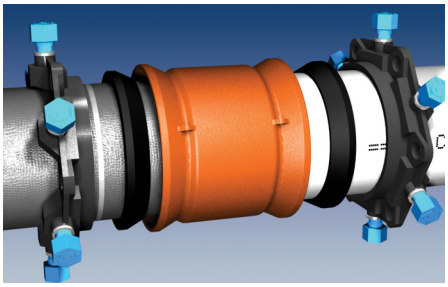

3. Center the sleeve body over the ends of the pipes while maintaining a 1/2” to 1” gap between the pipe ends. Slide the gaskets and end rings toward the sleeve body.

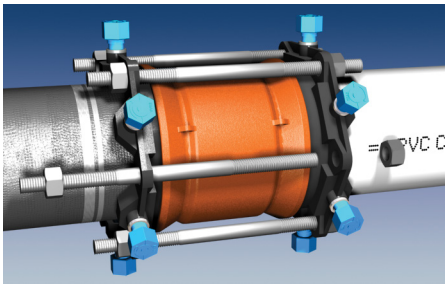

4. Install the threaded rods and hand tighten the nuts on each end. Gradually tighten the nuts in an alternating manner until the proper torque value has been reached, while maintaining the same distance between the rings and the ends of the body at all points around the rings. For 4 inch through 24 inch torque to 75-90 ft.-lbs., for 30 and 48 inch torque to 120-150 ft.-lbs.

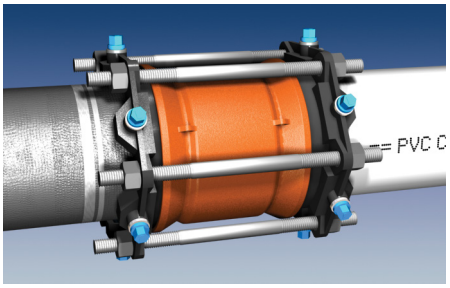

5. Hand tighten the actuating screws until all wedges are touching the pipes. Continue tightening the screws in an alternating manner until the torque limiting heads twist off. The screws may bottom out during this step.

Members of... AFS AMERICAN FOUNDRY SOCIETY

EBAA IRON Sales, Inc.
P.O. Box 857, Eastland, TX 76448
Tel: (254) 629-1731
Fax: (254) 629-8931
(800) 433-1716 within US and Canada
contact@ebaa.com
www.ebaa.com

Series 2000PV

Mechanical Joint Restraint for PVC Pipe

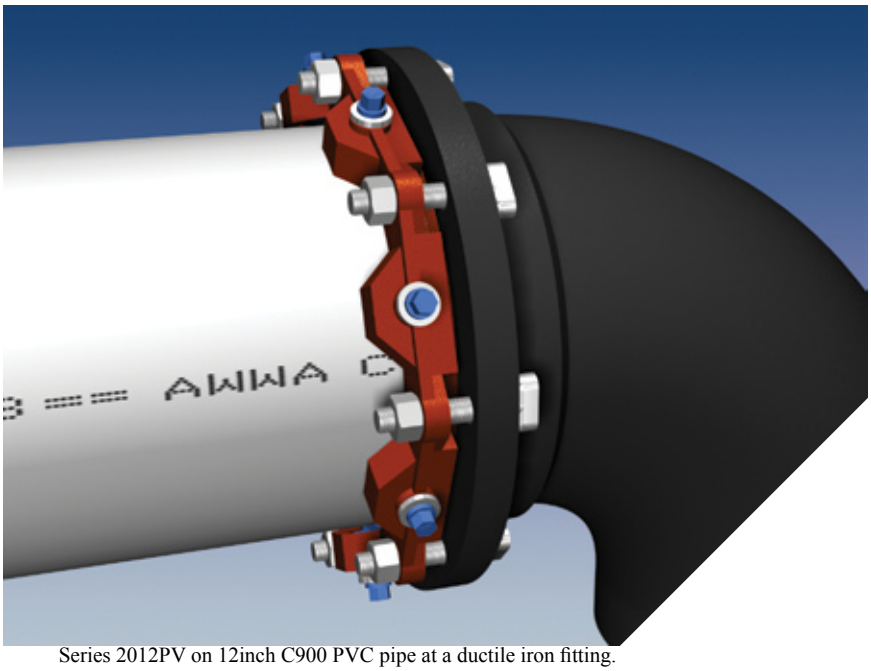

Series 2012PV on 12inch C900 PVC pipe at a ductile iron fitting.

Nominal Pipe Size	Series Number	Shipping Weight
3	2003PV	7.0
4	2004PV	8.8
6	2006PV	12.1
8	2008PV	16.3
10	2010PV	26.0
12	2012PV	31.4
14	2014PV	47.6
16	2016PV	52.8
18	2018PV	61.8
20	2020PV	70.9
24	2024PV	92.9
30	2030PV	128.5
36	2036PV	161.3
42	2242*	652.0
48	2248*	711.1

*Restraint for pipe size 42 inch and greater, please refer to Series 2200 Brochure found at www.ebaa.com.

U.S. Patent No.
4627775 4896903 5071175

Features and Applications:

- For restraining plain end PVC pipe at mechanical joint fittings and appurtenances
- Sizes 3 inch through 36 inch
  Sizes 42 inch through 48 inch accommodated by Series 2200
- MEGA-BOND® Restraint Coating System
  For more information on MEGA-BOND, refer to www.ebaa.com
- Constructed of ASTM A536 Ductile Iron
- The mechanical joint follower gland is incorporated into the restraint
- Heavy duty thick wall design
- Support Products Available:
  - Split mechanical Joint style available for 3 inch through 12 inch
    EBAA Series 2000SV
  - Solid restraint ring harness available for C905 PVC pipe bells
    EBAA Series 2800
  - Split restraint ring harness available for C900 and C905 PVC pipe bells and PVC fittings
    EBAA Series 1500, 1600 and 2500
- All 2000PV and related restraint products can be furnished as packaged accessories complete with appropriate restraint, gasket, lubrication and bolting hardware

For use on water or wastewater pipelines subject to hydrostatic pressure and tested in accordance with either AWWA C600 or ASTM D2774.

Copyright 2007 © EBAA Iron, Inc. All Rights Reserved.

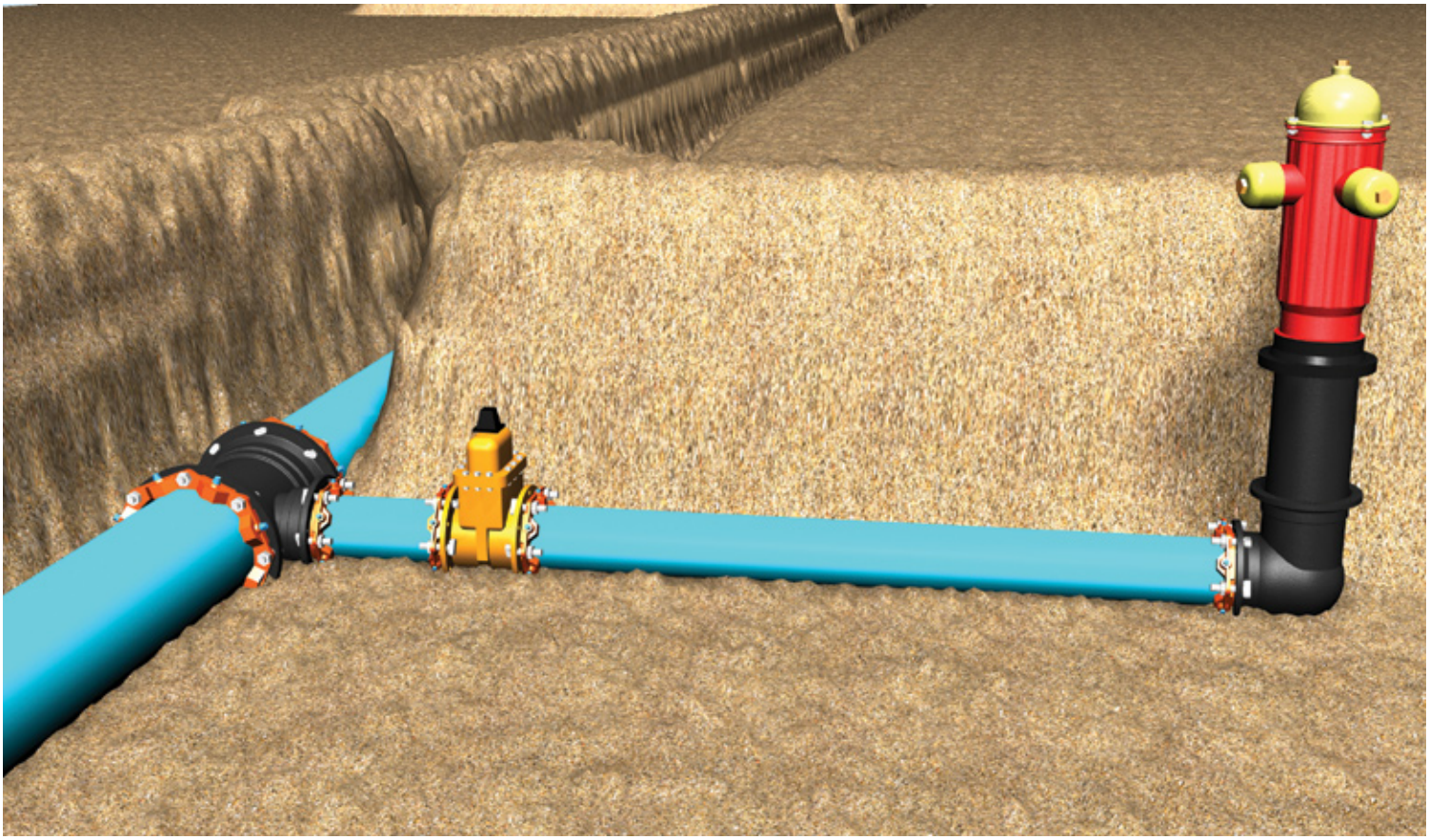

Series 2000PV:
Mechanical Joint Restraint Gland for use With AWWA C900 or IPS Outside Diameter PVC Pipe

The 2000PV MEGALUG Mechanical Joint Restraint is the fastest and most economical method of restraining PVC pipe to mechanical joints. Now the need for costly concrete thrust blocks and corrodible steel tie rods is eliminated. It can be used in straight alignment or at the preset deflection recommended for mechanical joints.

The 2000PV was the first PVC joint restraint to be tested to UNI-B-13, Underwriters Laboratories, and Factory Mutual.

Tested to and meets the requirements of ASTM F 1674-96 'Standard' Test Method for joint restraint products use with PVC pipe through 24 inch size.

UL Listed in the four through twelve inch sizes for joining UL Listed ductile iron fittings to UL Listed, Class 150 PVC pressure pipe. The maximum allowable joint deflection is five degrees.

Factory Mutual approved for use on DR18 PVC pipe in four through twelve inch sizes.

FM APPROVED

UL

ASTM F1674

AWWA MEMBER

Symbol of Excellence UniBell MEMBER UNI-BELL PVC PIPE ASSOCIATION

The 2000PV MEGALUG Concept

EBAA Iron started manufacturing joint restraint products for PVC pipe in the early 1980s. The testing of early prototypes of various configurations of restraints on large diameter PVC pipe indicated that a restraint device must be capable of consistently and reliably gripping the pipe. If not, the restraint can slip under pressure, resulting in a sudden impact, and cause the pipe to burst. Armed with this background knowledge and an appreciation for the capabilities of PVC pipe, EBAA purposefully deviated from what many in the industry once considered to be the 'only' way to grip PVC pipe. This led to development of the Series 2000PV MEGALUG Mechanical Joint Restraint for PVC pipe.

The design of the 2000PV incorporates the gripping mechanism into the design of the mechanical joint gland and utilizes a simple two part assembly process. The first step involves assembling the joint the same as any standard mechanical joint. The assembly procedure we recommend is that established in AWWA C600. The second is the actuation of the restraint.

Three Testing Methods

The design philosophy behind the 2000PV joint restraint is that the pipe with the restraint should be capable of being tested to the same minimum requirements of the pipe alone. In doing so, the restraint is shown to have no detrimental effect on the pipe and will have the same pressure rating and safety factor as the pipe on which it is used. To that end the 2000PV has been subjected to hundreds of static and cyclic pressure tests to demonstrate the performance and reliability of the restraint.

One of the primary tests of PVC is its quick burst strength. For pipe meeting the requirements of AWWA C900, AWWA C905 and ASTM 2241, the minimum quick burst requirement for the hoop stress is 6,400 PSI. For DR18, pipe pressure is 755 PSI.

The second test is sustained pressure test at a hoop stress of 4,200 PSI. For DR18 pipe, that pressure is 500 PSI.

Third, a conservative cyclic pressure surge design for the pipe exists in the form of Vinson Equation.

The 2000PV restraint has been tested to over one million cycles to the peak pressures predicted by the Vinson Equation for that number of cycles.

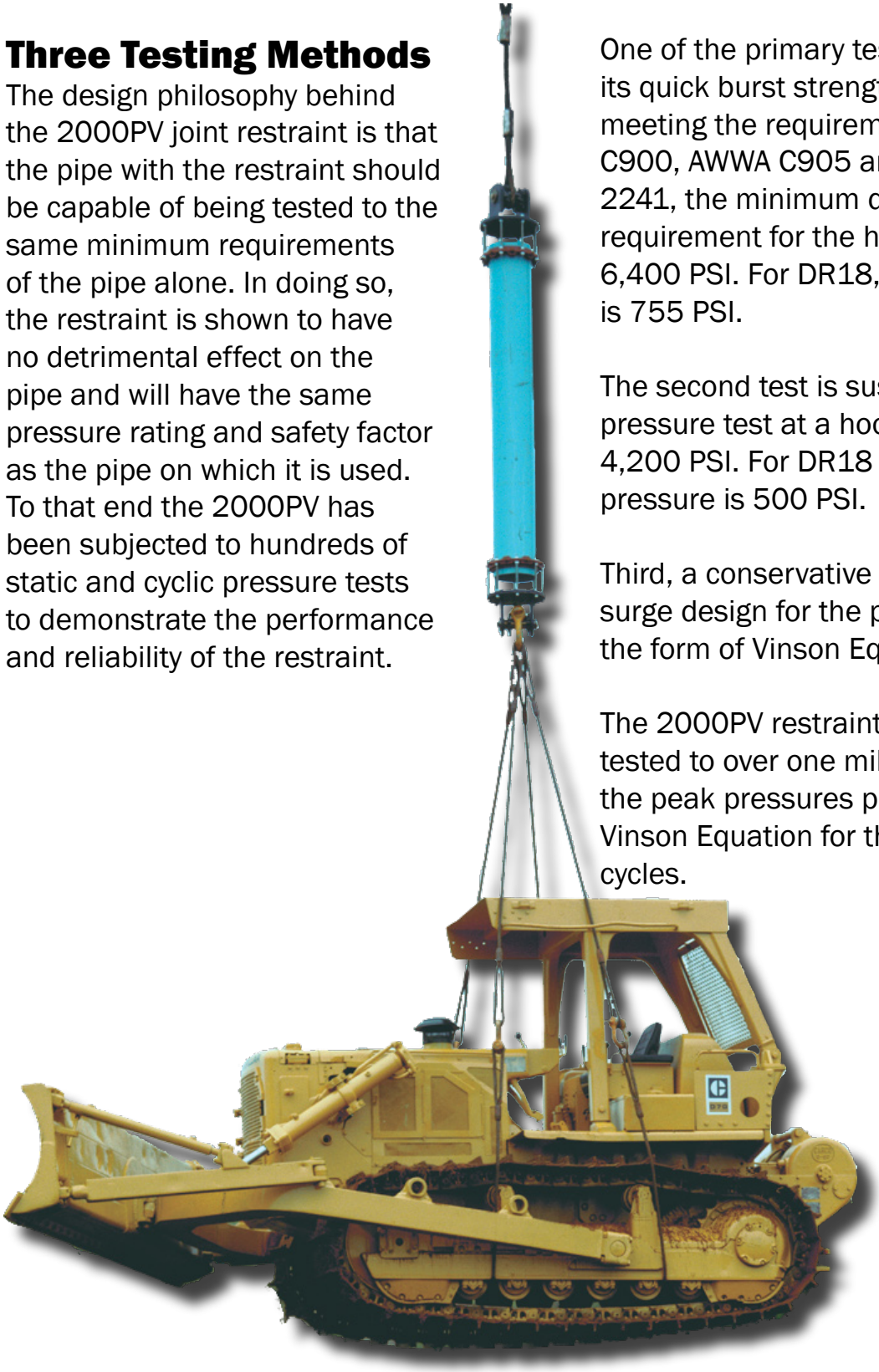

Series 2000PV Takes the Load

On April 11, 1997 EBAA Iron performed a remarkable force demonstration of their Series 2000PV joint restraint. With the use of EBAA's Series 2000PV using standard mechanical joint installation on 12 inch PVC pipe, and a 80 Ton Motor Crane, EBAA Iron lifted a D7 Caterpillar Track Type Tractor weighing in at 50,350 lbs. Along with this, the Series 2000PV has been tested to over 700 PSI. Concluding that EBAA's Series 2000PV MEGALUG can take the load.

Mechanical Joint Restraint for AWWA PVC Pipe Sample Specification

(The text of the specification below can be downloaded as a Microsoft® Word Doc from http://www.ebaa.com/downloads/Spec_2000.doc)

Restraint devices for mechanical joint fittings and appurtenances conforming to either ANSI/AWWA C111/A21.11 or ANSI/AWWA C153/A2153, shall conform to the follow:

Design

Restraint devices for nominal pipe sizes 3 inch through 36 inch shall consist of multiple gripping wedges incorporated into a follower gland meeting the applicable requirements of ANSI/AWWA C110/A21.10.

The devices shall have a working pressure rating equal to that of the pipe on which it is used. Ratings are for water pressure and must include a minimum safety factor of 2:1 in all sizes.

Material

Gland body, wedges and wedge actuating components shall be cast from grade 65-45-12 ductile iron material in accordance with ASTM A536.

Ductile iron gripping wedges shall be heat treated within a range of 370 to 470 BHN.

Three (3) test bars shall be incrementally poured per production shift as per Underwriter's Laboratory (U.L.) Specifications and ASTM A536. Testing for tensile, yield and elongation shall be done in accordance with ASTM E8.

Chemical and nodularity tests shall be performed as recommended by the Ductile Iron Society, on a per ladle basis.

Traceability

An identification number consisting of year, day, plant and shift (YYDDD) (plant designation) (Shift number), shall be cast into each gland body.

All physical and chemical test results shall be recorded such that they can be accessed via the identification number on the casting. These Material Traceability Records (MTR's) are to be made available, in hard copy, to the purchaser that requests such documentation and submits his gland body identification number.

Production pieces that are too small to accommodate individual numbering, such as fasteners and wedges, shall be controlled in segregate inventory until such time as all quality control tests are passed. These component parts may then be released to a general inventory for final assembly and packaging.

All components shall be manufactured and assembled in the United States. The purchaser shall, with reasonable notice, have the right to plant visitation at his/her expense.

Installation

Mechanical joint restraint shall require conventional tools and installation procedures per AWWA C600, while retaining full mechanical joint deflection during assembly.

Proper actuation of the gripping wedges shall be ensured with torque limiting twist off nuts.

Approvals

Mechanical Joint Restraints shall be Listed by Underwriters Laboratories in the 4 inch through 12 inch sizes.

Mechanical Joint Restraints shall be Factory Mutual Approved in the 4 inch through 12 inch sizes.

Mechanical Joint Restraints, 4 inch through 24 inch, shall meet or exceed the requirements of ASTM F1674 of the latest revision.

Mechanical joint restraint shall be Series 2000PV produced by EBAA Iron Inc. or approved equal.

MEGA-BOND® Restraint Coating System

All wedge assemblies and related parts shall be processed through a phosphate wash, rinse and drying operation prior to coating application. The coating shall consist of a minimum of two coats of liquid Xylan® fluoropolymer coating with heat cure to follow each coat.

All casting bodies shall be surface pretreated with a phosphate wash, rinse and sealer before drying. The coating shall be electrostatically applied and heat cured. The coating shall be a polyester based powder to provide corrosion, impact and UV resistance.

The coating system shall be MEGA-BOND by EBAA Iron, Inc. or approved equal. Requests for approved equal must submit coating material and process details for review prior to bid.

Xylan is a registered trademark of the Whitford Corporation.

For more information regarding MEGA-BOND, refer to the MEGA-BOND brochure or visit www.ebaa.com.

Support Products

for more information concerning these products, please consult the catalog or www.ebaa.com

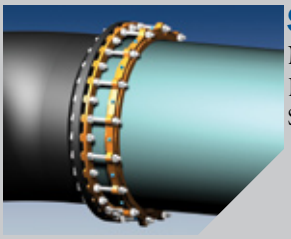

Series 2200

MEGALUG® Restraint for C905 PVC Pipe at Mechanical Joint Fittings

Sizes 42 and 48 inch

Series 2500

MEGALUG® Restraint for C900 and C905 PVC Pipe at PVC Fittings

Sizes 4 inch through 48

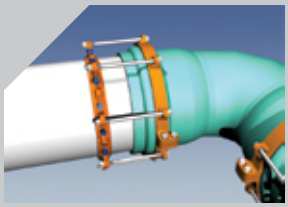

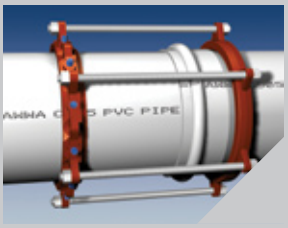

Series 2800

MEGALUG® Restraint Harness for C905 PVC Pipe

Sizes 14 inch through 48

Sizes 4 through 12 accommodated by either Series 1500 or 1600

Series 2000SV

Split MEGALUG® Restraint for existing C900 PVC Pipe at Ductile Iron Fittings

Sizes 4 inch through 12

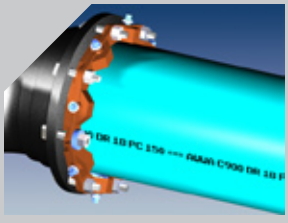

Series 2000PV Submittal Reference Drawing

EBAA IRON

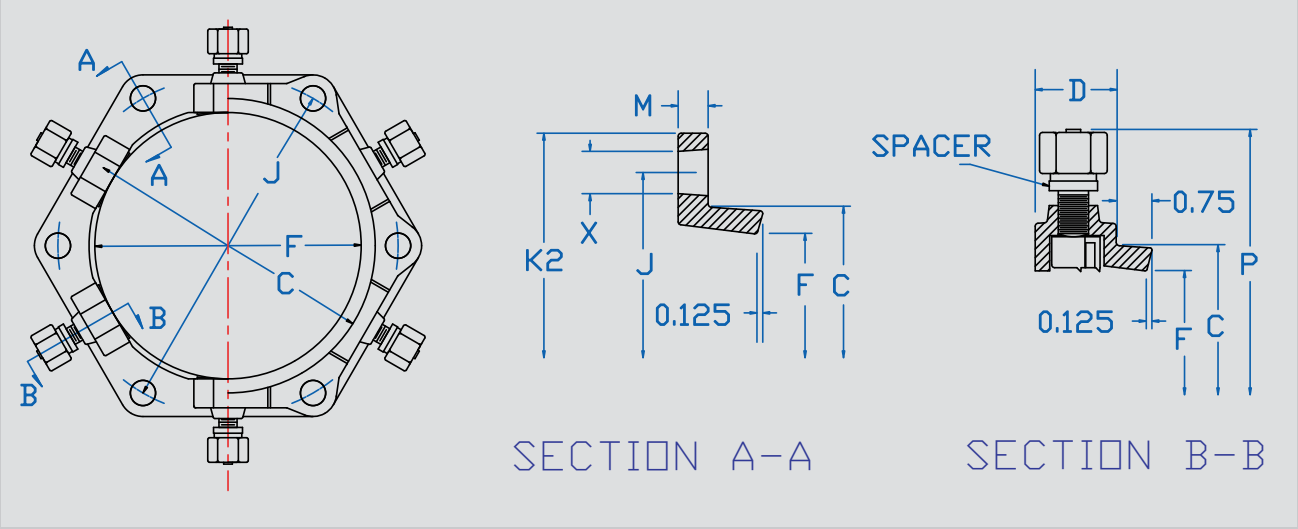

MADE IN USA

Nominal Pipe Size	Series Number	C	D	F	M	P	P*	X	J	K2	Wedge Qty	Bolt Qty	Weight (lbs.)
3	2003PV	4.84	1.55	3.60	0.50	9.8	8.6	¾	6.19	7.69	4	4	7.0
4	2004PV	5.92	1.68	4.90	0.50	10.5	9.5	⅞	7.50	9.13	4	4	8.8
6	2006PV	8.02	1.68	7.00	0.50	13.0	12.1	⅞	9.50	11.13	6	6	12.1
8	2008PV	10.17	1.68	9.15	0.62	14.5	13.6	⅞	11.75	13.38	6	6	16.3
10	2010PV	12.22	2.10	11.20	0.62	17.0	16.0	⅞	14.00	15.63	8	8	26.0
12	2012PV	14.32	2.10	13.30	0.75	19.0	18.1	⅞	16.25	17.88	8	8	31.4
14	2014PV	16.40	2.25	15.49	0.88	21.7	20.9	⅞	18.75	20.38	10	10	47.6
16	2016PV	18.50	2.25	17.58	0.88	23.8	23.0	⅞	21.00	22.63	12	12	52.8
18	2018PV	20.60	2.25	19.68	1.13	25.9	25.1	⅞	23.25	24.88	12	12	61.8
20	2020PV	22.70	2.25	21.79	1.25	28.0	27.2	⅞	25.50	27.13	14	14	70.9
24	2024PV	26.90	2.75	25.99	1.42	32.3	31.5	⅞	30.00	31.63	16	16	92.9
30	2030PV	33.29	2.70	32.22	1.50	38.5	37.7	1⅛	36.88	39.12	20	20	128.5
36	2036PV	39.59	2.70	38.52	1.50	44.8	44.0	1⅛	43.75	46.00	24	24	161.3
42	2242	Submittal information for pipe sizes 42 inch and greater can be found in the Series 2200 Brochure.											
48	2248	Submittal information for pipe sizes 42 inch and greater can be found in the Series 2200 Brochure.											

NOTE: Dimensions are in inches and are subject to change without notice.

Nominal Pipe Size	Series Number	Ratings for Ordinary Water Works w/Transient surges only						Ratings for Peak Pressures used in Sewage Force Mains and other installations designed for Cyclic Surges of 1-Mill. Cycles						C905 PVC Pipe		
		DR14	DR18	DR25	SDR17	SDR21	SDR26	DR14	DR18	DR25	SDR17	SDR21	SDR26	DR18	DR25	DR32.5
3	2003PV	200	150	100	250	200	160	200	150	100	200	160	120	-	-	-
4	2004PV	200	150	100	250	200	160	200	150	100	200	160	120	-	-	-
6	2006PV	200	150	100	250	200	160	200	150	100	200	160	120	-	-	-
8	2008PV	200	150	100	250	200	160	200	150	100	200	160	120	-	-	-
10	2010PV	200	150	100	250	200	160	200	150	100	200	160	120	-	-	-
12	2012PV	200	150	100	250	200	160	200	150	100	200	160	120	-	-	-
14	2014PV	-	-	-	-	-	-	-	-	-	-	-	-	235	165	125
16	2016PV	-	-	-	-	-	-	-	-	-	-	-	-	235	165	125
18	2018PV	-	-	-	-	-	-	-	-	-	-	-	-	200	165	-
20	2020PV	-	-	-	-	-	-	-	-	-	-	-	-	200	165	-
24	2024PV	-	-	-	-	-	-	-	-	-	-	-	-	165	165	125
30	2030PV	-	-	-	-	-	-	-	-	-	-	-	-	-	165	125
36	2036PV	-	-	-	-	-	-	-	-	-	-	-	-	-	125	125

NOTE: For applications or pressures other than those shown, please contact EBAA for assistance.

Spacer Instructions

Ductile Iron or C900 PVC Pipe Sizes

For installation on **C900 PVC** pipe, use as received and install per instructions.

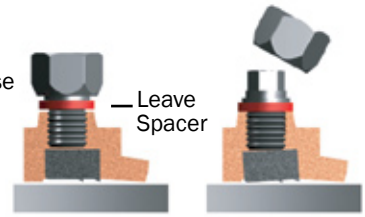

ASTM 2241 PVC Pipe Sizes (IPS O.D.)

For installation on **ASTM 2241** sized pipe, remove spacers and replace screws. Install per instructions.

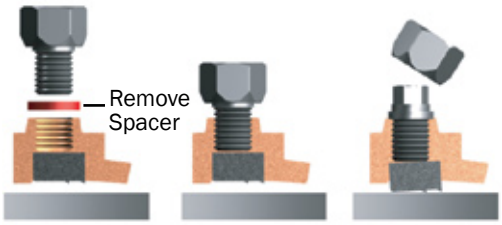

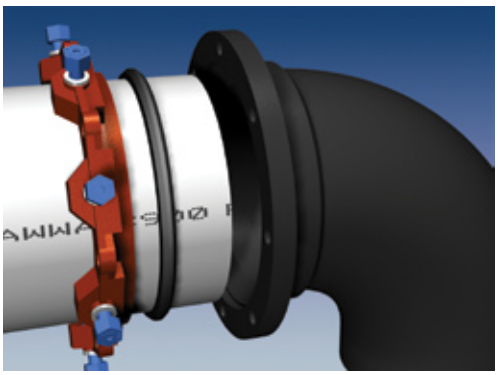

1. Identify the pipe. The 2000PV is for use with PVC and HDPE pipe. The 4 inch through 12 inch size may be used on C900, IPS, and C909 PVC pipe as well as C906 HDPE pipe. Check to see if the spacers under the screws are in place. If the pipe is C900 or is ductile iron O.D., proceed with spacers in place. If the pipe is IPS O.D., remove the spacers. Since 3 inch and 14 inch through 24 inch restraints are only used with one pipe diameter, no spacers are used.

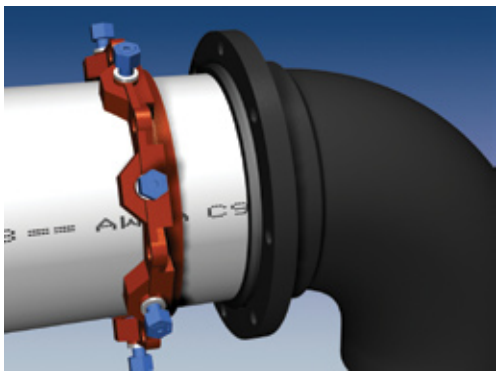

2. * Clean the socket and the plain end. Lubrication and additional cleaning should be provided by brushing both the gasket and plain end with soapy water or an approved pipe lubricate meeting the requirements of ANSI/AWWA C111/A12.11 just prior to slipping the gasket onto the plain end for joint assembly. Place the gland on the plain end with the lip extension toward the plain end; follow by the gasket with the narrow edge of the gasket toward the plain end [The gasket provided may have been the EBAA-Seal™ Improved Mechanical Joint Gasket. This gasket is bi-directional and has no front or back. The use of a pipe wall stiffening insert is required on High Density Polyethylene pipe.].

NOTE: In cold weather it is preferable to warm the gasket to facilitate assembly of the joint.

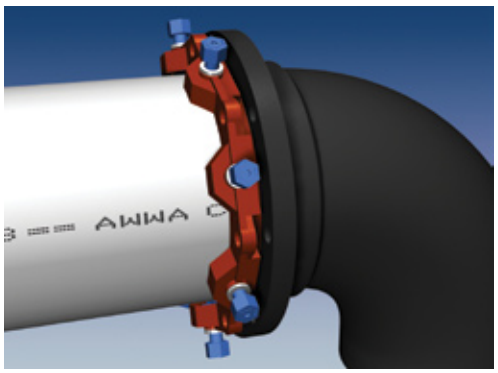

3. * Insert the pipe into the socket and press the gasket firmly and evenly into the gasket recess. Keep the joint straight during assembly.

4. * Push the gland toward the socket and center it around the pipe with the gland lip against the gasket. Insert bolts and hand-tighten nuts. Make deflection after joint assembly but before tightening bolts.

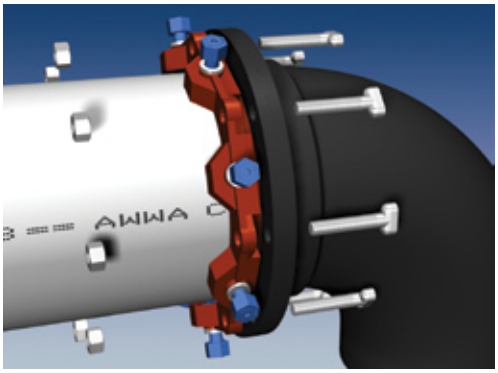

5. * Tighten the bolts to the normal range of bolt torque [45-60 ft-lbs for 3 inch, 75-90 ft-lbs for 4 inch through 24 inch, 100-120 ft-lbs for 30 inch and 36 inch, and 120-150 ft-lbs for 42 inch and 48 inch.] while at all times maintaining approximately the same distance between the gland and the face of the flange at all points around the socket. This can be accomplished by partially tightening the bottom bolt first, then the top bolt, next the bolts at either side, finally the remaining bolts. Repeat the process until all bolts are within the appropriate range of torque. In large sizes (30-48 inch), five or more repetitions may be required. The use of a torque-indicating wrench will facilitate the procedure.

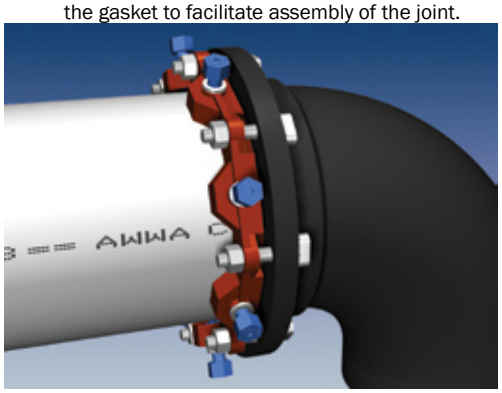

6. Tighten the torque limiting twist-off nuts in a clockwise direction (direction indicated by arrow on top of nut) until all wedges are in firm contact with the pipe surface. Continue tightening in an alternating manner until all of the nuts have been twisted off.

***These steps are requirements of AWWA C600.**

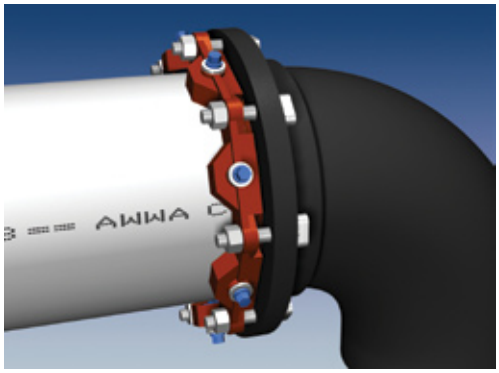

7. If removal is necessary, utilize the ⅝ inch hex heads provided. If reassembly is required, assemble the joint in the same manner as above; tighten the screws to 60 to 80 ft-lbs. If the Series 2000PV restraint is removed from the pipe, be sure that all of the screws, spacers (if required), and wedges are in place before the restraint is reassembled.

EBAA IRON Sales, Inc.
P.O. Box 857, Eastland, TX 76448
Tel: (254) 629-1731
Fax: (254) 629-8931
(800) 433-1716 within US and Canada
contact@ebaa.com
www.ebaa.com

Members of... AFS AMERICAN FOUNDRY SOCIETY

Series 1500

Bell Restraint Harness for C900 PVC Pipe

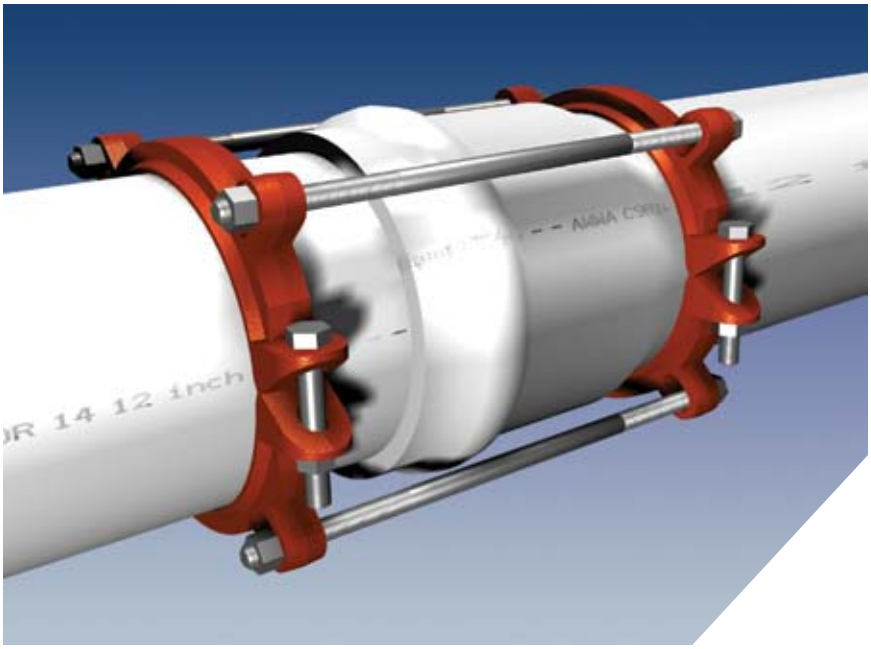

Series 1512 on 12 inch PVC Pipe.

Features and Applications:

- For use on AWWA C900 PVC pipe bells
- Minimum 2 to 1 Safety Factor
- MEGA-BOND®
  Restraint Coating System
  For more information regarding MEGA-BOND refer to www.ebaa.com
- Split design for ease of installation
- Constructed of ASTM A536 ductile iron
- Available in accessory packages
- For use on water or wastewater pipelines subject to hydrostatic pressure and tested in accordance with either AWWA C600 or ASTM D2774

			Pressure Ratings (C900)		
Nominal Pipe Size	Series Number	Approximate Shipping Weight	DR 14 Class 200	DR 18 Class 150	DR 25 Class 100
4	1504	15.0	200	150	100
6	1506	22.0	200	150	100
8	1508	28.0	200	150	100
10	1510	51.8	200	150	100
12	1512	56.2	200	150	100

NOTE: For applications or pressures other than those shown, please contact EBAA for assistance.

Packaged Items.

Sample Specification

Restraint for PVC pipe bell (AWWA C900) shall consist of the following: The restraint shall be manufactured of ductile iron conforming to ASTM A536. The restraint devices shall be coated with MEGA-BOND. (For complete specifications on MEGA-BOND visit www.ebaa.com.) A split serrated ring shall be used behind the pipe bell. A split serrated ring shall also be used to grip the pipe, and a sufficient number of bolts shall be used to connect the bell ring and the gripping ring. The combination shall have a pressure rating as shown in the adjacent table. The restraint shall be the Series 1500, as manufactured by EBAA Iron, Inc., or approved equal.

Copyright 2007 © EBAA Iron, Inc. All Rights Reserved.

Series 1500 Submittal Reference Drawing

EBAA IRON

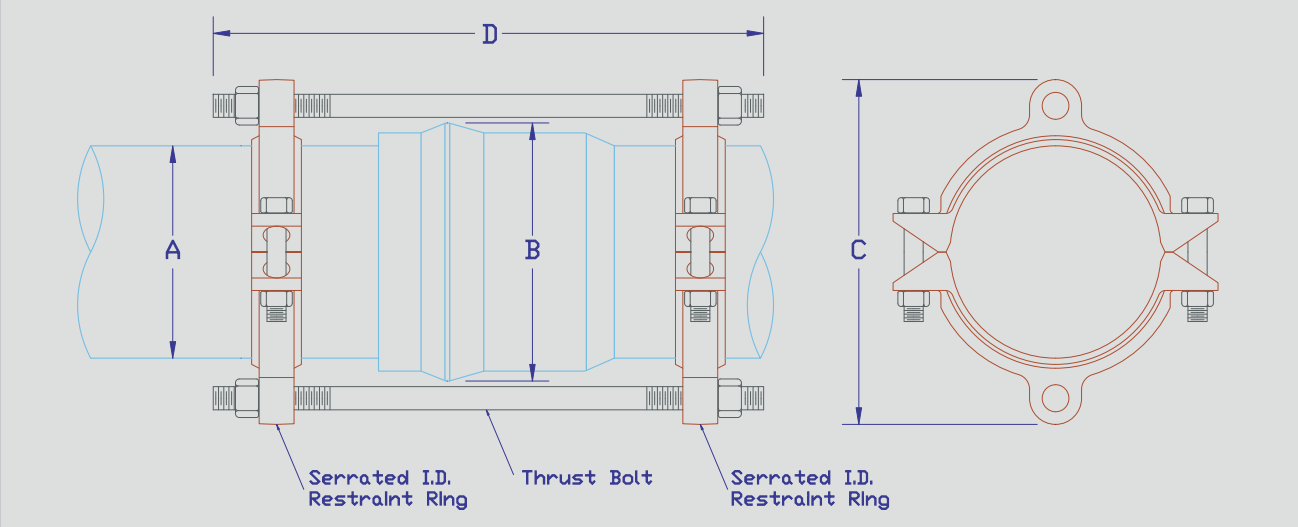

MADE IN USA

Nominal Pipe Size	Series Number	A Pipe O.D.	B Maximum Bell O.D. Cleared	C Max. Restraint O.D. (Casing Clearance)	D Overall Length	Thrust Bolt (Number-Size)
4	1504	4.80	6.75	9.25	13	2 - ¾ x 13
6	1506	6.90	8.75	11.25	18	2 - ¾ x 18
8	1508	9.05	12.25	14.75	18	2 - ¾ x 18
10	1510	11.10	14.20	16.85	22	4 - ¾ x 22
12	1512	13.20	16.90	19.45	22	4 - ¾ x 22

Installation Instructions

NOTE: Dimensions are in inches and are subject to change without notice.

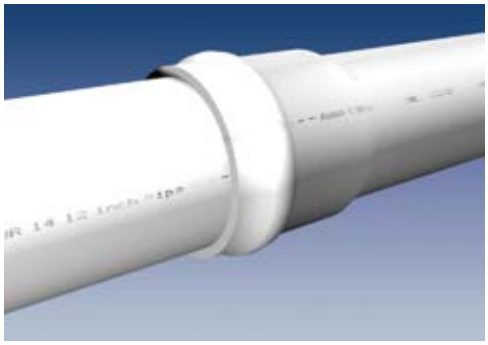

1. The Series 1500 is designed for restraining push-on PVC pipe bells. It has a split, serrated restraint ring on the spigot and a split serrated ring behind the bell.
2. Assemble the push-on joint per the pipe manufacturer's instructions.

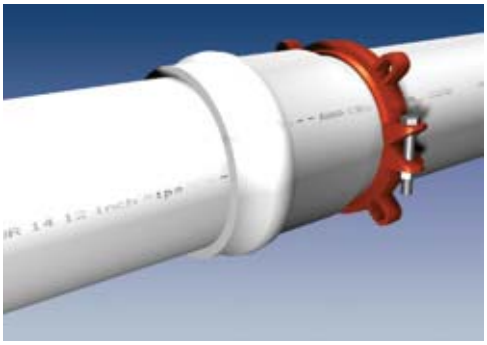

3. Install both halves of the serrated ring around the pipe behind the bell, tapping each half into place. Make sure that the complete ID of the ring is touching the pipe before installing the side bolts. Install the side bolts and tighten evenly to 110 ft-lbs. of torque. (60 ft-lbs on 4 inch and 6 inch)

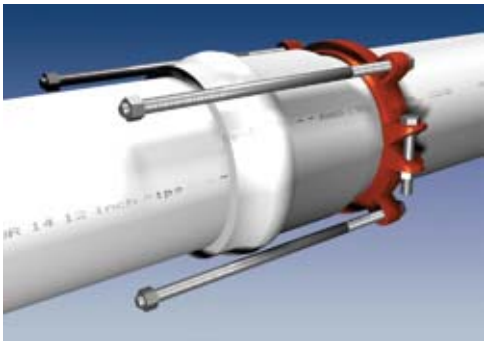

4. Remove the side bolts from the second serrated restraint ring. Use the Thrust Bolts to determine the proper location of the restraint ring on the spigot. Allow enough room on the thrust bolt to fully engage the nuts.

5. Install both halves of the restraint ring at the proper location, tapping each half into place. Make sure that the complete ID of the ring is touching the pipe before installing the side bolts. Tighten the side bolts evenly to 110 ft-lbs. (60 ft-lbs on 4" and 6")

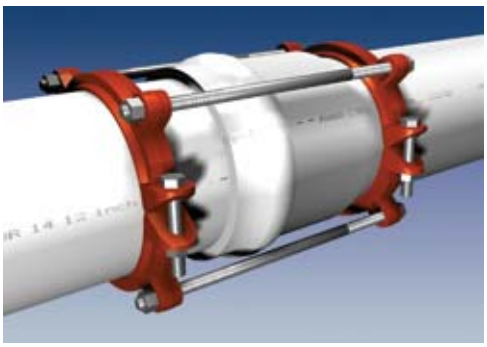

6. Place nuts on the thrust bolts and tighten until they are snug. Allow enough room on the thrust bolts to fully engage the nuts. Do not tighten these bolts enough to force the spigot further into the bell of the joint.

Members of... AFS AMERICAN FOUNDRY SOCIETY

EBAA IRON Sales, Inc.
P.O. Box 857, Eastland, TX 76448
Tel: (254) 629-1731
Fax: (254) 629-8931
(800) 433-1716 within US and Canada
contact@ebaa.com
www.ebaa.com

Series 2500

Restraint for C900 PVC Pipe at PVC Fittings

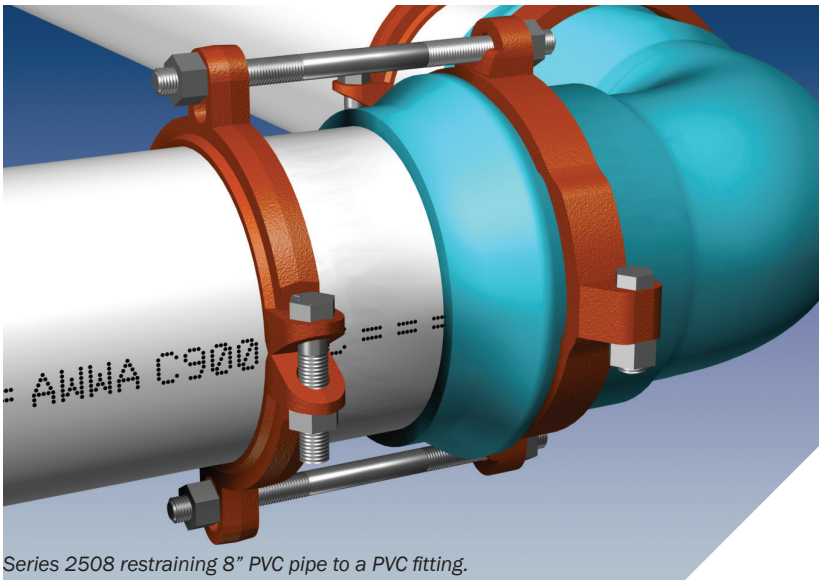

Series 2508 restraining 8" PVC pipe to a PVC fitting.

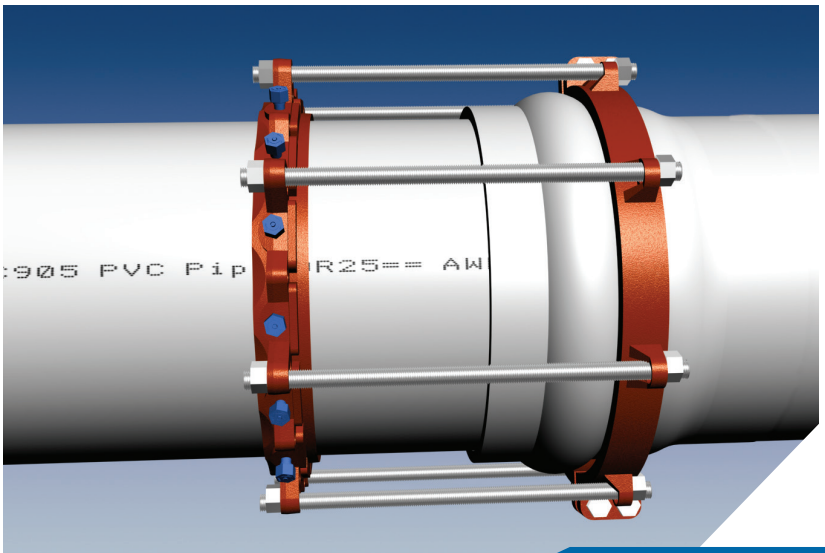

Series 2524 restraining 24" PVC pipe at a PVC Fittings.

Features and Applications:

- For use on AWWA C900-16 PVC pipe when restraining to molded or fabricated PVC fittings

  Sizes 4 inch through 12 inch - utilize a split, serrated restraint ring and complete harness has a 3 to 1 Safety Factor

  Sizes 14 inch through 48 inch - utilize a solid restraint ring and complete harness has a 2 to 1 Safetfy Factor.

- Split design on PVC fitting for ease of installation

- MEGA-BOND®
  Restraint Coating System
  For more information regarding MEGA-BOND refer to www.ebaa.com

- Constructed of ASTM A536 Ductile Iron

- Minimum 2 to 1 Safety Factor

For use on water or wastewater pipelines subject to hydrostatic pressure and tested in accordance with either AWWA C600 or ASTM D2774

			Pressure Rating (PSI)					
Nominal Pipe Size	Series Number	Approximate Weight (lbs.)	DR14	DR18	DR25	DR32.5	DR41	DR51
4	2504	13.9	200	150	100	-	-	-
6	2506	20.5	200	150	100	-	-	-
8	2508	27.3	200	150	100	-	-	-
10	2510	43.8	200	150	100	-	-	-
12	2512	53.3	200	150	100	-	-	-
14	2514	102.7	-	200	165	-	-	-
16	2516	119.6	-	200	165	-	-	-
18	2518	129.7	-	200	165	-	-	-
20	2520	153.5	-	-	165	-	-	-
24	2524	264.8	-	-	165	-	-	-
30	2530	364.4	-	-	125	125	-	-
36	2536	471.0	-	-	125	125	-	-
42	2542	921.4	-	-	-	125	100	80
48	2548	1,056.0	-	-	-	125	100	80

NOTE: For applications or pressures other than those shown, please contact EBAA for assistance.
Safety Factor is modified to 2.5 on DR14 Pipe/Fittings.

Copyright © 2022 All Rights Reserved

4 in. - 12 in., Series 2500 Submittal Reference Drawing

EBAA IRON

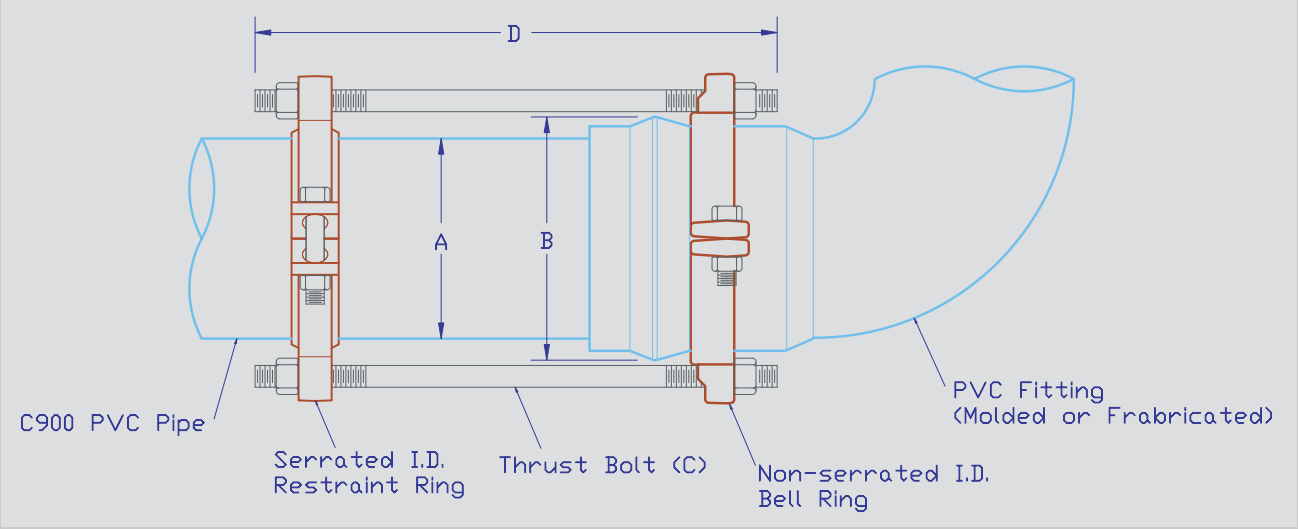

MADE IN USA

Nominal Pipe Size	Series Number	A Pipe O.D.	B Maximum Bell O.D. Cleared	C Thrust Bolt (Number - Size)	D Overall Length
4	2504	4.80	6.75	2 - ¾ x 13	13
6	2506	6.90	8.75	2 - ¾ x 18	18
8	2508	9.05	12.25	2 - ¾ x 18	18
10	2510	11.10	14.20	4 - ¾ x 18	18
12	2512	13.20	16.90	4 - ¾ x 18	18

NOTE: Dimensions are in inches (±1%) and are subject to change without notice.

Sample Specification 2500, 4 inch through 12 inch

Restraint for PVC pipe (AWWA C900-16) at PVC fittings shall consist of the following: The restraint shall be manufactured of ductile iron conforming to ASTM A536. The restraint devices shall be coated using MEGA-BOND™. (For complete specifications on MEGA-BOND visit www.ebaa.com.) Side clamp bolts shall be of SAE J429 Grade 5 material. A split ring shall be utilized on the PVC fitting bell. A serrated ring shall be used to grip the spigot end of the pipe, and a sufficient number of bolts shall be used to connect the bell ring and the gripping ring. The combination shall have a minimum working pressure rating equivalent to the pipe. The restraint shall be the Series 2500, as manufactured by EBAA Iron, Inc., or approved equal.

A Microsoft® Office Word Document version of this Sample Specification may be downloaded from www.ebaa.com.

Members of... AFS AMERICAN FOUNDRY SOCIETY

EBAA IRON Sales, Inc.
P.O. Box 857, Eastland, TX 76448
Tel: (254) 629-1731
Fax: (254) 629-8931
(800) 433-1716 within US and Canada
contact@ebaa.com
www.ebaa.com

AMERICAN IRON & STEEL 100% COMPLIANT

Leadership in Energy & Environmental Design Qualified

14 in. - 48 in., Series 2500 Submittal Reference Drawing

EBAA IRON

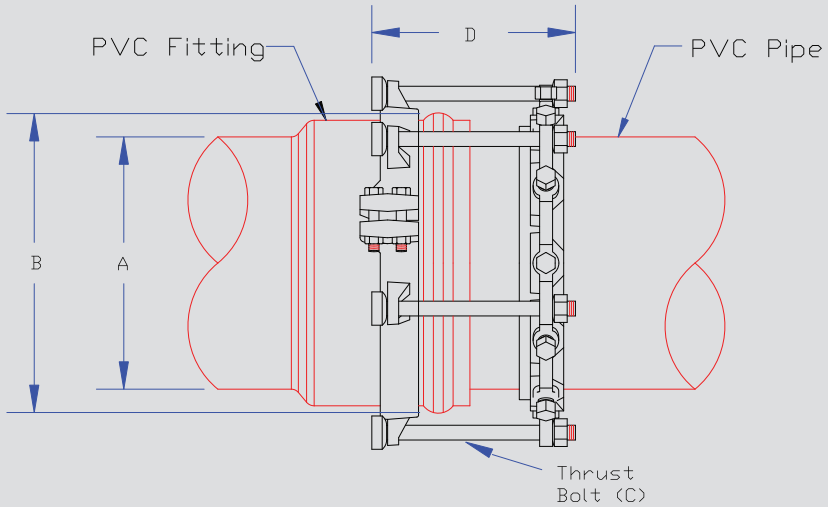

MADE IN USA

Nominal Pipe Size	Series Number	A Pipe O.D.	B Maximum Bell O.D. Cleared	C Thrust Bolt (Number - Size)	D Overall Length
14	2514	15.30	20.38	5 - 1 x 18	18
16	2516	17.40	22.75	6 - 1 x 18	18
18	2518	19.50	24.88	6 - 1 x 18	18
20	2520	21.60	27.13	7 - 1 x 18	18
24	2524	25.80	31.63	8 - 1¼ x 28	28
30	2530	32.00	39.25	10 - 1¼ x 28	28
36	2536	38.30	46.13	12 - 1¼ x 28	28
42	2542	44.50	49.00	14 - 1¼ x 36	36
48	2548	50.80	56.00	16 - 1¼ x 48	48

NOTE: Dimensions are in inches (±1%) and are subject to change without notice.

Sample Specification 2500, 14 inch through 48 inch

Restraint for PVC pipe (AWWA C900-16 & CI O.D.) at PVC fittings shall consist of the following: The restraint shall be manufactured of ductile iron conforming to ASTM A536. Side clamp bolts shall be of SAE J429 Grade 5 material. A split ring shall be utilized on the PVC fitting bell. A restraint ring, incorporating a plurality of individually-actuating gripping surfaces, shall be used to grip the pipe, and a sufficient number of bolts shall be used to connect the bell ring and the gripping ring. The combination shall have a minimum working pressure rating equivalent to the pipe. The restraint devices shall be coated using MEGABOND™. (For complete specifications on MEGABOND visit www.ebaa.com). The restraint shall be the Series 2500, as manufactured by EBAA Iron, Inc., or approved equal.

A Microsoft® Office Word Document version of this Sample Specification may be downloaded from www.ebaa.com.

Members of... AFS AMERICAN FOUNDRY SOCIETY

AMERICAN IRON & STEEL 100% COMPLIANT

EBAA IRON Sales, Inc.
P.O. Box 857, Eastland, TX 76448
Tel: (254) 629-1731
Fax: (254) 629-8931
(800) 433-1716 within US and Canada
contact@ebaa.com
www.ebaa.com

Leadership in Energy & Environmental Design Qualified

Installation Instructions for Series 2500, 4 inch through 12 inch

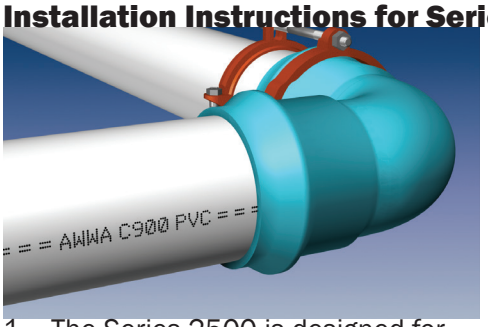

1. The Series 2500 is designed for restraining AWWA C900 PVC pipe to molded or fabricated fittings. It has a split, serrated restraint ring on the spigot and a split non-serrated ring on the fitting.

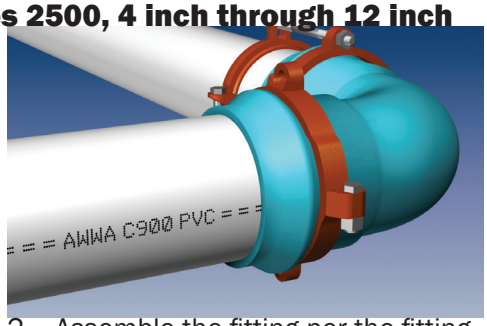

2. Assemble the fitting per the fitting manufacturer's instructions.

3. Install both halves of the split non-serrated bell ring on the fitting behind the gasket hump. Install the side bolts and tighten each to 110 ft.-lbs. (60 ft.-lbs. on 4" and 6".)

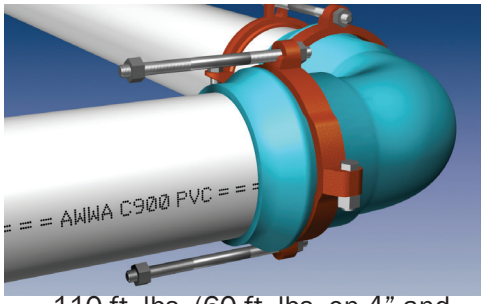

4. Slide the bell ring toward the gasket hump so that it fits snugly behind the gasket hump.

5. Remove the side bolts from the serrated restraint ring. Use the tie bolts to determine the proper location of the restraint ring on spigot. Allow enough room on tie bolt to fully engage the nuts.

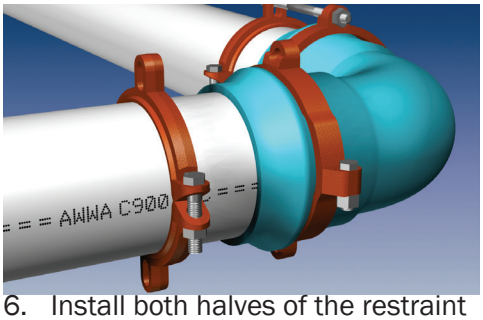

6. Install both halves of the restraint ring at the proper location, tapping each half into place. Make sure that the complete ID of the ring is touching the pipe before installing the side bolts. Tighten the side bolts evenly to 110 ft.-lbs. (60 ft.-lbs. on 4" and 6".)

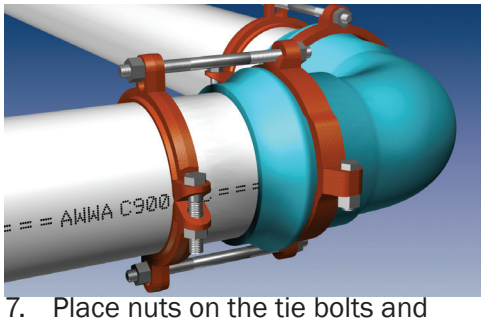

7. Place nuts on the tie bolts and tighten until they are snug. Allow enough room on the tie bolt to fully engage the nut with several threads showing. Do not tighten these bolts enough to force the spigot further into the bell of the fitting.

Members of...

AMERICAN FOUNDRY SOCIETY

Installation Instructions for Series 2500, 14 inch through 48 inch

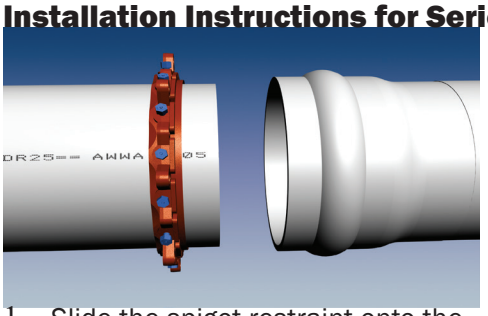

1. Slide the spigot restraint onto the end of the pipe with the lip or the wording "This Side Toward Bell" facing the end of the pipe. Do not tighten the restraint wedges at this time.

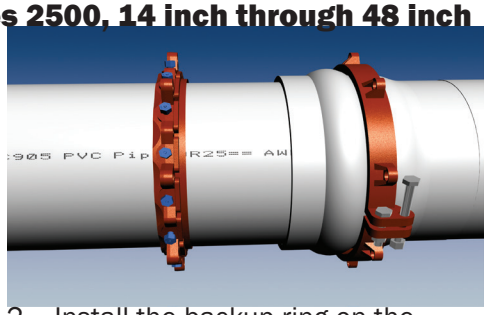

2. Install the backup ring on the fitting bell behind the gasket race as shown. Install the clamp bolts and tighten to 50 ft-lbs. Keeping an equal gap on both sides.

3. Assemble the joint according to the manufacturer's instructions.

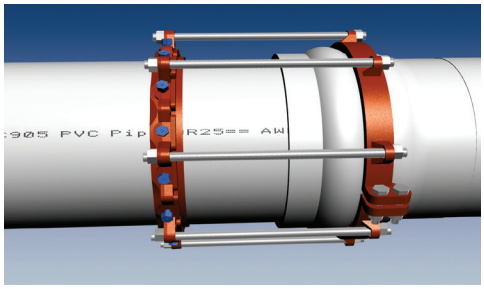

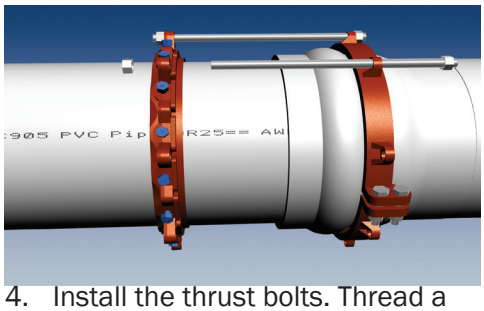

4. Install the thrust bolts. Thread a nut onto each bolt until there are several threads showing.

5. Pull the restraint ring away from the joint until the slack is removed from the thrust bolts. Hand tighten the actuating screws on the restraint ring until all wedges are touching the pipe. Continue tightening the screws in an alternating manner until the torque limiting heads twist off. Tighten thrust bolts until evenly snug being careful not to pull the spigot further into the bell.

EBAA IRON Sales, Inc.
P.O. Box 857, Eastland, TX 76448
Tel: (254) 629-1731
Fax: (254) 629-8931
(800) 433-1716 within US and Canada
contact@ebaa.com
www.ebaa.com

Series 1100SDB

Mid Span Restraint for Ductile Iron Pipe

U.S. Patent Nos
4,092,036 4,627,774 4,779,900 4,896,903 5,544,922

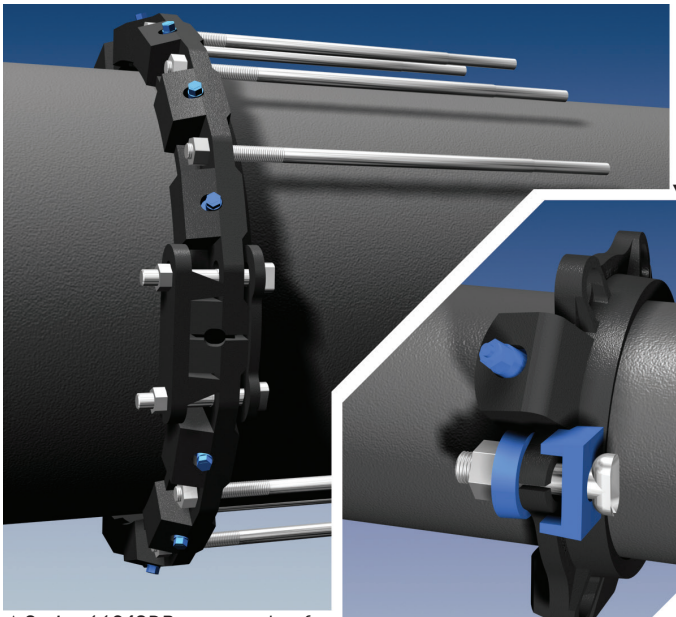

▼Series 1106SDB

▲Series 1124SDB as an anchor for connecting rods.

Nominal Pipe Size	Series Number	Approximate Shipping Weight	Pressure Rating (PSI) Ductile Iron
3	1103SDB	9.4	350
4	1104SDB	10.7	350
6	1106SDB	15.1	350
8	1108SDB	18.8	350
10	1110SDB	38.0	300
12	1112SDB	46.7	300
14	1114SDB	65.7	300
16	1116SDB	73.6	300
18	1118SDB	80.3	200
20	1120SDB	89.5	200
24	1124SDB	151.6	200
30	1130SDB	218.6	200
36	1136SDB	258.6	200
42	1142SDB	467.2	175
48	1148SDB	554.1	175
54	1154SDB	785.0	250

NOTE: For applications or pressures other than those shown, please contact EBAA for assistance.

Features and Applications:

- For use on Ductile Iron Pipe in mid-span restraint applications
- Minimum 2 to 1 Safety Factor
- Split design for ease of installation
- Constructed of ASTM A536 Ductile Iron
- For Submittal Reference Information please refer to the Series 1100 Brochure.

For use on water or wastewater pipelines subject to hydrostatic pressure and tested in accordance with either AWWA C600 or ASTM D2774.

Sample Specification

A mid span restraint anchor point on existing ductile iron pipe shall consist of the following: The restraint shall be split for ease of installation and manufactured of ductile iron conforming to ASTM A536. The restraint devices shall be coated using MEGA-BOND®. (For complete specifications on MEGA-BOND visit www.ebaa.com). The split restraint ring, incorporating a plurality of individually-actuating gripping surfaces, shall be used to grip the pipe. The device shall have a minimum working pressure rating as shown in the product brochure. The restraint shall be the Series 1100SDB, as manufactured by EBAA Iron, Inc. or approved equal.

All EBAA products intended for installation on ductile iron pipe are designed for and limited to use on ductile iron pipes that comply with the requirements of ANSI/AWWA C151/A21.51 and have a Brinell Hardness or equivalent measurement value that does not exceed 230BHN. These requirements apply to the entire pipe wall profile at all restraining wedge engagement points and to the full penetration depth of each restraining wedge.

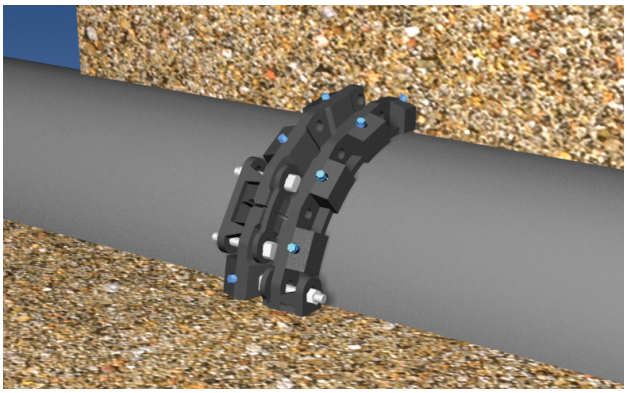

▲Two Series 1124SDB as an anchor in a concrete "Dead Man" wall (polyethylene wrap, not depicted , must be used. See reverse side.).

Copyright © 2024 EBAA Iron, Inc. All Rights Reserved.

Installation Instructions for Series 1100SDB

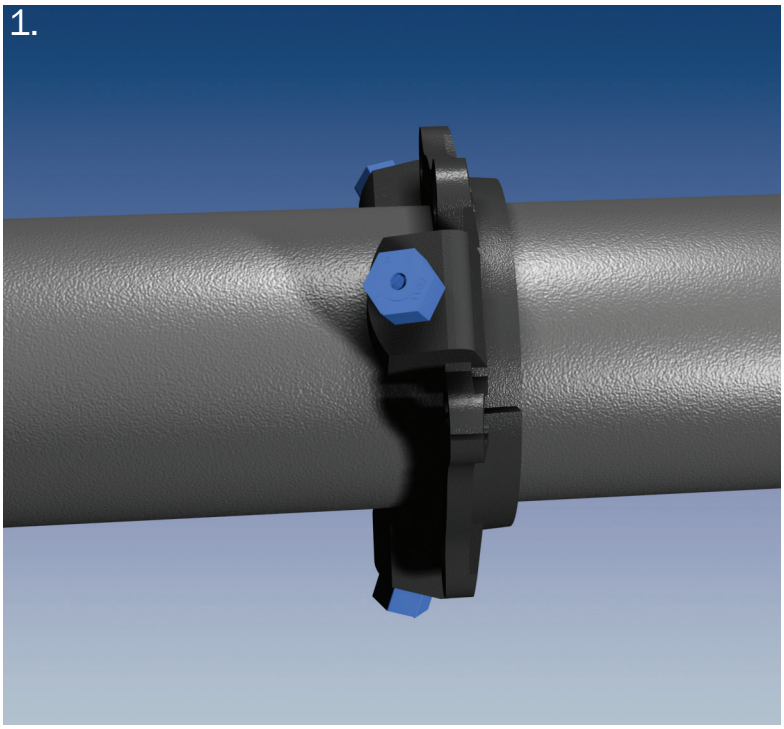

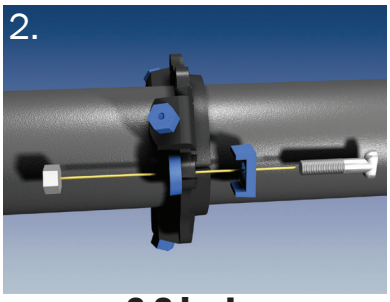

3-8 inch

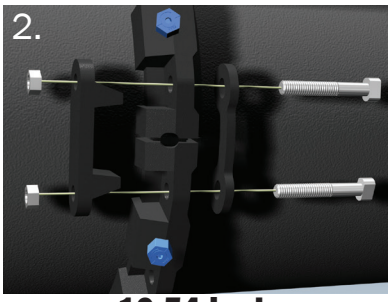

10-54 inch

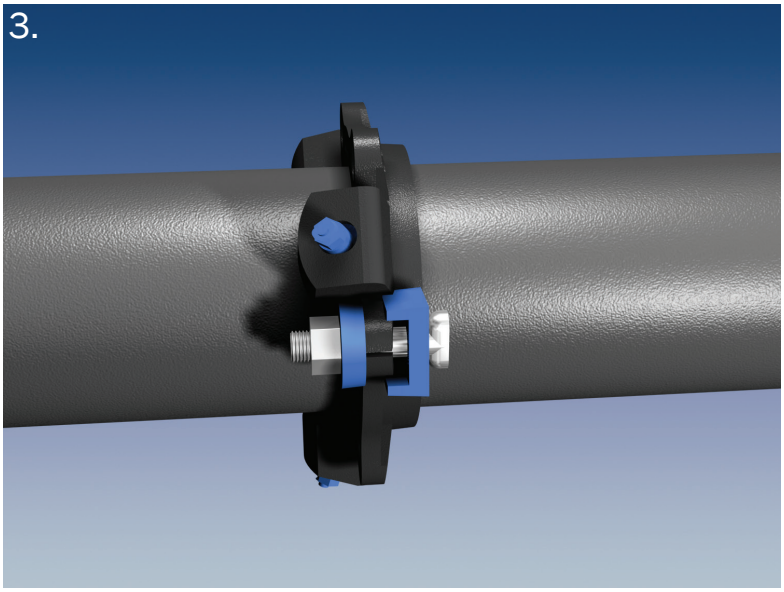

1. Remove the clamps from the split gland. Loosely assemble the halves on the pipe by assembling each clamp so that the angled surfaces of the clamp mate with the angled surfaces on each side of the split, and with the backup plate on the opposite side of the gland from the clamp. Insert the long T-bolt (provided) through the clamps and tighten hand tight.

2. Tighten the T-bolts. Tighten the bolts to the normal range of bolt torque [45-60 ft-lbs for 3 inch, 75-90 ft-lbs for 4 inch through 24 inch, 100-120 ft-lbs 30 inch through 36 inch, and 120-150 ft-lbs for 42 inch through 54 inch]. The use of a torque indicating wrench will facilitate this procedure.

3. Tighten the torque limiting twist-off nuts in a clockwise direction (direction indicated by an arrow on top of nut) until all wedges are in firm contact with the pipe surface. Continue tightening in an alternating manner until all of the nuts have twisted off.

4. If removal is necessary; use the ⅝" (⅞" 1142SDB through 1154SDB) hex heads provided. If reassembly is required, assemble the joint in the same manner as above, tightening the wedge bolts to 90 ft-lbs (135 ft-lbs for 1124SDB through 1154SDB).

Important Note:

When used as an anchor within concrete, polyethylene wrap must be used to prevent concrete intrusion into the wedge pocket.

For Submittal Reference Information please refer to the Series 1100 Brochure.

Members of... AFS AMERICAN FOUNDRY SOCIETY

EBAA IRON Sales, Inc.
P.O. Box 857, Eastland, TX 76448
Tel: (254) 629-1731
Fax: (254) 629-8931
(800) 433-1716 within US and Canada
contact@ebaa.com
www.ebaa.com

Coupling

STYLE 31

SEE VICTAULIC PUBLICATION 10.01 FOR DETAILS

PATENTED

Style 31 couplings are designed to provide a strong component for ductile iron pipe systems of AWWA dimensions. The Style 31 coupling is designed for use on radius cut grooved pipe with minimum wall thickness of ANSI/AWWA C151/A21.51, Class 53. The Style 31 FlushSeal® gasket is specifically designed for ductile pipe surfaces and provides an efficient triple seal. Rigid radius grooved ductile iron systems with Style 31 couplings are comparable with flanged ductile iron systems.

The outside surface of pipe between the groove and pipe end must be smooth and free from deep pits or swells to provide a leak-tight seal for the Victaulic gasket. All rust, loose scale, oil, grease and dirt shall be removed. Peened surfaces may require corrective action in order to provide a leak-tight gasket seal.

Sizes 3 – 12"/80 – 300 mm are two-piece housings, with 14 – 20"/350 – 500 mm sizes cast in four identical segments and 24 – 36"/650 – 900 mm in six segments, to assure concentricity and easy handling.

All sizes are supplied painted, with plated nuts and bolts.

MATERIAL SPECIFICATIONS

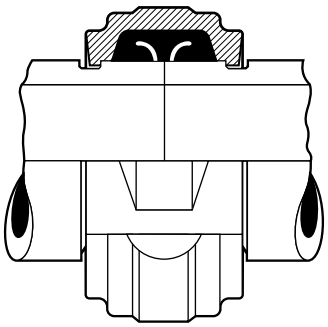

Exaggerated for Clarity

Housing: Ductile iron conforming to ASTM A-536, grade 65-45-12. Ductile iron conforming to ASTM A-395, grade 65-45-15, is available upon special request.

Housing Coating: Couplings are alkyd-phenolic primer (2.5 mil)

Optional:
- Orange enamel
- Coal tar epoxy coating (3 mils)
- Organic zinc primer (3 mils)
- Bituminous coating
- Others available, contact Victaulic

Gasket (specify choice*):

~~**Grade "M" FlushSeal**~~
~~Halogenated Butyl (Brown color code). Temperature range –20°F to +200°F/–29°C to +93°C. Specially compounded to conform to ductile pipe surfaces. Recommended for water service within the specified temperature range plus a variety of dilute acids, oil-free air, and many chemical services. UL classified in accordance with ANSI/NSF 61 for cold +86°F/+30°C potable water service. NOT RECOMMENDED FOR PETROLEUM SERVICES.~~

Grade "S" FlushSeal
Nitrile (Red color code). Temperature range –20°F to +180°F/–29°C to + 82°C. Specifically compounded to conform to ductile pipe surfaces. Recommended for petroleum products, air with oil vapors, vegetable and mineral oils within the specified temperature range; except hot air over +140°F/+60°C and water over +150°F/+66°C. NOT RECOMMENDED FOR HOT WATER SERVICES.

* Services listed are General Service Recommendations only. It should be noted that there are services for which these gaskets are not recommended. Reference should always be made to the latest Victaulic Gasket Selection Guide for specific gasket service recommendations and for a listing of services which are not recommended.

Bolts/Nuts: Heat-treated plated carbon steel, trackhead meeting the physical and chemical requirements of ASTM A-449 and physical requirements of ASTM A-183.

~~**Optional:** Type 316 Stainless Steel, Grade B-8M, Class 2~~

JOB/OWNER	CONTRACTOR	ENGINEER
System No. _____	Submitted By _____	Spec Sect _____ Para _____
Location _____	Date _____	Approved _____
		Date _____

VICTAULIC IS A REGISTERED TRADEMARK OF VICTAULIC COMPANY. © 2012 VICTAULIC COMPANY. ALL RIGHTS RESERVED.

Coupling

STYLE 31

DIMENSIONS

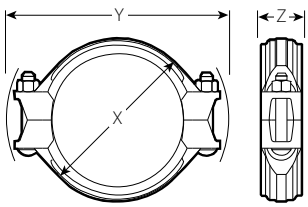

3 – 12" Sizes

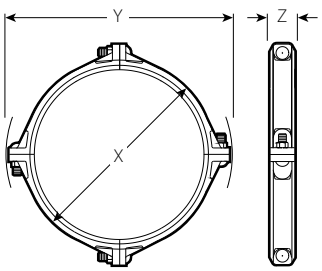

14 – 20" Sizes

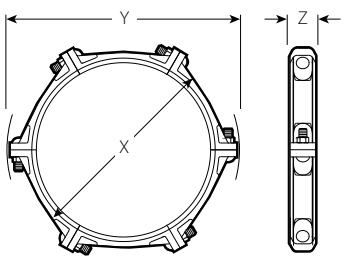

24 – 36" Sizes

Pipe Size					Deflect Fr. C_L *†			Coupling Dimensions Inches/mm			
Nominal Dia. In./mm	Actual Out. Dia. In./mm	Max. Work Pres. PSI/kPa	Max. End Load Lbs.*/N	Allow. Pipe End *† Sep. In./mm	Per Cplg. Degree	Pipe In./Ft. mm/m	Bolt/Nut No. Size Inches @	X	Y	Z	Aprx. Wgt. Each Lbs./kg
3 80	3.960 100.6	500 3450	6200 27590	0 - 0.09 0 - 2.4	1° - 21´	0.28 23	2 – ½ x 2¾	5.50 140	7.63 194	2.13 54	4.8 2.2
4 100	4.800 121.9	500 3450	9000 40050	0 - 0.09 0 - 2.4	1° - 8´	0.21 17	2 – ⅝ x 3¼	6.25 159	9.20 234	2.09 53	7.5 3.4
6 150	6.900 175.3	400 2750	14950 66528	0 - 0.09 0 - 2.4	0° - 47´	0.14 12	2 – ⅝ x 3¼	8.28 210	11.19 284	2.22 56	9.4 4.3
8 200	9.050 229.9	400 2750	25600 113920	0 - 0.09 0 - 2.4	0° - 36´	0.11 9	2 – ¾ x 5	10.74 273	14.33 364	2.59 66	16.5 7.5
10 250	11.100 281.9	350 2410	33850 150632	0 - 0.16 0 - 4.0	0° - 48´	0.15 13	2 – ¾ x 5	12.84 326	16.44 418	2.75 70	22.5 10.2
12 300	13.200 335.3	350 2410	47.900 21150	0 - 0.16 0 - 4.0	0° - 41´	0.13 11	2 – ⅞ x 5	15.27 388	19.16 487	2.75 70	30.0 14.0
14 350	15.300 388.6	250 1725	45950 204470	0 - 0.16 0 - 4.0	0° - 35´	0.11 9	4 – 1 x 3½	17.21 437	21.96 558	2.75 70	40.8 18.5
16 400	17.400 442.0	250 1725	59400 264330	0 - 0.25 0 - 6.4	0° - 49´	0.16 13	4 – 1 x 3½	19.90 505	23.96 609	3.50 89	61.3 27.8
18 ‡ 450	19.500 495.3	250 1725	74650 332190	0 - 0.25 0 - 6.4	0° - 44´	0.14 12	4 – 1 x 3½	22.03 560	26.33 669	3.50 89	80.0 36.3
20 500	21.600 548.6	150 1035	54900 244305	0 - 0.25 0 - 6.4	0° - 40´	0.12 10	4 – 1⅛ x 4	24.13 613	28.69 729	3.50 89	76.0 34.5
24 600	25.800 655.3	150 1035	78.400 34880	0 - 0.25 0 - 6.4	0° - 33´	0.11 9	6 – 1⅛ x 4	28.31 719	33.06 840	3.50 89	104.0 47.2
30 750	32.000 812.8	150 1035	120570 536530	0 - 0.47 0 - 11.9	0° - 51´	0.17 14	6 – 1⅛ x 4	35.02 890	39.39 1001	4.38 111	162.0 73.5
36 900	38.300 972.8	150 1035	172815 769030	0 - 0.47 0 - 11.9	0° - 47´	0.15 13	6 – 1⅛ x 4	41.56 1056	46.04 1169	4.44 113	200.0 90.7

‡ For class 53 pipe rating is 150 psi (1035 kPa). For larger couplings contact Victaulic.

* Working Pressure and End Load are total, from all internal and external loads, based on AWWA class 53 (except where noted) ductile iron pipe radius cut grooved in accordance with ANSI/AWWA C-606 specifications. Contact Victaulic for performance on other pipe. WARNING: FOR ONE TIME FIELD TEST ONLY, the Maximum Joint Working Pressure may be increased to 1 ½ times the figures shown.

† Allowable Pipe End Separation and Deflection figures show the maximum nominal range of movement available at each joint for pipe prepared to flexible radius cut grooved specifications. Pipe cut grooved to rigid specifications is essentially rigid and does not permit expansion and contraction.

@ Number of bolts required equals number of housing segments. Metric thread size bolts are available (color coded gold) for all coupling sizes upon request. Contact Victaulic for details.

WARNING: Depressurize and drain the piping system before attempting to install, remove, or adjust any Victaulic piping products.

VICTAULIC IS A REGISTERED TRADEMARK OF VICTAULIC COMPANY. © 2012 VICTAULIC COMPANY. ALL RIGHTS RESERVED.

Coupling

STYLE 31

WARRANTY

Refer to the Warranty section of the current Price List or contact Victaulic for details.

NOTE

This product shall be manufactured by Victaulic or to Victaulic specifications. All products to be installed in accordance with current Victaulic installation/assembly instructions. Victaulic reserves the right to change product specifications, designs and standard equipment without notice and without incurring obligations.

INSTALLATION

Reference should always be made to the I-300 Victaulic Field Installation Handbook for the product you are installing. Handbooks are included with each shipment of Victaulic products for complete installation and assembly data, and are available in PDF format on our website at www.victaulic.com.

VICTAULIC IS A REGISTERED TRADEMARK OF VICTAULIC COMPANY. © 2012 VICTAULIC COMPANY. ALL RIGHTS RESERVED.

Vic-Flange® Adapter
Style 341

23.04

3 – 12" Sizes

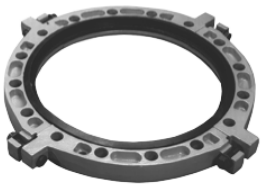

14 – 24" Sizes

1.0 PRODUCT DESCRIPTION

Available Sizes

- 3 – 24"/DN80 – DN600

Maximum Working Pressure

- Up to 250 psi/1725 kpa

Application

- Designed for directly incorporating flanged components with ANSI B16.1 (CL. 125) bolt hole patterns into grooved piping systems.

Pipe Material

- Ductile iron, cast iron

2.0 CERTIFICATION/LISTINGS

UL LISTED FM APPROVED

NOTE

- Refer to Victaulic submittal publication 10.01 for details.

ALWAYS REFER TO ANY NOTIFICATIONS AT THE END OF THIS DOCUMENT REGARDING PRODUCT INSTALLATION, MAINTENANCE OR SUPPORT.

 © 2022 Victaulic Company. All rights reserved.

3.0 SPECIFICATIONS – MATERIAL

Housing:

Ductile iron conforming to ASTM A536, Grade 65-45-12. Ductile iron conforming to ASTM A395, Grade 65-45-15, is available upon special request.

Flange Coating: (specify choice)

- ☐ Standard: Alkyd-phenolic primer.
- ☐ Optional: Orange enamel.
- ☐ Optional: Coal tar epoxy coating (3 mils).
- ☐ Optional: Organic zinc primer (3 mils).
- ☐ Optional: Bituminous coating.

NOTE

- **Others available, contact Victaulic.**

Gasket: (specify choice1)

☐ **Grade "M" Halogenated Butyl**

Halogenated Butyl (Brown color code). Temperature range –20°F to + 200°F/–29°C to +93°C. Specifically compounded to conform to ductile pipe surfaces. Recommended for water service within the specified temperature range plus a variety of dilute acids, oil-free air and many chemical services. UL classified in accordance with ANSI/NSF 61 for cold +86°F/+30°C potable water service. NOT RECOMMENDED FOR PETROLEUM SERVICES.

☐ **Grade "S" Nitrile**

Nitrile (Red color code). Temperature range –20°F to +180°F/–29°C to +82°C. Specially compounded to conform to ductile pipe surfaces. Recommended for petroleum products, air with oil vapors, vegetable and mineral oils within the specified temperature range; except hot dry air over + 140°F/+60°C) and water over +150°F/+66°C. NOT RECOMMENDED FOR HOT WATER SERVICES.

[1] Services listed are General Service Guidelines only. It should be noted that there are services for which these gaskets are not compatible. Reference should always be made to the latest Victaulic Gasket Selection Guide for specific gasket service guidelines and for a listing of services which are not compatible.

Bolts/Nuts: (specify choice)

☐ **Standard:** Carbon steel oval neck track bolts meeting the mechanical property requirements of ASTM A449. Carbon steel heavy hex nuts meeting the mechanical property requirements of ASTM A563 Grade B. Track bolts and heavy hex nuts are zinc electroplated per ASTM B633 ZN/FE5, finish Type III (imperial) or Type II (metric).

☐ **Optional:** Bolts – Stainless steel, meeting the mechanical property requirements of ASTM F593, Group 2 (316 stainless steel), condition CW. Nuts – Stainless Steel meeting the mechanical property requirements of ASTM F594, Group 2 (316 stainless steel), condition CW, with galling reducing coating.2

[2] Optional bolts/nuts are available in imperial size only.

 © 2022 Victaulic Company. All rights reserved.

4.0 DIMENSIONS

Style 341

Note: Gray area of mating face must be free from gouges, undulations or deformities of any type for effective sealing.

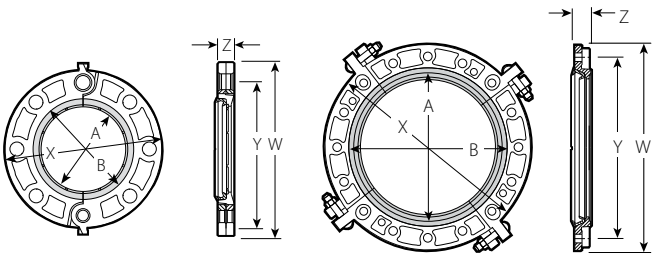

3 – 12" Sizes 14 – 24" Sizes

Size		Assembly Bolts[3]		Draw Bolts[4]		Dimensions				Weight
Nominal inches DN	**Actual Outside Diameter** inches mm	**Qty.**	**Size** inches	**Qty.**	**Size** inches	**W** inches mm	**X** inches mm	**Y** inches mm	**Z** inches mm	**Approximate (Each)** lb kg
3 80	3.96 100.6	4	⅝ x 3	–	–	8.44 214	7.50 191	6.00 152	0.94 24	5.4 2.4
4 100	4.80 121.9	8	⅝ x 3	–	–	9.94 252	9.00 229	7.50 191	0.94 24	8.2 3.7
6 150	6.90 175.3	8	¾ x 3 ½	–	–	12.00 305	11.00 279	9.50 241	1.00 25	12.0 5.4
8 200	9.05 229.9	8	¾ x 3 ½	–	–	14.63 372	13.50 343	11.75 298	1.13 29	17.4 7.9
10 250	11.10 281.9	12	⅞ x 4	–	–	17.13 435	16.00 406	14.25 362	1.19 30	24.6 11.2
12 300	13.20 335.5	12	⅞ x 4	–	–	20.13 511	19.00 483	17.00 432	1.25 32	34.4 15.6
14 350	15.30 388.6	12	1 x 4 ¼	4	⅝ x 3 ½	24.63 626	21.00 533	18.75 476	1.50 38	55.0 25.0
16 400	17.40 442.0	16	1 x 4 ¾	4	⅝ x 3 ½	27.25 693	23.50 597	21.25 540	1.88 48	80.0 36.3
18 450	19.50 495.3	16	1 ⅛ x 5 ½	4	¾ x 4 ¼	29.13 740	25.00 635	22.75 578	2.25 57	95.0 43.1
20 500	21.60 548.6	20	1 ⅛ x 5 ¾	4	¾ x 4 ¼	31.63 803	27.50 699	25.00 635	2.38 61	115.0 52.2
24 600	25.80 655.3	20	1 ¼ x 6¼	4	¾ x 5	36.13 918	32.00 813	29.50 749	2.50 64	150.0 68.0

3 Total bolts required are to be supplied by the installer. Bolt sizes are for conventional flange-to-flange connections. Longer bolts are required when Vic-Flange Adapters are used with wafer-type valves.

4 Supplied with Vic-Flange Adapter.

NOTE

- Metric thread size draw bolts are available (color coded gold) for all coupling sizes upon request. Contact Victaulic for details.

 © 2022 Victaulic Company. All rights reserved.

4.1 DIMENSIONS

Style 341
Required Sealing Surface

Note: Gray area of mating face must be free from gouges, undulations or deformities of any type for effective sealing.

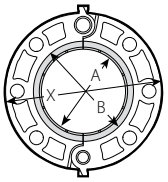

3 – 12" Sizes

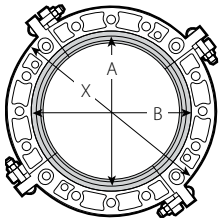

14 – 24" Sizes

Sealing Surface			
Flange Size			
Nominal Diameter inches DN	**Actual Outside Diameter** inches mm	**A** **Maximum** inches mm	**B** **Minimum** inches mm
3 80	3.96 100.6	3.96 101	4.94 125
4 100	4.80 121.9	4.80 122	5.88 149
6 150	6.90 175.3	6.90 175	8.00 203
8 200	9.05 229.9	9.05 230	10.13 257
10 250	11.10 281.9	11.10 282	12.50 318
12 300	13.20 335.5	13.20 335	14.75 375
14 350	15.30 388.6	15.30 389	16.38 416
16 400	17.40 442.0	17.40 442	18.38 467
18 450	19.50 495.3	19.50 495	20.00 508
20 500	21.60 548.6	21.60 549	22.50 572
24 600	25.80 655.3	25.80 655	27.75 705

NOTE
- Vic-Flange gasket requires sufficient flat face area on the mating flange for proper gasket sealing. See chart for dimensions.

 © 2022 Victaulic Company. All rights reserved.

5.0 PERFORMANCE

Style 341

Size		Maximum Working Pressure[5]	Maximum End Load[5]
Nominal inches DN	**Actual Outside Diameter** inches mm	psi kPa	lb N
3 80	3.96 100.6	250 1725	3100 13795
4 100	4.80 121.9	250 1725	4500 20025
6 150	6.90 175.3	250 1725	9300 41385
8 200	9.05 229.9	250 1725	16000 71200
10 250	11.10 281.9	250 1725	23700 105465
12 300	13.20 335.5	250 1725	34000 151300
14 350	15.30 388.6	200 1375	36700 163315
16 400	17.40 442.0	150 1035	35600 158420
18 450	19.50 495.3	150 1035	44700 198915
20 500	21.60 548.6	150 1035	54900 244305
24 600	25.80 655.3	150 1035	78400 348880

[5] Working Pressure and End Load are total, from all internal and external loads, based on AWWA class 53 ductile iron pipe radius cut grooved in accordance with ANSI/AWWA C-606 and Victaulic specifications. Contact Victaulic for performance on other pipe.

NOTE

- WARNING: FOR ONE TIME FIELD TEST ONLY, the Maximum Joint Working Pressure may be increased to 1½ times the figures shown.

6.0 NOTIFICATIONS

Important Installation Considerations

- The gasket seating surfaces on the pipe and on the face of the mating flange must be free from gouges, indentations and deformities of any type for proper sealing. Refer to the installation instructions for complete information.
- Vic-Flange Adapters must be assembled so there is no interference with mating components.
- When wafer or lug-type valves are used adjoining a Victaulic fitting, check disc dimensions to ensure proper clearance.
- Vic-Flange Adapters must not be used as anchor points for tie rods across non-restrained joints.
- Mating Vic-Flange Adapters to rubber faced flanges, valves, etc. requires the use of a Vic-Flange Washer. Refer to the "Vic-Flange Washer Notes" section below.
- The lettering on the outside of the gasket must face the gasket pocket of the Vic-Flange Adapter. When installed correctly, the lettering on the gasket will not be visible.
- When mating two Vic-Flange Adapters, the hinge points/ draw bolt locations must be staggered, and a flange washer (3" – 12") or transition ring (14" – 24") must be used between the two Vic-Flange Adapters.

 © 2022 Victaulic Company. All rights reserved.

6.0 NOTIFICATIONS (Continued)

Vic-Flange Adapters require a smooth, hard surface at the mating flange face for proper sealing. Some applications, for which the Vic-Flange Adapter is otherwise well suited, do not provide an adequate mating surface. In such cases, a metal Vic-Flange Washer is recommended for insertion between the Vic-Flange Adapter and the mating flange to provide the necessary sealing surface. To ensure the proper Vic-Flange Washer is supplied, always specify the product style and size when ordering.

A. When mating to a serrated flange – a flange gasket should be used against the serrated flange. The Vic-Flange Washer should then be inserted between the Vic-Flange Adapter and the flange gasket.

B. When mating to a wafer-type valve that is rubber lined and partially rubber-faced (smooth or not) – the Vic-Flange Washer should be placed between the valve and the Vic-Flange Adapter.

C. When mating to a rubber-faced flange, valve, etc. – the Vic-Flange Washer must be placed between the Vic-Flange Adapter and the rubber-faced flange.

D. When mating to components (valves, strainers, etc.) where the component flange face has an insert – follow the same arrangement as if the Vic-Flange Adapter was being mated to a serrated flange. Refer to application "A" above.

E. When mating AWWA cast flanges to IPS flanges – the Vic-Flange Transition Ring is placed between the two Vic- Flange Adapters with the draw bolt locations staggered. If one flange is not a Vic-Flange Adapter (i.e. flanged valve), a flange gasket must be placed against that flange. The Vic-Flange Washer must then be inserted between the flange gasket and the Vic-Flange gasket. NOTE: Transition rings, rather than Vic-Flange Washers, must be used when mating Style 741 Vic-Flange Adapters to Style 341 Vic-Flange Adapters in sizes 14 – 24" (DN350 – DN600).

Torque Requirements

Vic-Flange adapters should be installed using the bolt torque listed below:

- 14 – 16" Sizes: 250 – 300 ft. lbs.
  (339 – 407 N•m)
- 18 – 20" Sizes: 300 – 350 ft. lbs.
  (407 – 475 N•m)
- 24" Size: 350 - 400 ft. lbs.
  (475 – 542 N•m)

Exceeding these values may create leakage. Additional levels of torque will not enhance gasket sealing.

7.0 REFERENCE MATERIALS

10.01: Regulatory Approval Reference Guide
23.01: AWWA Ductile Iron Pipe - Grooved System
23.05: AWWA (Cast) Fittings
29.01: Terms and Conditions/Warranty
I-300: Field Installation Handbook

User Responsibility for Product Selection and Suitability
Each user bears final responsibility for making a determination as to the suitability of Victaulic products for a particular end-use application, in accordance with industry standards and project specifications, and the applicable building codes and related regulations as well as Victaulic performance, maintenance, safety, and warning instructions. Nothing in this or any other document, nor any verbal recommendation, advice, or opinion from any Victaulic employee, shall be deemed to alter, vary, supersede, or waive any provision of Victaulic Company's standard conditions of sale, installation guide, or this disclaimer.

Intellectual Property Rights
No statement contained herein concerning a possible or suggested use of any material, product, service, or design is intended, or should be constructed, to grant any license under any patent or other intellectual property right of Victaulic or any of its subsidiaries or affiliates covering such use or design, or as a recommendation for the use of such material, product, service, or design in the infringement of any patent or other intellectual property right. The terms "Patented" or "Patent Pending" refer to design or utility patents or patent applications for articles and/or methods of use in the United States and/or other countries.

Note
This product shall be manufactured by Victaulic or to Victaulic specifications. All products to be installed in accordance with current Victaulic installation/assembly instructions. Victaulic reserves the right to change product specifications, designs and standard equipment without notice and without incurring obligations.

Installation
Reference should always be made to the Victaulic installation handbook or installation instructions of the product you are installing. Handbooks are included with each shipment of Victaulic products, providing complete installation and assembly data, and are available in PDF format on our website at www.victaulic.com.

Warranty
Refer to the Warranty section of the current Price List or contact Victaulic for details.

Trademarks
Victaulic and all other Victaulic marks are the trademarks or registered trademarks of Victaulic Company, and/or its affiliated entities, in the U.S. and/or other countries.

 © 2022 Victaulic Company. All rights reserved.

ANSI/AWWA C153/A21.53
Mechanical Joint Compact
Ductile Iron Glands
Revised 6/2017

☐ **DOMESTIC** ☐ **NON-DOMESTIC**

SUBMITTAL: C153 MECHANICAL JOINT GLANDS

(Current revisions for the noted Standards apply)

SIZES: 2" - 64" (2" not included in ANSI/AWWA C153 standard)
STANDARDS: ANSI/AWWA C153/A21.53, NFPA13/24, 3"-12" UL and 3"-12" FM listed & approved (File - Tyler Union)
MATERIAL: Cast of ASTM A536 qualified ductile iron. Date code is cast on and required for traceability.
DEFLECTION: Joint deflection 5° max for 2"– 12" and 3° max for 14"– 48". Reduces by 50% at nominal pipe & fitting diameters
NSF-61 & NSF372: Meets all requirements including Annex G, Tyler Union's Underwriters Laboratory listing MH16439.
ASPHALT COATING: Per ANSI/AWWA C104/A21.4 and ANSI/AWWA C153/A21.53.
EPOXY COATING: Fusion bonded epoxy per ANSI/AWWA C116/A21.16. Additional coatings available upon request.
BARE FITTINGS: Available upon request.
FASTNERS: High strength low alloy weathering steel per ANSI/AWWA C111/A21.11 and ASTM A242
INSTALLATION: Install per AWWA C600/C651 using pipe conforming to ANSI/AWWA C151/A21.51 or AWWA C900/905.

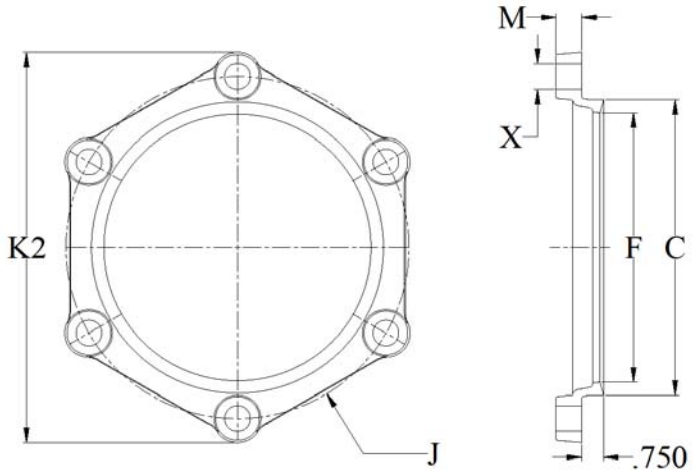

NOMINAL JOINT DIMENSIONS IN INCHES

Size Inches	DI Pipe Dia.	C Dia. GLAND	F Dia.	J Dia. GLAND	K^2 Dia. GLAND	M GLAND	X	Size	Qty.
3	3.96	4.84	4.06	6.19	7.69	0.62	3/4	5/8x3	4
4	4.80	5.92	4.90	7.50	9.12	0.75	7/8	3/4x3-1/2	4
6	6.90	8.02	7.00	9.50	11.12	0.88	7/8	3/4x3-1/2	6
8	9.05	10.17	9.15	11.75	13.37	1.00	7/8	3/4x4	6
10	11.10	12.22	11.20	14.00	15.62	1.00	7/8	3/4x4	8
12	13.20	14.32	13.30	16.25	17.88	1.00	7/8	3/4x4	8
14	15.30	16.40	15.44	18.75	20.25	1.25	7/8	3/4x4-1/2	10
16	17.40	18.50	17.54	21.00	22.50	1.31	7/8	3/4x4-1/2	12
18	19.50	20.60	19.64	23.25	24.75	1.38	7/8	3/4x4-1/2	12
20	21.60	22.70	21.74	25.50	27.00	1.44	7/8	3/4x4-1/2	14
24	25.80	26.90	25.94	30.00	31.50	1.56	7/8	3/4x5	16
30	32.00	33.29	32.17	36.88	39.12	2.00	1-1/8	1x6	20
36	38.30	39.59	38.47	43.75	46.00	2.00	1-1/8	1x6	24
42	44.50	45.79	44.67	50.62	53.12	2.00	1-3/8	1-1/4x6-1/2	28
48	50.80	52.09	50.97	57.50	60.00	2.00	1-3/8	1-1/4x6-1/2	32
54	Available on Request								
60	Available on Request								
64	Available on Request								

Tyler Union Waterworks – Call Center Information
Anniston: (800) 226-7601
Corona: (866) 527-8471
Tyler: (800) 527-8478

SUBMITTAL

(Current revisions for the noted Standards apply)

Tyler Union Waterworks provides that our *Mechanical and Push-On joint gaskets and dimensions conform to the specifications in ANSI/AWWA C111/A21.11 (current revision). Markings include size, mold number, gasket manufacturer's mark, country where molded, and product identification letters. No markings are placed on sealing surfaces per the AWWA C111 standard.

*Note: Push-On and Mechanical Joint transition gasket design standards and markings are not addressed by ANSI/AWWA C111/A21.11 (current revision). Transition gaskets provided by Tyler Union follow the material testing standards and specifications established for ANSI/AWWA C111/A21.11 gaskets.

Gasket material is vulcanized styrene butadiene rubber (SBR). Purchaser may request special application elastomers (EPDM, Nitrile, Neoprene & FKM) which will be identified on all documentation and corresponding gaskets. Gaskets are free of foreign materials, porous areas, or other defects that make them unfit for the intended use.

Tyler Union gaskets are manufactured under quality control standards and procedures that are maintained by the gasket supplier. Appropriate documentation is maintained by the manufacturer and available for review upon request. Properties and test methods for SBR, EPDM, Nitrile, Neoprene and FKM gaskets are as provided.

Property	ASTM Test Method	Required Value
Hardness, Shore “A”	D2240-86	75 (+-5)
Minimum Tensile	D412-87	1500 psi (10MPa)
Minimum Elongation	D412-87	150 %
Minimum Aging	D572-88	60 %
Maximum Compression Set	D395-89, Method B	20 %
Resistance to surface Ozone cracking	D1149-86	No cracking

Tyler Union's approved suppliers maintain a quality assurance program that is reviewed and updated on an ongoing basis to ensure product quality. Tyler Union's gasket suppliers submit gaskets for testing and provide materials for testing to Underwriters Laboratories, Inc. Tyler Union's gasket providers are recognized under the component program (UL 194/ UL 157) of Underwriters Laboratories, Inc.. Tyler Union UL approved gaskets meet NSF-61, NSF-372 and Annex G.

Tyler Union provides that our Mechanical and Push-On joint gaskets for potable or wastewater projects will perform as designed when selected per the chart provided and installed per AWWA C600-10.

SBR (Styrene Butadiene rubber)(Buna-S) Not Recommended for Hydrocarbon Service	20°F to180°F	Suitable for Water, Wastewater, most moderate chemicals, wet or dry organic acids, alcohols, ketones, and aldehydes
EPDM (Ethylene Propylene) Not Recommended for Hydrocarbon Service	-10°F to 250°F	Ideal for water, wastewater, ozone, & strong oxidizing chemicals May be used on steam and air within its temperature range
CR (Neoprene)	-10°F to 200°F	Recommended for moderate chemicals and acids, oil fats, greases, many solvents and air with hydrocarbons. Will not support combustion
NBR (Nitrile)(Buna-N)(Hycar)	-40°F to 250°F	Ideally suited for gasoline, petrolium products, hydrocarbons, water, mineral and vegetable oils
*FKM(Fluoroelastomer) *Check with Customer Service for availability	10°F to 425°F	Ideally suited for hydrocarbons, acids, vegetable oils & petrolium
Gasket Types Offered:		(1)Mechanical Joint std.(2) Push-On Joint std.(3)Mechanical Joint DUO (4)Mechanical & Push-on Joint Transition(5)Push-on Restraining (6)Mechanical Joint Armor Tip Conductivity(7)Compact tapping Sleeve

Unless other wise requested by the purchaser upon order placement, all gaskets provided will be of our standard SBR material.

TYLER UNION®
Quality Waterworks Products

Mechanical Joint Gaskets

ANSI/AWWA C111/A21.11-12
*MJ Tru-Lock Gaskets 30-48 inch

Pipe Size	Pipe OD	A ±0.01''	B	C	D ±1%	E ±0.01%	F ±0.01''	G ±0.02''
**2	2.50	0.48	0.62	0.31	2.48	0.12	0.15	1.05
3	3.96	0.48	0.62	0.31	3.86	0.12	0.15	1.05
4	4.80	0.62	0.75	0.31	4.68	0.16	0.22	1.22
6	6.90	0.62	0.75	0.31	6.73	0.16	0.22	1.22
8	9.05	0.62	0.75	0.31	8.85	0.16	0.22	1.22
10	11.10	0.62	0.75	0.31	10.87	0.16	0.22	1.22
12	13.20	0.62	0.75	0.31	12.95	0.16	0.22	1.22
14	15.30	0.62	0.75	0.31	14.99	0.16	0.22	1.22
16	17.40	0.62	0.75	0.31	17.07	0.16	0.22	1.22
18	19.50	0.62	0.75	0.31	19.13	0.16	0.22	1.22
20	21.60	0.62	0.75	0.31	21.20	0.16	0.22	1.22
24	25.80	0.62	0.75	0.31	25.34	0.16	0.22	1.22
30	32.00	0.73	1.00/*.50	.38/*.50	31.47	0.16	.37/*.55	1.54/*1.16
36	38.30	0.73	1.00/*.50	.38/*.50	37.67	0.16	.37/*.55	1.54/*1.16
42	44.50	0.73	1.00/*.50	.38/*.50	43.78	0.16	.37/*.55	1.54/*1.16
48	50.80	0.73	1.00/*.50	.38/*.50	49.98	0.16	.37/*.55	1.54/*1.16

** Not included in AWWA C111. Manufacture's Standard does not meet AWWA C111

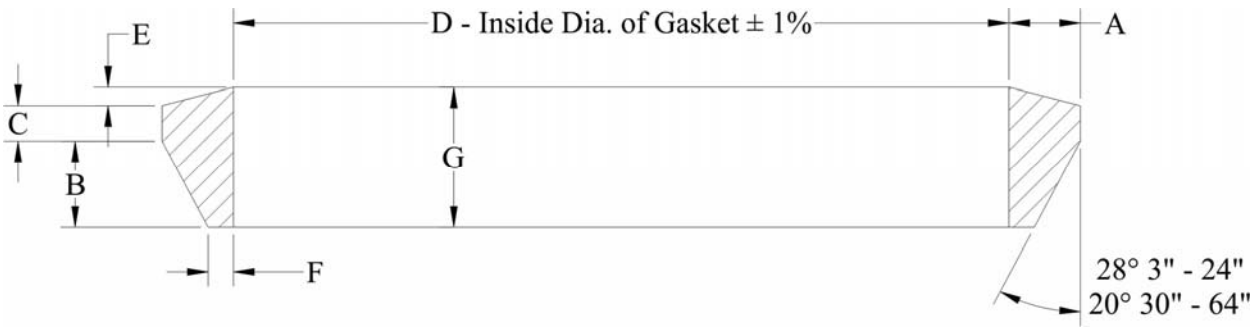

** Mechanical Joint Transition Gasket Dimensions in Inches

Pipe Size	A ± 0.01"	B	C	D ±1%	E	F ± 0.01"	G ± 0.02"
2	0.57	0.62	0.31	2.28	0.16	0.24	1.08
3	0.70	0.62	0.31	3.45	0.16	0.37	1.11
4	0.77	0.75	0.31	4.43	0.16	0.37	1.26
6	0.76	0.75	0.31	6.53	0.16	0.36	1.25
8	0.82	0.75	0.31	8.50	0.16	0.42	1.27
10	0.79	0.75	0.31	10.59	0.16	0.39	1.26
12	0.84	0.75	0.31	12.56	0.16	0.44	1.28

** Not included in AWWA C111. Manufacture's Standard does not meet AWWA C111

SUBMITTAL: C111 T-BOLTS AND NUTS FOR MECHANICAL JOINT

(Current revisions for all noted Standards apply)

SIZES: 5/8 X 3 through 1-1/4 X 8.5

STANDARDS: ANSI/AWWA C111/A21.11

Material: ASTM A242 High Strength Low Alloy Steel. Also available in ANSI 304 or 316 AISI Stainless Steel.

COATING: Standard bolts and nuts are not coated. Stainless Steel bolt and coated Green or Red. Flouropolymer costing is available on request. Flouropolymer is Flurokote #1 (Blue for Low Alloy Steel).

FASTENERS: High strength low alloy weathering steel per ANSI/AWWA C111/A21.11 and ASTM A242.

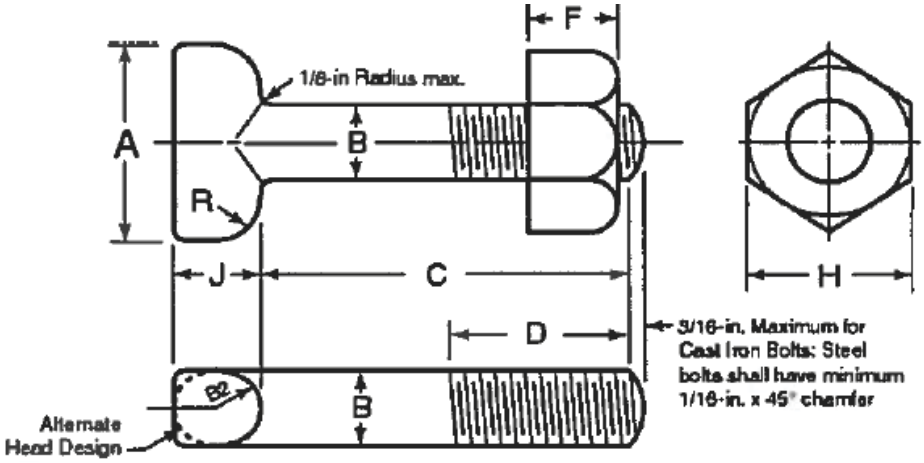

T-HEAD LOW ALLOY WEATHERING AND AISI STAINLESS STEEL FASTENER DIMENSION IN INCHES									
Size Inches	A ± 0.05	B +0.03 / - 0.074	C +0.25 / - 0.06	F	H	J +0.15/0.03	R Max	D*	Threads Per Inch E**
5/8 x 3	1.5	0.625	3.00	0.625	1.062	0.625	0.312	2.00	11
3/4 x 3.5	1.75	0.750	3.50	0.750	1.250	0.750	0.375	2.50	10
3/4 x 4	1.75	0.750	4.00	0.750	1.250	0.750	0.375	3.00	10
3/4 x 4.5	1.75	0.750	4.50	0.750	1.250	0.750	0.375	3.00	10
3/4 x 5	1.75	0.750	5.00	0.750	1.250	0.750	0.375	3.00	10
1 x 6	1.75	1.000	6.00	1.000	1.625	1.000	0.500	3.00	8
1 x 7.5	2.25	1.000	7.50	1.000	1.625	1.000	0.625	4.50	8
1 - 1/4 x 6.5	2.50	1.250	6.50	1.250	2.000	1.250	0.750	3.50	7
1 - 1/4 x 8.5	2.50	1.250	8.50	1.250	2.000	1.250	0.750	4.00	7

NOTES:

1. Dimension B is unthreaded shank.
2. Draft, when required to be 6 degree maximum, may be deducted from bolt head dimensions, and radius (B/2) may be changed to suit draft.
3. Gates, if required, may protrude a maximum of 1/8'' above the top of bolt thread.
4. Chamfer is optional if threads are rolled.
5. If threads are rolled, the body diameter may be reduced to the approximate pitch diameter of the thread.
6. * Tolerance +3/-0 thread.
7. ** Number of threads per inch – course-thread series (ANSI/ASME B1.1), Class 2A, external fit UNC2A and Class 2B, UNC2B (ANSI/ASME B1.2).