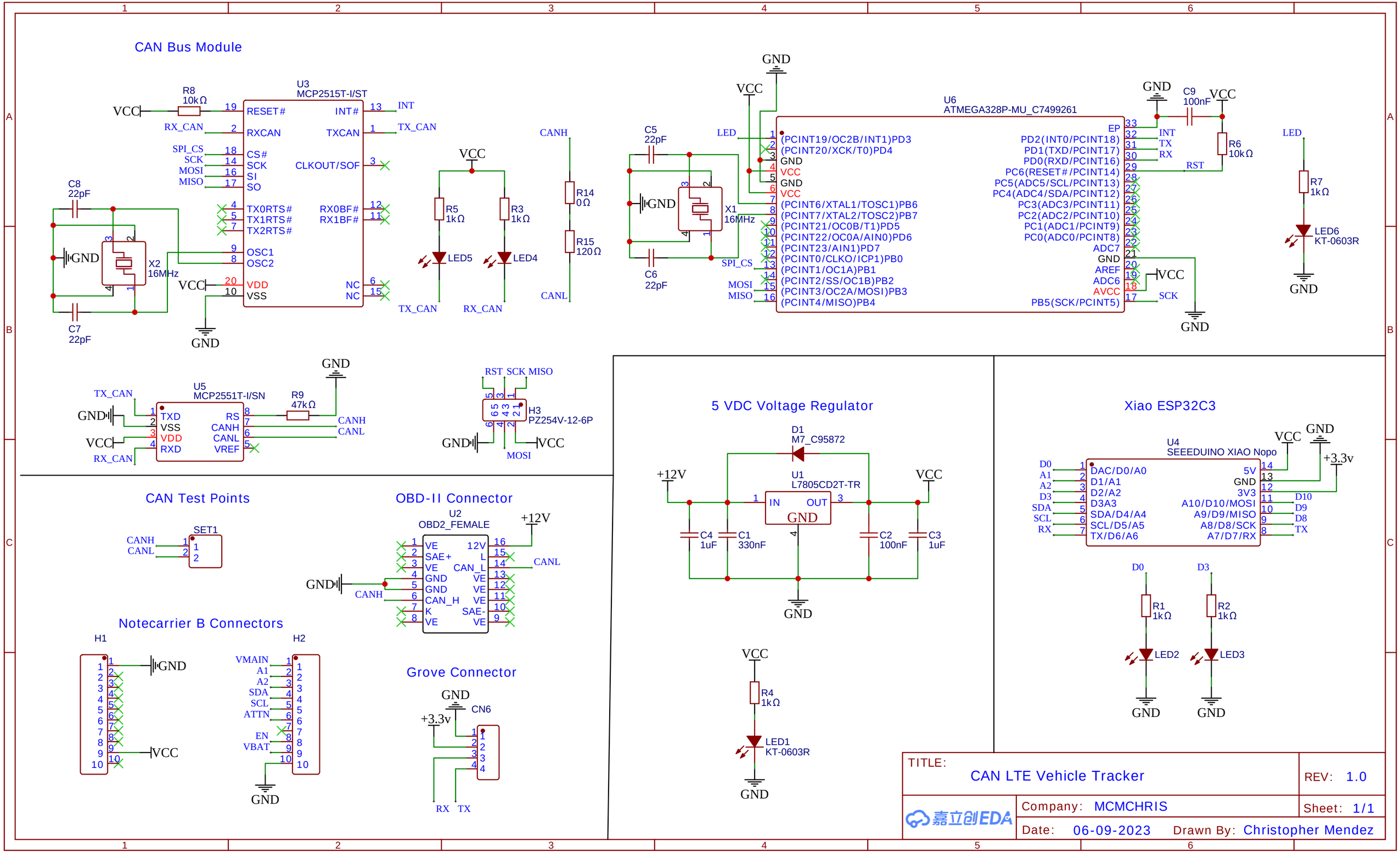
CAN Bus Module
U3
MCP2515T-I/ST
R8
10kΩ
VCC
RX_CAN
SPI_CS
SCK
MOSI
MISO
RESET#
RXCAN
CS#
SCK
SI
SO
TX0RTS#
TX1RTS#
TX2RTS#
OSC1
OSC2
VDD
VSS
INT#
TXCAN
CLKOUT/SOF
RX0BF#
RX1BF#
NC
NC
INT
TX_CAN
C8
22pF
X2
16MHz
C7
22pF
GND
R5
1kΩ
R3
1kΩ
LED5
LED4
CANH
CANL
R14
0Ω
R15
120Ω
U6
ATMEGA328P-MU_C7499261
C5
22pF
C6
22pF
X1
16MHz
LED
(PCINT19/OC2B/INT1)PD3
(PCINT20/XCK/T0)PD4
(PCINT6/XTAL1/TOSC1)PB6
(PCINT7/XTAL2/TOSC2)PB7
(PCINT21/OC0B/T1)PD5
(PCINT22/OC0A/AIN0)PD6
(PCINT23/AIN1)PD7
(PCINT0/CLKO/ICP1)PB0
(PCINT1/OC1A)PB1
(PCINT2/SS/OC1B)PB2
(PCINT3/OC2A/MOSI)PB3
(PCINT4/MISO)PB4
EP
PD2(INT0/PCINT18)
PD1(TXD/PCINT17)
PD0(RXD/PCINT16)
PC6(RESET#/PCINT14)
PC5(ADC5/SCL/PCINT13)
PC4(ADC4/SDA/PCINT12)
PC3(ADC3/PCINT11)
PC2(ADC2/PCINT10)
PC1(ADC1/PCINT9)
PC0(ADC0/PCINT8)
ADC7
AREF
ADC6
AVCC
PB5(SCK/PCINT5)
C9
100nF
R6
10kΩ
R7
1kΩ
LED6
KT-0603R
U5
MCP2551T-I/SN
TXD
VSS
VDD
RXD
RS
CANH
CANL
VREF
R9
47kΩ
H3
PZ254V-12-6P
RST SCK MISO
MOSI
5 VDC Voltage Regulator
D1
M7_C95872
+12V
U1
L7805CD2T-TR
IN
OUT
C4
1uF
C1
330nF
C2
100nF
C3
1uF
R4
1kΩ
LED1
KT-0603R
Xiao ESP32C3
U4
SEEEDUINO XIAO Nopo
+3.3v
DAC/D0/A0
D1/A1
D2/A2
D3A3
SDA/D4/A4
SCL/D5/A5
TX/D6/A6
5V
3V3
A10/D10/MOSI
A9/D9/MISO
A8/D8/SCK
A7/D7/RX
R1
1kΩ
R2
1kΩ
LED2
LED3
CAN Test Points
SET1
OBD-II Connector
U2
OBD2_FEMALE
VE
SAE+
CAN_H
K
12V
L
CAN_L
SAE-
Notecarrier B Connectors
H1
H2
VMAIN
A1
A2
SDA
SCL
ATTN
EN
VBAT
Grove Connector
CN6
RX TX
TITLE:
CAN LTE Vehicle Tracker
REV: 1.0
Company: MCMCHRIS
Sheet: 1/1
Date: 06-09-2023
Drawn By: Christopher Mendez
嘉立创EDA