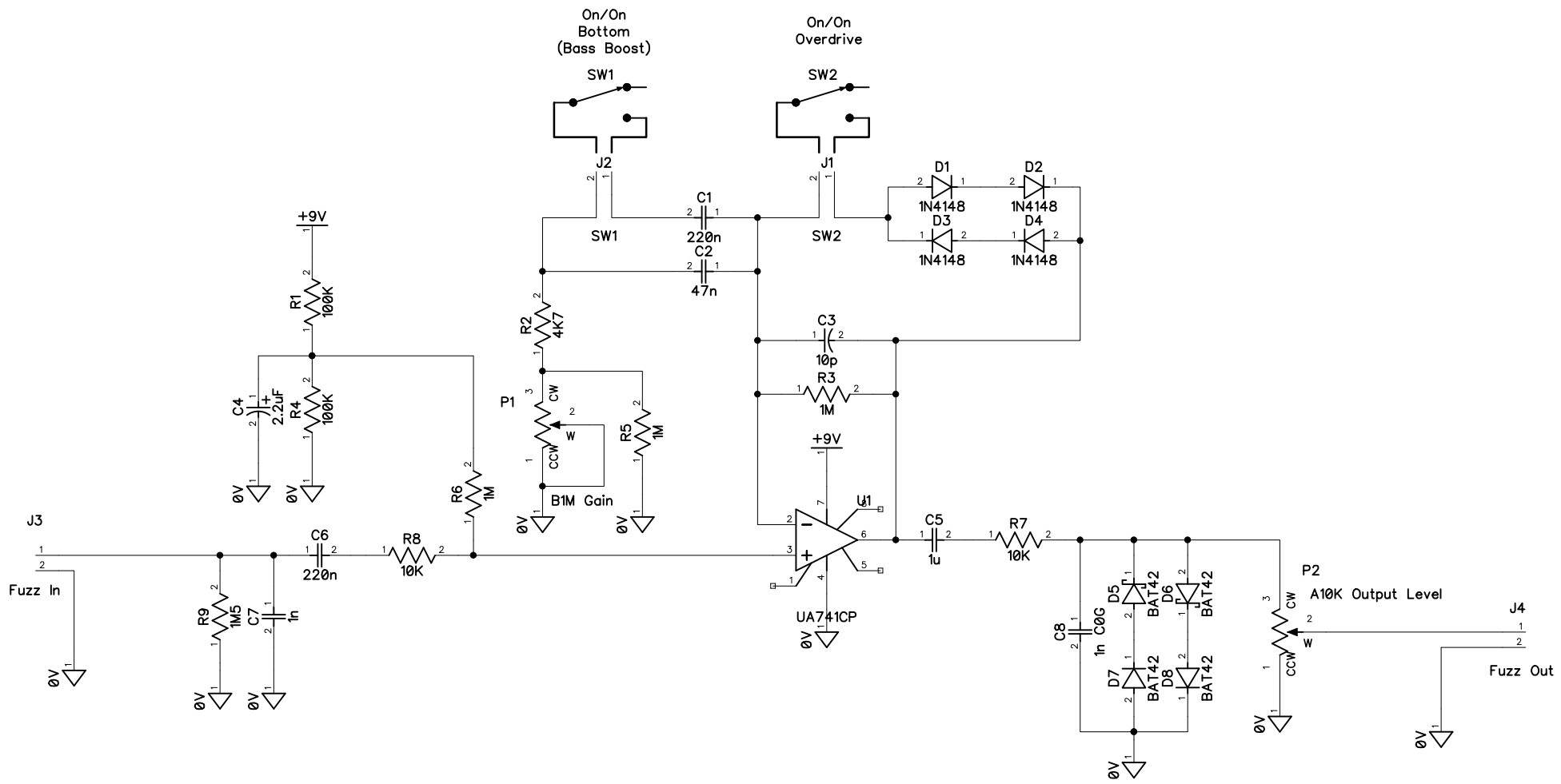
On/On
Bottom
(Bass Boost)
SW1
J2
On/On
Overdrive
SW2
J1
C1
220n
C2
47n
D1
1N4148
D2
1N4148
D3
1N4148
D4
1N4148
+9V
R1
100K
R2
4K7
C3
10p
R3
1M
C4
2.2uF
R4
100K
P1
CW
W
CCW
B1M Gain
R5
1M
R6
1M
U1
UA741CP
J3
Fuzz In
C6
220n
R8
10K
R9
1M5
C7
1n
C5
1u
R7
10K
C8
1n C0G
D5
BAT42
D6
BAT42
D7
BAT42
D8
BAT42
P2
A10K Output Level
J4
Fuzz Out
0V

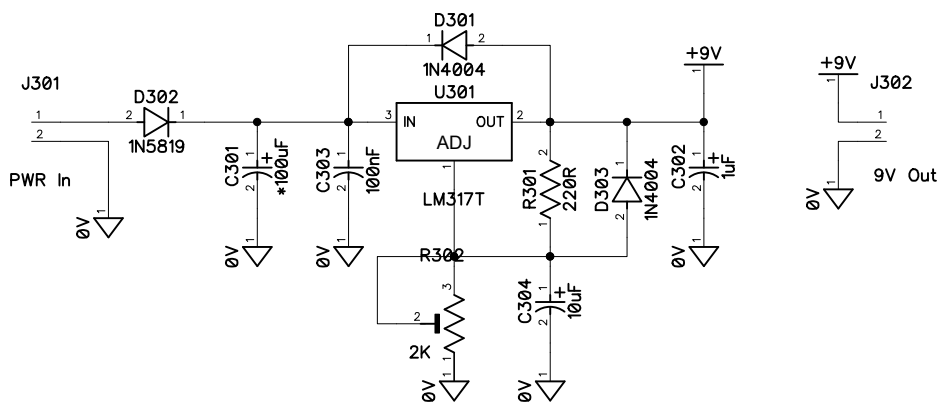
D301
1N4004
J301
D302
1N5819
PWR In
U301
IN
OUT
ADJ
LM317T
C301
*100uF
C303
100nF
R301
220R
D303
1N4004
C302
1uF
+9V
J302
9V Out
R302
2K
C304
10uF
0V

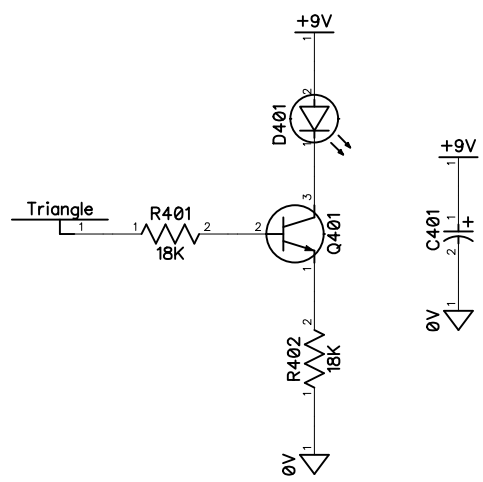
+9V
D401
Triangle
R401
18K
Q401
R402
18K
C401
0V

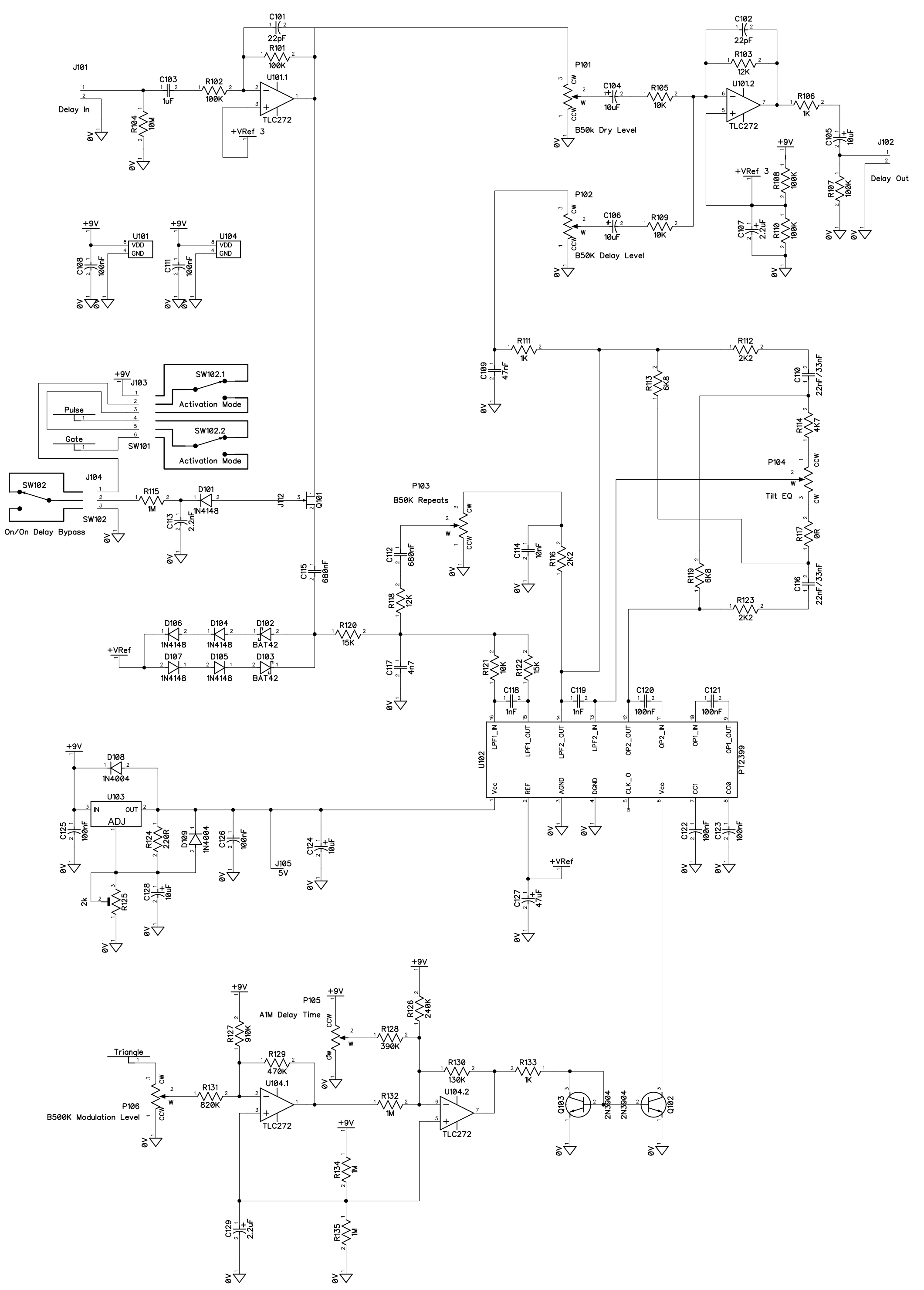
J101
Delay In
C103
1uF
R102
100K
R104
10M
C101
22pF
R101
100K
U101.1
TLC272
+VRef 3
P101
B50k Dry Level
C104
10uF
R105
10K
C102
22pF
R103
12K
U101.2
TLC272
R106
1K
C105
10uF
J102
Delay Out
R107
100K
R108
100K
R110
100K
C107
2.2uF
P102
B50K Delay Level
C106
10uF
R109
10K
U101
U104
VDD
GND
C108
100nF
C111
100nF
+9V
0V
J103
SW102.1
Activation Mode
SW102.2
Activation Mode
Pulse
Gate
SW101
J104
SW102
On/On Delay Bypass
R115
1M
D101
1N4148
C113
2.2nF
J112
Q101
C115
680nF
P103
B50K Repeats
C112
680nF
R118
12K
C114
10nF
R116
2K2
R111
1K
C109
47nF
R112
2K2
R113
6K8
C110
22nF/33nF
R114
4K7
P104
Tilt EQ
R117
0R
R119
6K8
C116
22nF/33nF
R123
2K2
D106
D104
D102
D107
D105
D103
1N4148
BAT42
+VRef
R120
15K
C117
4n7
R121
10K
R122
15K
C118
1nF
C119
1nF
C120
100nF
C121
100nF
U102
PT2399
LPF1_IN
LPF1_OUT
LPF2_OUT
LPF2_IN
OP2_OUT
OP2_IN
OP1_IN
OP1_OUT
Vcc
REF
AGND
DGND
CLK_O
Vco
CC1
CC0
C122
100nF
C123
100nF
D108
1N4004
U103
IN
OUT
ADJ
C125
100nF
R124
220R
D109
1N4004
C126
100nF
J105
5V
C124
10uF
R125
2k
C128
10uF
C127
47uF
P105
A1M Delay Time
R126
240K
R128
390K
R127
910K
R129
470K
Triangle
P106
B500K Modulation Level
R131
820K
U104.1
TLC272
R130
130K
R132
1M
U104.2
TLC272
R133
1K
Q103
2N3904
Q102
2N3904
R134
1M
R135
1M
C129
2.2uF

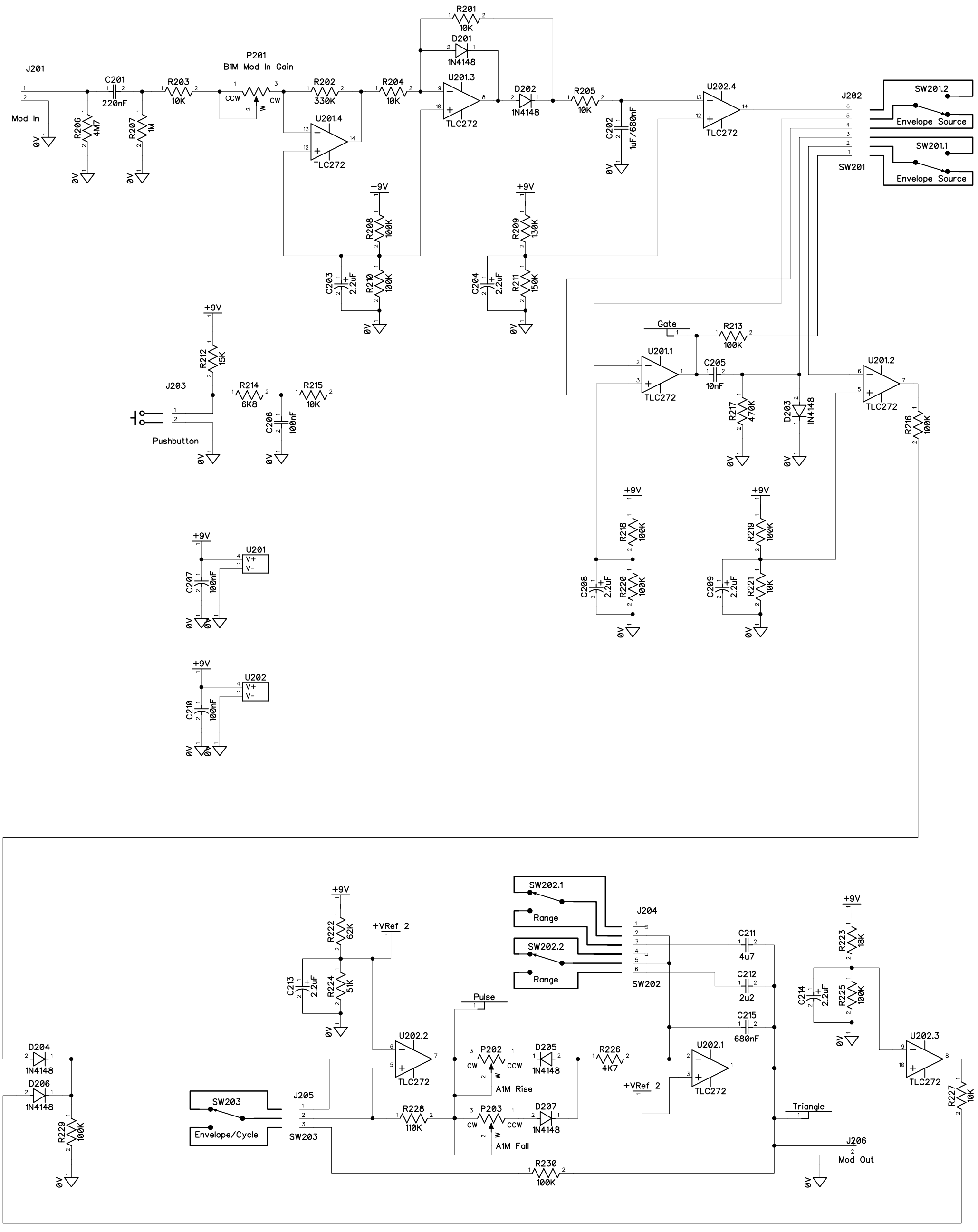
J201
Mod In
C201
220nF
R203
10K
P201
B1M Mod In Gain
CCW
CW
R202
330K
R204
10K
R201
10K
D201
1N4148
U201.3
TLC272
D202
1N4148
R205
10K
C202
1uF/680nF
U202.4
TLC272
J202
SW201.2
Envelope Source
SW201.1
Envelope Source
SW201
R206
4M7
R207
1M
U201.4
TLC272
+9V
R208
100K
R209
130K
C203
2.2uF
R210
100K
C204
2.2uF
R211
150K
0V
R212
15K
J203
R214
6K8
R215
10K
C206
100nF
Pushbutton
Gate
R213
100K
U201.1
TLC272
C205
10nF
R217
470K
D203
1N4148
U201.2
TLC272
R216
100K
R218
100K
R219
100K
C208
2.2uF
R220
100K
C209
2.2uF
R221
10K
U201
V+
V-
C207
100nF
U202
V+
V-
C210
100nF
SW202.1
Range
SW202.2
Range
J204
SW202
C211
4u7
C212
2u2
C215
680nF
R222
62K
+VRef 2
C213
2.2uF
R224
51K
Pulse
U202.2
TLC272
P202
CW
CCW
A1M Rise
D205
1N4148
R226
4K7
U202.1
TLC272
R223
18K
C214
2.2uF
R225
100K
U202.3
TLC272
R227
10K
D204
1N4148
D206
1N4148
R229
100K
SW203
Envelope/Cycle
J205
SW203
R228
110K
P203
CW
CCW
A1M Fall
D207
1N4148
Triangle
J206
Mod Out
R230
100K