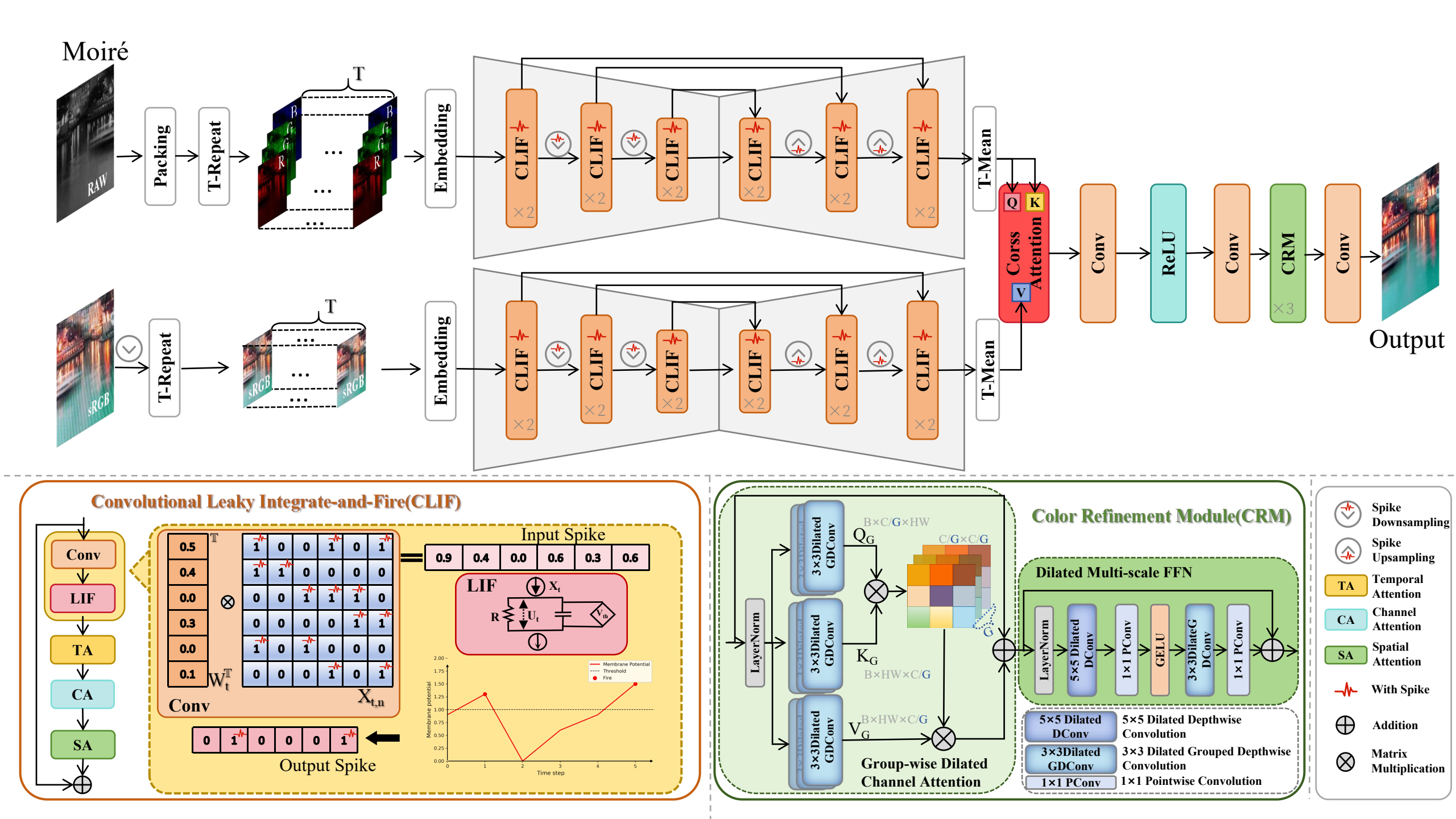
Moiré
RAW
Packing
T-Repeat
T
Embedding
CLIF
×2
T-Mean
Q
K
V
Corss Attention
Conv
ReLU
CRM
×3
Output
sRGB
Convolutional Leaky Integrate-and-Fire(CLIF)
Conv
LIF
TA
CA
SA
Input Spike
Output Spike
Membrane Potential
Threshold
Fire
Time step
Color Refinement Module(CRM)
LayerNorm
3×3Dilated GDConv
Group-wise Dilated Channel Attention
Dilated Multi-scale FFN
5×5 Dilated DConv
1×1 PConv
GELU
3×3DilateG DConv
5×5 Dilated Depthwise Convolution
3×3 Dilated Grouped Depthwise Convolution
1×1 Pointwise Convolution
Spike Downsampling
Spike Upsampling
Temporal Attention
Channel Attention
Spatial Attention
With Spike
Addition
Matrix Multiplication