KT 2

Service Manual

Manual no.: HWR.0590.015.01.en
Edition: 11/2022

Translation of the original instructions

Körber Technologies GmbH
Körber Technologies, Inc.
Körber Technologies Instruments SAS

***

Terms of copyright

This document has been written for authorized, qualified personnel. It deals with the product specified in its title and this product must be installed and operated in strict accordance with the contents of this document.

The manufacturer accepts no responsibility for any changes made to the product by the user. Before doing anything with the product, therefore, ensure that it corresponds exactly to all the relevant information and specifications contained in this document. It is in the user's interest to contact the manufacturer immediately if discrepancies are discovered or if any uncertainty exists in this respect.

The manufacturer stipulates that all relevant national, local and any other pertinent safety regulations are strictly adhered to in connection with the operation of the product or any work (adjustments, maintenance, repair etc) carried out on the product itself.

All documents, including those on data carrier, are protected by copyright. They are provided for personal information only. You are allowed to make printed copies for your own use when using in connection with the contract. Furthermore, the copying or reproduction of these documents, or any other form of provision whatsoever to third parties is not permitted. By the same token, using these documents for fabrication purposes without our consent is not permitted either.

Copyrights and exploitation rights

All software products and software documentation included in our scope of delivery are copyrighted in favour of *Körber Technologies GmbH, Kurt-A.-Körber-Chaussee 8-32, 21033 Hamburg, Tel*: *+49 40 7250-01, e-mail: info.documentation.te.ger@koerber.com, Internet: www.koerber.com (hereinafter Körber)*, or the software manufacturers from whom Körber has acquired a licence.

All copyrights and rights of exploitation are the property of Körber or of the software vendors. The Licensee shall observe the copyrights and rights of exploitation and, in particular, is not allowed to erase the notices drawing attention to copyright.

Rights of use

In consideration for payment of an agreed purchase price (or when the products are delivered at the latest) Körber grants the Licensee the non-exclusive, unlimited and non-transferable right to use the software products and their documentation in accordance with the contract within the Licensee's company.

The right to use relates to the actual scope of supply in which the software is implemented or to the contractually agreed scope of use of the software.

The Licensee is not entitled to pass on the software to third parties. The exception is the passing on of integrated software when selling complete machines provided an indication is given as to the copyrights and rights of exploitation of Körber or the software authors.

Duplicating and editing rights

Any duplication of software and documentation requires Körber's prior written consent.

The exception from this rule is the making of a backup copy, provided the Licensee adds to it the corresponding copyright notices shown in the original.

Any editing or altering of the software also requires Körber's prior written consent, unless it has been explicitly released for editing or altering. If software is processed or changed by the Licensee, any warranty claim against Körber becomes invalid.

Claims in the event of a violation of these provisions

If any of these provisions are violated, Körber reserves the right to serve notice in respect of the rights of use and to claim damages.

Licence provisions of the software suppliers

Any further provisions issued by our software suppliers will be submitted to you if applicable.

***

Subject to technical changes without notice.

Last update: 09/2022

COP.XXX.0000.051.00.en

About this manual

Persons to whom this manual applies

This manual is primarily a reference guide for qualified and trained service technicians. It contains all of the information required to set up, maintain and repair the machine safely. It supplements the drawings in the mechanical spare parts catalogue, which illustrate the design of the individual subassemblies.

Guide

The following features are provided to help you find information in the service manual:

- Table of contents.
- Information in the header and footer of every page.
- Alphabetical index at the end of the manual.
- Glossary with the explanations of abbreviations and technical terms, also contained at the end of the manual.

In addition there are also cross references (↑ ..-...) in some places to positions in the text in this handbook or to a different document.

Total scope of documentation

This service manual is a part of the machine documentation package. Further documentation includes:

- The safety manual (option if documentation is supplied on DVD only).
- The operator's manual.
- The data sheets.
- The instructions for transportation and construction.
- The electrical circuit diagram.
- The mechanical spare parts catalogue.
- The software installation instructions.
- The online help within the process visualisation system.
- If applicable, additional operating instructions (technical instructions, documentation supplied by subcontractors*).

Settings

The settings specified in the documentation are for the basic settings of the machine. These basic settings may need to be modified to suit individual operation requirements.

Information
Before starting the machine for the first time and before starting any maintenance and repair work, make absolutely sure you have read the safety instructions in the operator's manual or the safety manual.

Options

This manual also describes equipment which may differ from the equipment actually fitted on your machine. These descriptions are identified by the words option or optional. These can either be chargeable options or design-dependent equipment without any additional costs.

No claims may be derived from the information, illustrations and descriptions herein.

*** Documentation from sub-contractors**

For further information on individual equipment from subcontractors, go to the relevant supplier’s home page and call up the appropriate documentation for the equipment. The exact designation of the equipment can be found by referring to the circuit diagrams or the equipment itself.

1 Set-up 1-1
1.1 Overview of set-up tasks 1-1
1.2 General settings 1-4
1.2.1 Setting proximity switches 1-4
1.2.1.1 Setting the proximity switch (-B13 / -BG13) 1-4
1.2.1.2 Setting the proximity switch (-B14 / -BG14) 1-7
1.2.2 Setting the sensor (-B16 / -BG16) 1-8
1.2.3 Setting the sensor (-B17 / -BG17) 1-9
1.2.4 Setting the ultrasonic proximity switch (-B19 / -BG19) 1-11
1.2.4.1 Assigning sensor parameters 1-12
1.2.5 Setting compressed air consumption data recording (-B154 / -BF154) (optional) 1-13

2 Maintenance and cleaning 2-1
2.1 Performing maintenance work 2-2
2.2 Performing cleaning work 2-2
2.3 Maintenance and cleaning schedule 2-3
2.4 Cutting width measurement 2-8
2.5 Lubricants 2-9
2.5.1 Oils 2-10
2.5.1.1 Oil for gear motors M3/MA3 and M4/MA4 2-10
2.5.1.2 Oil for roller chains (triplex) 2-10
2.5.2 Greases 2-10
2.5.2.1 Grease for grinder unit 2-10
2.5.2.2 Grease for knife drum 2-11
2.5.2.3 Grease for conveyor chains 2-11
2.6 Thread-locking fluid 2-11

3 Subassemblies 3-1
3.1 General information 3-1
3.2 Completing the machine by adding a tobacco feed unit 3-3
3.2.1 SRB compacting trough 3-3
3.2.1.1 Compacting trough control (optional) 3-3
3.2.1.2 Maintenance 3-4
3.3 Conveyor chains 3-4
3.3.1 Set-up work (conveyor chains) 3-5
3.3.1.1 Setting the scraper on the lower conveyor chain 3-5
3.3.1.2 Roller chains - checking the tension and retensioning 3-6
3.3.1.3 Conveyor chains - checking sag and tensioning 3-8
3.3.2 Maintenance work (conveyor chain) 3-12
3.3.2.1 Wear limits for chain links and sliding plates 3-12
3.3.2.2 Removing the upper and lower conveyor chains 3-13
3.3.2.3 Fitting the conveyor chain wheel 3-18

3.3.2.4 Fitting the conveyor chain 3-20
3.3.2.5 Follow-up work 3-23
3.3.2.6 Oil change: conveyor chain drives (motors M3 and M4). 3-24
3.3.2.7 Replacing the flanged wheels 3-26
3.3.3 Cleaning. 3-27
3.3.3.1 Standard cleaning of the conveyor chains 3-27
3.3.3.2 Cleaning the conveyor chains off the machine 3-28
3.4 Knife drum 3-29
3.4.1 Setting 3-30
3.4.1.1 Knife adjustment 3-30
3.4.1.2 Setting the knife advance 3-31
3.4.1.3 Changing the knife advance gear unit 3-33
3.4.2 Knife drum: set-up tasks 3-36
3.4.2.1 Setting the bearing play of the knife drum 3-36
3.4.2.2 Operation with 2 or 4 knives 3-37
3.4.3 Knife drum: maintenance work 3-41
3.4.3.1 Checking and tensioning the V-belts/toothed belt. 3-41
3.4.3.2 Belt replacement 3-43
3.4.3.3 Replacing the knives 3-44
3.4.3.4 Lubricating the ball joint on the knife advance unit 3-46
3.4.3.5 Cleaning the sliding plate at the tobacco discharge point. 3-47
3.4.3.6 Checking the knife drum holding brake. 3-47
3.4.3.7 Knife advance gear unit maintenance. 3-47
3.4.3.8 Cleaning the gaps between the knife drum and the cutter head frame 3-48
3.5 Grinder unit. 3-49
3.5.1 Setting 3-50
3.5.1.1 Checking and setting grinding wheel advance 3-50
3.5.1.2 Setting the grinding profile 3-52
3.5.1.3 Adjusting the carriage guide 3-54
3.5.1.4 Setting the advance shaft brake 3-55
3.5.2 Maintenance 3-56
3.5.2.1 Replacing the grinding wheel 3-56
3.5.2.2 Replacing the dressing diamond. 3-58
3.5.2.3 Adjusting the dressing diamond (when the bottom knife bar is worn) 3-59
3.5.2.4 Adjusting the dressing diamond (when the bottom knife bar is replaced) 3-60
3.5.2.5 Retensioning the tension spring on the lever of the diamond holder 3-62
3.5.2.6 Retensioning the tension spring on the steel belt 3-63
3.5.2.7 Fitting the angular-contact ball bearings on the grinding wheel drive 3-64
3.5.2.8 Regreasing the grinding carriage bushes 3-66
3.5.2.9 Retensioning the grinder unit chain drive 3-67
3.5.2.10 Readjusting the grinder unit limiting points 3-68
3.5.2.11 Cleaning the brass cover on the grinder unit 3-69

3.5.2.12 Daily cleaning of the steel belts . . . 3-69
3.5.2.13 Monthly cleaning of the steel belts . . . 3-72
3.5.2.14 Cleaning the dustbin for the grinder unit . . . 3-73
3.6 Mouthpiece . . . 3-74
3.6.1 Mouthpiece: set-up tasks . . . 3-75
3.6.1.1 Setting the mouthpiece . . . 3-75
3.6.2 Mouthpiece: maintenance work . . . 3-77
3.6.2.1 Removing and fitting the mouthpiece . . . 3-77
3.6.2.2 Replacing the wedge rail on the mouthpiece top section . . . 3-78
3.6.2.3 Replacing the bottom knife bar . . . 3-79
3.7 Movable discharging element (optional) . . . 3-80
3.7.1 Removing the discharging element . . . 3-81
3.8 Compressed air system . . . 3-82
3.8.1 Settings . . . 3-82
3.8.2 Compressed air system: maintenance work . . . 3-83
3.9 Compacting belt (KT 2 - L125 only) . . . 3-83
3.9.1 Set-up task (compacting belt) . . . 3-83
3.9.1.1 Setting the height of the compacting belt . . . 3-83
3.9.2 Maintenance work (compacting belt) . . . 3-84
3.9.2.1 Removing and fitting the compacting belt (subassembly) . . . 3-84
3.9.2.2 Tensioning the drive chain . . . 3-85
3.9.2.3 Checking/correcting belt run and belt tension . . . 3-86
3.9.2.4 Replacing the belt . . . 3-88
3.10 Pre-compactor unit (KT 2 - L160 only) . . . 3-89
3.10.1 Set-up tasks (pre-compactor) . . . 3-90
3.10.1.1 Setting the height of the upper cassette . . . 3-90
3.10.1.2 Setting the scrapers . . . 3-91
3.10.2 Maintenance work (pre-compactor) . . . 3-92
3.10.2.1 Tensioning / replacing the drive chain . . . 3-92
3.10.2.2 Replacing the cassettes . . . 3-93
3.10.2.3 Cleaning the belt . . . 3-94
3.10.2.4 Checking belt run . . . 3-96
3.10.2.5 Correcting belt run and belt tension . . . 3-97
3.10.2.6 Replacing the belt . . . 3-98
3.10.2.7 Checking and setting transfer between pre-compactor and tobacco cutter . . . 3-99
3.11 Cleaning the viewing windows . . . 3-99
3.12 Options . . . 3-100
3.12.1 Individual dust extraction system (optional) . . . 3-100
3.12.2 Chain dust extraction (optional) . . . 3-101
3.12.2.1 Emptying the dust drawer on the industrial dust extractor . . . 3-102
3.13 Cooling system . . . 3-105

A Glossary . . . A-i

B **Index**. . . . . **B-i**

1 Set-up

Information

- The settings given in this manual are for performing the basic settings on the machine. These basic settings may need to be modified to suit your individual production requirements.
- Some of the settings listed are not absolutely essential. Not all settings listed are absolutely necessary. Use the documentation to decide which settings are necessary and when.
- A description of set-up mode is given in the Operating Manual (HBD.0590.xxx.xx).
- For details about setting work for optional equipment such as:
  - cooling unit,
  - individual dust extraction system,
  - compacting trough and
  - chain dust extraction system

  refer to the documentation supplied for this equipment.

Information
When commissioning or after a general overhaul, the parameters must be checked via the operator unit (see Visualization Manual HSW.0590.xxx.xx).

1.1 Overview of set-up tasks

All of the settings listed below must be checked at regular intervals and must be made again if necessary.

Machine section / functional unit	Type of setting	Settings or cross-reference / page
General	Set proximity switches and measuring sensors	(↑ 1-4)
Compressed air system	Check filter cartridge	(↑ 3-83)
Knife drum	Knife adjustment	(↑ 3-30)
	Set knife advance	(↑ 3-31)

Machine section / functional unit	Type of setting	Settings or cross-reference / page
Knife drum	Set bearing play of knife drum	(↑ 3-36)
	Check and tension V-belt / toothed belt	(↑ 3-41)
	Replace V-belt / toothed belt	(↑ 3-43)
	Replace knives	(↑ 3-44)
	Lubricate ball joint on knife advance unit	(↑ 3-46)
	Clean sliding plate at tobacco discharge point	(↑ 3-47)
	Check knife drum holding brake	(↑ 3-47)
Grinder unit	Set grinding wheel advance	(↑ 3-50)
	Set grinding profile	(↑ 3-52)
	Adjust carriage guide	(↑ 3-54)
	Set advance shaft brake	(↑ 3-55)
	Replace grinding wheel	(↑ 3-56)
	Replace dressing diamond	(↑ 3-58)
	Adjust dressing diamond (when bottom knife bar is worn)	(↑ 3-59)
	Adjust dressing diamond (when bottom knife bar is replaced)	(↑ 3-60)
	Retension tension springs • On the lever of the diamond holder • on the steel belt	 (↑ 3-62) (↑ 3-63)
	Fit angular-contact ball bearings	(↑ 3-64)
	Regrease grinding carriage bushes	(↑ 3-66)
	Retension grinder unit chain drive	(↑ 3-67)
	Readjust the grinder unit limiting points	(↑ 3-68)
	Clean brass cover on grinder unit	(↑ 3-69)
	Clean steel belts on grinding carriage	(↑ 3-69)
	Clean dustbin for grinder unit	(↑ 3-73)
Mouthpiece	Fit and remove mouthpiece	(↑ 3-77)
	Adjust mouthpiece	(↑ 3-75)
	Replace wedge rail	(↑ 3-78)
	Replace bottom knife bar	(↑ 3-79)

Machine section / functional unit	Type of setting	Settings or cross-reference / page
Conveyor chains	Tension roller chains	(↑ 3-6)
	Tension conveyor chains	(↑ 3-8)
	Set scrapers	(↑ 3-5)
	Remove conveyor chains	(↑ 3-13)
	Clean conveyor chains	(↑ 3-27), (↑ 3-28)
	Fit lower conveyor chain	(↑ 3-20)
	Fit upper conveyor chain	(↑ 3-22)
	Change oil in gear motor	(↑ 3-24)
	Replace flanged wheels	(↑ 3-26)
Compacting belt (optional)	Set height of compacting belt	(↑ 3-83)
	Remove and fit compacting belt	(↑ 3-84)
	Tension chain	(↑ 3-85)
	Check/correct belt run and belt tension	(↑ 3-86)
	Replace belt	(↑ 3-88)
Pre-compactor (optional)	Set height of upper cassette	(↑ 3-90)
	Set scrapers	(↑ 3-91)
	Tension / replace drive chain	(↑ 3-92)
	Remove and fit cassettes	(↑ 3-93)
	Clean belt	(↑ 3-94)
	Check belt run	(↑ 3-96)
	Correct belt run and belt tension	(↑ 3-97)
	Replace belt	(↑ 3-98)
Individual dust extraction system (optional)	Replace fabric insert	(↑ 3-100)
	Clean fabric insert (see manufacturer's operating instructions)	
Chain dust extraction system (optional)	Wash out filter of industrial dust extractor	(↑ 3-103)
Cutting width measurement	Check the actual tobacco cutting width	(↑ 2-8)

Information
When carrying out setting and maintenance work always be sure to observe the documentation supplied by the relevant manufacturer.

1.2 General settings

1.2.1 Setting proximity switches

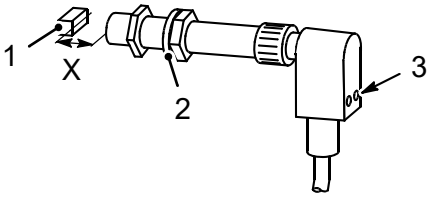

Fig. 1 Example of a proximity switch (1133HWR.z.00001.00.cgm)

Fitting

Some proximity switches may only be fitted with serrated lock-washers *(Fig. 1-2)*. Do not tighten the ring nuts too firmly, because the proximity switch might be deformed and destroyed. Only hand-tighten them at first, then turn 1/6 of a turn further with an open end spanner.

Sensing distance

Gap *(Fig. 1-X)* between the active sensing surface of the proximity switch and the actuator *(Fig. 1-1)* should generally be **1 - 2 mm**.

Function check

When you hold a screwdriver to the sensing surface, the level indicator lamp *(Fig. 1-3)* for the proximity switch should light up.

1.2.1.1 Setting the proximity switch (-B13 / -BG13)

Proximity switch (-B13 / -BG13) starts the knife length measurement.

Nominal sensing distance = 2 mm

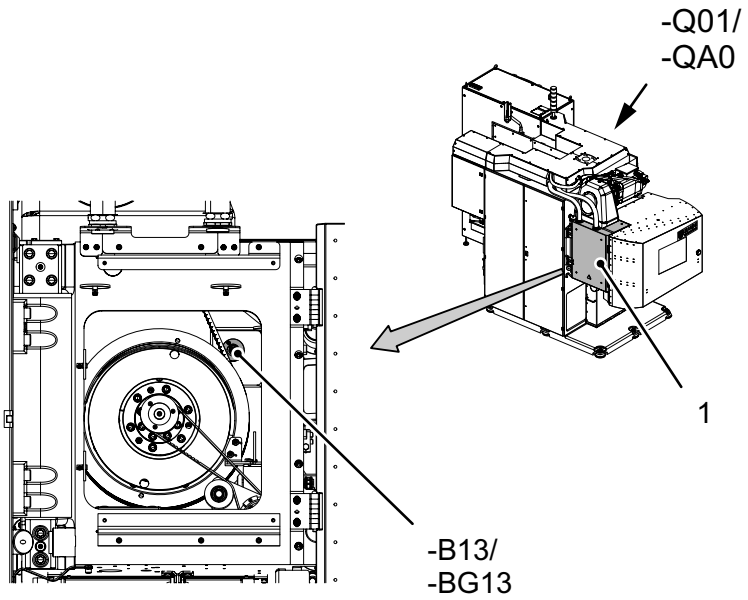

Fig. 2 *(0592_K010HWR.z.00008.00.svg)*

Information
Always use a serrated lock-washer when fitting the proximity switch (-B13 / -BG13). Do not tighten the ring nuts too firmly, because the proximity switch might be deformed and destroyed. Only hand-tighten them at first, then turn 1/6 of a turn further with an open end spanner.

Alternatively, tighten the ring nut to a torque of 10 Nm.

⚠ WARNING

Risk of injury presented by sharp knives
You could cut yourself.

Always wear cut resistant gloves (cut resistance level 5) and protective footwear when working on the knives of the knife drum.

Prerequisites

✓ Before the proximity switch *(Fig. 2-B13 / BG13)* can be set, the guards on the cutter head and the knife which activates the actuator must be removed.

Procedure

1. Open the cutter head hood.
2. Switch off the main switch *(Fig. 2-Q01 / QA0)* and padlock it to prevent it from being switched on again.
3. Open the side guard *(Fig. 2-1)* for the knife drum drive belts.

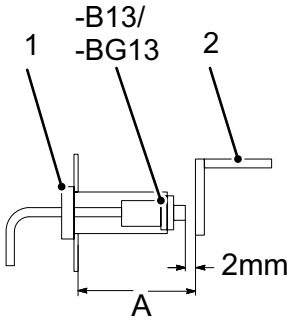

Fig. 3 *(0592_K010HWR.z.00002.01.svg)*

4. Remove sleeve *(Fig. 3-1)* and proximity switch *(Fig. 3-B13 / BG13)*.
5. Turn on the main switch *(Fig. 2-Q01 / QA0)*.
6. Hand-turn the knife drum.
7. Observe the knife drum through the fixing hole of (-B13 / -BG13) (you will need a torch). Turn the knife drum until you see that the actuator *(Fig. 3-2)* is centred in front of the fixing hole of (-B13 / -BG13).

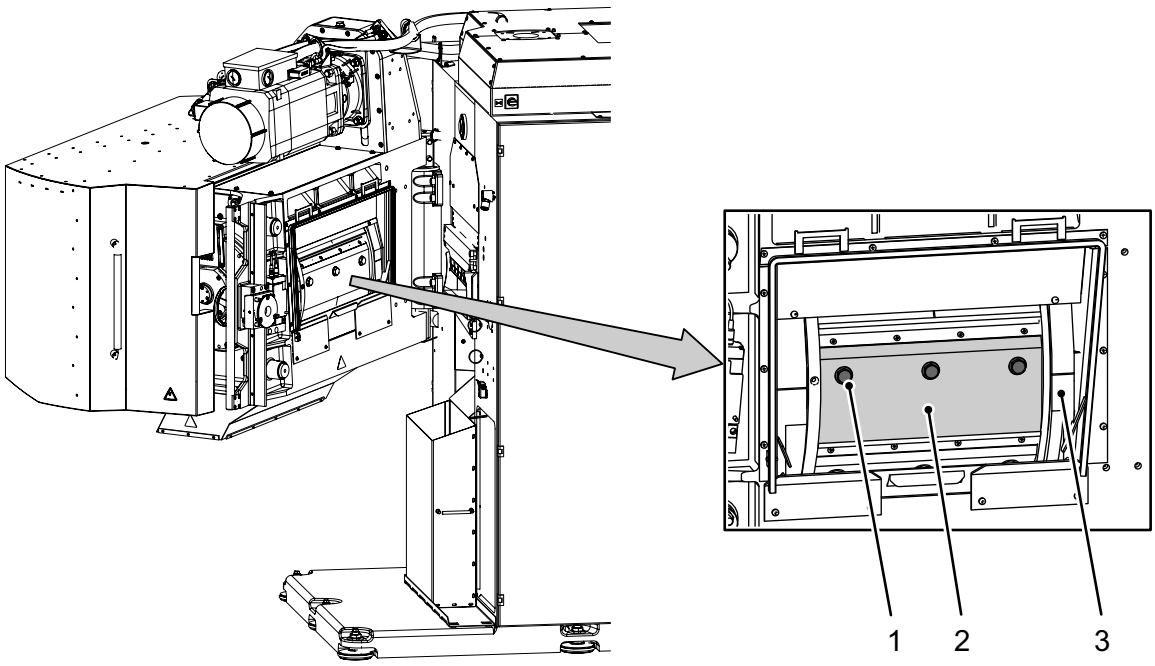

Fig. 4 *(0592_K010HWR.z.00009.00.svg)*

8. Block the knife drum *(Fig. 4-3)* (↑ 3-29).
9. Remove the knife that activates the actuator *(Fig. 3-2)*. To do so, release the screws *(Fig. 4-1)*, remove the cover plate *(Fig. 4-2)* and the knife. The actuator is in front of the fixing hole of (-B13 / -BG13).
10. Using a depth gauge, measure the gap *(Fig. 3-A)* between housing wall and actuator through the fixing hole.
11. Fit the proximity switch *(Fig. 3-B13 / BG13)* in the sleeve *(Fig. 3-1)*. Installation depth: gap *(Fig. 3-A)* minus 2 mm.

12. Fit the sleeve with (-B13 / -BG13).
13. Release the knife drum (↑ 3-29).
14. Slowly hand-turn the knife drum and make sure that the actuator *(Fig. 3-2)* does not touch the proximity switch *(Fig. 3-B13 / BG13)*.
15. Slowly hand-turn the knife drum until the actuator covers the proximity switch.
16. Open the left-hand side panel doors.
17. The local peripherals are located in the switch box (-A301 / AA301). Input -I202.5: the LED is lit when the proximity switch is correctly adjusted in relation to the actuator.
18. Turn off the main switch *(Fig. 2-Q01 / QA0)*.
19. Refit the knife and fit the cover plate *(Fig. 4-2)*.
20. Refit all guards and close the hood again.

1.2.1.2 Setting the proximity switch (-B14 / -BG14)

The proximity switch (-B14 / -BG14) measures the knife advance.

Nominal sensing distance = 1 mm

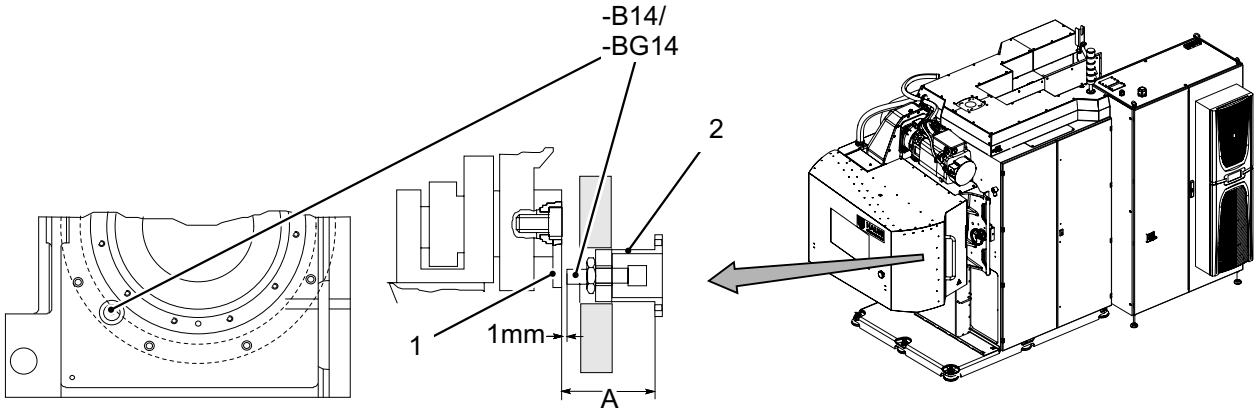

Fig. 5 *(0592_K010HWR.z.00010.00.svg)*

Information
Always use a serrated lock-washer when fitting the proximity switch (-B14 / -BG14). Do not tighten the ring nuts too firmly, because the proximity switch might be deformed and destroyed. Only hand-tighten them at first, then turn 1/6 of a turn further with an open end spanner.

Alternatively, tighten the ring nut to a torque of 10 Nm.

⚠ WARNING

Risk of injury presented by sharp knives
You could cut yourself.

Always wear cut resistant gloves (cut resistance level 5) and protective footwear when working on the knives of the knife drum.

Procedure

1. Open the cutter head hood.
2. Switch off the main switch -Q01 / -QA0 on the switch cabinet and padlock it to prevent it being switched on again.
3. Remove the sleeve with proximity switch *(Fig. 5-B14)*.
4. Switch on main switch -Q01 / -QA0.
5. Hand-turn the knife drum.
6. Observe the knife drum through the fixing hole of *(Fig. 5-B14 / BG14)* (you will need a torch).
7. Turn the knife drum until you see that the actuator is centred in front of the fixing hole of *(Fig. 5-B14 / BG14)*.
8. Using a depth gauge, measure the gap *(Fig. 5-A)* between housing wall and actuator through the fixing hole.
9. Fit the proximity switch in the sleeve *(Fig. 5-2)*. Installation depth: gap (A) minus 1 mm.
10. Fit the sleeve *(Fig. 5-2)* with (-B14 / -BG14).
11. Slowly hand-turn the knife drum and make sure that the actuator does not touch the proximity switch *(Fig. 5-B14 / BG14)*.
12. Slowly hand-turn the knife drum until the actuator *(Fig. 5-1)* covers the proximity switch *(Fig. 5-B14 / BG14)*.
13. Open the left-hand side panel doors.
14. The local peripherals are located in the switch box (-A301 / -AA301). Input -I1202.6: the LED is lit when the proximity switch *(Fig. 5-B14 / BG14)* is correctly adjusted in relation to the actuator.
15. Switch off main switch -Q01 / -QA0.
16. Refit all guards and close the hood again.

1.2.2 Setting the sensor (-B16 / -BG16)

The sensor (-B16 / -BG16) measures the mouthpiece height.

Measuring stroke = 80 mm

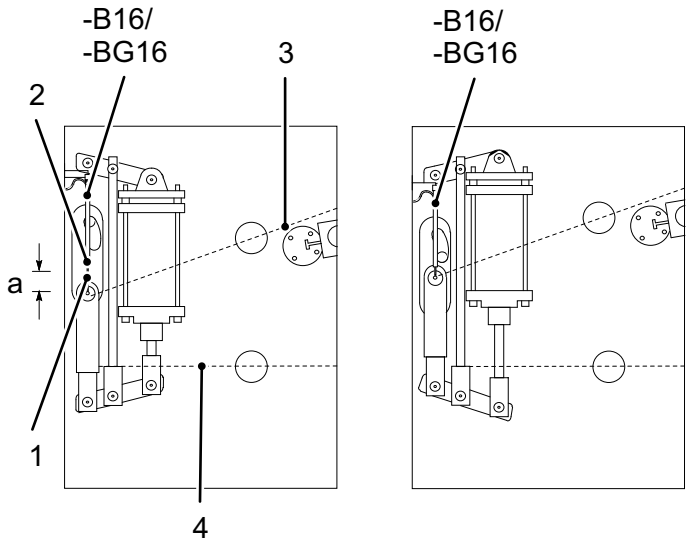

Fig. 6 3: Upper conveyor chain 4: Lower conveyor chain

(0592_K010HWR.z.00011.00.svg)

Procedure

1. Call up the CONTROL PANEL screen on the operator unit, switch on the compressed air system and preselect MANUAL mode.

Information
Please refer to the Visualization Manual (HSW.0590.xxx.xx) for further details.

2. Call up the screen for compacting unit manual mode and set the mouthpiece height to the minimum value.
3. Open the left-hand side panel doors (the mouthpiece height value continues to be displayed).
4. Make the adjustment, release the nut *(Fig. 6-2)* and then move the rod *(Fig. 6-1)*.
5. Move the sensor (-B16 / -BG16) to set the value for the mouthpiece height displayed to the following value:
   – L/S 80 = 20 mm
   – L/S 125 = 65 mm
   – L/S 160 = 100 mm
6. Secure the setting by tightening the nut *(Fig. 6-2)*.

1.2.3 Setting the sensor (-B17 / -BG17)

Sensor (-B17 / -BG17) measures the grinding wheel length (cup wheel length).

Measuring stroke = 100 mm, effective measuring stroke = 77 mm

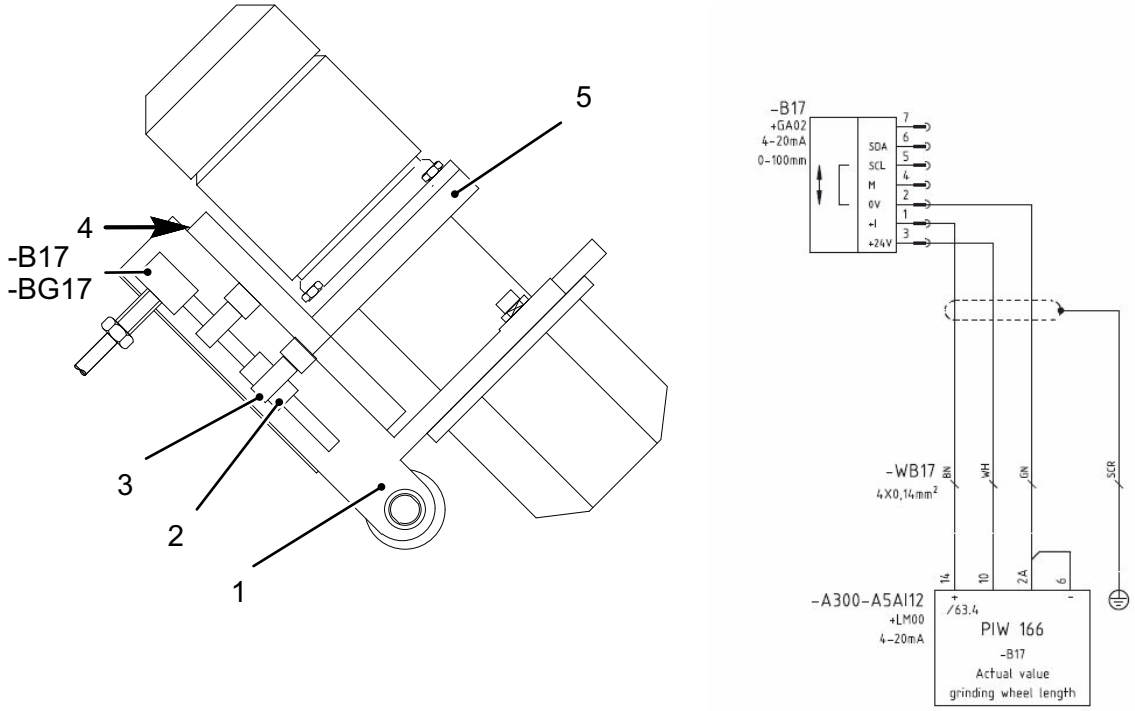

Fig. 7 *(0592_K010HWR.z.00012.00.svg)*

Procedure

1. Remove the grinding wheel together with the mounting flange (see HWR, chapter entitled "Replacing the grinding wheel").(↑ 3-56)
2. Move the grinding carriage *(Fig. 7-5)* to the initial position: to do so, place an a/f 19 socket wrench or cordless screwdriver on the advance shaft of the cup wheel and move the grinding carriage *(Fig. 7-5)* until it is flush with the mark *(Fig. 7-4)* on the spindle block *(Fig. 7-1)* (marks the initial position).
3. Connect an ammeter: open the doors at the left-hand side panel. At the local peripherals, disconnect the wire from (-A300-A5AI12, terminal 14) and connect the ammeter.
4. Calibrate the initial position: disconnect the measuring sleeve *(Fig. 7-2)* from the assembly block *(Fig. 7-3)* and shift it until the ammeter reads **7.12 mA**, which indicates that the measuring sleeve *(Fig. 7-2)* is in its initial position. Screw the measuring sleeve to the holder. The touch panel displays grinding wheel length = 128 mm (length of grinding wheel, including flange).
5. Calibrate the final position: shift the grinding carriage *(Fig. 7-5)* by 74 mm until the ammeter reads **18.96 mA**, which indicates that the end of the advance stroke has been reached and the measuring sleeve *(Fig. 7-2)* is in its final position. The touch panel displays grinding wheel length = 54 mm. In this position, the "Change grinding wheel" message is displayed.
6. Finish the calibration, disconnect the ammeter.
7. Set the home position: move the grinding carriage *(Fig. 7-5)* 80 mm back. The touch panel displays grinding wheel length = 134 mm.

8. Fit the grinding wheel together with the mounting flange (see HWR, chapter "Replacing the grinding wheel").(↑ 3-56)

1.2.4 Setting the ultrasonic proximity switch (-B19 / -BG19)

The ultrasonic proximity switch (-B19 / -BG19) measures the tobacco height on the lower conveyor chain.

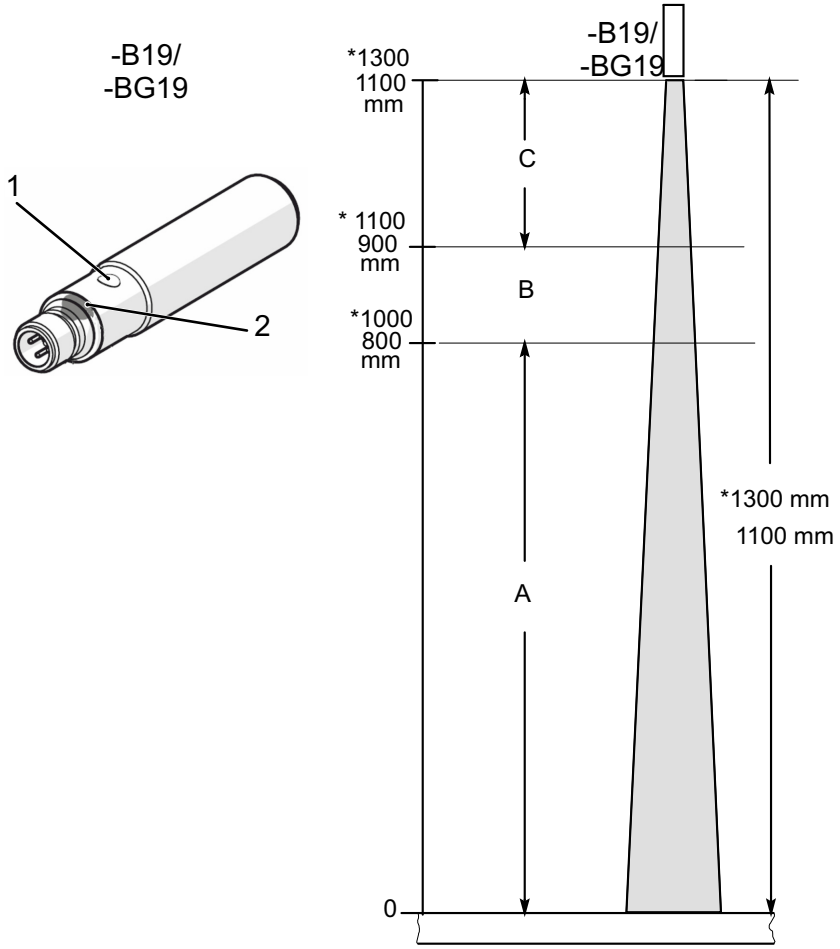

Fig. 8 *(0590_initi.z.00008.01.svg)*

* = values for KT 2-L160

Without asterisk = values for KT 2-L/S 80, -L/S125, -S160

Explanation of illustration

- *(Fig. 8-1)* Teach button
- *(Fig. 8-2)* LED
- *(Fig. 8-A)* Operating range (admissible measuring range)
- *(Fig. 8-B)* Limit range (still admissible measuring range)
- *(Fig. 8-C)* Blind zone (inadmissible measuring range)

Installation height

The height of the sound emission opening above the lower conveyor chain must be:

- 1100 mm for KT 2-L/S 80, -L/S125, -S160

- 1300 mm for KT 2-L160

A max. inclination of 5 - 10° is permitted.

Operating range *(Fig. 8-A)*

The operating range is the admissible measuring range. In this range, an analog 4 - 20 mA signal is issued in proportion to the tobacco height; the LED is lit. The operating range is:

- 0 - 800 mm for KT 2-L/S 80, -L/S125, -S160.
- 0 - 1000 mm for KT 2-L160.

Limit range *(Fig. 8-B)*

The limit range is a range within the admissible measuring range, where measured value deviations will occur. In this area a constant 20 mA signal is generated; the LED is dark. The limit range is:

- 800 - 900 mm for KT 2-L/S 80, -L/S125, -S160.
- 1000 - 1100 mm for KT 2-L160.

Blind zone *(Fig. 8-C)*

The blind zone is the range immediately behind the sound emission opening. The signal generated in this range cannot be used. The analog signal changes to 4 mA; the LED is dark. The blind zone is:

- 900 - 1100 mm for KT 2-L/S 80, -L/S125, -S160.
- 1100 - 1300 mm for KT 2-L160

1.2.4.1 Assigning sensor parameters

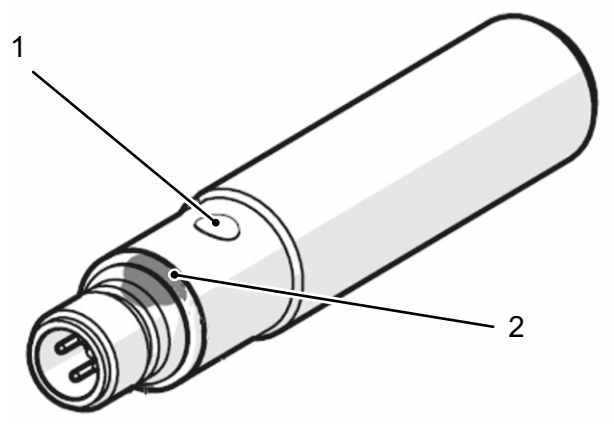

Fig. 9 Schematic diagram of the sensor *(059x_Init_B19.z.00000.01.svg)*

Prerequisites

✓ The tobacco cutter is switched on.
✓ The cable in the plug was rewired.
✓ The sensor has been fitted in the intended position.

Procedure

1. Start programming mode:
   To do so, press the teach button *(Fig. 9-1)* for 2 to 6 s.
   The yellow status LED *(Fig. 9-2)* flashes slowly (1 Hz) to indicate that programming mode is active.

2. Set the position of the lower conveyor chain:

   To do so, press the teach button *(Fig. 9-1)* for 1 s.

   The yellow status LED *(Fig. 9-2)* flashes at a medium rate (2.5 Hz) to indicate that setting the position is complete.

3. Set the sensor's working range:

   For this purpose attach an object (e.g. cardboard) between the lower conveyor chain and the sensor. The necessary distance between the object and the conveyor chain depends on the cutter type:

Type	L80	L125	L160	S80	S125	S160
Distance [mm]	800	800	1000	800	800	800

   Then press the teach button *(Fig. 9-1)* for 1 s.

   The yellow status LED *(Fig. 9-2)* flashes at a fast rate (4 Hz) to indicate that setting the position is complete.

4. To invert the output behaviour:

   To do so, press the teach button *(Fig. 9-1)* for at least 6 s.

   The yellow status LED *(Fig. 9-2)* flashes (>10 Hz) and then flashes briefly (>4 Hz) to indicate that the output function has been inverted.

5. After completing the setting wait 10 s until the sensor has changed from programming mode into operative mode. Check the height using the values displayed on the operator unit.

1.2.5 Setting compressed air consumption data recording (-B154 / -BF154) (optional)

The consumption data sensor (-B154 / -BF154) is used to register the compressed air consumption of the machine.

The sensor has an analog output via which the current compressed air consumption is indicated in l/min. A digital output also gives a pulse used to transfer the consumption to the control system. The consumption values are displayed on the operator unit (see Visualization Manual HSW.0590.xxx.xx).

⚠ WARNING

Compressed air!
Compressed air is applied to the machine. Work on the compressed air system can therefore result in injuries and damage to machinery.

- Only trained personnel are allowed to make the setting.
- Turn off the main switch for the compressed air system.

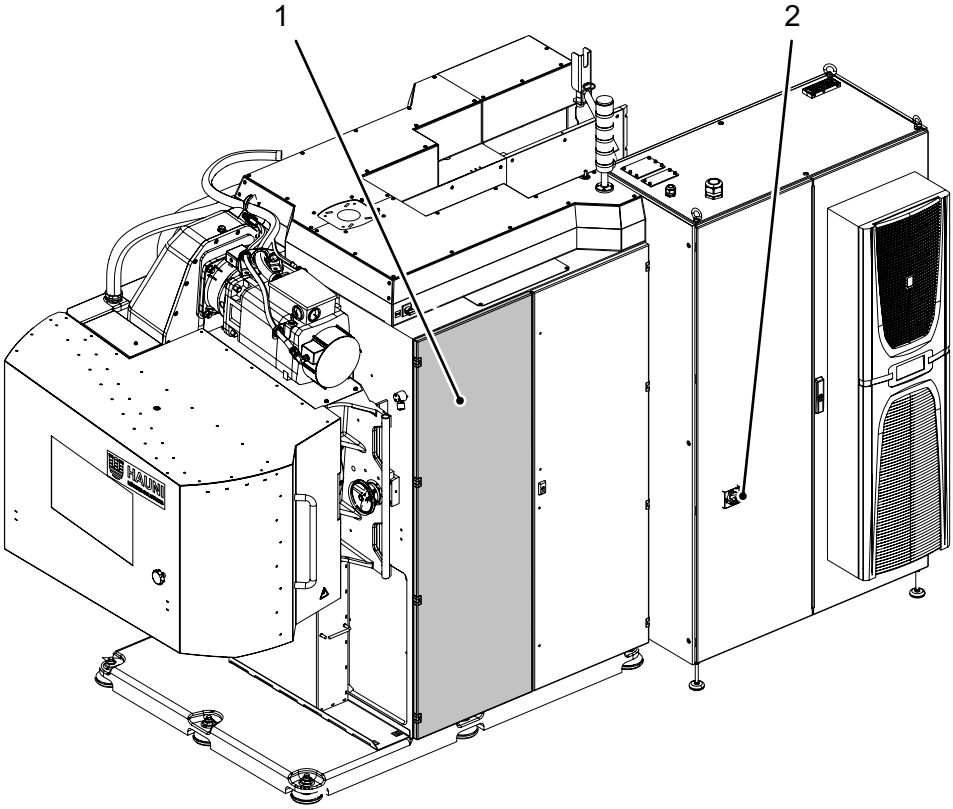

Fig. 10 Air volume measuring unit (0592_K010HWR.z.00013.00.svg)

Procedure

1. Turn on the main switch (-Q01 / -QA0) *(Fig. 10-2)*.
2. Open the left-hand side panel *(Fig. 10-1)*.
3. Press the "Edit" button on the sensor (-B154 / -BF154).
   "Output A" flashes.
4. Press the "Edit" button once again.
   "ConS" or "FLW" flashes.
5. Press button A to change to "ConS" (air consumption measurement).
6. Press the "Edit" button once again.
7. Enter the threshold value ("100" for 100 litres).
8. Press the "Edit" button once again.
9. Press button A to set the switching output (normally open contact) to "No".
10. Press the "Edit" button once again.
11. Press the "Edit" button again for 3 sec. to switch the sensor to "Run" mode (operation).

2 Maintenance and cleaning

⚠ WARNING

General dangers when carrying out maintenance work
Non-observation of the safety instructions in manuals can result in severe injuries or death.

- Always observe the safety instructions provided in the manuals.
- Only carry out maintenance, cleaning or repair work when the machine is switched off.

  Note: Specific maintenance jobs can only be performed when the machine is switched on (e.g. raising the mouthpiece or testing a drive).

  Whenever maintenance jobs require the machine to be switched on, the machine may only be activated for the relevant step (e.g. test run for a drive). After completion of this step, the machine must be switched off immediately and secured against being switched on.
- Always wear cut resistant gloves (cut resistance level 5) when carrying out maintenance, cleaning or repair work on the knife drum!
- When the cutter head is open, the knife drum must always be protected with the red safety cover plate supplied. Remove the safety cover plate again before closing the cutter head. Place the safety cover plate in the left-hand door of the switch cabinet (the cover plate adheres to the door plate with magnets).

NOTICE

Malfunctions, wear and damage due to foreign materials!
Impurities and moisture as well as tools, cleaning tools and other aids left in the machine can impair the function and service life of components.

- After completing maintenance and cleaning work make sure that all tools, cleaning tools and other aids are removed from the machine.
- Never use compressed air for cleaning. Compressed air may cause dirt and liquid to enter bearings and other inaccessible openings. This could lead to malfunctions.
- Never use water to clean electrical components.
- Always make sure to prevent moisture from entering electrical components, joints, bearings and guides.

Disposing of lubricants and cleaning agents

Lubricants (oils, greases) and cleaning agents must be disposed of professionally in accordance with valid local regulations.

Information
After maintenance work has been completed, make sure that all parts in direct contact with the materials composing the final product are absolutely clean before restarting the machine.

2.1 Performing maintenance work

Maintenance intervals
Carry out the specified adjustments and maintenance work at the specified intervals.

Genuine spare parts
Use only genuine replacement parts.

Information policy
1. Inform the machine operators that maintenance and repair work is about to begin.
2. Cordon off the danger zone.
3. Erect warning signs to indicate that maintenance work is being carried out.

Lifting
When replacing larger assemblies, carefully attach and secure them to the hoist. Be sure to observe the instructions in the **“Transport and Installation Manual TTR.0590.xxx.xx”**.

Screwed connections
After assembly, check that all screws are firmly tightened.

Cleanness
After completing maintenance work, make sure that all parts in direct contact with the materials of the final product are absolutely clean.

Removing tools
After maintenance work, make sure that all tools, auxiliary equipment, etc. have been removed from the plant.

Function check
After maintenance, check the function of all safety devices.

Test run
The plant must also be connected correctly by connectors to the power network in the case of a test run.

Manufacturer’s operating instructions
Pay strict attention to the safety instructions contained in the original documentation drawn up by the manufacturer when working on plant component parts.

2.2 Performing cleaning work

Regular cleaning
- Clean the plant regularly and always keep it in a perfectly clean state. Dirt deposits can lead to malfunctions and damage to the plant.
- Adapt the cleaning intervals to local conditions and the properties of the product.

Procedure

- When carrying out cleaning always *start at the top and work downwards*, i.e. commence cleaning at the top of the plant and work downwards so that the last section of the plant to be cleaned is at floor level.

Sources of danger due to dust layers

Dust layers carry the following risks:

- A primary explosion within a building can whirl up dust layers into clouds and cause secondary explosions, which can be more destructive than the original primary explosion.
- Dust layers prevent heat dissipation from devices, which can result in overheating and damage to equipment.
- Dust layers can self-ignite on hot surfaces and lead to smouldering fires. This can be a slow process.
- A dust layer can be blown up to form a dust cloud, which can ignite on a hot surface, causing an explosion.

No dust layers

To prevent the above risks, the plant must be kept clean to classification “good” in accordance with DIN EN 50281-3/VDE 0165 Part 2/2003-05 Annex C.

Cleaning intervals must be selected such that no dust layers can form or the dust level is negligible.

No compressed air

Never use compressed air for cleaning because this can result in dirt penetrating bearings and other gaps, resulting in a potentially explosive dust-air-mixture!

Vacuum cleaning

Extract dust and dirt with a certified industrial vacuum cleaner.

Electrical components

Do not use water for electrical components.

Moisture

Make sure that no moisture can enter into electrical components, joints, bearings and guides.

2.3 Maintenance and cleaning schedule

All maintenance work to be carried out can be viewed in a maintenance schedule which can be called up via the visualization system. The maintenance schedule indicates the maintenance work that needs to be performed on the machine.

It does not replace the maintenance work listed in the Service Manual and is only provided for support purposes (see Visualization Manual HSW.0590.xxx.xx).

NOTICE

Exclusion of warranty claims due to failure to comply with the specified maintenance intervals.
Failure to comply with maintenance intervals will render warranty claims void.

- Perform maintenance work in accordance with the maintenance schedule.
- The maintenance intervals specified in this manual (given in hours of operation) are merely intended as a guideline and are only valid if ideal production conditions are ensured.

  Local production conditions (e.g. higher air humidity), machine care and condition of the product to be processed may require the maintenance intervals to be modified (reduced).

Information
Daily maintenance jobs must be carried out after a shift change but at least once a day.

Information
The intervals (in hours of operation) for the weekly, monthly and annual maintenance work can be changed within specific limits in the maintenance schedule on the visualization system.

In the “Maintenance schedule”, you can also set whether a message will appear on screen if the specified maintenance interval is exceeded.

Information
After completing a maintenance job, this should always be confirmed with the “Reset” button on the visualization to restart the maintenance interval timer.

Confirming using the “Reset” button

- resets the operated hours indication since the last maintenance activity to “0”.
- stores the date and time of the maintenance job performed in the system.

The reset should also be performed if the interval timer has not yet elapsed.

Interval	Machine/assembly	Activity
Daily	Entire machine	• Empty and clean all drawers. • Empty and clean all dust collection bins on: – conveyor chain, – chain dust extractor (if fitted) (↑ 3-101), – individual dust extractor (if fitted) (↑ 3-100). • Remove the sliding plate at the tobacco discharge point and clean it (see (↑ 3-47)). **Note**: Never reach into the machine when the drawers or dust collection bins have been removed. The machine may only be set into operation if all drawers and dust collection bins have been inserted correctly!
	Side walls	• Clean the side walls in the cutter. • Clean the shaft lead-throughs on the mouthpiece (in the side walls of the upper pivot mounting) (access from the side walls).
Daily	Grinder unit	• Clean the brass cover with the grinder unit open (↑ 3-69). • Clean the steel bands (↑ 3-69). • Clean the dustbin for the grinder unit (↑ 3-73). • Clean the grinding wheel housing (cast housing near the brass plates). • Remove grinding dust in the interior of the cup wheel. • Remove deposits on the choke flap (ejection bin).
	Conveyor chains	• Clean the conveyor chains (see (↑ 3-27)).
	Mouthpiece and the compacting trough	• Clean the mouthpiece and the compacting trough.
	Pre-compactor	• Clean the belts of the pre-compactor (see (↑ 3-94)).
	Chain dust extractor (optional)	External chain dust extractor: • Empty the drawer depending on the filling level (see (↑ 3-102)). • Check the differential pressure display several times a day (visually): green – yellow – red. • Use the pneumatic filter cleaning device to clean the filter cartridge (see Operating Manual HBD.0590.xxx.xx) and empty the drawer several times a day in accordance with the filling level (see (↑ 3-101)).

Interval	Machine/assembly	Activity
Weekly (35 - 46 hours of operation)	Entire machine	• Clean the viewing windows (see (↑ 3-99)).
	Roller chains	• Check the roller chain tension, adjust and oil slightly as required (see (↑ 3-6)).
	Grinder unit	• Check grinder unit, dressing diamond and carriage guide (↑ 3-54) and adjust if necessary. • Lubricate the carriage guide (↑ 3-66). • Maintenance interval: every 1 to 4 grinding wheel replacements. • To check the extraction function: – Check pipe bends and hoses for deposits. – Check the hoses for damage and replace them if necessary (↑ 3-73).
	Knife drum	• Lubricate the ball joint on the knife advance unit (grease nipple) (↑ 3-46). **Maintenance interval:** every 2 to 6 knife replacements.
	Mouthpiece	• Check the cutting slot. The gap between knives (knife drum) and bottom knife bar (mouthpiece) should be less than 0.2 mm (see (↑ 3-75)). Maintenance interval: every 16 to 24 hours of operation.
	Compacting trough	• Check the compacting trough leafsprings for damage and that they are firmly secured (see compacting trough documentation).
	Measuring/monitoring units	• Clean all proximity switches, shaft encoders, sensors and photosensors.

Interval	Machine/assembly	Activity
Monthly (140 - 180 hours of operation)	Conveyor chains	• Check the conveyor chains. If necessary, remove (see (↑ 3-13)) and clean (see (↑ 3-28)). • Clean drive rollers, guide rollers and conveyor chain supports.
	Knife drum	• Check the surfaces of the V-belts or the toothed belt for damage. • Check V-belt sag (max. 15 mm at 50 N). If necessary, retension or replace (see (↑ 3-43)).
	Grinder unit	• Check chain drive. If necessary, re-tension the chain drive (↑ 3-67) and readjust the traversing limiters (↑ 3-68) of the grinder unit. The distance between the grinding head direction reversal points and the limiting points must be 0.5 - 1 mm. The limiting points must not be used as stops. • Remove the steel bands from the grinding carriage and clean them (↑ 3-72).
	Compressed air unit	• Check the filter cartridges for the compressed air supply and replace them if necessary.
	Cooling unit	• Check the cooling unit for soiling. Open the cover to do so and clean with compressed air if necessary. Follow the manufacturer's operating instructions.
	Pre-compactor (depending on type)	• Check belt run and retension or replace (if worn). • Clean the belt and check the width of gaps (see (↑ 3-94)).
	Chain dust extractor (optional)	• Check the filter cartridge for soiling (↑ 3-103). If necessary, remove the filter cartridge and clean it with water or replace it. • Check that the filter cartridge mounting is firmly secured. • Visually inspect the suction hose, mains connection cable, extractor nozzle and compressed air connection.
Annually (1900 - 2100 hours of operation)	Conveyor chain drive gear unit	• Check the oil level (the sight glass on the gear unit must be half full of oil). Top up oil if necessary.
	Knife drum	• Clean and lubricate the worms, worm wheels and connecting rods in the knife drum. • Check the brake (by measuring the time from maximum speed to standstill of the knife drum) (see (↑ 3-47)).
After 4000 operated hours	Viewing window of the hood	• The viewing window of the hood is subject to ageing it must be replaced every two years (in accordance with the recommendation of EN 13218).
After 7800 to 8200 hours of operation	Conveyor chain drive gear unit	• Change the oil (↑ 3-24) (required oil quantity: approx. 13 l): drain the waste oil only while it is warm and extract any residual oil; only use flushing oil for cleaning.

Interval	Machine/assembly	Activity
After 9000 operated hours	Entire machine	• Give the machine a general overhaul. Körber Technologies recommends having the entire machine inspected by a service technician after 9000 operated hours followed by a general overhaul.
As required	Cutting width measurement	• Check the cut width. The cut width can be checked either by measuring the tobacco fibre or by using a wax stick (see (↑ 2-8)).

2.4 Cutting width measurement

⚠ WARNING

Risk of injury when carrying out work on the running machine
Reaching into the machine when it is running can result in very serious injuries and even death.

Accessing the compacting unit is only permitted when the machine is switched off and secured to prevent it from being switched on again.

The cut width can be checked either by measuring the tobacco fibre (usually in the laboratory) or by using a wax stick.

Measuring cutting width using a wax stick

1. Switch off the machine and secure it against restarting.
2. Place one or more wax sticks in the tobacco in the compacting unit.

   The sticks should be positioned in the middle of the tobacco cake.
3. Activate production standby mode for the machine and start it.

   The wax sticks in the tobacco are cut together with the tobacco.
4. Collect the parts of the cut wax sticks from the discharged tobacco, measure them and determine the cut width and standard deviation.

2.5 Lubricants

NOTICE

Impairment of the lubricating effect
Insufficient lubrication results in strong heat development, even a fire can develop. This can cause considerable damage to equipment.

When topping up the oil, take care that you do not mix different types of synthetic lubricants with mineral lubricants! If doubt exists when topping up oil as to which type of oil was last used, drain the oil completely and refill with an approved type of oil.

NOTICE

Leaks
Risk of material damage.

- To avoid the possible risk of leakage, synthetic H1 lubricants must not be mixed with white mineral oils.
- As a general rule, the way a sealing material swells when immersed in oil varies from one oil type to another. You may find that leaks occur after changing to a different oil type.
- The service life of white oils is also much too short.

Changing the oil type

However, if you want to change from the **currently used** type or one of the **recommended** oils to a **different** oil, ask the manufacturer of that oil to guarantee that it has the same lubricating properties as the proposed oil and is compatible with the oil you were using before (i.e. they should mix without foaming and not be incompatible in any other way).

On gear units with filler and/or drain plugs, the filler and/or drain plugs must be resealed after changing the lubricant.

Information
As a general rule, you should only use the oil or grease types specified on the type plate or in the operating instructions!

Information

If you do not have any of the oil or grease brands listed in this manual in stock or find it difficult to obtain them locally, make sure you use oils and greases with approximately the same lubricating properties. The lubricants named in the following tables may be regarded as equally suited. The details on viscosity, flash point and pour point for oils can be taken as a basis for selecting similar lubricants. The order in which the oil and grease brands are listed does not reflect a rating of the products.

2.5.1 Oils

2.5.1.1 Oil for gear motors M3/MA3 and M4/MA4

Recommended oil types for gear motors:

Food-grade oil according to CLP ISO H1 VG460 - preferably: Klübersynth UH 1 6-460.

2.5.1.2 Oil for roller chains (triplex)

Use only acid-free oil, do not use waste oil.

2.5.2 Greases

2.5.2.1 Grease for grinder unit

Use only the following greases to lubricate the grinder unit:

Grease type	Manufacturer	Brand	NLGI classification	Worked penetration	Working temperature in °C	Drop point in °C
K 2 K, KP 2 K	Klüber *)	Klübersynth UH1 14-222	2	265 – 295	- 25 to +100	>220
*) First filling						

2.5.2.2 Grease for knife drum

For the bearings of the knife drum shaft, worms and worm wheels of the knife drum as well as the grinder unit drive gear unit, use only the following grease:

Grease type	Manufacturer	Brand	NLGI classification	Worked penetration	Working temperature in °C	Drop point in °C
K 2 K, KP 2 K	Klüber *)	Klübersynth UH1 14-222	2	265 – 295	- 25 to +100	>220
*) First filling						

2.5.2.3 Grease for conveyor chains

Only use the following type of grease for conveyor chains:

Grease type	Manufacturer	Brand	NLGI classification	Worked penetration	Working temperature in °C	Drop point in °C
K 2 K, KP 2 K	Klüber *)	Klübersynth UH1 14-222	2	265 – 295	- 25 to +100	>220
*) First filling						

2.6 Thread-locking fluid

Screws can work loose during the operation. To prevent this, they must be secured using thread-locking fluid. This especially applies to screws on the conveyor chains, cover panels, guide bridges, pivot mountings and sliding plates.

Use a medium-strength thread-locking fluid (e.g. Loctite 243).

⚠ CAUTION

Adhesive and cleaning agents are irritants!
Avoid skin contact with the adhesive and cleaning agents!

- Wear safety goggles (Splashes of acetone in the eye can cause blindness! Rinse immediately with an eye rinse!).
- If adhesive gets in contact with skin, wash it off with plenty of water and soap.
- Use solvents and adhesives only in well ventilated areas (extractor!).
- Do not eat or drink while you are working.

Information
Gluing must be carried out only by briefed personnel in a clean environment (no oil, no lubricant mist, minimal dust).

For details about gluing, see also the adhesive manufacturer's instructions.

Pre-treatment

Tapped holes and screws must be cleaned and de-greased using a suitable cleaning agent (e.g. acetone). If necessary, wet-grind the surfaces with Scotch-Brite fleece and then clean with acetone.

Stainless steel threads must be cleaned and activated by brushing with a brass brush.

Shake the adhesive well before use.

Carrying out the glue application

Apply the adhesive to the outside thread in the form of an all-round bead and then assemble the parts as quickly as possible. The parts of the union must only be repositioned relative to each other for as long as the adhesive has not started to set, i.e. no resistance must be felt when turning. Repositioning should be avoided if possible!

Secondary cleaning

Excess adhesive that emerges can be wiped off with an acetone-soaked piece of fabric.

3 Subassemblies

3.1 General information

⚠ WARNING

Risk of injury due to incorrect maintenance and repair work!
Incorrectly performed maintenance and repair work can result in very serious or fatal injury.

- Maintenance work may only be performed by sufficiently qualified specialist staff.
- During all work on the plant or machine, the warning and safety instructions must be observed.
- For all work on the plant or machine, maintenance staff must wear suitable safety equipment (protective footwear, tight-fitting clothing, possibly cut resistant gloves (cut resistance level 5) etc.).

⚠ WARNING

Risk of injury from external voltages!
Mains power supply connection leads and orange-coloured leads may be live even when the main switch is off. Death or serious physical injury can occur.

- For all maintenance and repair work in dangerous machine areas, the main switch (-Q01/-QA0) of the plant or machine must be turned to "OFF" and secured in the off position to prevent it from being switched on again.
- In addition to the main switch (-Q01/-QA0), the main switch for the auxiliary mains supply (-Q01T02) must also always be switched off and secured in the off position to prevent it from being switched on again on the following components:
  - Switch cabinet
  - Emergency stop system
  - Operator unit
  - Lighting system
  - Socket for the programming device (PG)

Replacing subassemblies

NOTICE

Damage to machinery due to the use of incorrect spare subassemblies and spare parts!
Replacing defective subassemblies and parts with incorrect spare subassemblies or spare parts can result in damage to machinery (also during operation later on).

- Defective subassemblies and parts must be replaced only by qualified staff.
- Observe the information below on the use of spare subassemblies and spare parts.

Checking the part number

Before replacing defective subassemblies or parts, check the part number to determine whether the spare subassemblies or parts are allowed as replacements.

Checking the software version

Components that contain software (e.g. EPROMs) must have the correct software version.

Avoiding electrostatic charges

NOTICE

Electrostatic charge!
Electrostatic charges can cause damage to electronic components and render them unusable.

- Electronic components must be replaced only by qualified staff.
- Electronic components must be replaced only when the system has been switched off.
- Electronic components must be protected against electrostatic discharge from the human body. This is done by:
  - Wearing antistatic gloves
  - Wearing an anti-static wrist strap
  - Touching earthed parts (e.g. switch cabinet) beforehand
- Electronic components must not come in contact with electrostatically chargeable objects.
- When working on electronic subassemblies, an earthed work surface must be used.

Electronic modules or cards can be damaged or destroyed by electrostatic charges. Suitable preventive measures must be taken when handling these modules.

Making basic settings

Many modules require that basic settings be made before the part is installed. These settings (e.g. on coding switches on electronic cards) are used for system configuration and have to be made

exactly according to the specifications in the corresponding circuit diagram or the software installation instructions.

NOTICE

Damage to equipment due to incorrect settings!
If the basic settings made for machine subassemblies are incorrect, this can result in damage to equipment (also subsequently during operation).

- Basic settings must be made only by qualified staff.
- Basic settings must be made using only the values specified in the circuit diagram or in the software installation instructions

Before installation: Make the basic settings according to the circuit diagram or software installation instructions (if available).

After installation: Set proximity switches, light barriers, etc. only after installation.

3.2 Completing the machine by adding a tobacco feed unit

The machine constitutes incomplete machinery as described in Directive 2006/42/EC and must not be operated without a feeding plant. The tobacco is usually fed to the machine via a compacting trough (SRB). However, another feeding system can also be used depending on customer requirements.

The following section describes the settings for the SRB compacting trough that is usually used.

3.2.1 SRB compacting trough

Compacting trough SRB-L (for lamina) or SRB-S (for stem) is a plant with its own documentation (see separate Process Engineering Manual **HVT.8080.xxx.xxx** and data sheet **DBL.8080.xxx.xxx**).

3.2.1.1 Compacting trough control (optional)

The tobacco cutter can be equipped with a compacting trough control system. The required frequency converter for the compacting trough is then fitted in the cutter switch cabinet.

On tobacco cutters with compacting trough control system, a setpoint for the speed of the compacting trough can be specified in Hz.

Information
For details on how to make a speed setpoint setting for the compacting trough refer to the Visualization **Manual HSW.0590.xxx.xx**.

3.2.1.2 Maintenance

Information
For all maintenance work to be carried out on the SRB compacting trough refer to the separate manual **HVT.8080.xxx.xx**.

3.3 Conveyor chains

⚠ WARNING

Risk of crushing when tensioning the chains!
Parts of the body can get crushed when tensioning the roller chains.

Proceed with extreme caution.

⚠ WARNING

The drawer underneath the extension can also be removed and emptied during production.
Reaching into the area where the drawer was removed can result in serious injury.

Never put your hands in the area of the removed drawer when the machine is running.

⚠ CAUTION

If the side drawer of the extension is removed, access to the lower conveyor chain is possible.
Reaching into the area where the drawer was removed can result in minor injury.

Never put your hands in the machine where the side drawer was removed.

3.3.1 Set-up work (conveyor chains)

3.3.1.1 Setting the scraper on the lower conveyor chain

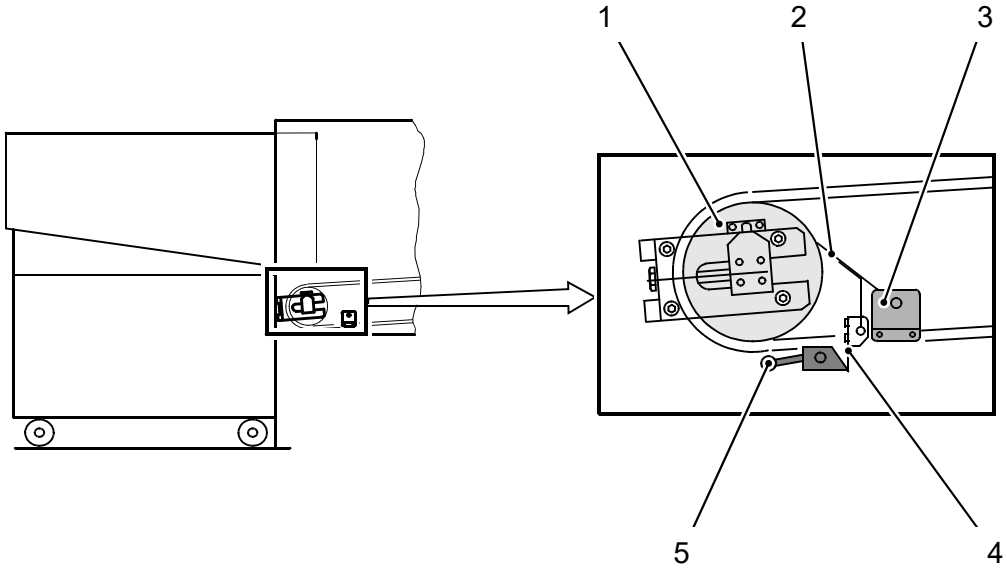

Fig. 1 Scraper: guide roller (0591_U-Schaber.z.00000.00.cgm)

Procedure

⇨ Set the toggle bar *(Fig. 1-5)* so that the leafspring *(Fig. 1-4)* presses the scraper *(Fig. 1-2)* against the guide roller *(Fig. 1-1)*.
Ensure that the scraper makes even contact with the guide roller along its entire length.

Information
The drawer *(Fig. 1-3)* should be emptied after every shift, but at least once a day.

3.3.1.2 Roller chains - checking the tension and retensioning

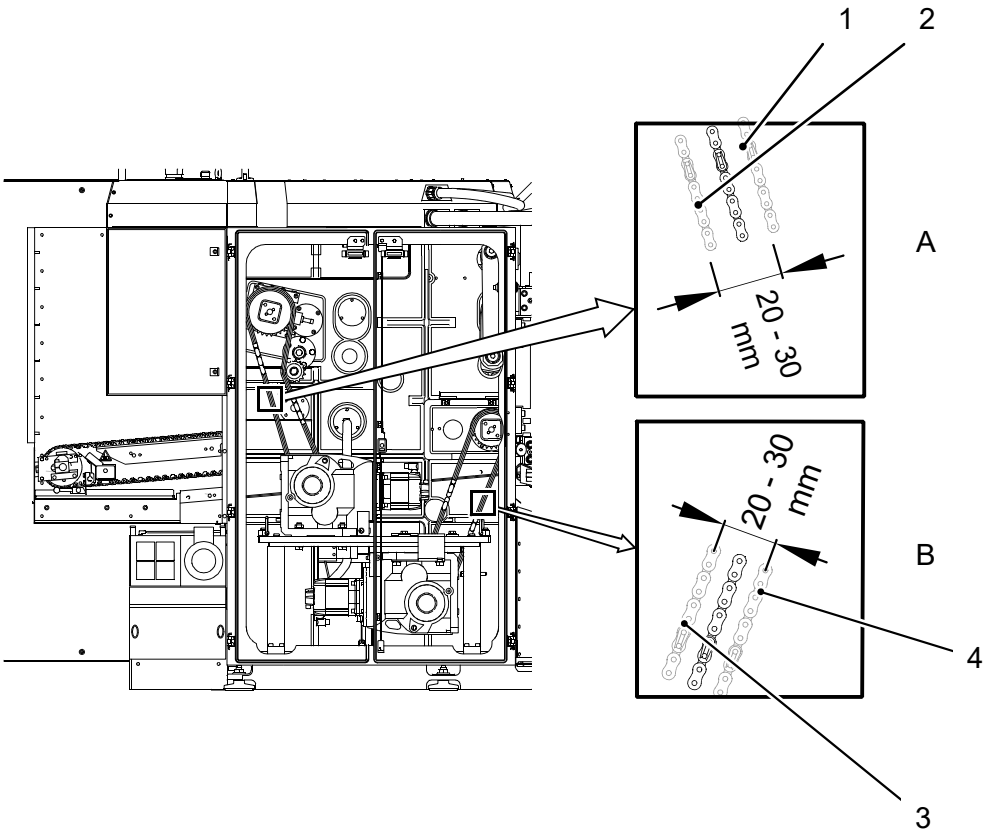

Fig. 2 Roller chains: checking the tension (0592_K100HWR.z.00000.00.cgm)

Checking the tension of the roller chains

1. Press the roller chains manually into the limit positions. The following deviations between the respective limit positions should be achieved:
   - Upper roller chain *(Fig. 2-A)*:

     Measuring point: at the pull strand (tension relieved), centrally between the axles

     Chain deflection after setting: 10 to 15 mm (i.e. difference in deflection between upper *(Fig. 2-1)* and lower *(Fig. 2-2)* limit position 20 to 30 mm)
   - Lower roller chain *(Fig. 2-B)*:

     Measuring point: at the return strand, centrally between the axles

     Chain deflection after setting: 10 to 15 mm (i.e. difference in deflection between upper *(Fig. 2-3)* and lower *(Fig. 2-4)* limit position 20 to 30 mm)
2. Correct the roller chain tension if necessary.

Tensioning the roller chains

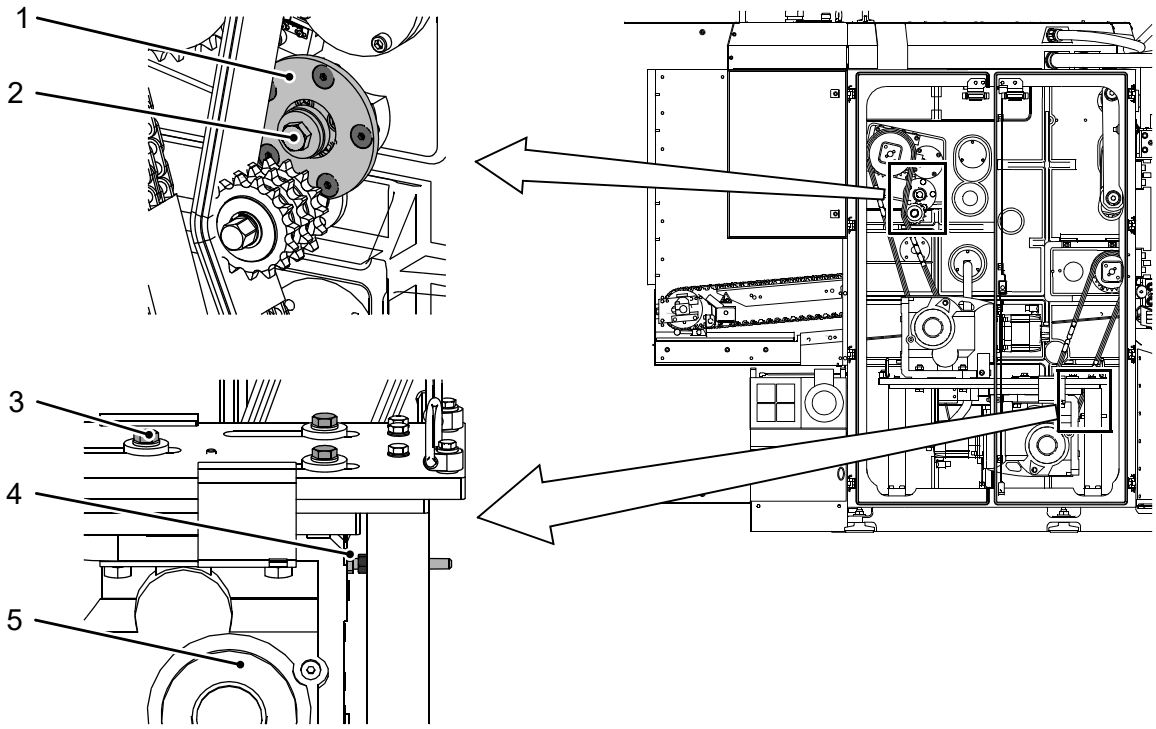

Fig. 3 Tensioning the roller chains (0592_K100HWR.z.00001.01.cgm)

⚠ WARNING

Risk of crushing when tensioning the chains!
Parts of the body can get crushed when tensioning the roller chains.

Proceed with extreme caution.

⚠ CAUTION

Damage caused by the settling behaviour of roller chains!
After the start of production with new roller chains, the chains expand slightly and the roller chain tension decreases.

Retension new roller chains after an operating period of approx. 5 - 7 h.

Upper roller chain

Proceed as follows to tension the upper roller chains:

1. Release the screw *(Fig. 3-2)* on the tensioner *(Fig. 3-1)*.
2. Correct the tension.
3. Tighten the screw *(Fig. 3-2)* to a torque of 230 Nm.

Information
If it is not possible to move the chain tensioner even though the screw *(Fig. 3-2)* is released, a forcing screw (M20) is supplied in the accessories kit, which can be used to pull the tensioner *(Fig. 3-1)* off a bit until it can be moved.

Lower roller chain

Proceed as follows to tension the lower roller chains:

1. The tensioning screw *(Fig. 3-4)* must make contact with the gear motor *(Fig. 3-5)*.
2. Slightly release the screws *(Fig. 3-3)* (do not remove!).
3. Use the tensioning screw to move the entire gear motor in order to tension the lower roller chain.
4. Retighten the screws *(Fig. 3-3)*.

3.3.1.3 Conveyor chains - checking sag and tensioning

Conveyor chains: checking sag

Checking the sag of the upper conveyor chain

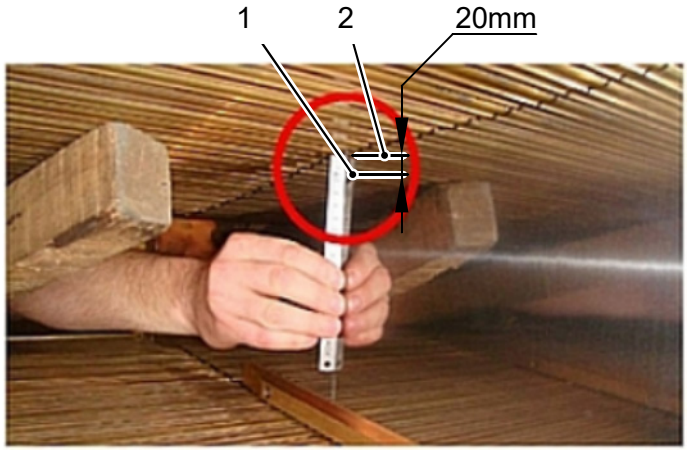

Fig. 4 Sag: upper conveyor chain (0591_Kette2014.z.00000.00.cgm)

Target sag of the upper conveyor chain: approx. 20 mm.

Measuring point: lowest point between two stainless steel panelling plates.

The measured distance must be the same on both sides.

Information
The upper illustration represents the mirroring side wall on which markings of the conveyor chain bottom side are drawn and measured.

Procedure

1. Open the mouthpiece. To do so, raise the mouthpiece with the upper conveyor chain using the operator unit in manual mode (see Visualization Manual **HSW.0590.xxx.xx**).
2. Switch off the main switches (-Q01/-QA0) and padlock them to prevent them being switched on again.
3. Mark the height of the sagging conveyor chain (bottom side) on the side wall with a felt pen *(Fig. 4-1)*.
4. Press the conveyor chain with square timbers against the plastic sliding panel on top of it and mark the bottom side again on the side wall *(Fig. 4-2)* with a felt pen.
5. Measure difference between the markings previously made.

   If necessary, correct the conveyor chain tension.

Checking the sag of the lower conveyor chain

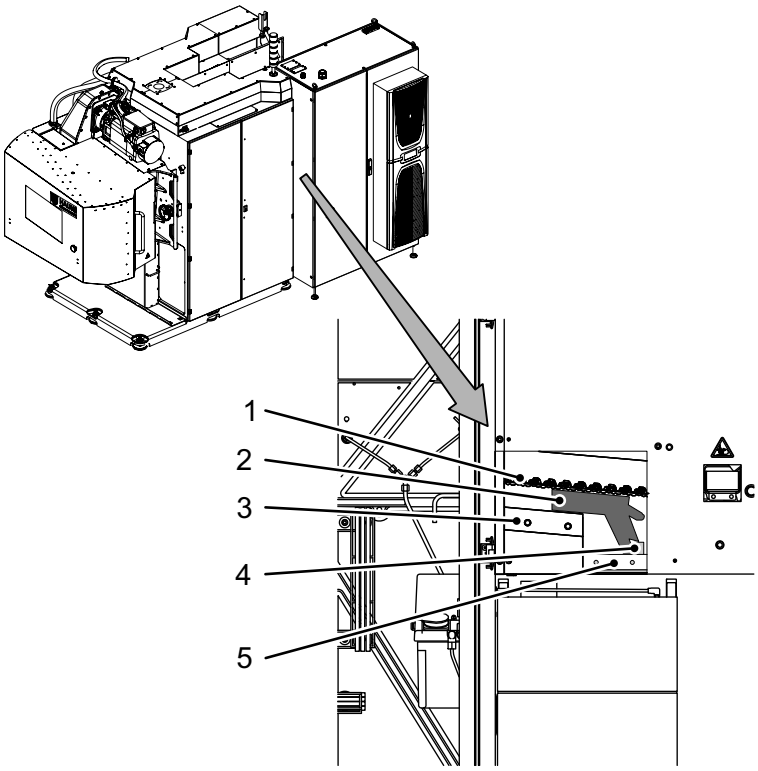

Fig. 5 *(0592_K100HWR.z.00059.00.svg)*

Information
As the design is different, no gauge *(Fig. 5-2)* is used for the tobacco cutter KT 2 - L160.

Target sag of the lower conveyor chain: approx. 30 mm - 35 mm.

Measuring point: upper side of the guide bridge *(Fig. 5-3)*, accessible after removing the drawer *(Fig. 5-5)* or pivoting the pre-compactor unit away (only on KT 2 - L160).

Procedure (not for KT 2 - L160)

⇨ Push the gauge *(Fig. 5-2)* included in the accessories kit between the top of the guide bridge and the conveyor chain

(Fig. 5-1). Pay attention to the contact edge *(Fig. 5-4)* on the cross-tie of the extension. The type-dependent contact edge of the gauge can be identified by referring to the engraving.

If the gauge just fits between the conveyor chain and guide bridge, this corresponds to a sag of approx. 32 mm.

If the sag is clearly higher or lower, the tension of the conveyor chain must be corrected.

Check the sag and make sure it is the same on both sides.

Procedure (only for KT 2 - L160)

⇨ Push a rod (e.g. round bar) with a diameter of 18 mm between the top of the guide bridge and the conveyor chain.

If the rod just fits between the conveyor chain and guide bridge, this corresponds to a sag of approx. 32 mm.

If the sag is clearly higher or lower, the tension of the conveyor chain must be corrected.

Tensioning the conveyor chains

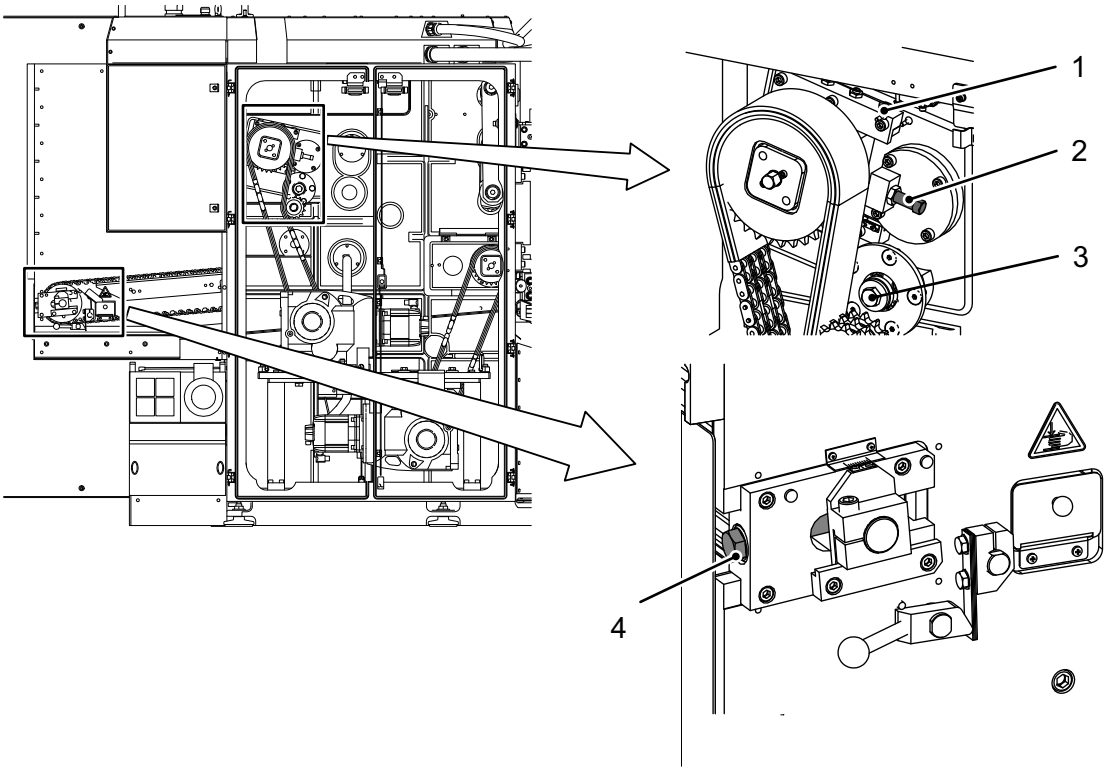

Fig. 6 Tensioning the conveyor chains *(0592_K100HWR.z.00003.01.svg)*

⚠ WARNING

Risk of crushing when tensioning the chains!
Parts of the body can get crushed when tensioning the roller chains.

- Proceed with extreme caution.
- First tension the upper conveyor chain and then the lower conveyor chain.

⚠ CAUTION

Damage to machinery possible!
Over-tensioning of the conveyor chains will increase wear on the chain links.

- Tension the upper conveyor chain in the raised position and check its sag. Scales are attached on both sides of the tensioners for the upper and lower conveyor chains. The scales allow conveyor chain tension to be readjusted uniformly on both sides.
- The conveyor chains must be aligned so that they run straight, i.e. the gap between conveyor chain and both side walls must be the same. (Even if, as the result of this, the marks on both shaft ends do not point to the same graduation on the scale.)
- If the left-hand and right-hand conveyor chain tensioners are not uniformly adjusted, this will cause wear on the face ends of the chain links due to friction on the side panels.

Tensioning the upper conveyor chain

1. De-tension the upper roller chain using the chain tensioner *(Fig. 6-3)*.
2. Release the clamping screws (4x) *(Fig. 6-1)* on one side of the conveyor chain.
3. Adjust the tension of the upper conveyor chain with tensioning screws on both sides *(Fig. 6-2)*.
4. Measure the sag as described before. When the correct sag (about 20 mm) has been reached, tighten and secure the clamping screws on the upper conveyor chain *(Fig. 6-1)*.
5. Tension the roller chain with the chain tensioner *(Fig. 6-3)* (see the section headed **"Roller chains – checking tension and retensioning"** (↑ 3-6)).

Tensioning the lower conveyor chain

1. Adjust the tension of the lower conveyor chain on both sides using the tensioning screw *(Fig. 6-7)* (30-35 mm sag).
2. Measure the sag as described before and adjust the sag if necessary.

3.3.2 Maintenance work (conveyor chain)

3.3.2.1 Wear limits for chain links and sliding plates

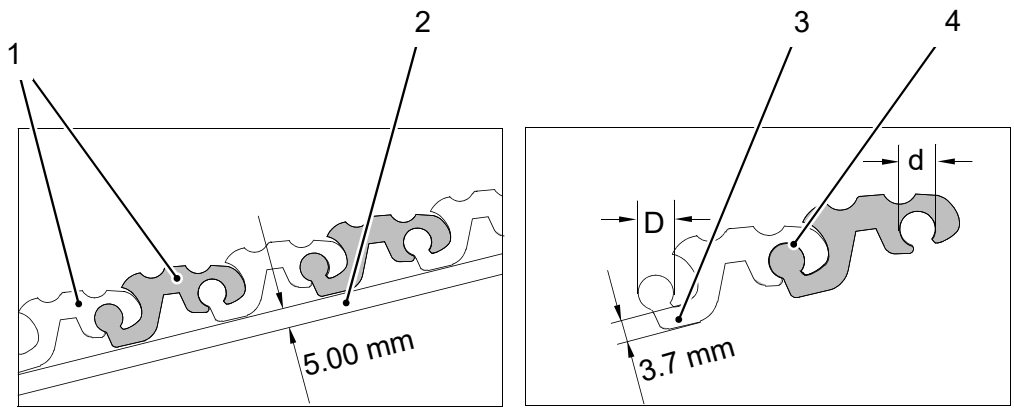

Fig. 7 Wear limit values (0591_Kette.z.00005.00.cgm)

Movement of the conveyor chain results in wear at the following points:

- between the joints *(Fig. 7-1)* of the chain links
- between the chain links *(Fig. 7-3)* and the plastic sliding plates *(Fig. 7-2)*

Conveyor chains and plastic sliding plate should be replaced when certain wear limits have been reached.

Information
The wear limits given below are recommendations.

Wear limit values

Plastic sliding plates	Recommended minimum material strength: 5.00 mm The plastic sliding plates *(Fig. 7-2)* should be replaced as soon as they have a material thickness of 5.00 mm, which corresponds to a wear of 3.00 mm in relation to the delivery state. **Note:** As the wear of the plastic sliding plates can be uneven, measurements should be taken at several points.
Chain link material thickness	Recommended minimum material strength: 3.70 mm The thickness of the lower chain links *(Fig. 7-3)* should not fall below 3.7 mm. **Note:** There is a risk of breakage if the material thickness of the chain links is too low.
Chain link joints	Recommended maximum gap size: 0.4 mm The clearance between journal outside diameter *(Fig. 7-D)* and groove inside diameter *(Fig. 7-d)* of the chain joints should not exceed 0.4 mm.

If clearance is higher, the relevant chain links should be replaced.

3.3.2.2 Removing the upper and lower conveyor chains

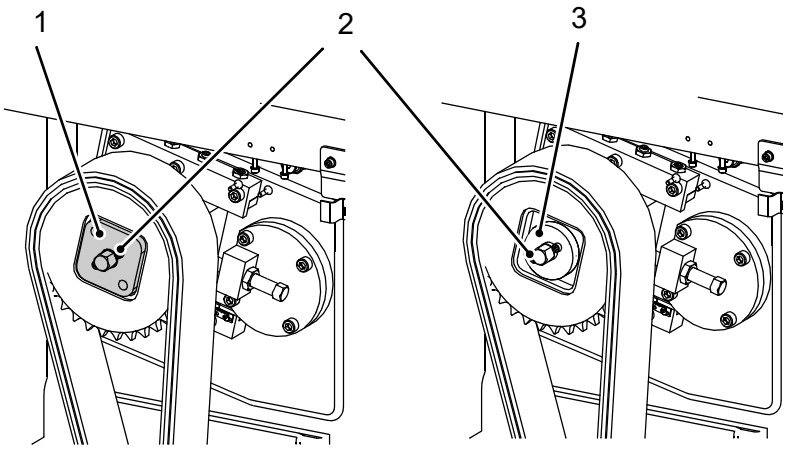

Fig. 8 Chain wheel of the upper conveyor chain (0592_K100HWR.z.00005.00.cgm)

Prerequisites

✓ The main switch (-Q01/-QA0) is switched off and secured to prevent it from being switched on again.

Procedure

1. Remove the mouthpiece (see the section headed **"Removing and fitting the mouthpiece"** (↑ 3-77).
2. Release the screws *(Fig. 8-2)* and remove the plate *(Fig. 8-1)*. To do so, use the screws *(Fig. 8-2)* as forcing screws in the free holes of the plate *(Fig. 8-1)*.

   Do the same on the lower chain wheel.
3. Fit the auxiliary part *(Fig. 8-3)* using the same screws *(Fig. 8-2)*.

   Do the same on the lower chain wheel.

NOTICE

Risk of machine damage!
The auxiliary parts must make contact with the chain wheels over their entire surface. There must be no play between chain wheel and auxiliary part.

This ensures that the drive shaft remains in the correct position. If this is not observed, there is a risk of machine damage.

Information
The auxiliary parts contain a bearing that allows the drive shaft to be turned by hand independently of the roller chain wheels.

Before installing the auxiliary parts, check that they move freely. If it sticks or noticeably notches, the bearing is defective and the auxiliary part must be replaced.

Do not tighten the auxiliary part mounting screws to more than 2 Nm. After tightening, check that there is no play between chain wheel and auxiliary part.

Overtightening screws damages the auxiliary part.

Information
The auxiliary parts are included in the accessories kit supplied with the delivery. After installing the machine, place the auxiliary parts in the provided storage locations *(Fig. 9)* on the machine.

Depending on the cutter's design status, the storage locations are already implemented or must be retrofitted by the customer.

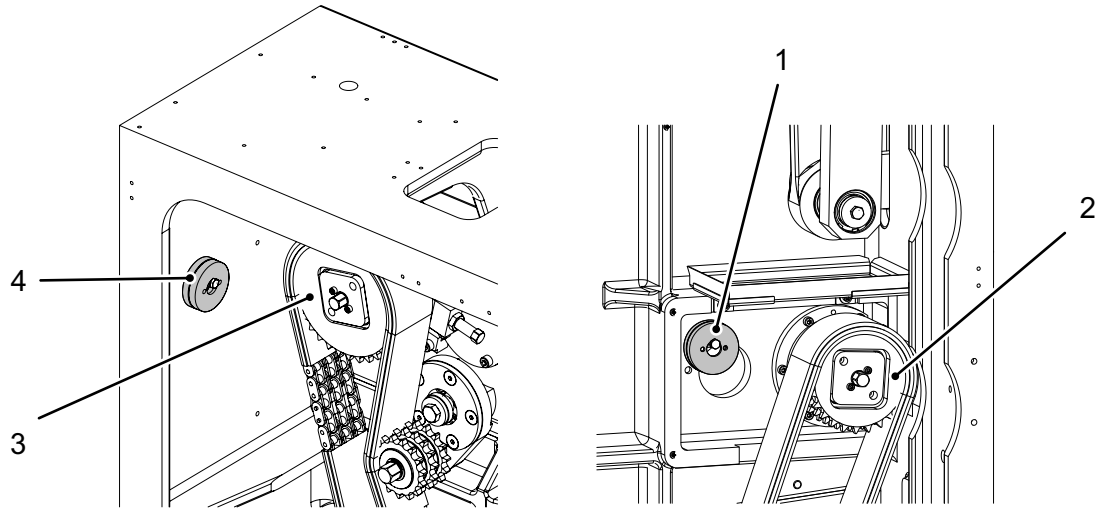

Fig. 9 Storage locations for auxiliary parts (0592_Ablageort.z.00000.00.svg)

– Auxiliary parts storage location for the upper conveyor chain *(Fig. 9-4)*:

  On the side wall in the area of the drive chain wheel *(Fig. 9-3)* of the upper conveyor chain.

– Auxiliary parts storage location for the lower conveyor chain *(Fig. 9-1)*:

  On the side wall below the collector plate near the drive chain wheel *(Fig. 9-2)* of the lower conveyor chain.

This disconnects the form-locking connection between the drive wheel and the conveyor chain shaft so that the conveyor chain shaft can be turned via the hexagon head.

Information
As an alternative to carrying out steps 2 and 3, you can also de-tension the roller chains and open the roller chains via the connecting link.

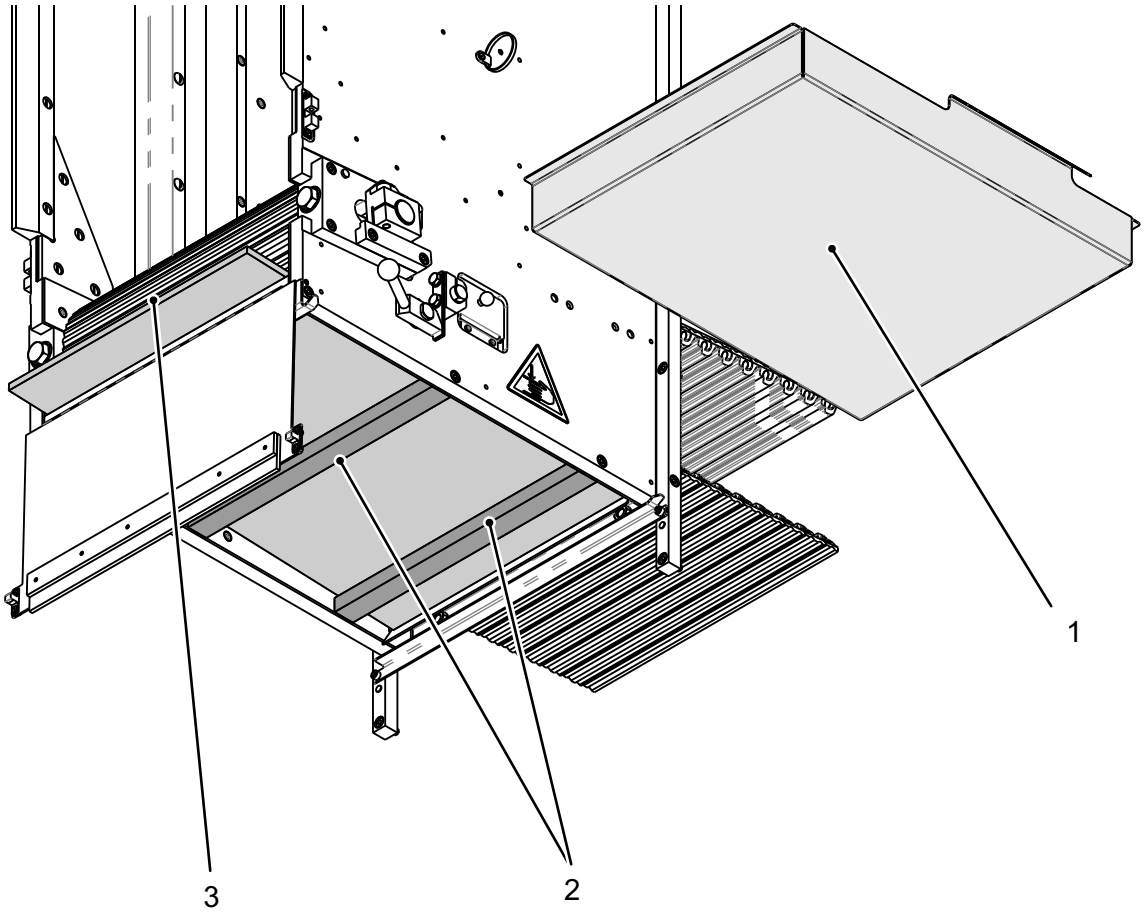

Fig. 10 *(0592_K100HWR.z.00043.00.svg)*

4. Remove the drawer *(Fig. 10-1)* and place the auxiliary plate *(Fig. 10-3)* (included in the accessories kit) on the cross-ties *(Fig. 10-2)* of the extension.

   This ensures that the lower conveyor chain does not get caught between the cross-members of the extension when the chain is removed.

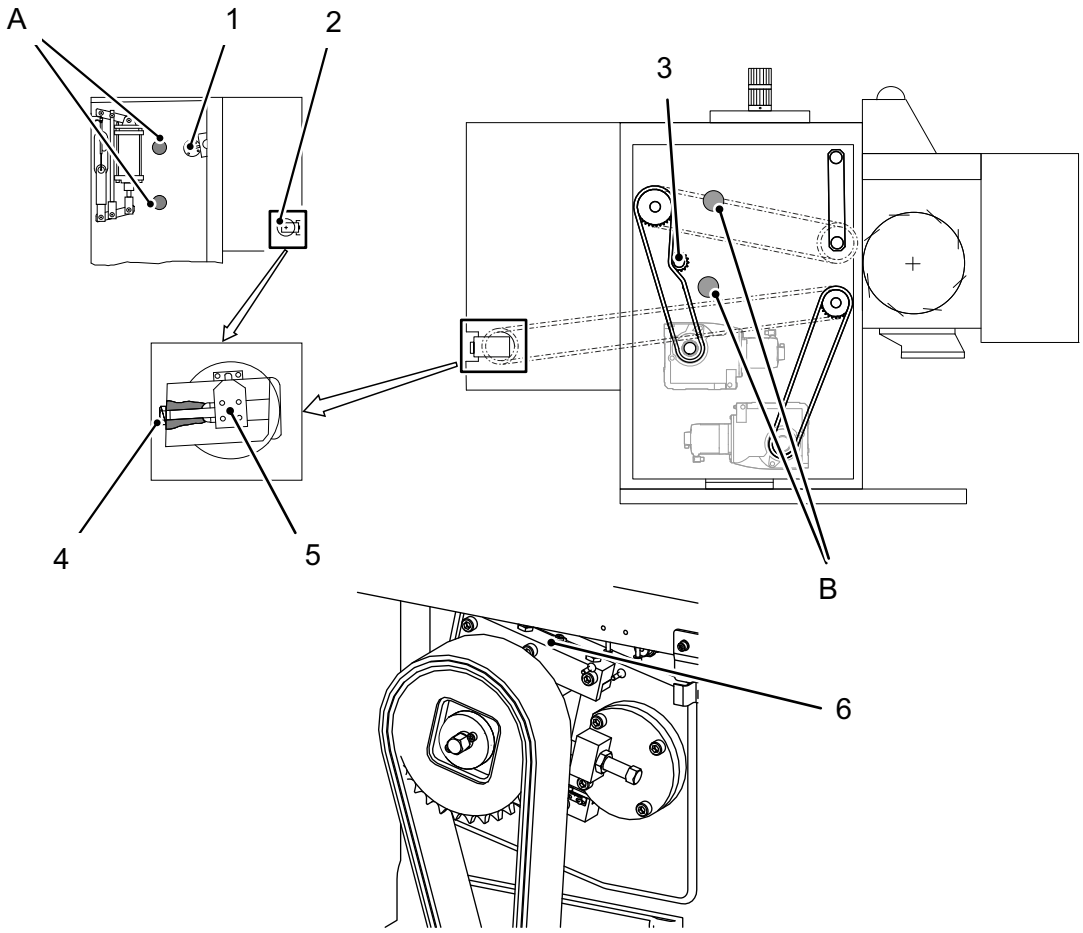

Fig. 11 Replacing the conveyor chain (0592_K100HWR.z.00044.00.svg)

5. Release the clamp screws *(Fig. 11-5)* on the lower conveyor chain.
6. Release the clamp screws *(Fig. 11-6)* on the clamp element of the upper conveyor chain.
7. Release the roller chain of the upper chain conveyor with the chain tensioner *(Fig. 11-3)* (see section **"Roller chains – checking the tension and retensioning"** (↑ 3-6)).
8. Adjust the tension of the upper conveyor chain with tensioning screws *(Fig. 11-1)*.
9. Adjust the tension of the lower conveyor chain with tensioning screws *(Fig. 11-4)*.
10. Place a wooden plank on the lower conveyor chain to support the upper conveyor chain.
11. Remove the covers from the assembly openings *(Fig. 11-A/B)*.
12. Press one chain link approx. one third into the assembly openings using a hard wooden block to secure the conveyor chain against slipping out.

⚠ WARNING

Risk of injury due to slipping conveyor chain!
After complete removal of the first conveyor chain link, the unsecured end of the chain slips from the guide roller and falls onto the previously inserted wooden plank.

- Proceed with extreme caution.
- Before removing the first chain link, ensure that nobody can be injured by the falling conveyor chain.

Then press the neighbouring chain link out completely through the assembly opening.

13. Take the conveyor chains off one at a time as follows:
    - Push the upper section of the upper conveyor chain in the direction of the mouthpiece and remove it in groups of up to 10 chain links. Carefully pull out the lower section of the upper conveyor chain.
    - Then push the upper section of the lower conveyor chain in the direction of the tobacco feed and remove it in groups of up to 10 chain links. Carefully pull out the lower section of the lower conveyor chain.

Information
If the conveyor chain cannot be pulled out by hand, you can turn the shaft via the hexagon head on the shaft to move the chain.

Information
Once you have removed about half the conveyor chain links, you can hold the remaining chain links firmly by hand to prevent them from slipping as the conveyor chain links are no longer engaged at the drive shaft.

3.3.2.3 Fitting the conveyor chain wheel

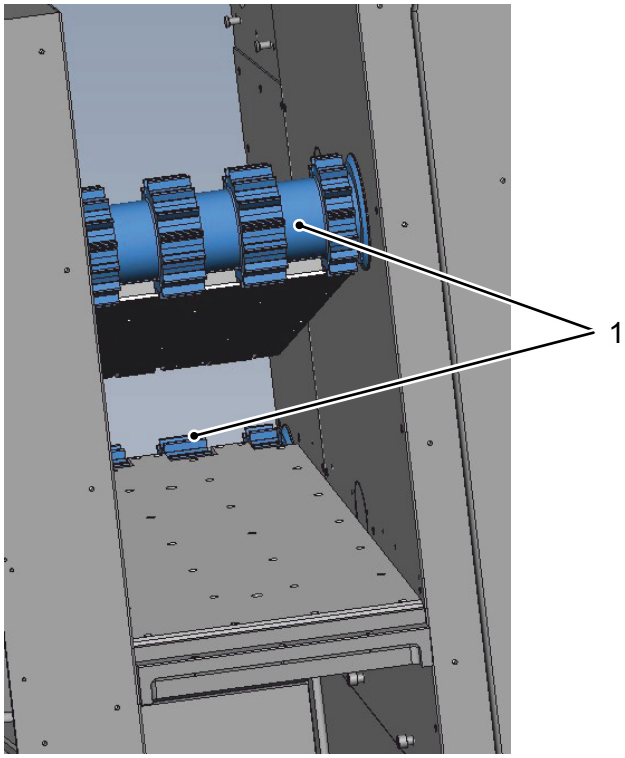

Fig. 12 *(0592_K100HWR.z.00058.00.svg)*

Information
As a rule, chain wheels *(Fig. 12-1)* should not be removed for cleaning. They should be cleaned in a fitted state.

NOTICE

There is a risk of machine damage.
If you do remove the chain wheels, observe the steps listed below to prevent damage to the machine.

Information
If the roller chain was opened at the chain connecting link and the plate was not removed, there is no need to take further measures. The chain wheel can be fitted centrally in the cutter's chute.

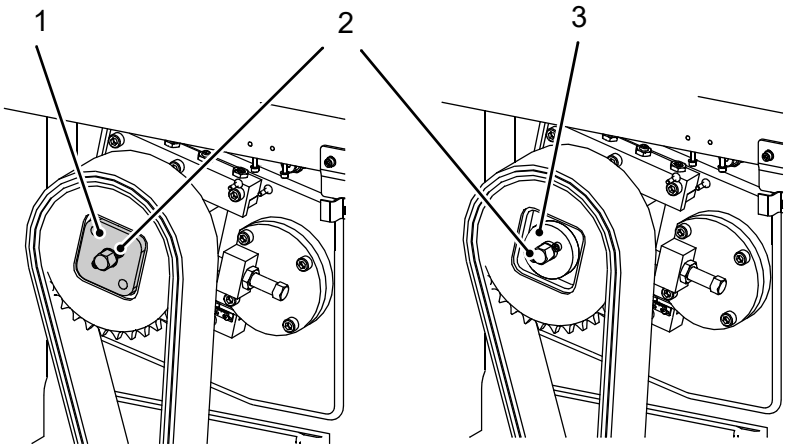

Fig. 13 *(0592_K100HWR.z.00005.00.cgm)*

Prerequisites

- ✓ Chain wheel *(Fig. 12-1)* has been removed and cleaned.
- ✓ Drive shaft *(Fig. 13-2)* has been cleaned.
- ✓ Auxiliary part on the chain wheel has been fitted correctly (↑ 3-13).

NOTICE

Risk of machine damage!
If the auxiliary part *(Fig. 13-3)* is not fitted, the drive shaft may not be in its correct position. This can cause damage to the machine.

The auxiliary part must always be fitted as soon as the plate *(Fig. 13-1)* is removed.

Procedure

1. Centre the chain wheel *(Fig. 12-1)* in the chute and secure it.
2. Turning the drive shaft by hand using the hexagon head on the shaft, check whether the chain wheel runs centrally in the chute.

3.3.2.4 Fitting the conveyor chain

Fitting the lower conveyor chain

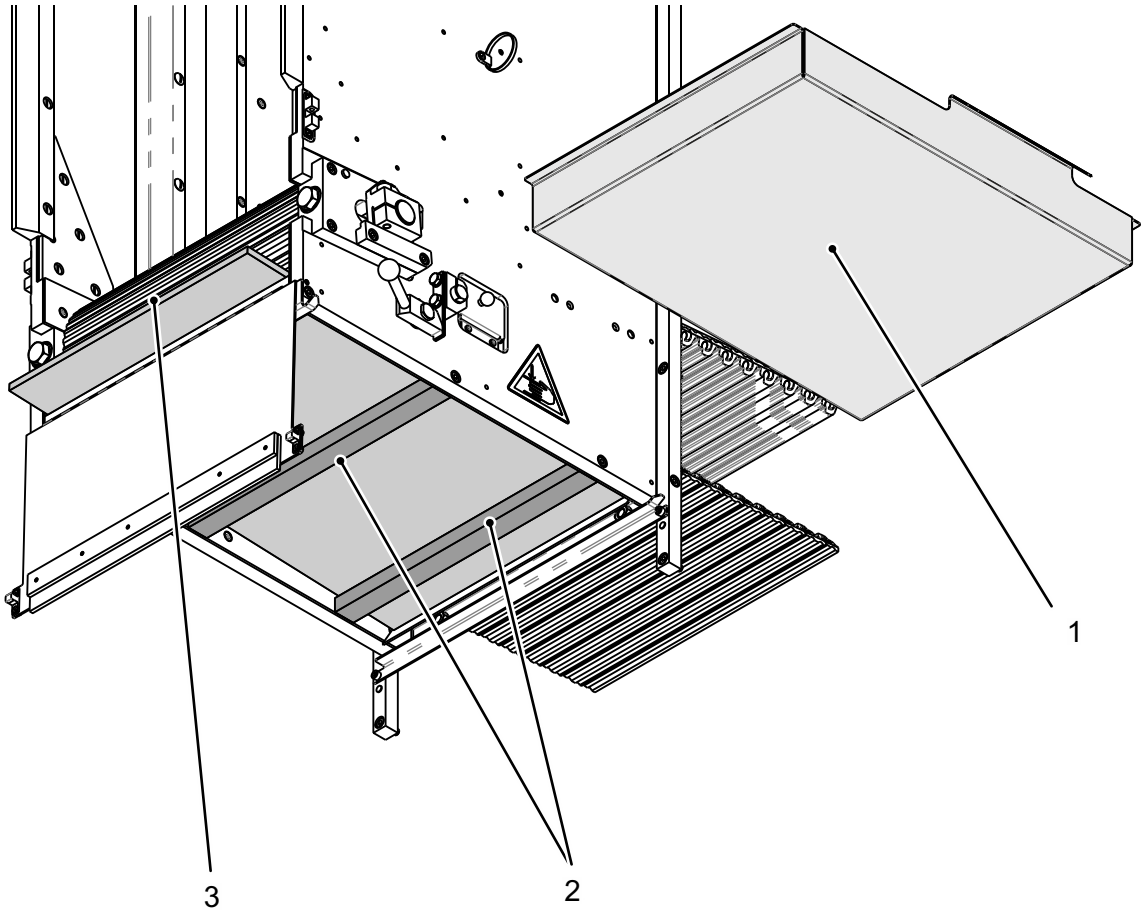

Fig. 14 *(0592_K100HWR.z.00043.00.svg)*

Prerequisites

✓ Chain link joints have been lubricated (for greases suitable for lubricating see the section headed "**Lubricants**" (↑ 2-9))

Procedure

1. Remove the drawer *(Fig. 14-1)* and place the auxiliary plate *(Fig. 14-3)* (included in the accessories kit) on the cross-ties *(Fig. 14-2)* of the extension.

   This ensures that the lower conveyor chain does not get caught between the cross-members of the extension when the chain is being fitted.
2. Join the chain links in groups of 10.
3. Push the auxiliary chain link fragment tool included in the accessories kit onto the first chain link and attach a rope.

   This auxiliary tool facilitates holding the chain.

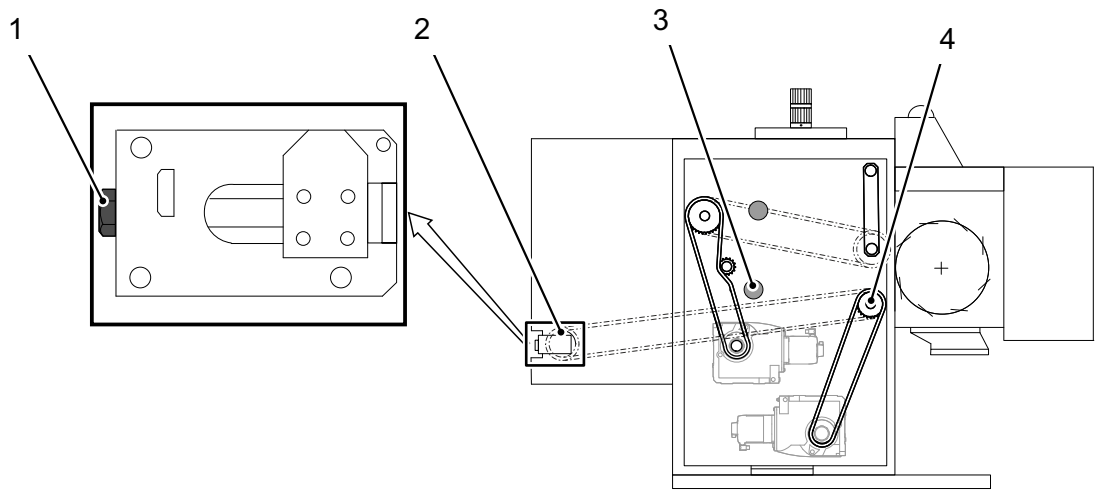

Fig. 15 Fitting the lower conveyor chain (0592_K100HWR.z.00006.01.svg)

4. Place an assembled chain link group at the guide roller *(Fig. 15-2)* into the trough.
5. Pull the conveyor chain through the mouthpiece opening onto the drive roller *(Fig. 15-4)* step by step and guide it around it. While you are pulling, feed in the assembled groups of chain elements in turn and join them to the section of the chain being pulled forward with a chain link pushed in through the assembly opening. Then guide the chain around the drive roller *(Fig. 15-4)* to the guide roller *(Fig. 15-2)*.

Information
If the conveyor chain cannot be pulled in by hand, you can turn the shaft via the hexagon head on the shaft to move the chain.

6. Once you have placed the chain around the guide roller *(Fig. 15-2)* up to the assembly opening *(Fig. 15-3)*, remove the auxiliary device.
7. Push the first chain link part of the way into the assembly opening to prevent the chain slipping back.
8. Move the chain by turning the drive roller backwards until both ends of the chain are located in front of the assembly opening *(Fig. 15-3)*.
9. Close the conveyor chain by pushing in the last chain link.
10. Remove the auxiliary plate *(Fig. 14-3)*. Replace the drawer *(Fig. 14-1)* under the extension.
11. Tension the conveyor chain on both sides using the tensioning screws *(Fig. 15-1)*.
12. Remove the auxiliary part *(Fig. 8-3)* and refit the plate to establish the positive-locking connection between the shaft and the drive wheel.

Use the hexagon head on the shaft to turn the shaft so that the plate can be fitted. Alternatively, close the chain with the connecting links.

Place the auxiliary parts in their storage location.

⚠ CAUTION

Risk of damage to equipment due to increased wear
Sluggishness when pushing in the chain links can result in increased wear.

Ensure that the individual chain links can be pushed easily into one another.

Fitting the upper conveyor chain

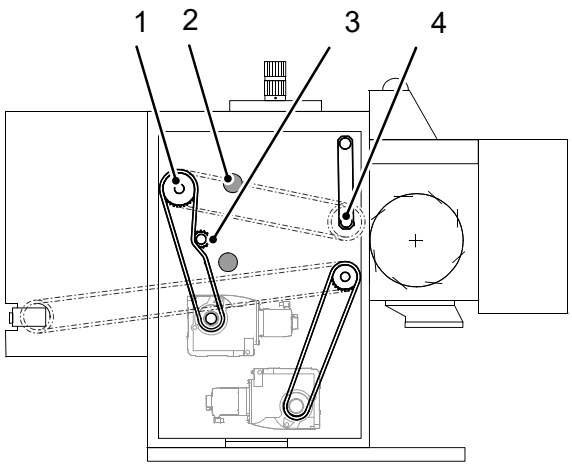

Fig. 16 Fitting the upper conveyor chain (0592_K100HWR.z.00007.00.cgm)

Prerequisites

✓ Chain link joints have been lubricated (for greases suitable for lubricating see the section headed "**Lubricants**" (↑ 2-9)

Procedure

1. Join the chain links in groups of 10.
2. Push the auxiliary chain link fragment tool included in the accessories kit onto the first chain link and attach a rope.

   This auxiliary tool facilitates holding the chain.

Information
Place a wooden plank on the lower conveyor chain to prevent the two conveyor chains becoming "entangled".

3. Working from the infeed end, place the assembled groups of chain links on the pivot mounting (not shown in the drawing) and join them. Always push a few of the links which have just been connected to the side to prevent the conveyor chain from slipping out towards the front.
4. Place the chain links onto and around the front guide roller *(Fig. 16-4)*. Joining up groups of chain elements, use the rope to pull them underneath the pivot mounting towards the rear

and place them around the drive roller *(Fig. 16-1)*. Push the last chain link outwards to the side through the assembly opening to prevent the chain from slipping out.

5. Turn the drive roller *(Fig. 16-1)* clockwise (backwards) until both ends of the conveyor chain meet in front of the assembly opening *(Fig. 16-2)*. Close the conveyor chain by pushing in the last link.
6. Remove the wooden board and tension the upper conveyor chain.
7. Tension the roller chain with the chain tensioner *(Fig. 16-3)* (see the section headed **"Roller chains – checking tension and retensioning"** (↑ 3-6)).
8. Remove the auxiliary part *(Fig. 8-3)* and refit the plate to establish the positive-locking connection between the shaft and the drive wheel.

   Use the hexagon head on the shaft to turn the shaft so that the plate can be fitted. Alternatively, close the chain with the connecting links.

   Place the auxiliary parts in their storage location.

⚠ CAUTION

Risk of damage to equipment due to increased wear
Sluggishness when pushing in the chain links can result in increased wear.

Ensure that the individual chain links can be pushed easily into one another.

3.3.2.5 Follow-up work

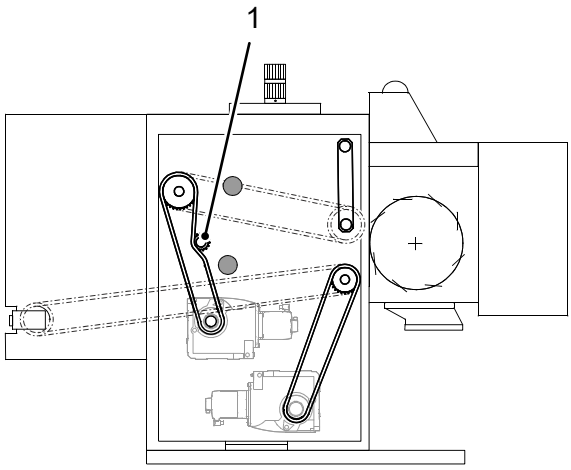

Fig. 17 Follow-up work after chain replacement (0592_K100HWR.z.00008.00.cgm)

Procedure

1. Tension the upper roller chain with the chain tensioner *(Fig. 17-1)* (see the section headed **“Roller chains – checking tension and retensioning”** (↑ 3-6)).
2. Refit the mouthpiece (see section "**Removing and fitting the mouthpiece**" (↑ 3-77)).
3. Check the tension of the lower roller chain and retension as necessary (see section **“Roller chains – checking the tension and retensioning”** (↑ 3-6)).
4. Only for KT 2 - L160:

   Check the transfer between conveyor chain and pre-compactor, and readjust if necessary (see section **“Checking and adjusting transfer between pre-compactor and tobacco cutter”** (↑ 3-99)).

3.3.2.6 Oil change: conveyor chain drives (motors M3 and M4)

Recommended oil types for the gear units are listed in the Lubricants chapter (↑ 2-9).

Quantity of oil required:

- M3/MA3 (lower conveyor chain): approx. 9.1 l
- M4/MA4 (upper conveyor chain): approx. 3.5 l

Information
Only carry out an oil change when the gear unit is at working temperature, since insufficient flowability due to the oil being cold makes completely emptying difficult.

If the waste oil has a high degree of contamination (e.g. as a result of deposits), the gear housing should be flushed out. To do this, only use the oil type to be filled in.

Information
Synthetic lubricants must neither be mixed with other types of synthetic lubricants nor with mineral lubricants! If, during refilling, you are unable to determine with certainty which oil type was last used, drain the old oil completely and replace it with an oil that meets the specifications listed in the "**Lubricants**" chapter (↑ 2-9).

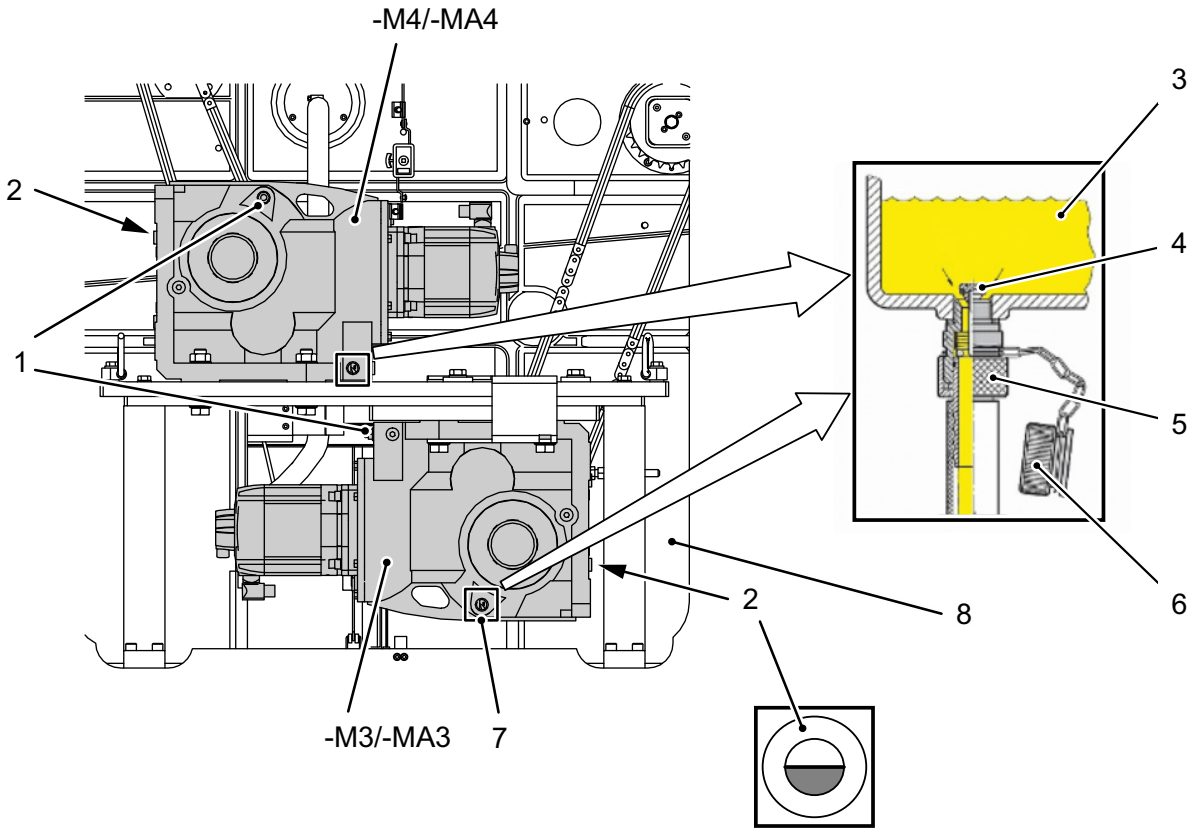

Fig. 18 Oil change *(0592_K100HWR.z.00009.01.svg)*

Required

- Oil collecting container
- Funnel, mirror

Information
Due to the design of the gear unit, the oil-gauge windows are not visible from the front. The oil level can be determined using a small mirror. A hole is provided in the motor holder *(Fig. 18-8)* for motor M3 / MA3 to allow the oil-gauge window to be viewed.

Procedure to change the oil

1. Switch off main switch (-Q01/-QA0).
2. Remove the filler screw *(Fig. 18-1)*.
3. Remove the protecting cap *(Fig. 18-6)* and screw the drain hose (contained in accessories kit) *(Fig. 18-5)* to the oil drain valve *(Fig. 18-7)*.

   The connecting piece of the oil drain hose opens the drain valve *(Fig. 18-4)* and the waste oil *(Fig. 18-3)* can flow into the collecting container provided for this purpose.
4. Once the waste oil has been drained, remove the drain hose and screw the protecting cap on again.
5. Fill oil through the filler opening (up to the middle of sight glass *(Fig. 18-2)*).
6. Screw the filler screw *(Fig. 18-1)* back in.

3.3.2.7 Replacing the flanged wheels

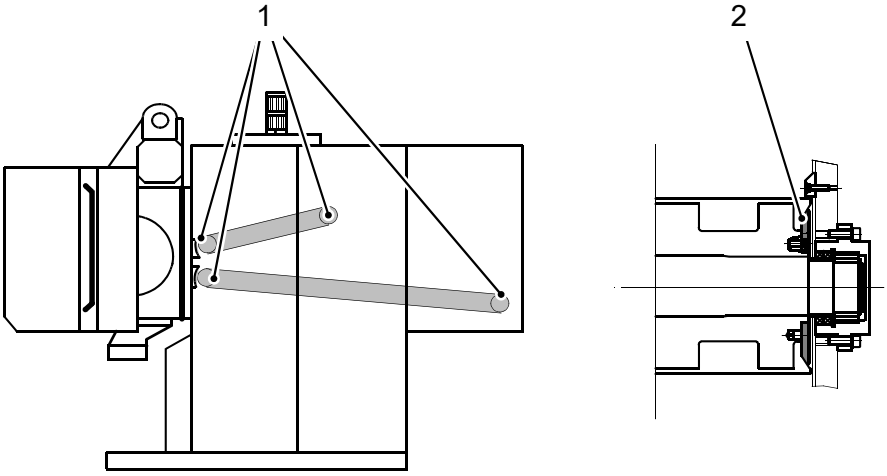

Fig. 19 Replacing: flanged wheels (0590_Bordsch.z.00000.00.cgm)

The flanged wheels *(Fig. 19-2)* for aligning the conveyor chains are wearing parts and have to be replaced from time to time.

In addition, the fixing screws of the flanged wheels must be secured with a medium-strength thread-locking agent (e.g. Loctite 243) to prevent them from loosening by themselves during machine operation.

For information about securing screw connections, refer to the "**Thread-locking fluid**" (↑ 2-11) chapter.

Information
To access the flanged wheel, the guide rollers have to be removed.

For details, see section **“Removing the upper and the lower conveyor chain”** (↑ 3-13) and **“Fitting the conveyor chain wheel”**. (↑ 3-18)

Procedure

1. Unscrew worn flanged wheels *(Fig. 19-2)* at the guide rollers *(Fig. 19-1)* and remove residual thread-locking agent from the screw holes.
2. Fit new flanged wheels with fixing screws. When doing this, apply a medium-strength thread-locking agent (e.g. Loctite 243) to the screws.

Information
For fitting the guide rollers with flanged wheel, see section **“Fitting the conveyor chain wheel”** (↑ 3-18)

3.3.3 Cleaning

3.3.3.1 Standard cleaning of the conveyor chains

The conveyor chains must be cleaned after every shift and at least once a day at a minimum (after end of production).

Use brushes and non-metallic scrapers that do not damage the chains to do this.

To gain access to the conveyor chains, you must move out the SRB compacting trough first.

During cleaning, it is necessary to briefly switch on the conveyor chains in manual mode to allow them to be moved on section by section.

- Move forwards in jog mode.
- Move backwards in continuous mode.

⚠ WARNING

Danger posed by moving/rotating parts
Limbs, clothing or hair getting caught in moving components may result in death, serious physical injury or damage to machinery.

- Particular care must be taken when performing these tasks.
- Only specially trained staff may clean the conveyor chains
- Keep all body parts away from the conveyor chains when they are switched on
- Make sure that your clothing or hair cannot get caught in rotating parts
- Wear a hard hat and suitable safety clothing and be particularly careful to avoid crushing injuries to the upper extremities/head

Information
If necessary, the conveyor chains must be removed and thoroughly cleaned, see the next chapter.

3.3.3.2 Cleaning the conveyor chains off the machine

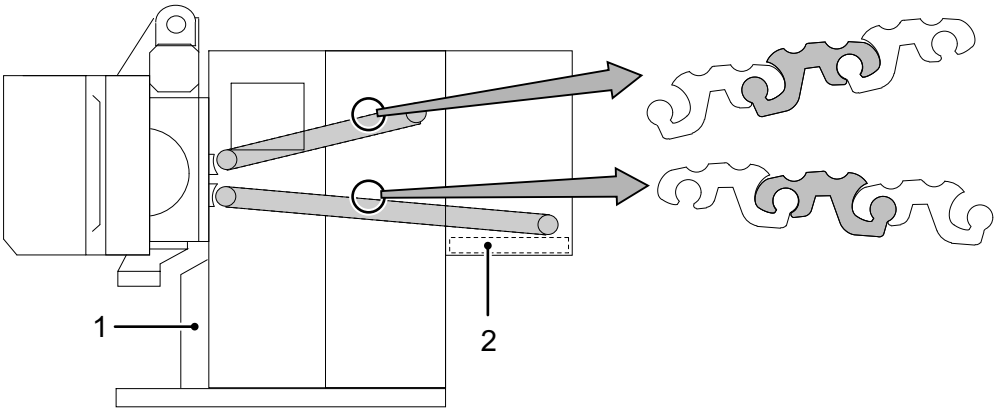

Fig. 20 1: Dust collection box 2: Drawer (0592_K100HWR.z.00060.00.svg)

Procedure

1. Before the conveyor chains can be thoroughly cleaned, they must be removed from the machine; see section **“Removing the upper and lower conveyor chain”** (↑ 3-13).
2. Then strip down the conveyor chains into individual chain links *(Fig. 20)*.
3. Soak the chain links in hot soapy water until the hardened tobacco and casing deposits are dissolved.
4. Clean the chain links with a hard brush, rinse them in fresh water and dry them.
5. Also clean the drive and guide rollers as well as the supports for the two conveyor chains.
6. After cleaning, reassemble the conveyor chains; see sections **“Fitting the lower conveyor chain”** (↑ 3-20) and **“Fitting the upper conveyor chain”** (↑ 3-22).

3.4 Knife drum

⚠ WARNING

Risk of injury presented by extremely sharp knives!
The knives are extremely sharp and can cause extremely serious cutting injuries.

- For all work on the knife drum or knives, cut resistant gloves (cut resistance level 5) and protective footwear must be worn.
- Be particularly careful when working near the knives and the mouthpiece and when replacing the knives.
- Work on the knife drum may only be carried out with the knife drum brake activated.
- Only turn the knife drum against the working direction. To do so, briefly release the brake and reactivate it after turning.
- For work in the tobacco discharge zone, the cutter head must be covered with the safety cover plate provided.

⚠ CAUTION

Injury and damage to machinery due to crushing!
There is a risk of being trapped when the cutter head is closed.

- Make sure the area between cutter head and main compactor is free of obstructions when closing (e.g. safety cover plate).
- Before closing the cutter head, ensure that all loose objects have been removed.

Information
The knife drum can be manually turned and locked (braked). This is necessary for some service work (e.g. knife replacement).

Cutter head control panel

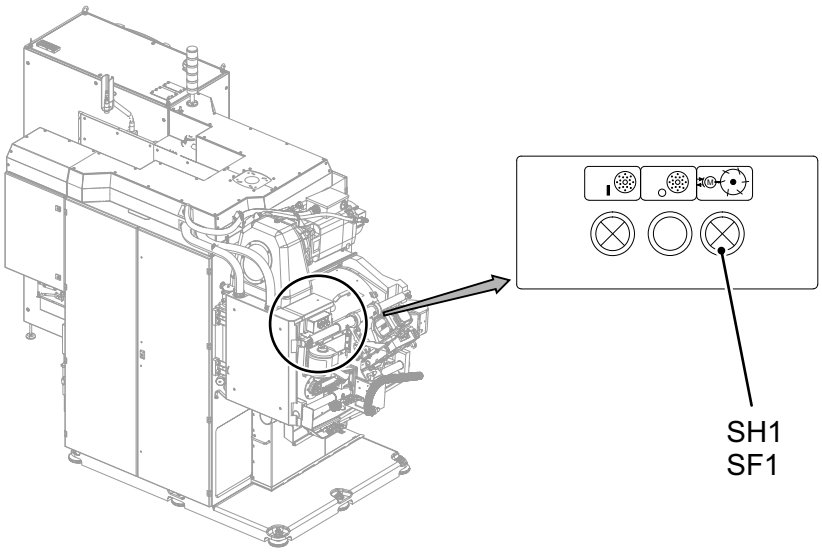

Fig. 21 Knife drum control panel (0592_K100HWR.z.00061.00.svg)

The control panel for the cutter head is only accessible when the knife drum hood is open.

Press button (-SH1 / SF1)

Pressing the button *(Fig. 21-SH1 /SF1)* applies the knife drum brake; the pilot lamp lights up.

Press button (-SH1 / SF1) again

Pressing the button again releases the knife drum brake again and the pilot lamp goes out.

3.4.1 Setting

3.4.1.1 Knife adjustment

⚠ WARNING

Risk of injury presented by sharp knives
You could cut yourself.

Always wear cut resistant gloves (cut resistance level 5) and protective footwear when working on the knives of the knife drum.

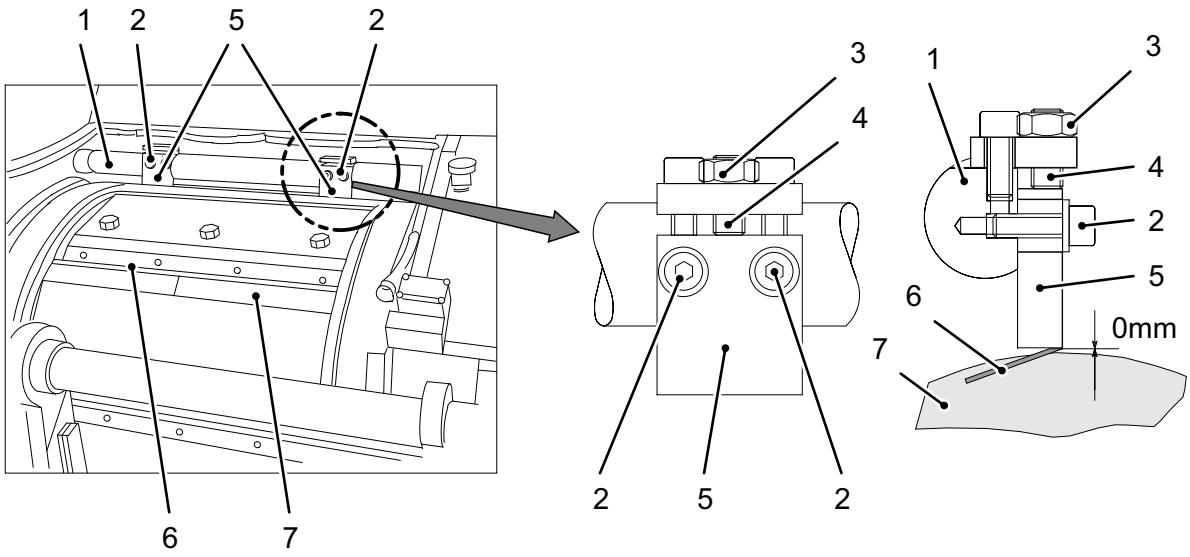

Fig. 22 *(0592_K100HWR.z.00063.00.svg)*

Information
Before changing the knives, check the knife adjustment unit for the correct distance from the knife. To do this, swing down the knife adjustment unit and readjust it if necessary. The same applies when replacing the bottom knife bar.

Knife adjustment

1. Swing down the knife adjustment unit *(Fig. 22-1)*.
2. Release the screws *(Fig. 22-2)*.
3. Release the locknut *(Fig. 22-3)* on both adjuster screws *(Fig. 22-4)*.
4. Place the adjuster blocks *(Fig. 22-5)* on the knife using the adjuster screw *(Fig. 22-4)*. Hand-turn the knife drum slightly forwards and backwards.
5. Tighten the screws *(Fig. 22-2)*.
6. Lock the adjuster screws *(Fig. 22-4)* in position.
7. Swing up the knife adjustment unit.

3.4.1.2 Setting the knife advance

⚠ WARNING

Danger of injury!
Be careful your fingers do not get crushed when you adjust the knife advance.

Be particularly careful and wear protective gloves!

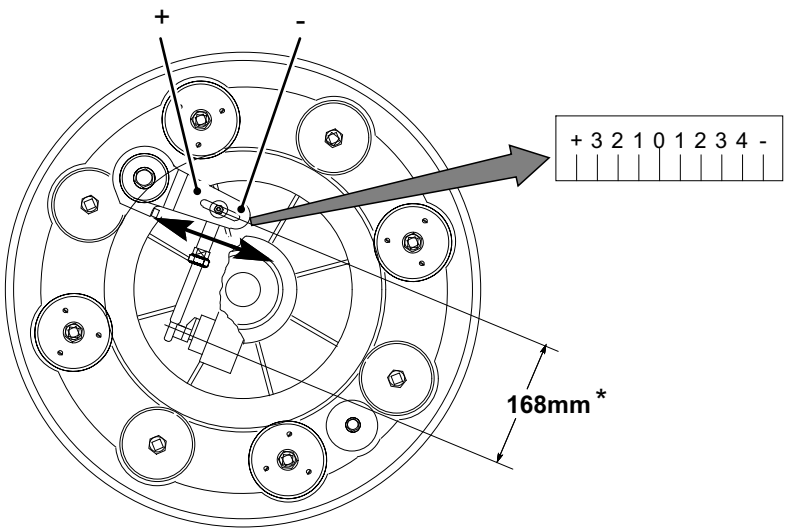

Fig. 23 Adjusting knife advance (0592_K100HWR.z.00073.00.svg)

The knife advance is set mechanically. It can be adjusted in the range from -5 to +4 via a scale *(Fig. 23)*.

Adjusting knife advance

- Moving in the "+" direction increases the knife advance distance.
- Moving in the "-" direction reduces the knife advance distance.

In the standard version, the scale range from -5 to +4 theoretically corresponds to a knife advance of approx. 6.2 to 9.2 mm per 100,000 revolutions of the drum. This means moving by one scale mark corresponds to a knife advance of 0.33 mm per 100,000 revolutions of the drum.

Information
Depending on the type of knife advance gear unit fitted (↑ 3-33), the scale range from -5 to +4 can also correspond to another knife advance:

- Knife advance +25% (optional) corresponds to a theoretical knife advance of 7.8 to 11.5 mm (per scale mark = 0.41 mm)
- Knife advance +50% (optional) corresponds to a theoretical knife advance of 9.3 to 13.8 mm (per scale mark = 0.5 mm)

The theoretical knife advance can differ from the actual knife advance, however, due to tolerances.

* Replacing parts of the lever for the knife advance

When replacing parts of the lever for the knife advance attention must be paid that the normal distance is 168 mm *(Fig. 23)*. The axle of the con rod must be at right angles to the axle of the ball joint. The distance can be set by adjusting the ball joint (when removed). Then secure in this position using a locknut.

3.4.1.3 Changing the knife advance gear unit

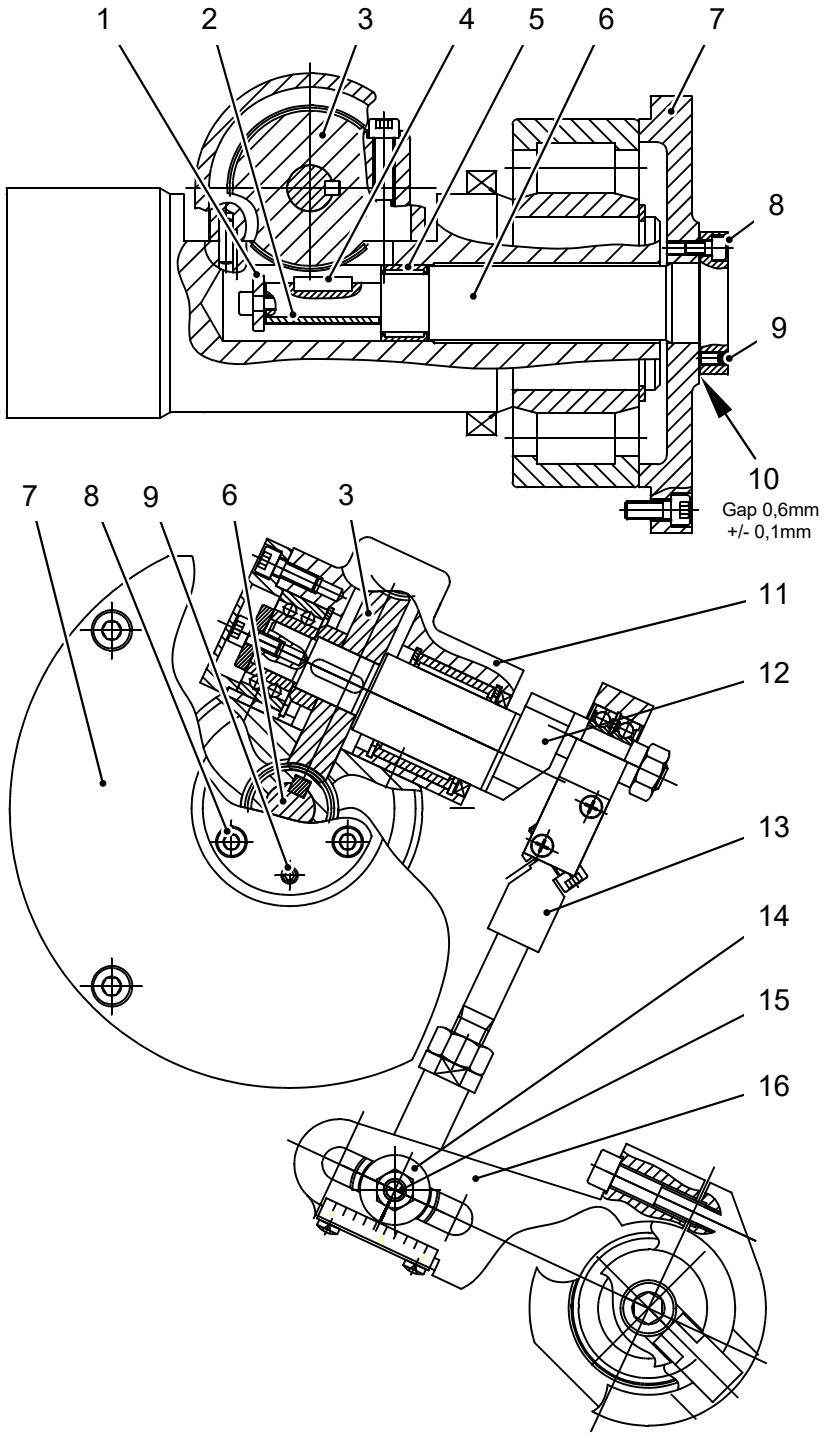

Fig. 24 Knife advance gear unit (0590_trom_2015.s.00000.00.cgm)

Explanation of illustration

- *(Fig. 24-1)* Washer
- *(Fig. 24-2)* Worm
- *(Fig. 24-3)* Worm wheel
- *(Fig. 24-4)* Feather key
- *(Fig. 24-5)* Needle bearing
- *(Fig. 24-6)* Shaft

- *(Fig. 24-7)* Cover
- *(Fig. 24-8)* Fixing screws
- *(Fig. 24-9)* Setscrew
- *(Fig. 24-10)* Gap 0.6 mm ±0.1 mm
- *(Fig. 24-11)* Housing
- *(Fig. 24-12)* Eccentric shaft
- *(Fig. 24-13)* Lever on the eccentric shaft
- *(Fig. 24-14)* Washer_2
- *(Fig. 24-15)* Hex. nut
- *(Fig. 24-16)* Lever on the freewheel

Information
There are three different types of knife advance gear units (↑ 3-31):

- Standard
- +25% (optional)
- +50% (optional)

The knife advance gear unit consists of the worm *(Fig. 24-2)* and the worm wheel *(Fig. 24-3)* with the corresponding washer *(Fig. 24-1)* and feather key *(Fig. 24-4)*.

Depending on the knife advance required, the parts must be replaced.

Replacing the worm

Procedure for replacing the worm:

1. Release the fixing screws *(Fig. 24-8)* on the shaft *(Fig. 24-6)*.
2. Pull off the shaft, together with the worm wheel *(Fig. 24-3)* and the washer *(Fig. 24-1)*. The setscrews *(Fig. 24-9)* can initially be used as forcing screws.
3. Then turn the setscrews back so that they do not project from the contact surface of the shaft.
4. Dismantle the subassembly you have removed and replace parts.
   - For +25% gear units, the worm *(Fig. 24-2)* and the worm wheel *(Fig. 24-3)* must be replaced.
   - For +50% gear units, the worm *(Fig. 24-2)* and the worm wheel *(Fig. 24-3)* must be replaced as well as the washer *(Fig. 24-1)* and the feather key *(Fig. 24-4)*.
5. Lubricate and assembly the subassembly.
6. Push the shaft *(Fig. 24-6)*, together with the fitted parts, into the knife drum until the contact surface of the shaft makes full contact with the cover *(Fig. 24-7)* of the cutter head frame.
7. Turn the setscrew *(Fig. 24-9)* clockwise until a uniform circumferential gap *(Fig. 24-10)* between the contact surface of the shaft and the cover on the knife head frame of 0.6 mm ±0.1 mm is obtained.
8. Use a feeler gauge to check the gap *(Fig. 24-10)*.

9. Tighten the fixing screws *(Fig. 24-8)* on the shaft.

NOTICE

Damage to machinery possible!
Incorrect assembly will increase wear and reduce the service life of the bearings.

- The outer ring of the needle bearing *(Fig. 24-5)* must have play with respect to the shaft shoulder to ensure smooth running and thus a long service life of the bearing.
- The needle bearing *(Fig. 24-5)* bears on the shaft shoulder during assembly. Afterwards, pull the shaft *(Fig. 24-6)* backwards and set the required gap *(Fig. 24-10)*.

Replacing the worm wheel

Procedure for replacing the worm wheel:

⚠ WARNING

Risk of injury presented by sharp knives
The work required on the housing and on the levers is carried out through the flap on the cutter head frame *(Fig. 31-10)*, see the section headed **"Replacing the knives"** (↑ 3-44). The knife drum needs to be turned manually for this. You could cut yourself.

Always wear cut resistant gloves (cut resistance level 5) and protective footwear when working on the knife drum.

1. Remove washer_2 *(Fig. 24-14)* and the hex. nut to detach the lever on the freewheel *(Fig. 24-16)* from the lever on the eccentric shaft *(Fig. 24-13)*.
2. Remove the fixing screws from the housing.
3. Take out the housing *(Fig. 24-11)*, together with the worm wheel *(Fig. 24-3)*, eccentric shaft *(Fig. 24-12)* and lever, through the flap opening.
4. Disassemble the subassembly you have removed and replace the worm wheel.
5. Lubricate and assembly the subassembly.
6. Reaching through the flap opening, refit the subassembly to the knife drum and attach the lever on the eccentric shaft *(Fig. 24-13)* to the lever on the freewheel *(Fig. 24-16)* again.
7. Set the knife advance, see the section headed **"Setting the knife advance"** (↑ 3-31).

3.4.2 Knife drum: set-up tasks

3.4.2.1 Setting the bearing play of the knife drum

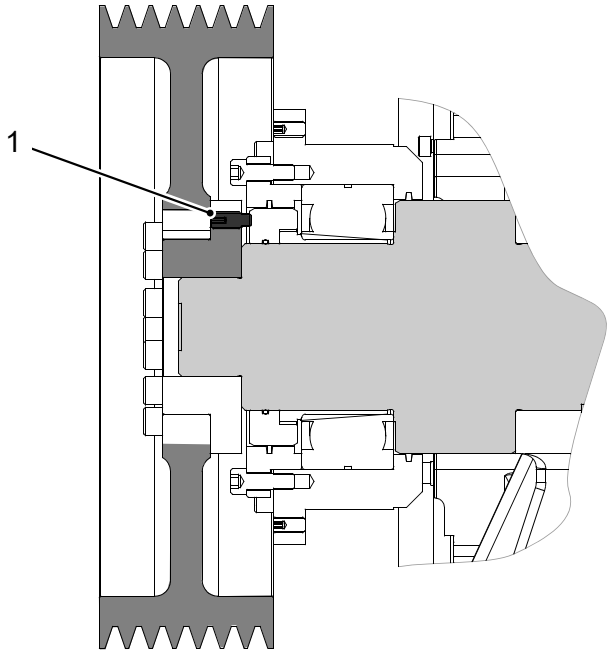

Fig. 25 Setting bearing play (0591_Lager-Sp.z.00000.00.cgm)

Bearing play

Set the knife drum bearing play to 0.03 - 0.04 mm on average. Turn the stud *(Fig. 25-1)* to adjust the bearing. Proceed as follows:

- Screw in the stud *(Fig. 25-1)* clockwise. This reduces bearing play.
- Screw out the stud *(Fig. 25-1)* counter-clockwise. This increases bearing play.

Procedure

1. Grease the bearing to facilitate replacement for maintenance purposes.
2. Before setting bearing play, turn the knife drum several times to align the bearing rings with the set of rollers.
3. Check bearing play with a feeler gauge (between relieved roller body and bearing outer race).
4. Repeat the measurement every 90° along the circumference.
5. Set the mean value of the individual measurements to 0.03-0.04 mm.

3.4.2.2 Operation with 2 or 4 knives

⚠ WARNING

Risk of injury presented by extremely sharp knives!
The knives are extremely sharp and can cause extremely serious cutting injuries.

Always wear cut resistant gloves (cut resistance level 5) and protective footwear when working on the knives of the knife drum.

⚠ WARNING

Risk of injury when accessing through the side flap in the cutter head frame
Improper access through the side flap can result in limbs being severely crushed or severed.

The side flap can only be opened with a tool.

⚠ CAUTION

Risk of injury when the knife drum turns unexpectedly (failure of the drum brake)
Minor crushing or cutting injuries may occur.

Always wear cut resistant gloves (cut resistance level 5) and protective footwear when working on the knives of the knife drum.

NOTICE

Cut quality
If the knives are arranged asymmetrically, unbalances and vibrations can result.

To achieve good cut quality, it is absolutely essential that the knives are arranged symmetrically.

Information
We recommend the cutter should be operated with 8 knives.

Operation with 2 or 4 knives can result in vibrations.

For operation with 2 or 4 knives, the free knife locations must be prepared accordingly.

Assignment of knife locations

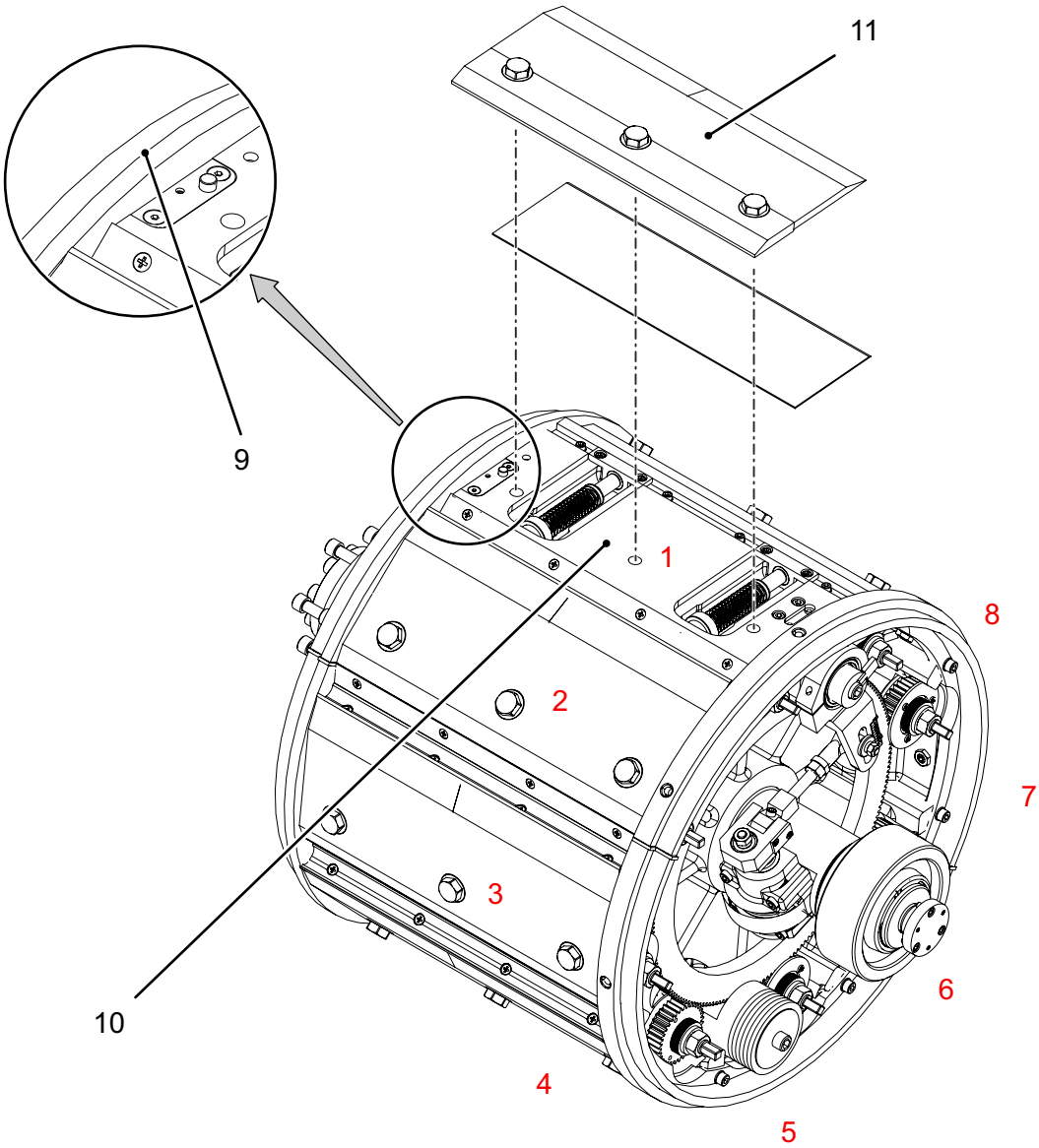

Fig. 26 *(0592_K100HWR.z.00076.00.svg)*

Knife location 1 *(Fig. 26-1)* must always be occupied. The effective length measuring unit is also located here. On the outside, a marking like e.g. "000" is visible at this point on the lateral ring *(Fig. 26-9)*.

When the clamp plate *(Fig. 26-11)* is removed, additional numbers punched into the drum body in the area of the carrier nut *(Fig. 26-10)* become visible. The knife locations are clearly defined by these numbers:

Number of knives	Knife location	Number *(Fig. 26-10)*
2	1	1;2
	5	9;10

Number of knives	Knife location	Number *(Fig. 26-10)*
4	1	1;2
	3	5;6
	5	9;10
	7	13;14

Preparing unoccupied knife locations:

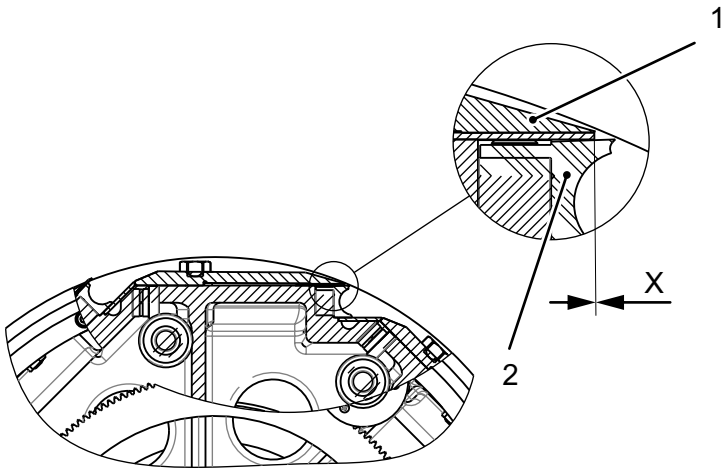

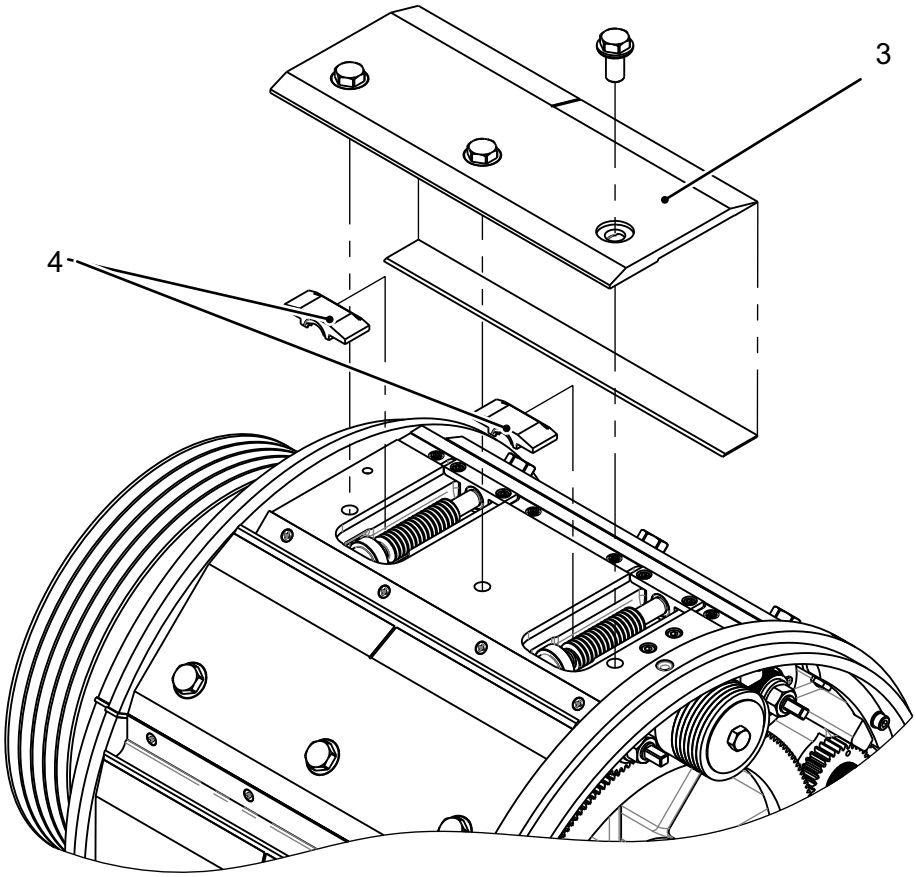

Fig. 27 *(0592_K100HWR.z.00042.00.svg)*

To prevent soiling of the knife advance mechanism, the following measures must be taken:

1. Take off the clamp plate *(Fig. 27-3)*.
2. Remove the carrier nuts *(Fig. 27-4)*.

3. Clamp the old knife or remains of the knife between the knife drum *(Fig. 27-2)* and the clamp plate *(Fig. 27-1)* with the cutting edge facing inside towards the threaded spindle. Pay attention that the edge of the knife is flush with the front edge of the clamp plate (X=0 *(Fig. 27)*).
4. Refit the clamp plate and tighten the collar screws to a torque of 180 Nm.

NOTICE

Risk of damage to the thread!
The thread could be damaged.

Do not tighten the screws with a power driver.

3.4.3 Knife drum: maintenance work

3.4.3.1 Checking and tensioning the V-belts/toothed belt

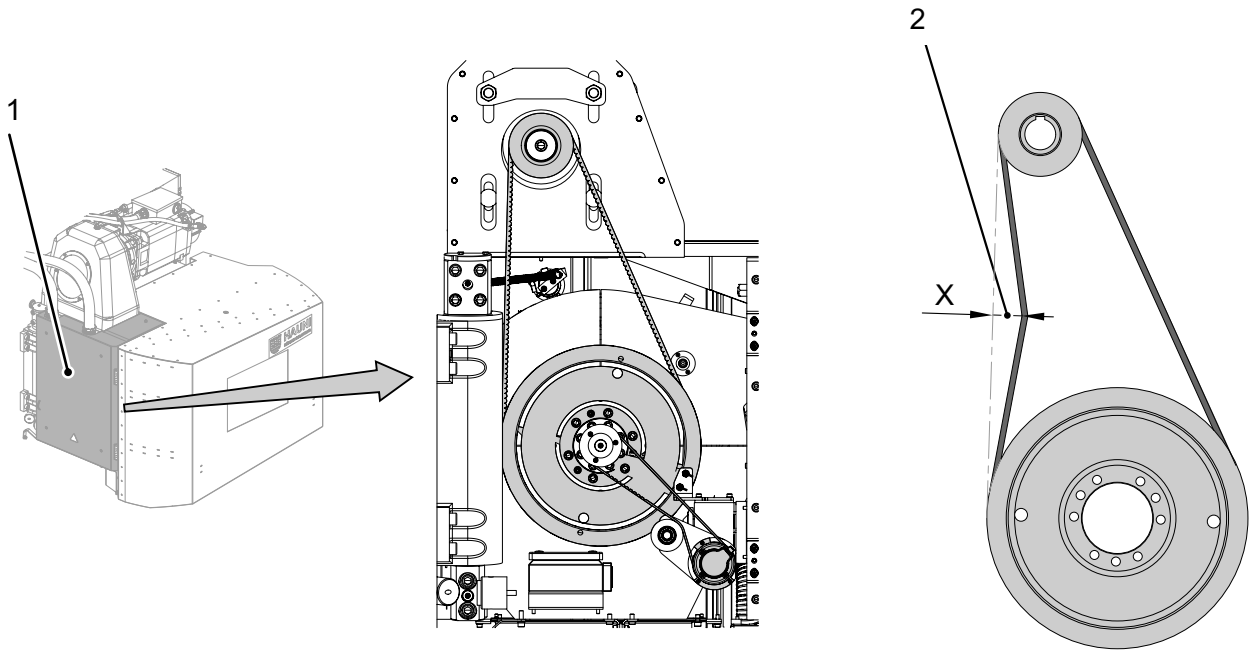

Fig. 28 Knife drum drive belt *(0592_K100HWR.z.00062.00.svg)*

Prerequisites

✓ The main switch (-Q01/-QA0) is switched off and secured to prevent it from being switched on again.

✓ All drives are stationary.

Checking the belts

1. Remove the guard *(Fig. 28-1)*.
2. Check belt tension with a suitable device (e.g. spring balance or frequency meter).

   Important! All belts must have the same tension.

Belt tension depends on the cutter type.

Type	Belts	Slack *(Fig. 28-X)* / test force	Frequency
L/S 80	V-belt (x5)	16 mm / 50 N	60 Hz
L/S 125	V-belt (x5)	12 mm / 50 N	70 Hz
L/S 160	Toothed belt (x1)	- / -	80 Hz

Information
Only one method should be used to measure belt tension. If sag is too high or the frequency is too low, the belts must be re-tensioned.

Tensioning the belts

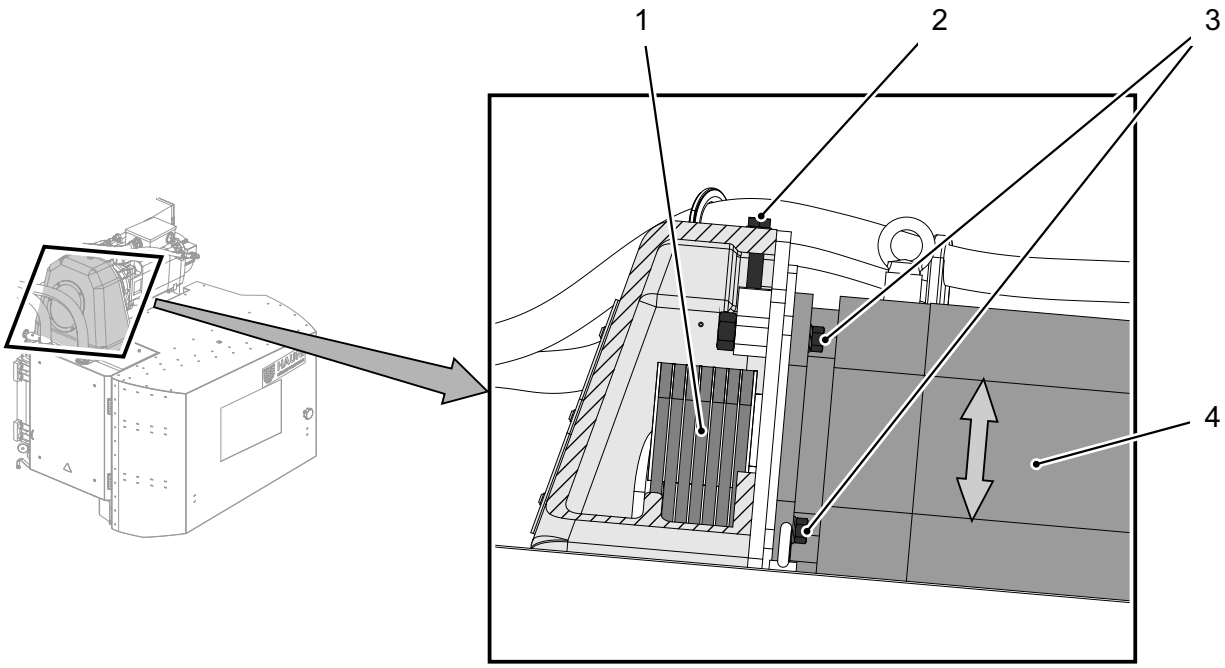

Fig. 29 Tensioning the belts (0592_K100HWR.z.00065.00.svg)

1. Remove the guard.
2. Release the nuts *(Fig. 29-3)*.
3. Turn the adjuster screw *(Fig. 29-2)* clockwise to raise the motor (-M1/-MA1) *(Fig. 29-4)*, thereby retensioning the belts *(Fig. 29-1)*.
4. Retighten the nuts *(Fig. 29-3)*.
5. Refit the guard.

3.4.3.2 Belt replacement

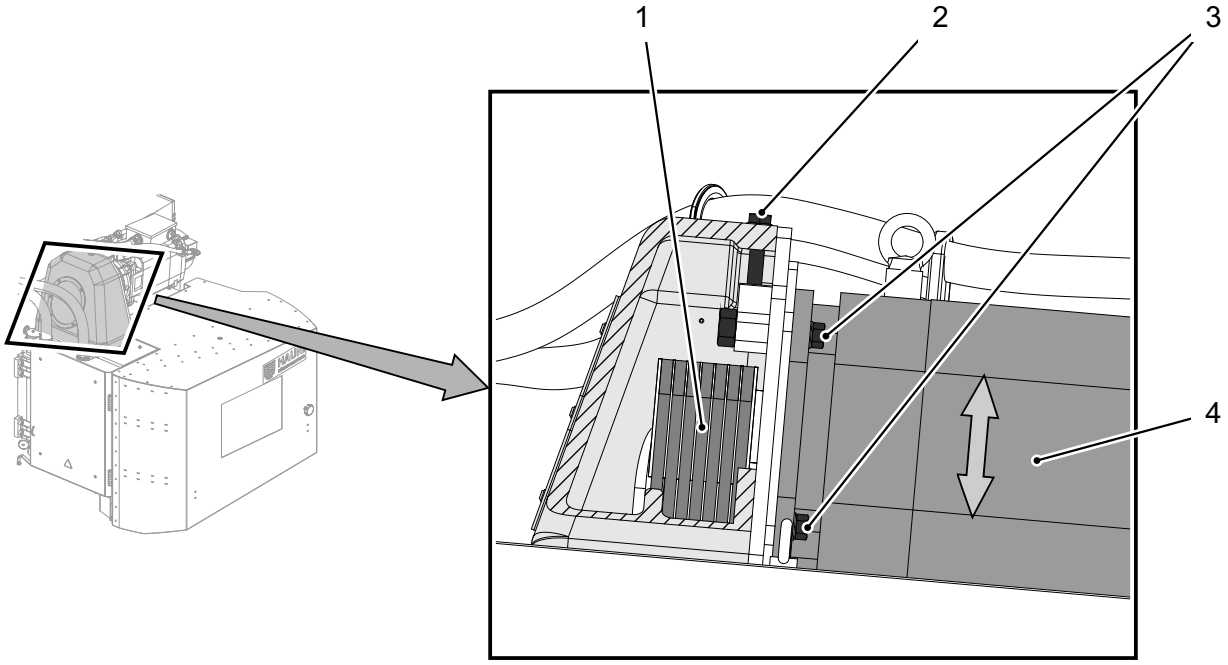

Fig. 30 Belt replacement (0592_K100HWR.z.00065.00.svg)

Prerequisites

- ✓ The main switch (-Q01/-QA0) is switched off and secured to prevent it from being switched on again.
- ✓ All drives are stationary.

Belt replacement

1. Remove the guard.
2. Release the nuts *(Fig. 30-3)*.
3. Turn the adjuster screw *(Fig. 30-2)* counterclockwise and lower the motor until the belt(s) *(Fig. 30-1)* can be pulled off.
4. Replace the used belts with new ones.
5. Turn the adjuster screw *(Fig. 30-2)* clockwise again to raise the motor (-M1/-MA1) *(Fig. 30-4)* in order to tension the new belts.
6. Retighten the nuts *(Fig. 30-3)*.
7. Refit the guard.
8. Check the belt tension after 0.5 – 4.0 hours of production (under full load) and retension if necessary (see the section headed **“Checking and tensioning the V-belts/toothed belt”** (↑ 3-41)).

3.4.3.3 Replacing the knives

⚠ WARNING

Risk of injury presented by sharp knives
You could cut yourself.

Always wear cut resistant gloves (cut resistance level 5) and protective footwear when working on the knives of the knife drum.

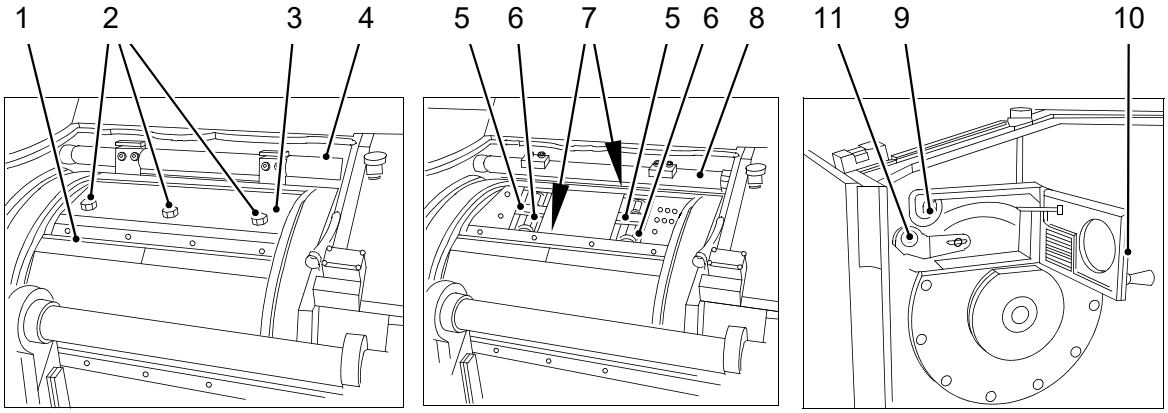

Fig. 31 *(0590_messer.z.00001.01.cgm)*

Replacing the knives

1. Switch off the main switch (-Q01) and padlock it to prevent it being switched on again.
2. Open the hood.
3. Remove the guard on the knife drum.
4. Turn the knife drum to the working position to gain access to the screws *(Fig. 31-2)*.

Information
Before changing the knives, check the knife adjustment unit for the correct distance from the knife. To do this, swing down the adjustment unit and readjust it if necessary (↑ 3-30). The same applies when replacing the bottom knife bar.

5. Press the button (-SH1 / SF1) on the cutter head control panel to activate the knife drum brake; the pilot lamp (-SH1 / SF1) lights up.
6. Remove 3 screws *(Fig. 31-2)*, the plate *(Fig. 31-3)*, the worn knife *(Fig. 31-1)* and the two carrier nuts *(Fig. 31-5)*.
7. Clean the spindles *(Fig. 31-6)*, the carrier nuts *(Fig. 31-5)* and the plates *(Fig. 31-3)*.

Information
The carrier nuts are numbered and are adjusted in pairs for each knife. Fit the carrier nuts to match the numbering on the knife drum.

8. Use a spatula to clean the concave rails *(Fig. 31-7)* located below the cutting edges of the knives.
9. Lightly grease the spindles *(Fig. 31-6)* for the carrier nuts *(Fig. 31-5)*. Turn back the carrier nuts to the beginning of the spindles. Both nuts must be set at the same height.
10. Turn back the carrier nuts to the beginning of the spindles. Both nuts must be set at the same height.
11. Insert a new knife. The knife back must rest against the carrier nuts *(Fig. 31-5)*. Put the plate *(Fig. 31-3)* in position. The plate must not wobble. Fit the crank on the square shaft *(Fig. 31-9)* and push it in to advance the knife with the aid of the crank until the plate *(Fig. 31-3)* is perfectly seated.
12. Tighten the screws *(Fig. 31-2)*. Tightening torque for the collar screws = 180 Nm.
13. Swing down the knife adjustment unit *(Fig. 31-8)*.
14. Press button (-SH1 / SF1) on the cutter head control panel to release the knife drum brake; the pilot lamp (-SH1 / SF1) goes out. Hand-turn the knife drum until the knife is located below the knife adjustment unit *(Fig. 31-8)*.
15. Cautiously turn the crank until the knife touches the knife adjustment unit. Remove the crank and swing up the knife adjustment unit.
16. Change the remaining knives in the same way.
17. Once all knives have been replaced, fit the socket wrench supplied in the accessories kit on the freewheel *(Fig. 31-11)* and carefully turn it clockwise. This advances all of the knives simultaneously until one of the knives touches the grinding wheel. Hand-turn the knife drum to and fro several times to check the adjustment.
18. Refit the guard on the knife drum.
19. Close the flap *(Fig. 31-10)*.
20. Close the hood.
21. Insert the sealing sponge into the mouthpiece. See manual **HBD.0590.xxx.xx**, chapter entitled "Sealing the mouthpiece".
22. Start grind-in mode on the operator unit. See manual **HBD.0590.xxx.xx**, chapter "Starting grind-in mode".
23. Touch the "+" function key to set the knife drum to maximum speed. Run several grinding cycles at maximum speed.
24. Then stop grind-in mode again.
25. Check all knives.
26. Remove the sealing sponge from the mouthpiece.

If any of the knives have not been ground, turn the freewheel *(Fig. 31-11)* clockwise by a quarter of a turn to advance all the knives. Then repeat the grind-in operation.

Information
One of the knives actuates the pin for monitoring the length of the knives. Whenever the knives are replaced, check to ensure that this pin moves easily.

Only install knives of equal length in the knife drum to prevent knife drum imbalance.

3.4.3.4 Lubricating the ball joint on the knife advance unit

WARNING

Danger of injury!
Be careful your fingers do not get crushed when you work on the knife advance mechanism.

Be particularly careful and wear protective gloves!

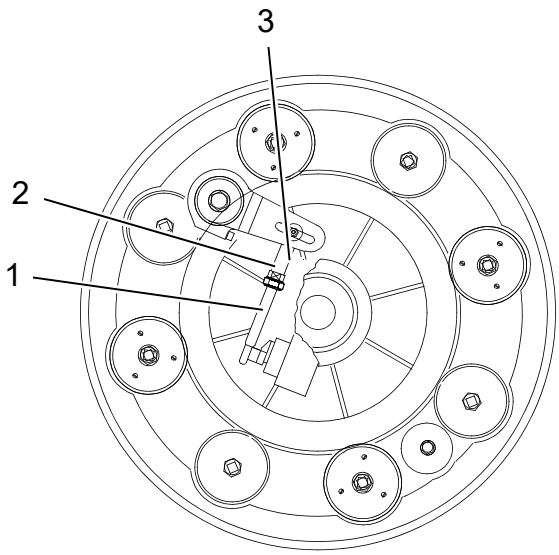

Fig. 32 Lubricating the ball joint (0590_trom_2014.z.00005.00.cgm)

Lubricate the ball joint *(Fig. 32-2)*, which drives the knife advance unit via the connecting rod *(Fig. 32-1)*, once a week (every 2 to 6 knife changes) through the grease nipple *(Fig. 32-3)*.

Use a grease gun (accessories kit) to fill in the grease through the grease nipple.

3.4.3.5 Cleaning the sliding plate at the tobacco discharge point

⚠ WARNING

Risk of injury due to extremely sharp knives.
The knives are extremely sharp and can cause extremely serious cutting injuries.

Always wear cut resistant gloves (cut resistance level 5) and protective footwear when working on the knives of the knife drum.

Fig. 33 Cleaning the sliding plate (0590_trom_2014.s.00006.00.cgm)

⇨ Remove the sliding plate *(Fig. 33-1)* below the knife drum after every shift, or at least once a day, and clean it.

3.4.3.6 Checking the knife drum holding brake

The function of the holding brake should be checked from time to time. Proceed as follows to make this check:

1. Set the knife drum speed to 100%.
2. Stop the tobacco cutter by switching the main switch off. When the holding brake is applied, the knife drum should be brought to a standstill within 8 to 12 seconds.

Information
The tobacco cutter may only be switched off with the main switch in order to check the holding brake.

3.4.3.7 Knife advance gear unit maintenance

To perform maintenance work on the knife advance gear unit, the gear unit must be removed. Carry out the same steps as described

in the section headed **“Changing the knife advance gear unit”** (↑ 3-33).

3.4.3.8 Cleaning the gaps between the knife drum and the cutter head frame

⚠ WARNING

Risk of injury presented by sharp knives
You could cut yourself.

Always wear cut resistant gloves (cut resistance level 5) and protective footwear when working on the knives of the knife drum.

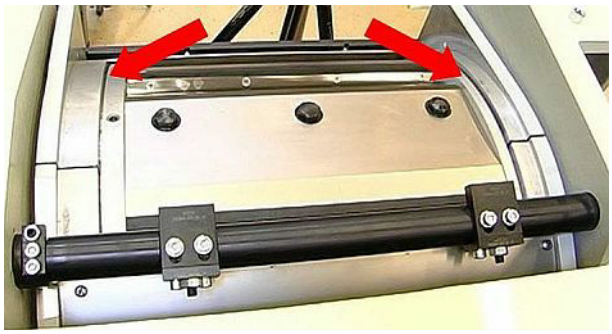

Fig. 34 Cleaning the gaps at the knife drum (0590_spalt2015.z.00000.00.jpg)

Cleaning the gaps

1. Switch off the main switch (-Q01) and padlock it to prevent it being switched on again.
2. Open the hood.
3. Remove the guard on the knife drum.
4. Press button (-SH1 / SF1) on the cutter head control panel to activate the knife drum brake; the pilot lamp (-SH1 / SF1) lights up.
5. Scrape out/clean the gaps *(Fig. 34)* using a scraper or spatula (preferably a brass spatula).
6. Press button (-SH1 / SF1) on the cutter head control panel to release the knife drum brake; the pilot lamp (-SH1 / SF1) goes out. Hand-turn the knife drum.

   Repeat steps 5 - 7 until both gaps have been cleaned along the entire circumference.
7. Refit the guard on the knife drum.
8. Close the hood.

3.5 Grinder unit

⚠ DANGER

Dangers that are not known or that can result from another person's actions
Death or serious physical injury will occur.

- Make sure the main switches for the power and compressed air supply have been switched off and secured in the off position before carrying out any maintenance work. However, you can leave the second main switch for the power supply to the EMERGENCY STOP loop, the visualization and the lighting system switched on.
- Once the maintenance work has been completed, make sure that all parts in direct contact with the materials composing the final product are absolutely clean.

⚠ WARNING

Risk of injury
Falling objects can cause severe injuries.

Wear protective footwear when working on the grinder unit!

Information
The grinding wheel is sometimes referred to as cup wheel.

⚠ WARNING

Danger of injury!
The follow-through time of the grinding wheel can be up to 3 minutes when the tobacco cutter is switched off.

3.5.1 Setting

3.5.1.1 Checking and setting grinding wheel advance

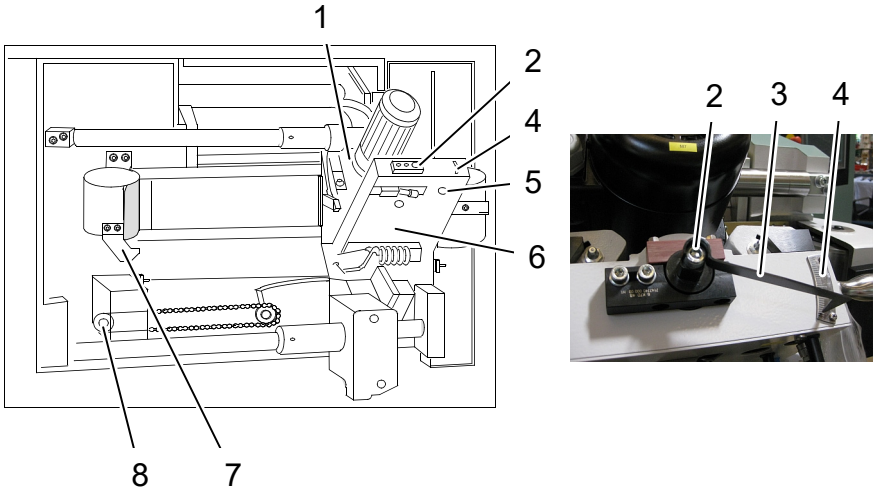

Fig. 35 Grinding wheel (0590_topf_2014.z.00004.00.cgm)

Checking grinding wheel advance

1. Stop the machine and open the hood *(Fig. 35-6)* on the cutter head.
2. Place a pointer *(Fig. 35-3)* on the spindle screw *(Fig. 35-2)* and turn it to the zero position of the scale *(Fig. 35-4)*.
3. Close the hood *(Fig. 35-6)* and start grinding-in in manual mode.
4. Stop the machine after one traversing cycle and open the hood. The position of the pointer *(Fig. 35-3)* on the scale *(Fig. 35-4)* indicates the grinding wheel advance in ° per traversing cycle.
5. Remove the pointer *(Fig. 35-3)* from the screw *(Fig. 35-2)* again after the check.

Information
Alternatively, a traversing cycle can also be executed manually - without starting grinding-in mode. To do so, place a hex. key on the shaft of the grinding carriage *(Fig. 35-2)* and turn it counter-clockwise. This allows the grinding carriage to be moved from the initial position to the limit position by turning the chain wheel *(Fig. 35-8)*. When the grinding carriage has reached and activated the cam *(Fig. 35-7)* which triggers grinding wheel advance, a traversing cycle has been performed.

Information
Simulating a traversing cycle by activating the cam *(Fig. 35-7)* manually - without moving the grinding carriage - is not accurate enough and therefore not suitable for checking grinding wheel advance.

Increasing read-off accuracy

The scale *(Fig. 35-4)* has an indicating range of 30°.

To increase the accuracy of the test results, several traversing cycles can be carried out in succession. The value indicated should then be divided by the number of traversing cycles.

Example: scale reading after 10 traversing cycles = 27°. Corresponds to an advance per traversing cycle of 2.7°.

Information
To increase reading accuracy, Körber Technologies recommends that 10 traversing cycles should be carried out to check the advance for grinding wheel advances ≤ 3°.

Setting grinding wheel advance

1. Stop the machine and open the hood *(Fig. 35-6)* on the cutter head.
2. Release the locknut for the screw *(Fig. 35-5)* using an a/f 16 spark plug wrench (accessories kit).

Information
The spark plug wrench is a pipe wrench with a hex key which is placed on the screw *(Fig. 35-5)* from above. When the locknut is held at the same time, the screw *(Fig. 35-5)* can be adjusted.

3. Turn screw *(Fig. 35-5)* in to reduce the grinding wheel advance rate *(Fig. 35-1)* (extends the service life) or turn screw *(Fig. 35-5)* out to increase the grinding wheel advance rate *(Fig. 35-1)* (reduces the service life).
4. Afterwards, check grinding wheel advance as described before using the pointer *(Fig. 35-3)* and the scale *(Fig. 35-4)*.
5. After completing the adjustment, use the spark plug wrench to retighten the locknut for the screw *(Fig. 35-5)*.

Basic setting

Normally, the advance is approx. 2-3° per traversing cycle / stroke.

Information
To reduce wear on the dressing diamond, 5° per traversing cycle / stroke must not be exceeded.

3.5.1.2 Setting the grinding profile

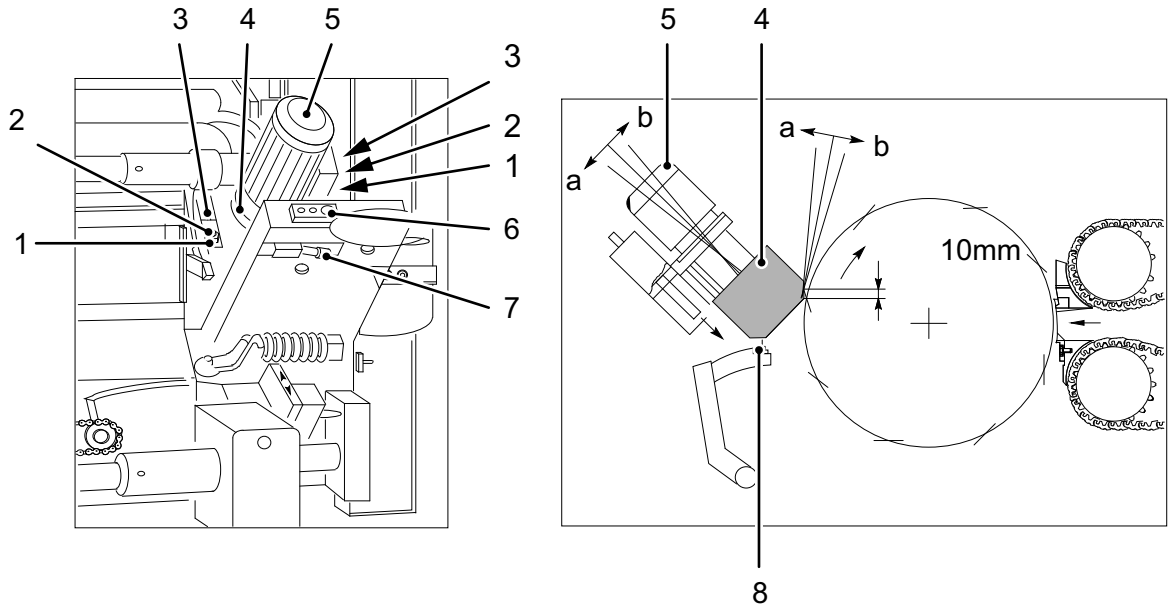

Fig. 36 Diamond grinding wheel (0592_K100HWR.z.00069.00.svg)

NOTICE

Damage to machinery possible
The knives make contact with the grinding wheel approx. 10 mm from the inside edge of the grinding wheel. If the diameters involved are smaller, the inside edge can be damaged and the knife can become blunt. Collision between the knives and the bottom knife bar may occur.

Regularly check the gap!

Information
The grinding profile is preset and may only be corrected in exceptional cases.

The grinding profile is not altered when the diamond is adjusted.

By turning the adjuster screws *(Fig. 36-1)* the angle of the grinding wheel drive *(Fig. 36-5)* and therefore the grinding profile on the grinding wheel *(Fig. 36-4)* can be altered slightly (direction a - b).

Prerequisites

✓ The knives must be ground and clean.

✓ The grinding wheel must be dressed beforehand, see the section headed **"Replacing the grinding wheel"** (↑ 3-56).

Procedure

1. Open the hood.
2. Release the clamp screw *(Fig. 36-7)* on the carrier.

3. Use a socket wrench (a/f 19) to turn the advance shaft *(Fig. 36-6)* for the grinding wheel *(Fig. 36-4)* counter-clockwise by 2 turns and lift the grinding wheel off the cutting circle.
4. Release both hex socket-head screws *(Fig. 36-2)* and the set-screws *(Fig. 36-3)* on both sides.
5. Adjust the two adjuster screws *(Fig. 36-1)* on both sides by the same amount (max. 1 mm).
   – Turning the adjuster screws *(Fig. 36-1)* counter-clockwise shifts the grinding profile towards the outside edge of the grinding wheel.
   – Turning the adjuster screws *(Fig. 36-1)* clockwise shifts the grinding profile towards the inside edge of the grinding wheel.
6. Once the required grinding profile has been set, retighten the setscrews *(Fig. 36-3)* and hex socket-head screws *(Fig. 36-2)*.
7. Hand-turn the knife drum, carefully moving one knife up to the grinding wheel.
8. Dress the grinding wheel; see section **“Replacing the grinding wheel”** (↑ 3-56).
9. Use a socket wrench (a/f 19) to turn the advance shaft carefully clockwise, advancing the grinding wheel carefully until it makes contact with the knife.
10. Tighten the clamp screw *(Fig. 36-7)* on the carrier.
11. Close the guards.
12. Start grind-in mode on the operator unit. See manual **HBD.0590.xxx.xx**, chapter "Starting grind-in mode".
13. Touch the "+" function key to set the knife drum to maximum speed. Run several grinding cycles at maximum speed.
14. Check the grinding profile.
15. Then stop grind-in mode again.

Information
If the required grinding profile is not achieved, repeat steps 1. – 15.

Information
Setting the grinding profile changes the cutting circle. It is therefore necessary to check and adjust the position of the dressing diamond, see the section headed **“Adjusting the dressing diamond”** (↑ 3-60).

3.5.1.3 Adjusting the carriage guide

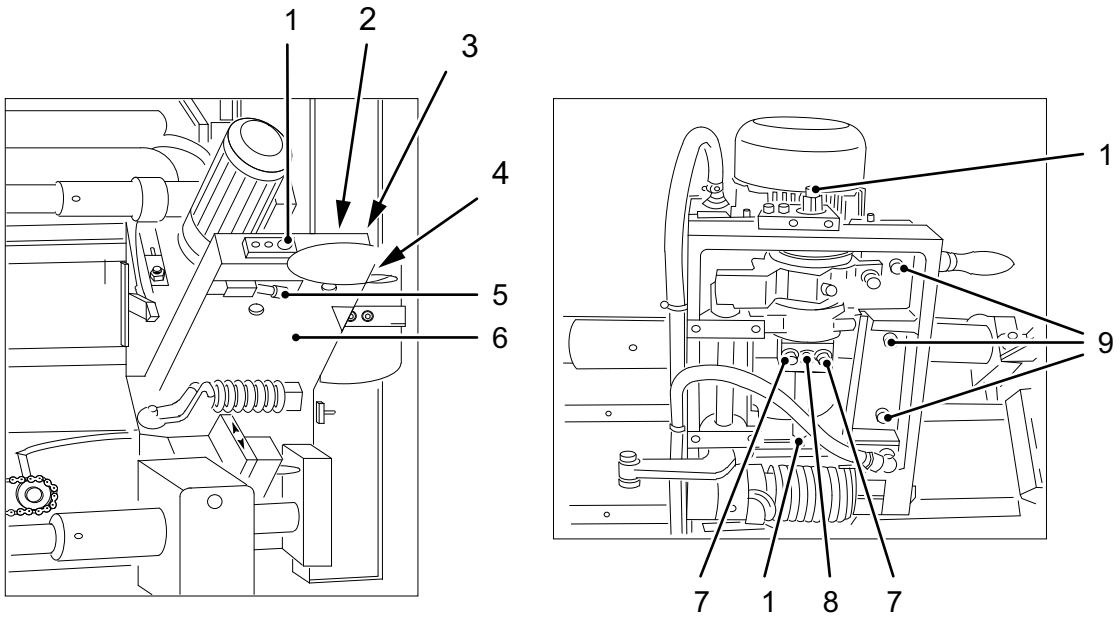

Fig. 37 *(0592_K100HWR.z.00070.00.svg)*

Procedure

1. Unscrew the cover plate *(Fig. 37-6)* and remove linear measuring sensor -B17 / BG17, which hides the hex socket-head screws.
2. Release the three hex socket-head screws *(Fig. 37-9)* on the wedge rail *(Fig. 37-2)* and the clamp screw *(Fig. 37-5)*.
3. Remove the grinding wheel.
4. Release the two fixing screws *(Fig. 37-7)* for the spindle nut *(Fig. 37-8)* and turn the advance shaft *(Fig. 37-1)* counter-clockwise to move the spindle nut to the top end of the spindle.
5. Degrease the guiding surfaces of the wedge rail *(Fig. 37-2)*. The guiding surfaces must be completely free from grease to ensure that the wedge rails can be adjusted with sufficient accuracy.
6. Push the wedge rail *(Fig. 37-2)* against the carriage *(Fig. 37-3)* and push the adjuster screws *(Fig. 37-4)* by hand up to the wedge rail *(Fig. 37-2)*.
7. Tighten the three hex socket-head screws *(Fig. 37-9)* on the wedge rail *(Fig. 37-2)* and the locknut for the adjuster screw *(Fig. 37-4)*.
8. Tighten the fixing screws *(Fig. 37-7)* on the spindle nut *(Fig. 37-8)* located in the top position.
9. Use a socket wrench (a/f 19) or a cordless screwdriver to move the carriage to its bottom position. Check the play to ensure that it moves freely.
10. Regrease the guiding surfaces of the wedge rail *(Fig. 37-2)* via the grease nipples.

11. Refit and set linear measuring sensor -B17 / BG17, see the section headed **“Setting sensor -B17 / BG17”** (↑ 1-9).
12. Tighten the clamp screw *(Fig. 37-5)* and screw the cover plate *(Fig. 37-6)* back on.

Information
Check the grinding profile after completing the work.

If the required result is not achieved, repeat steps 1. – 12.

3.5.1.4 Setting the advance shaft brake

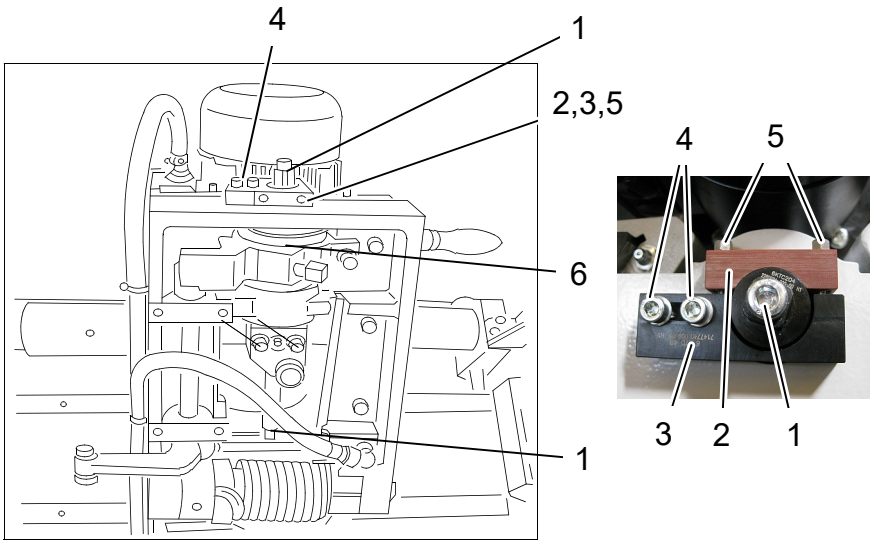

Fig. 38 1: Freewheel (0590_brems.z.00002.00.cgm)

The brake blocks *(Fig. 38-2)*, *(Fig. 38-3)* hold the advance shaft *(Fig. 38-1)* while the freewheel *(Fig. 38-6)* moves backwards.

Procedure

Proceed as follows to set the brake:

1. Release the screws *(Fig. 38-4)* for aligning the brake blocks.
2. Set the brake blocks *(Fig. 38-2)*, *(Fig. 38-3)* so that they are parallel to the grinder securing bracket, retighten the screws *(Fig. 38-4)*.
3. To tighten the brake, tighten the screws *(Fig. 38-5)*.

   Cup springs are fitted below the heads of the screws *(Fig. 38-5)*. The pre-tension on the cup springs is sufficient to hold the advance shaft *(Fig. 38-1)* during the return movement of the freewheel.

Information
The brake blocks *(Fig. 38-2)*, *(Fig. 38-3)* must be centred on the advance shaft. Do not overtighten the screws *(Fig. 38-4)* to prevent damage to the fabric-base laminate part *(Fig. 38-3)* (lower brake block).

3.5.2 Maintenance

3.5.2.1 Replacing the grinding wheel

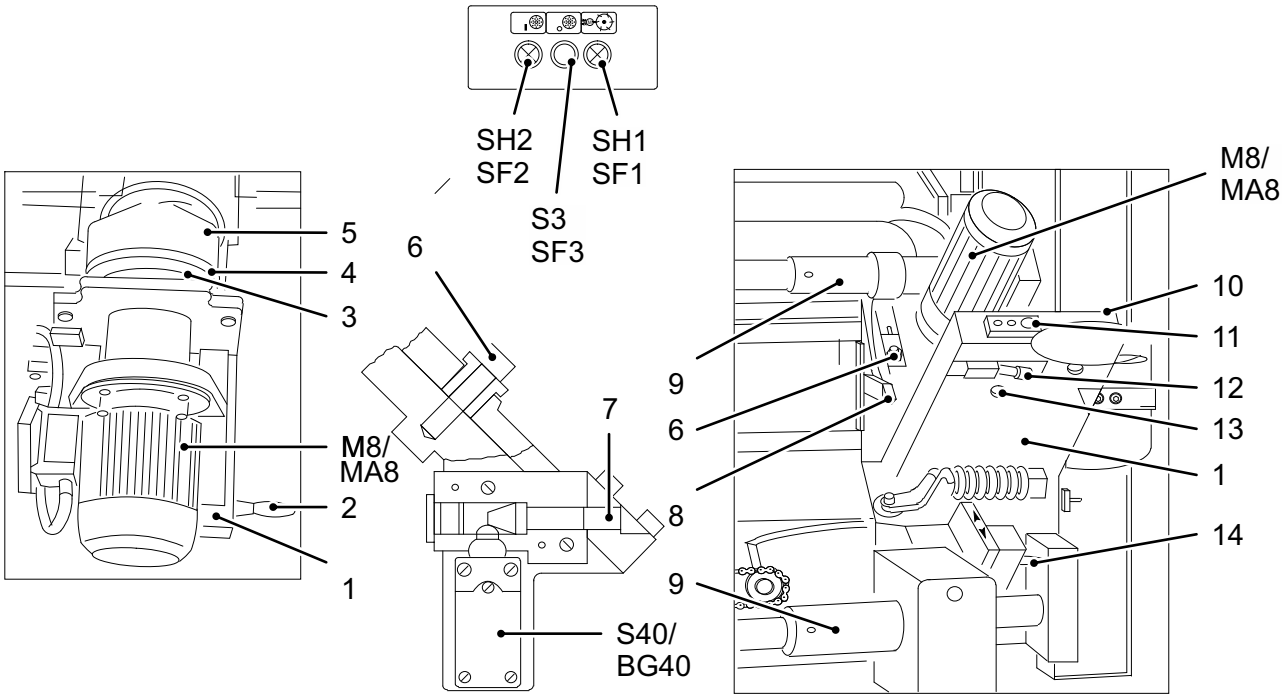

Fig. 39 *(0592_K100HWR.z.00071.00.svg)*

To gain access to the grinding wheel *(Fig. 39-5)*, swing down the spindle block *(Fig. 39-1)* with motor *(Fig. 39-M7)*.

Procedure

Proceed as follows to replace the grinding wheel:

1. Secure the new grinding wheel to mounting disk TA0590-00061087 (included in the accessories kit) using 4 hex socket-head screws and keep it ready. When securing the grinding wheel *(Fig. 39-5)*, make sure it is centrally aligned with the mounting disk TA0590-00061087 to avoid imbalance when the grinding wheel is rotating.
2. Open the hood.
3. Release the clamp screw *(Fig. 39-12)* on the carrier.
4. Insert the safety pin *(Fig. 39-7)*. Limit switch (-S40 / BG40) is actuated and prevents switch-on of motor (-M7).
5. Use a socket wrench (a/f 19) or cordless screwdriver to turn the advance shaft *(Fig. 39-11)* for the grinding wheel *(Fig. 39-5)* counter-clockwise (to the left) as far as it will go.
6. After removing the two hexagon socket-head screws *(Fig. 39-6)*, grip the handle *(Fig. 39-2)* and cautiously lower the spindle block *(Fig. 39-1)*.
7. Use the supplied tool TA0590-00061087 to secure the grinding wheel *(Fig. 39-5)* on the mounting flange *(Fig. 39-4)* to prevent

it turning. Extract the three hex. screws on the mounting flange *(Fig. 39-4)*.

8. Remove the mounting flange *(Fig. 39-4)* with the (old) grinding wheel *(Fig. 39-5)*. Clean the dust from in front of the grinding wheel mounting and the tapped holes.
9. Fit the new grinding wheel *(Fig. 39-5)*, which was earlier secured to the flange, to the shaft *(Fig. 39-3)* using the three hex screws.

Information
Tighten the screws to a torque of 16 Nm.

As soon as the mounting seat of the mounting disk is worn, it must be replaced to ensure the unit can be aligned centrally and is free of unbalance.

10. Pivot the grinding head carriage *(Fig. 39-1)* up and secure it with the two hex socket-head screws *(Fig. 39-6)*.
11. Unscrew the safety pin *(Fig. 39-7)*, closing the contact on limit switch *(Fig. 39-S40)*.
12. Press the button (-SH2 / SF2) to start grinding wheel motor (-M8 / MA8); the pilot lamp (-SH2 / SF2) lights up.
13. Use a socket wrench (a/f 19) to carefully turn the advance shaft *(Fig. 39-11)* clockwise. At the same time, pull the diamond holder *(Fig. 39-14)*, together with the dressing diamond mounted on it, back and forth until the inside edge of the grinding wheel makes contact with the diamond.
14. Dress the grinding wheel manually until all of its face has been trimmed.

Information
Only whet the grinding wheel with the diamond when the grinding wheel motor (-M8 / MA8) is running. The dressing depth must not exceed 0.1 mm.

15. Tighten the clamp screw *(Fig. 39-12)* on the carrier.
16. Pull the diamond holder *(Fig. 39-14)* to allow for subsequent grinding wheel advance; pull the lever several times.
17. Press button (-S3 / SF3) to stop the grinding wheel motor.
18. Close the hood.

Information
After changing the grinding wheels grease the following parts:

- The advance shaft for the grinding wheel via the grease nipple.
- The guides for the grinding head carriage and the grinding head.

3.5.2.2 Replacing the dressing diamond

⚠ WARNING

Risk of injury from the diamond.
The dressing diamond may be sharp. You could cut yourself.

Wear cut resistant gloves (cut resistance level 5).

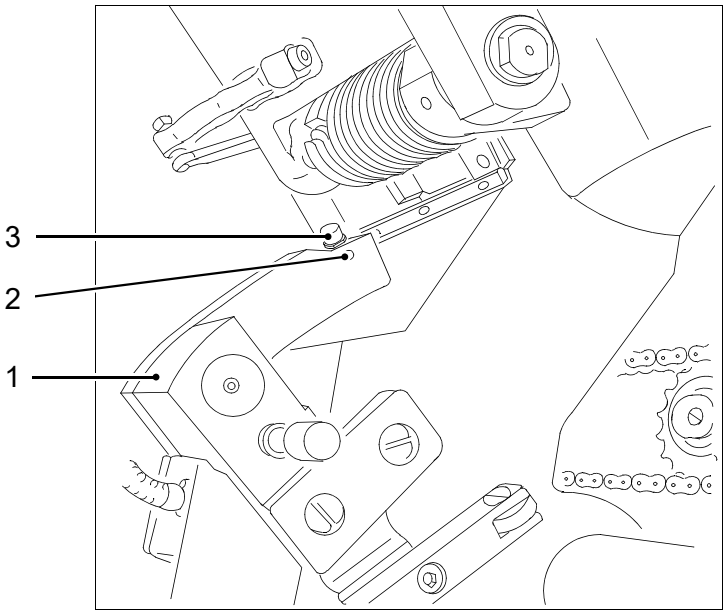

Fig. 40 *(0590_abri_2014.z.00001.00.cgm)*

1. Pivot the diamond holder *(Fig. 40-1)* with the dressing diamond *(Fig. 40-3)* away.
2. Release the clamp screw *(Fig. 40-2)* and remove the dressing diamond.
3. An aluminium securing piece is located in the hole for the clamp screw. Take care not to lose it.
4. Screw a new dressing diamond *(Fig. 40-3)* into the hole.
5. Swivel the diamond holder *(Fig. 40-1)* until the dressing diamond *(Fig. 40-3)* screwed in place is located close to the grinding wheel.
6. Turn out the dressing diamond *(Fig. 40-3)* until the tip of the dressing diamond is in light contact with the grinding wheel.
7. Tighten the clamp screw *(Fig. 40-2)*.

3.5.2.3 Adjusting the dressing diamond (when the bottom knife bar is worn)

⚠ WARNING

Risk of injury from the knives
You could cut yourself.

Always wear cut resistant gloves (cut resistance level 5) and protective footwear when working on the knife drum.

⚠ WARNING

Eye injuries caused by flying sparks.
Flying sparks are produced during the grinding operation, which can cause serious injury to your eyes.

Wear safety goggles.

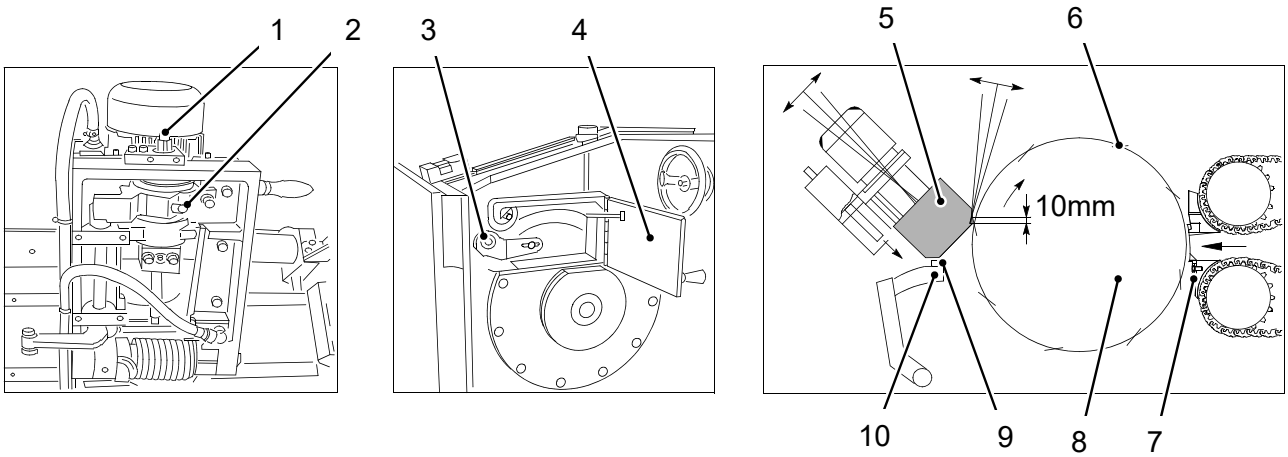

Fig. 41 *(0590_just_2014.z.00001.00.cgm)*

Prerequisites

✓ Make sure the knives are properly ground before you start adjustment work (cutter head closed).

Procedure

1. Open the hood.
2. Release the clamp screw *(Fig. 41-2)* on the freewheel and use a socket wrench (a/f 19) or cordless screwdriver to turn back the advance shaft *(Fig. 41-1)* on the grinding wheel *(Fig. 41-5)* counter-clockwise as far as it will go.
3. Open the guard on the knife drum.
4. Open the door *(Fig. 41-4)* for knife advance adjustment. Locate the freewheel by turning the knife drum *(Fig. 41-8)*.
5. Fit the socket wrench from the accessories kit on the freewheel *(Fig. 41-3)* and advance all the knives *(Fig. 41-6)* simultaneously and in parallel (not more than half a turn).
6. Hand-turn the knife drum *(Fig. 41-8)*, thus running the knives *(Fig. 41-6)* past the bottom knife bar *(Fig. 41-7)*.

7. Repeat steps 4. and 5. until the knives make light contact with the bottom knife bar.
8. Use a socket wrench (a/f 19) to turn the advance shaft *(Fig. 41-1)* carefully clockwise, advancing the grinding wheel *(Fig. 41-5)* carefully until it makes contact with the knife *(Fig. 41-6)*.
9. Hand-turn the knife drum *(Fig. 41-8)*, thus running the knives *(Fig. 41-6)* past the grinding wheel *(Fig. 41-5)*.
10. Release the clamp screw *(Fig. 41-10)* and turn the dressing diamond *(Fig. 41-9)* out slowly to move it up to the grinding wheel *(Fig. 41-5)*. Tighten the clamp screw *(Fig. 41-10)*.

Information
When adjusting the dressing diamond never turn it out by more than 1/10 of a revolution. (This corresponds to an adjustment of the dressing diamond of 0.1 mm.)

Always dress the cup wheel at least once before undertaking any further adjustments.

Adjustment must be performed at the latest when burr begins to form on the bottom knife bar.

11. Tighten the clamp screw *(Fig. 41-2)* on the freewheel.
12. Close all doors and guards.
13. Start and execute grind-in mode on the operator unit. See manual **HBD.0590.xxx.xx**, chapter "Starting grind-in mode".
14. Then stop grind-in mode again.

3.5.2.4 Adjusting the dressing diamond (when the bottom knife bar is replaced)

⚠ WARNING

Risk of injury from the knives
You could cut yourself.

Always wear cut resistant gloves (cut resistance level 5) and protective footwear when working on the knife drum.

⚠ WARNING

Eye injuries caused by flying sparks.
Flying sparks are produced during the grinding operation, which can cause serious injury to your eyes.

Wear safety goggles.

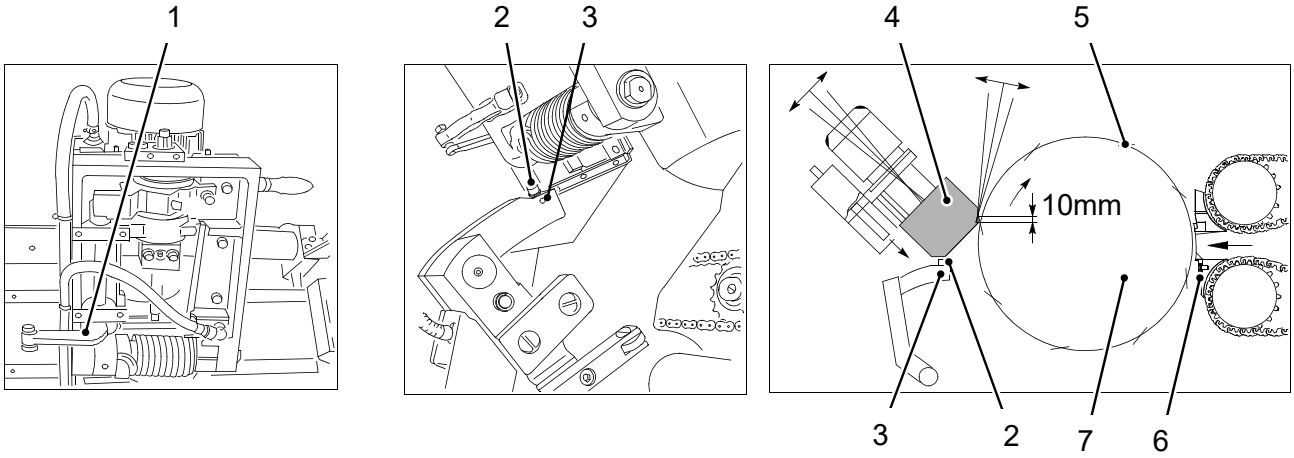

Fig. 42 *(0590_just_2014.z.00002.00.cgm)*

Prerequisites

✓ Make sure the knives are properly ground before you start adjustment work (cutter head closed).

Procedure

1. Open the hood.
2. Before removing the old bottom knife bar release the clamp screw *(Fig. 42-3)* and turn the dressing diamond *(Fig. 42-2)* back clockwise by the amount of the difference between the old and the new bottom knife bar *(Fig. 42-6)*. Then retighten the clamp screw *(Fig. 42-3)*.
3. Pull the lever *(Fig. 42-1)* 4 times by hand to advance the grinding wheel.
4. Close the hood.
5. Start grind-in mode on the operator unit and run two knife grinding cycles. See manual **HBD.0590.xxx.xx**, chapter "Starting grind-in mode".
6. Then stop grind-in mode again.
7. Repeat steps 3. to 5. until the dressing diamond *(Fig. 42-2)* is in contact with the grinding wheel *(Fig. 42-4)*.
8. Then grind the knives *(Fig. 42-5)* until the dressing diamond *(Fig. 42-2)* once again perfectly dresses the grinding wheel *(Fig. 42-4)*.
9. After stopping grind-in mode, fit a new bottom knife bar *(Fig. 42-6)*.
10. Close the cutter head, hand-turn the knife drum *(Fig. 42-7)* and check that the knives *(Fig. 42-5)* lightly touch the bottom knife bar *(Fig. 42-6)*.

Gap between knife and bottom knife bar is too small

NOTICE

Damage to the bottom knife bar is possible.
The bottom knife bar can be knocked off by the knives if the gap is too small.

If the gap is too small (contact between the knives and the bottom knife bar is audible), release the clamp screw *(Fig. 42-3)*, turn in the dressing diamond *(Fig. 42-2)* and then retighten the clamp screw *(Fig. 42-3)*.

1. Close all doors and guards.
2. Start grind-in mode on the operator unit. See manual **HBD.0590.xxx.xx**, chapter "Starting grind-in mode".
3. Run a grinding cycle and check to ensure that the grinding wheel is being correctly dressed.
4. Then stop grind-in mode again.

3.5.2.5 Retensioning the tension spring on the lever of the diamond holder

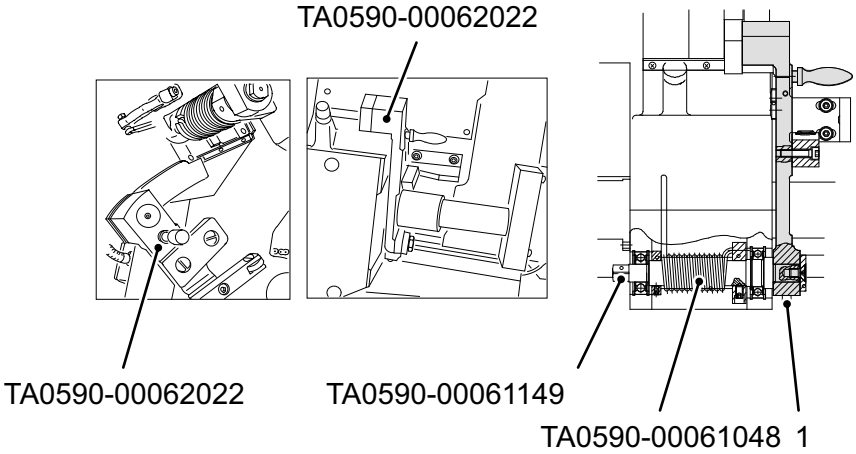

Fig. 43 *(0592_K100HWR.z.00077.00.svg)*

Tension spring TA0590-00061048

If the lever TA0590-00062022 is in contact with the stop screw, the tension spring TA0590-00061048 with the shaft TA0590-00061149 may not be pre-tensioned to more than 110°.

⇨ After tensioning, secure the lever with the clamp screw *(Fig. 43-1)*.
The stroke angle must not exceed 45°.

3.5.2.6 Retensioning the tension spring on the steel belt

⚠ CAUTION

Danger of injury!
When the tension on the steel belts is released, the belts can suddenly retract and cause injuries.

Only trained staff are allowed to perform the following work:

- To remove steel belt TA0590-00061134, clamp ring 6 KTD 54 – and with it spindle TA0590-00061135 – must be released.
- Always tension the tension springs TA0590-00061133 after fitting the steel belt TA0590-00061134.
- Tension the tension springs TA0590-00061133 with max. two turns of the spindle TA0590-00061135.

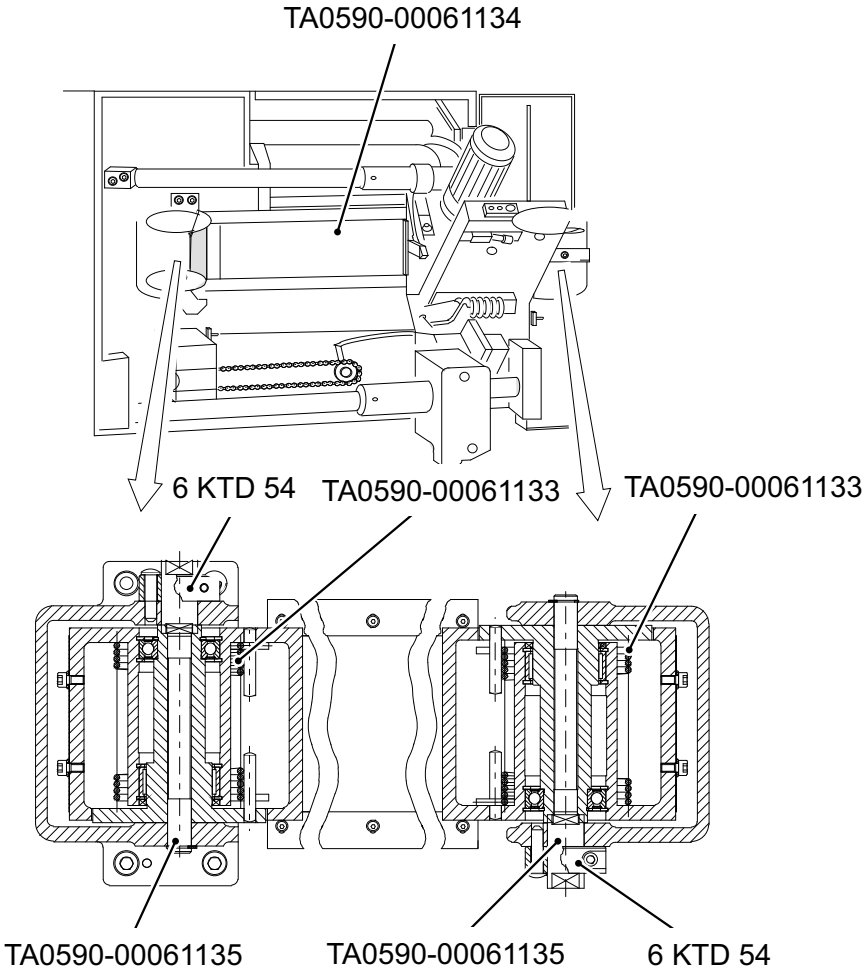

Fig. 44 *(0592_K100HWR.z.00074.00.svg)*

Tension spring TA0590-00061133

1. Slacken clamp ring 6 KTD 54 to release the spindle TA0590-00061135.

2. Move the grinding carriage to the right-hand position, then tension the tension spring TA0590-00061133 in the left-hand winding unit.
3. Move the grinding carriage to the left-hand position, then tension the tension spring TA0590-00061133 in the right-hand winding unit.
4. Finally secure the spindle with clamp ring 6 KTD 54.

3.5.2.7 Fitting the angular-contact ball bearings on the grinding wheel drive

Installation position

Angular-contact ball bearings can be fitted in an O arrangement (<>) or in an X arrangement (><). The outer rings on the bearings are marked with an arrow (<) to identify the installation position.

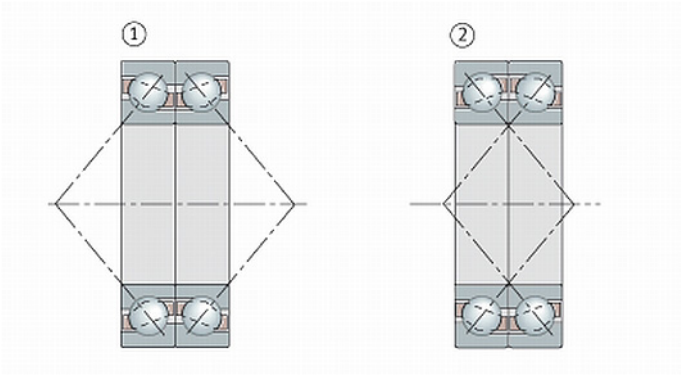

Fig. 45 *(0590_Lager.z.00000.00.jpg)*

1. *(Fig. 45-1)* = O arrangement (<>)
2. *(Fig. 45-2)* = X arrangement (><)

Information
The angular-contact ball bearings on the grinding wheel drive must always be fitted in the O arrangement (<>).

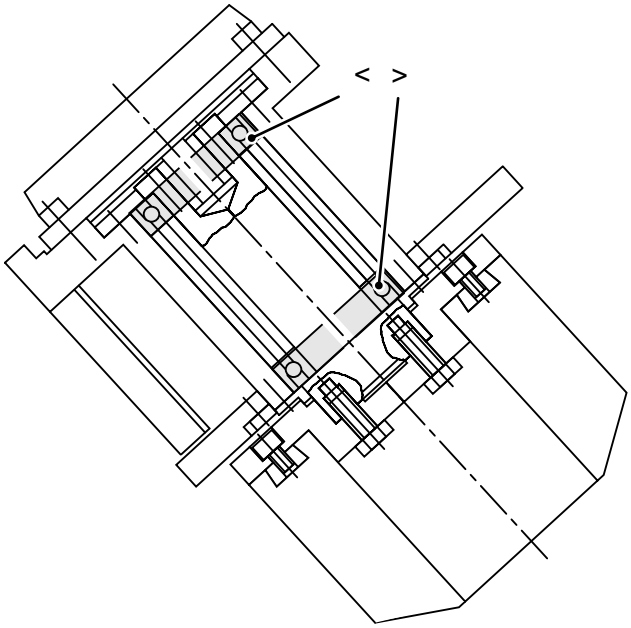

Fig. 46 *(0592_K100HWR.z.00072.00.svg)*

Lubrication

When fitting the bearings make sure they are adequately lubricated. Only lubricants recommended by Körber Technologies may be used.

Information
The procedure for fitting and removing the angular-contact ball bearings is described in the separate catalog sheet for the grinding wheel drive.

3.5.2.8 Regreasing the grinding carriage bushes

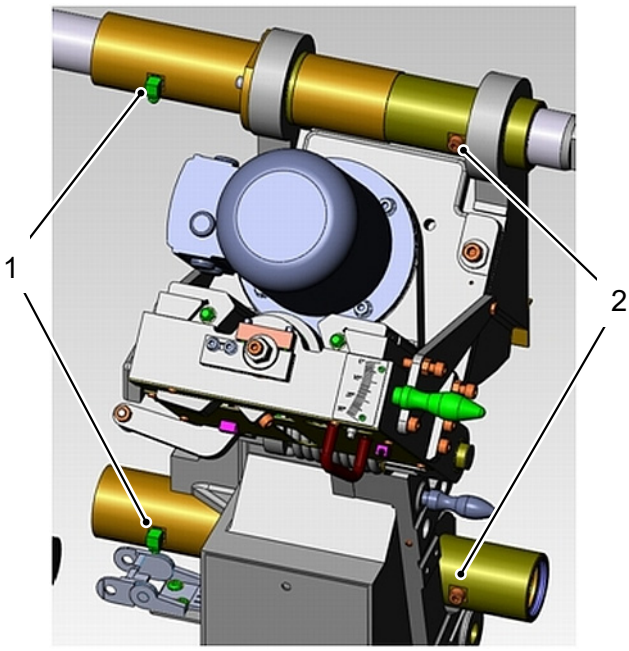

Fig. 47 Regreasing the bushes (0590_Buchsen.z.00000.00.cgm)

Double wipers are fitted in the brass sliding bushes on the grinder unit, which seal off the bushes to the inside.

Regreasing the bushes

The bushes must be regreased once a week. The following procedure is recommended:

1. Open the grease drain plug *(Fig. 47-2)*.
2. Use a grease gun (accessories kit) to fill in grease through the grease nipple *(Fig. 47-1)* until excessive grease emerges from the drain plug.

NOTICE

Damage to machinery possible!
If too much grease is filled in, this can cause the grinding carriage to perform heavy, jerky movements. This can result in damage to the machine.

Move the grinding carriage manually, completing two full cycles. Catch any emerging grease.

3. Close the grease drain plug again.

Information
If all of the grease is to be replaced, grease must be filled in through the grease nipple until clean grease emerges from the drain plug.

Replace the grease when it is still warm, i.e. immediately after production.

3.5.2.9 Retensioning the grinder unit chain drive

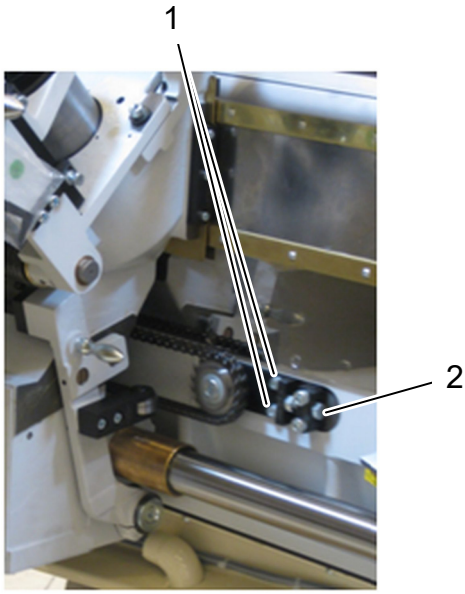

Fig. 48 Retensioning the chain drive (0590_schl_2014.s.00001.00.cgm)

Check the chain drive of the grinder unit once a month and retension it if required.

Retensioning

1. Release the set screws *(Fig. 48-1)*.
2. Use the screw *(Fig. 48-2)* to adjust the chain tension.
   - Turn clockwise to increase the chain tension.
   - Turn counter-clockwise to reduce the chain tension.
3. Once the correct tension has been set, retighten the set screws *(Fig. 48-1)*.

3.5.2.10 Readjusting the grinder unit limiting points

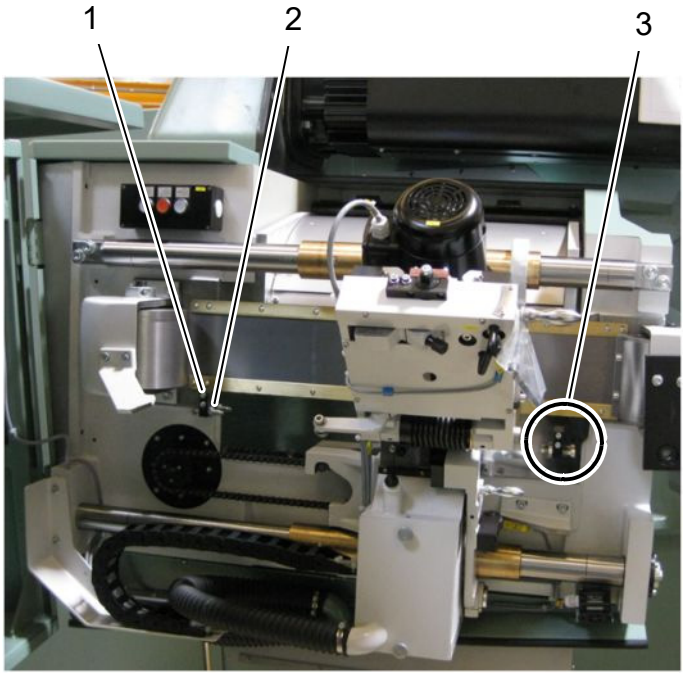

Fig. 49 Readjusting the limiting points (0590_schl_2014.s.00002.00.cgm)

The distance of the limiting points of the grinder unit must be regularly checked and readjusted if required. The distance between the grinder unit direction reversal points and limiting points should be 0.5 – 1.0 mm.

NOTICE

Damage to machinery possible!
If the grinder unit is reversed only when the stop is reached, this can cause damage to machinery.

Regularly check the distance of the limiting points readjust if required.

Readjustment

1. Release the locknut *(Fig. 49-2)*.
2. Move the grinder unit manually into the direction reversal point.
3. Adjust the limiting screw *(Fig. 49-1)* to set the required distance (0.5 - 1.0 mm in front of the limiting point).
4. Once the correct distance has been set, retighten the locknut *(Fig. 49-2)*.
5. Use the same method to set the second direction reversal point *(Fig. 49-3)*.

3.5.2.11 Cleaning the brass cover on the grinder unit

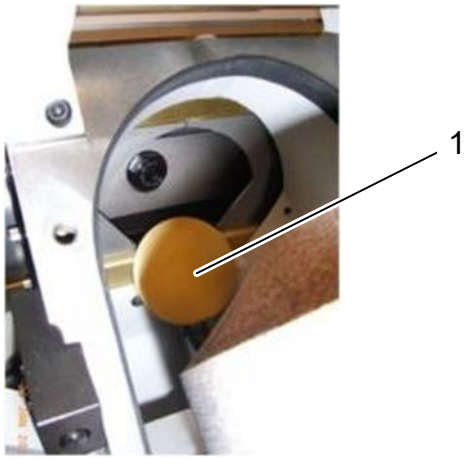

Fig. 50 Cleaning the brass cover (0590_schl_2014.s.00003.00.cgm)

The brass cover of the grinder unit must be cleaned daily.

Cleaning

1. Open the grinder unit.
2. Clean the brass cover *(Fig. 50-1)* and vacuum-clean the area.

3.5.2.12 Daily cleaning of the steel belts

Clean the steel belts on the grinding carriage guide once a day.

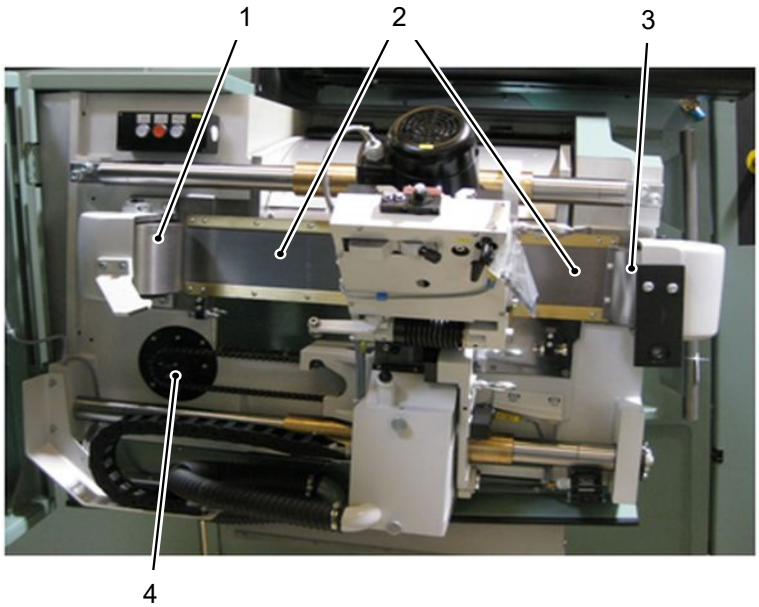

Fig. 51 Grinding carriage (0590_Stahlband.s.00000.00.cgm)

- Right-hand side *(Fig. 51-1)*
- Steel belt *(Fig. 51-2)*
- Left-hand side *(Fig. 51-3)*

- Chain wheel *(Fig. 51-4)*

Information
Clean the steel belts *(Fig. 51-2)* on both sides. The sides right *(Fig. 51-1)* and left *(Fig. 51-3)* are indicated as seen from the tobacco massflow!

Information
To clean the steel belts, the grinding carriage must be moved manually.

The grinding carriage is moved manually by turning the chain wheel *(Fig. 51-4)*. To do so, place the square socket wrench supplied in the accessories kit on the shaft of the chain wheel and turn it counter-clockwise.

Cleaning the left-hand steel belt

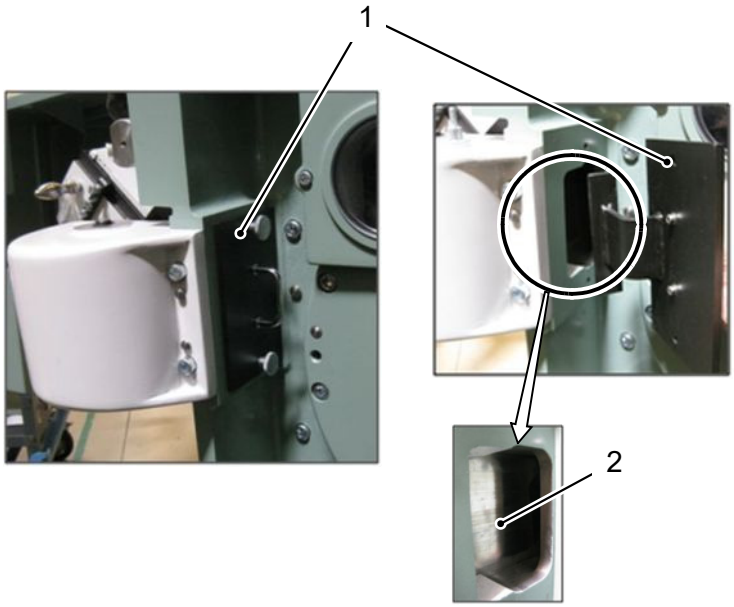

Fig. 52 Left-hand steel belt (0590_Stahlband.s.00001.00.cgm)

Daily cleaning of the left-hand steel belt:

1. Remove the tobacco deflector *(Fig. 52-1)*.
2. Clean the tobacco deflector.
3. Clean/vacuum clean the area behind the tobacco deflector.
4. Clean the steel belt *(Fig. 52-2)* through the cleaning opening for the tobacco deflector. To gain access, manually move the grinding carriage step by step into both limit positions.

Cleaning the right-hand steel belt

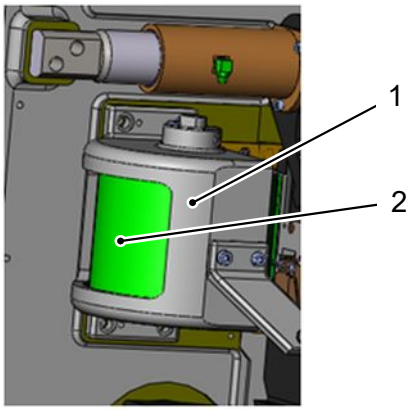

Fig. 53 Right-hand steel belt (0590_Stahlband.s.00002.00.cgm)

For the daily cleaning of the right-hand steel belt move the grinding carriage manually step by step into both limit positions. Access for cleaning the steel belt *(Fig. 53-2)* is gained through the cleaning opening on the cast housing *(Fig. 53-1)*.

Make sure to remove loose dirt by vacuum cleaning to prevent it from penetrating between the steel belt and the cast housing.

Information
The steel belt on the right-hand side cannot be cleaned completely. The first section of approximately 180 mm on the side on which the steel belt is fixed to the grinding carriage cannot be reached through the cleaning opening.

Positioning the grinding carriage after cleaning

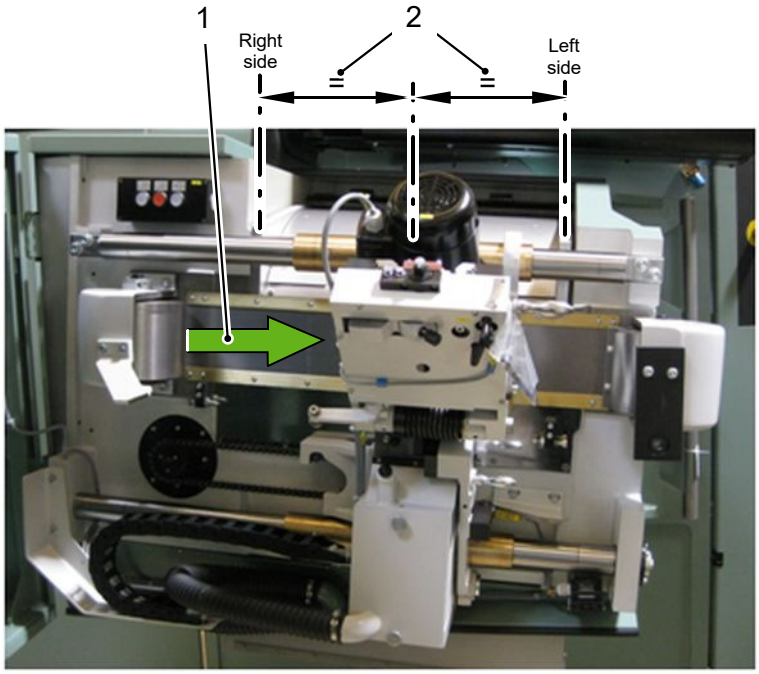

Fig. 54 Position after cleaning (0590_Stahlband.s.00003.00.cgm)

After the cleaning process, align the grinding carriage with the centre *(Fig. 54-2)* of the knife drum (approx. 210 mm away from the right-hand limit position).

To prevent any damage to the machine when restarting, the grinding carriage must be moved to this position from the right-hand limit position *(Fig. 54-1)* (moving from right to left as seen in the direction of tobacco flow)!

3.5.2.13 Monthly cleaning of the steel belts

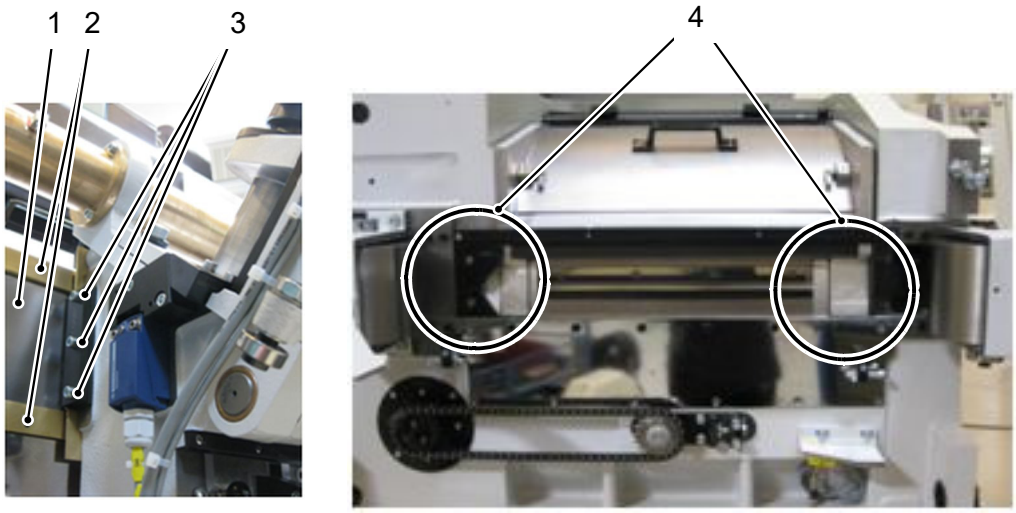

Fig. 55 Removing the steel belts (0590_Stahlband.s.00004.00.cgm)

The steel belts *(Fig. 55-1)* must be removed from the grinding carriage once a month for cleaning. This allows the areas on the steel belts to be cleaned which can otherwise not be accessed.

⚠ WARNING

Risk of injury when removing the steel belts
The steel belts are pre-tensioned via a spring and can suddenly spring out of position when they are released. This can cause serious or even fatal injuries.

Work very carefully when de-tensioning the steel belts.

Monthly cleaning of the steel belts:

1. Carefully release the fixing screws *(Fig. 55-3)* on the steel belts (equivalent procedure on the other side).
2. The steel belts roll up by themselves due to their spring pretension. If necessary, they can be easily pushed out of the guide rails *(Fig. 55-2)*. The steel belts can be removed from the guide rails in the limit position.
3. Clean the areas behind the steel belts, particularly the areas indicated in the picture *(Fig. 55-4)*.

4. Clean the rear of the steel belts.
5. After cleaning, carefully push the steel belts *(Fig. 55-1)* back into the guide rails *(Fig. 55-2)*, position them correctly and retighten the fixing screws *(Fig. 55-3)* (equivalent procedure on the other side).

3.5.2.14 Cleaning the dustbin for the grinder unit

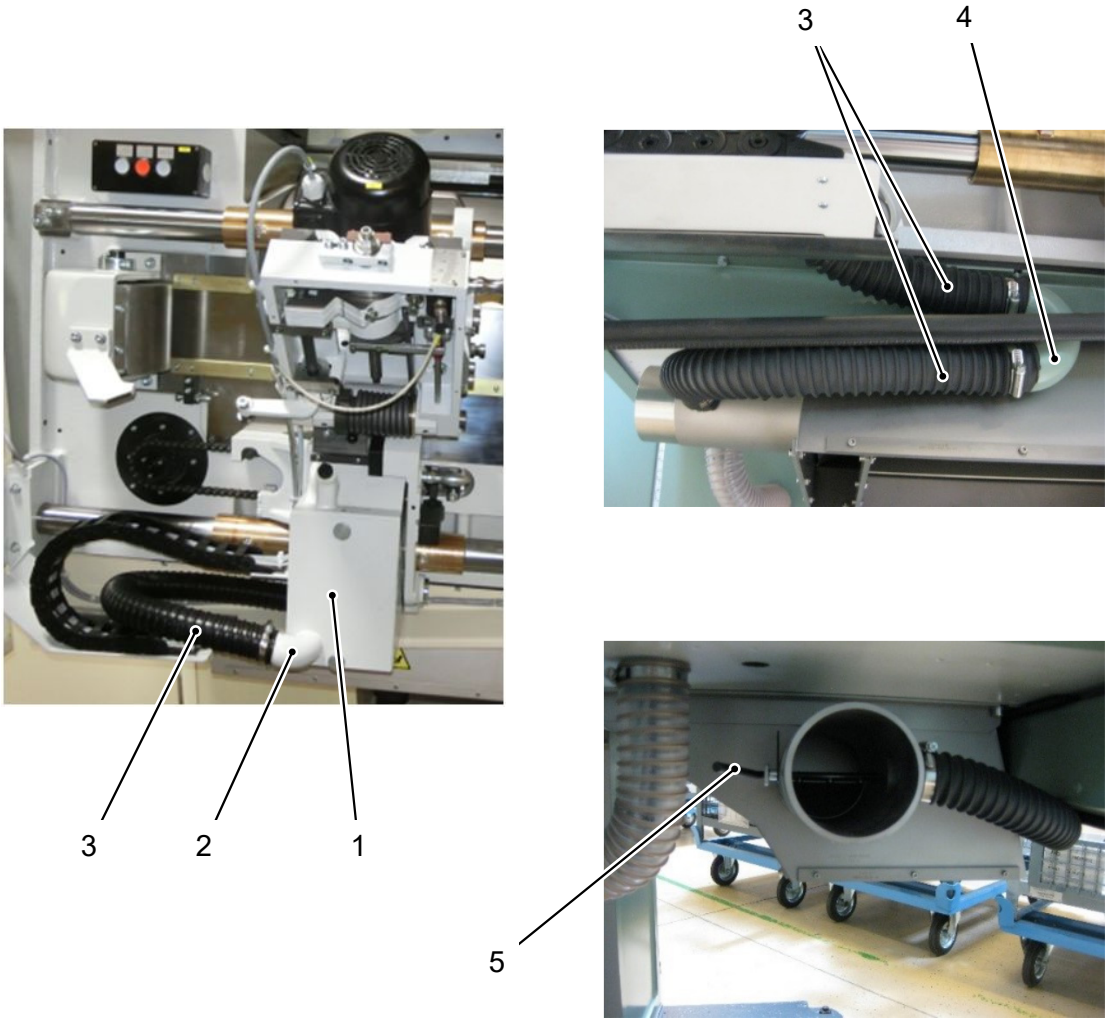

Fig. 56 Cleaning the dustbin *(0590_schl_2014.s.00005.00.cgm)*

The dustbin for the grinder unit *(Fig. 56-1)* must be emptied and cleaned daily.

⚠ WARNING

Fire hazard in the extraction system area!
If the extraction path is damaged or clogged up, pockets of heat can be created. Sparks extracted from the grinding unit can cause deposits to smoulder. These smoulder spots can ignite during extraction and cause a fire.

- Empty and clean the dustbin once a day.
- Clean the angled tubes *(Fig. 56-2)*, *(Fig. 56-4)* once a day.
- Clean the hoses *(Fig. 56-3)*. Replace them immediately if you detect any damage.
- Adjust the air flap *(Fig. 56-5)*.
- Provide an appropriate number of adequately dimensioned fire extinguishers.
- Ensure that the fire extinguishers are always easy to access and ready for use.

3.6 Mouthpiece

⚠ WARNING

Risk of extremities being trapped or crushed when the mouthpiece is lowered or raised manually!
Serious injuries may occur.

Never reach into the path of movement of the mouthpiece during manual operation.

⚠ WARNING

Risk of injury presented by extremely sharp knives!
The knives to be covered are razor sharp and can cause serious cutting injuries.

Whenever work is carried out with the cutter head open, the knife drum must be covered with the red safety cover plate (included in the delivery).

3.6.1 Mouthpiece: set-up tasks

3.6.1.1 Setting the mouthpiece

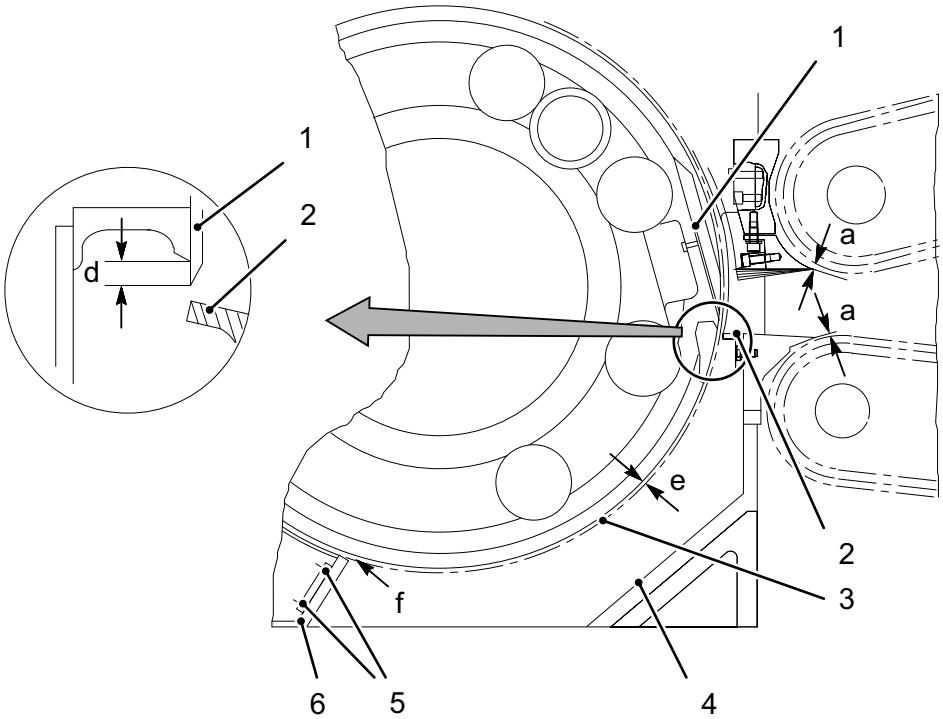

Fig. 57 (0592_K100HWR.z.00066.00.svg)

Good cut quality can only be obtained if the mouthpiece components are correctly adjusted in relation to the cutting circle of the knife drum.

Dimensions

When assembling, the following dimensions are obtained at the bottom mouthpiece or must be observed:

Dimensions	Distance between
a = 0.5-0.7 mm	Mouthpiece <-> conveyor chains
d = 4.0-4.5 mm	Knife protrusion <-> concave rail Wear limit d = 6.5 mm
e = 0 mm	Knife *(Fig. 57-1)* <-> bottom knife bar *(Fig. 57-2)* Adjustment limit e = 0.2 mm
f = 1.0 mm	Cutting circle *(Fig. 57-3)* <-> tobacco deflector

Setting the dimensions

Dimension "a" = 0.5-0.7 mm

- Does not require adjustment. Position secured by pins.

Dimension "d"= 4.0-4.5 mm

- Reference dimension for knife protrusion.

  When the cutting circle *(Fig. 57-3)* is increased, knife protrusion *(Fig. 57-d)* also increases. The bottom knife bar *(Fig. 57-2)* must be replaced when knife protrusion has reached d = 6.5 mm. This corresponds to wear of approx. 1.0 mm on the bottom knife bar. For replacing the bottom knife bar refer to the chapter **"Replacing the bottom knife bar"** (↑ 3-79).

Dimension "e" = 0 mm

- Gap between knife and bottom knife bar.

  Dimension "e" will increase over time as a result of bottom knife bar wear.

  The diameter of the cutting circle must be increased at the latest when e = 0.2 mm to set gap "e" = 0 mm again. This is done by adjusting the dressing diamond.

Dimension "f" = 1.0 mm

Dimension "f"= distance between cutting circle and tobacco deflector is set as follows:

1. Remove the sliding plate *(Fig. 57-4)*.
2. Remove the ejection bin.
3. Release the screws *(Fig. 57-5)*.
4. Turn the knife drum and set the tobacco deflector against the knife *(Fig. 57-6)*.
5. Shift the tobacco deflector *(Fig. 57-6)* to obtain dimension "f".
6. Tighten the screws *(Fig. 57-5)*.
7. Fit the ejection bin.
8. Insert the sliding plate *(Fig. 57-4)*.

The sliding plate should be cleaned and the dimensions checked every two days.

3.6.2 Mouthpiece: maintenance work

3.6.2.1 Removing and fitting the mouthpiece

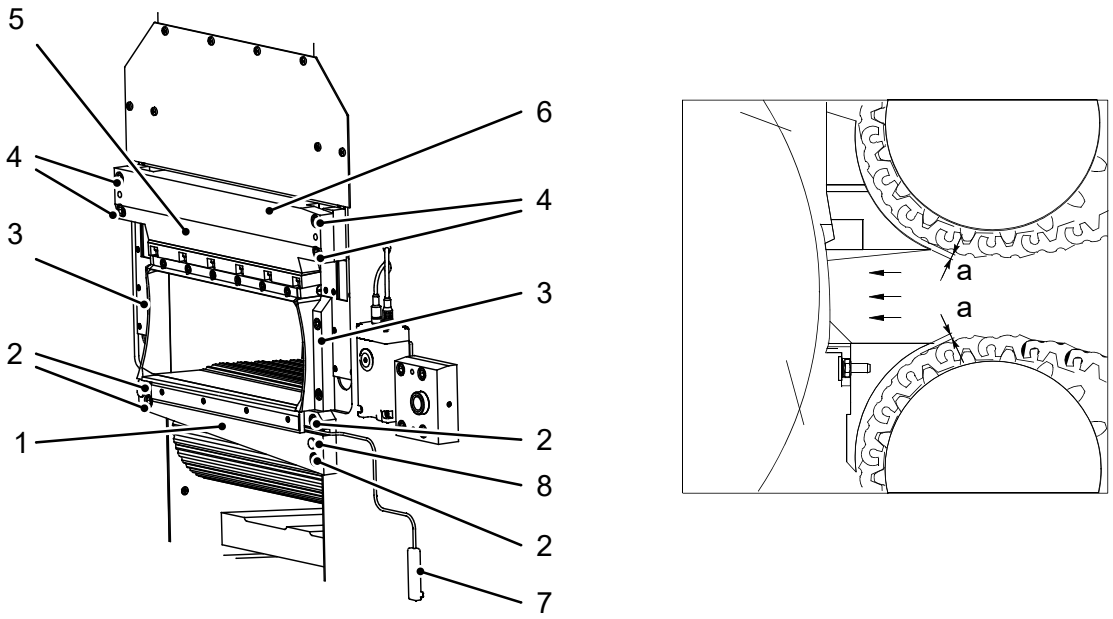

Fig. 58 *(0592_K100HWR.z.00030.00.cgm)*

If the conveyor chains need to be cleaned or replaced, the mouthpiece bottom and top sections must be removed.

Removing the mouthpiece top section

1. Extract the four screws *(Fig. 58-4)*.
2. Remove the mouthpiece top section *(Fig. 58-5)*.
   (Note: Remember/note down the positions and orientations of the blocks.)
3. Remove the plate *(Fig. 58-6)*.
4. Remove both mouthpiece side sections *(Fig. 58-3)*.

Fitting the mouthpiece top section

⇨ Reassemble in reverse order.

Removing the mouthpiece bottom section

1. Unplug the connector *(Fig. 58-7)* (for the safety contact).
2. Pull out the two oval head pins *(Fig. 58-8)*.
3. Extract the four screws *(Fig. 58-2)*.
4. Remove the mouthpiece bottom section *(Fig. 58-1)*.

Fitting the mouthpiece bottom section

⇨ Reassemble in reverse order. As both of the mouthpiece sections are pinned, gap "a" to the conveyor chains will be correctly set.

3.6.2.2 Replacing the wedge rail on the mouthpiece top section

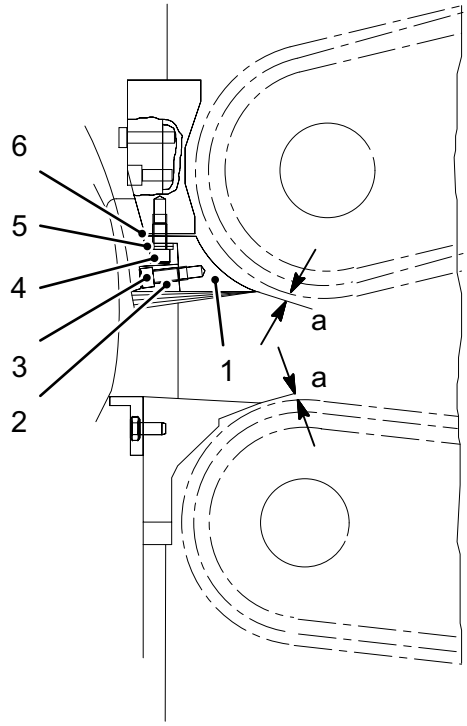

Fig. 59 *(0592_K100HWR.z.00067.00.svg)*

The top section of the mouthpiece is fitted with a wedge rail *(Fig. 59-6)*. The wedge rail influences the tobacco cut quality and can be replaced to suit special types of tobacco/stems.

After fitting a different wedge rail, set the mouthpiece top section at a distance of a = 0.5-0.7 mm to the conveyor chain.

Information
When fitting the wedge rail *(Fig. 59-6)*, the special washers *(Fig. 59-5)* must not be replaced by normal washers. Damaged special washers *(Fig. 59-5)* must be replaced.

Tightening torque for the studs *(Fig. 59-4)* = 20 Nm.

Procedure

1. Clean the mouthpiece.
2. Remove six screws *(Fig. 59-3)*, detach the angle bracket *(Fig. 59-2)* and remove the studs *(Fig. 59-4)*.
3. Remove the mouthpiece rail *(Fig. 59-1)*.
4. Remove the wedge rail *(Fig. 59-6)* and select a new wedge rail.
5. Place the special washers *(Fig. 59-5)* on all studs *(Fig. 59-4)*.
6. Loosely fit the mouthpiece rail *(Fig. 59-1)* with a new wedge rail *(Fig. 59-6)*, set gap "a" parallel with the conveyor chain and tighten.
7. Check gap "a" = 0.5-0.7 mm using a feeler gauge.
8. If necessary, release the screws *(Fig. 59-4)* and repeat steps 6 and 7 to correct the setting.

9. Fit the angle bracket *(Fig. 59-2)*, insert and tighten six screws *(Fig. 59-3)*.

3.6.2.3 Replacing the bottom knife bar

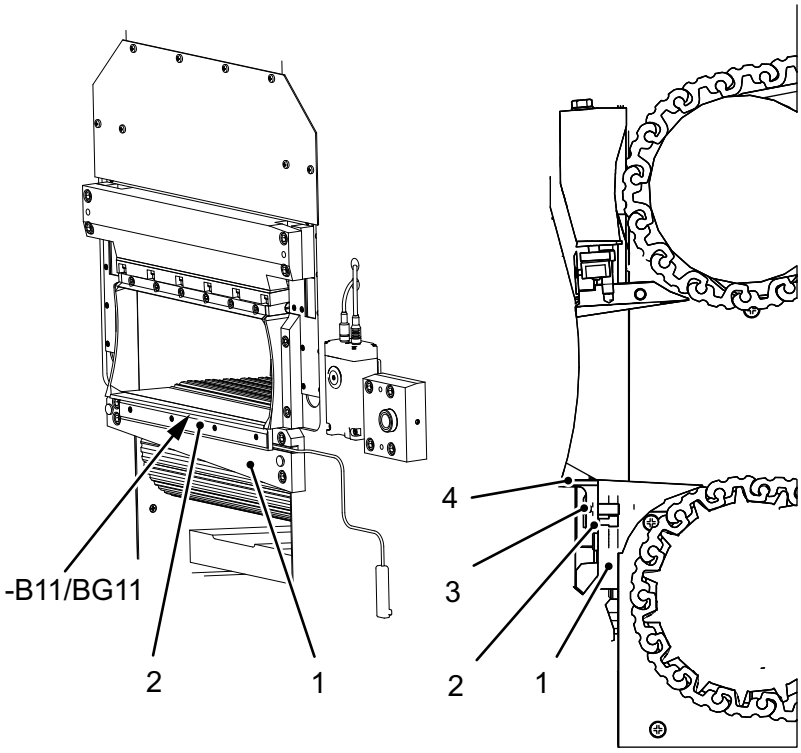

Fig. 60 *(0592_K100HWR.z.00075.00.svg)*

The bottom knife bar *(Fig. 60-4)* is secured on the mouthpiece bottom section *(Fig. 60-1)* with hollow screws *(Fig. 60-3)*, which are covered by the rail *(Fig. 60-2)*. Any hard NTRMs in the tobacco will cause the hollow screws to shear off and the bottom knife bar will be knocked off. This is registered by proximity switch -B11 / BG11 *(Fig. 60)*. A machine stop is initiated. The **Bottom knife bar not operational** message is displayed on the operator unit.

This message indicates that the bottom knife bar needs to be reinstalled or replaced if it is damaged.

Information
When the bottom knife bar is replaced, the knives must not be changed at the same time. This is a separate process.

The bottom knife bar must also be replaced when knife protrusion has reached d = 6.5 mm. This corresponds to wear of approx. 1.0 mm on the bottom knife bar. For permitted dimensions refer to the section headed **“Setting the mouthpiece”** (↑ 3-75).

Information
When fitting the bottom knife bar, the hollow screws must not be replaced with normal screws.

Tightening torque for the hollow screws = 20 Nm.

Required

◆ Only if the bottom knife bar was knocked off.

Procedure

1. Disconnect the plug for proximity switch BG11 *(Fig. 60)* and replace it with the plug supplied in the accessories kit.
2. On the operator unit, select manual mode for the conveyor chains and start the conveyor chains in the reverse direction. See manual **HBD.0590.xxx.xx**, chapter "Moving the conveyor chains forwards / backwards"
3. Then stop the conveyor chains again.

Information
Running the conveyor chains in reverse is only required when the bottom knife bar was knocked off.

4. Remove the cover rail *(Fig. 60-2)*.
5. Remove the old bottom knife bar. If the bottom knife bar was knocked off, use a pointed screwdriver to remove any remains of the hollow screws *(Fig. 60-3)*.
6. Fit a new bottom knife bar and align it. Use new hollow screws.
7. Refit the cover rail *(Fig. 60-2)*.
8. If a new bottom knife bar has been fitted, all knives need to be readjusted, see the section headed **“Adjusting the mouthpiece”** (↑ 3-75).

3.7 Movable discharging element (optional)

Should the movable discharging element be used on another machine during maintenance and cleaning work, a guard must be fitted in its place.

3.7.1 Removing the discharging element

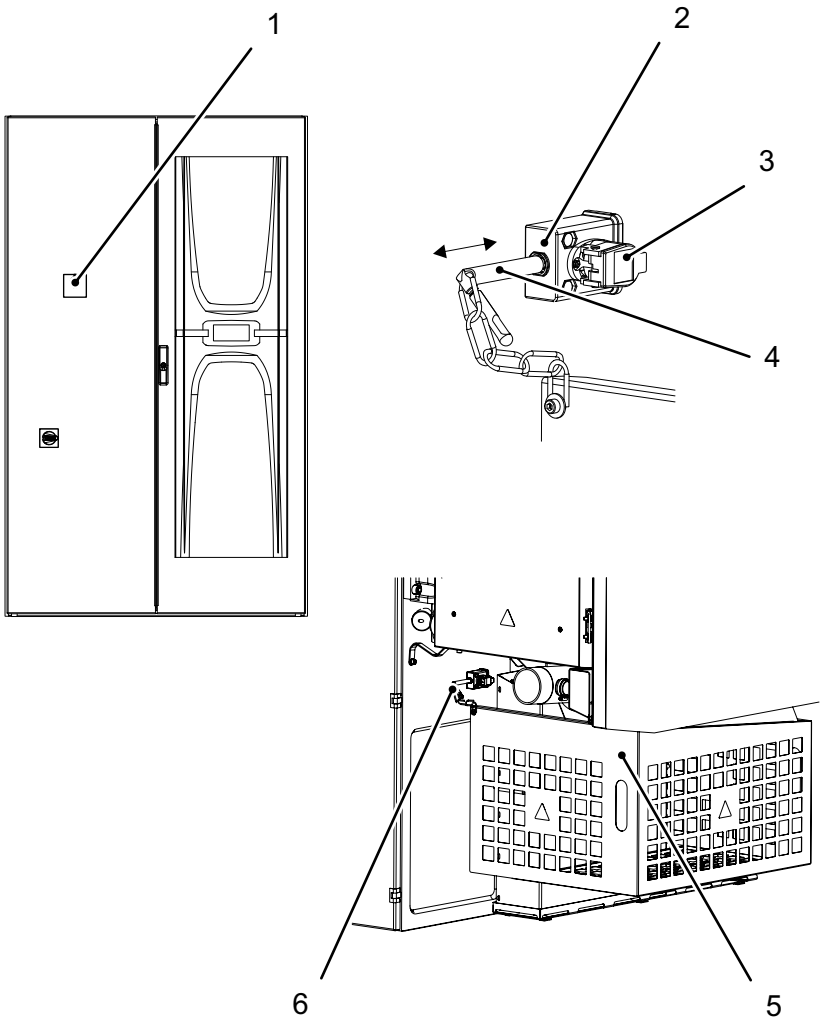

Fig. 61 *(0592_K100HWR.z.00056.00.svg)*

Required

◆ When using the discharging element on other machines

Procedure

1. Pull the coded key from the signal processing unit *(Fig. 61-1)* at the switch cabinet and insert it in the keyswitch in the area of the cutter head *(Fig. 61-2)*. This prevents starting of the cutter.
2. Pull the locking bolt with chain *(Fig. 61-4)* and the connected discharging element out of the keyswitch and remove the discharging element.
3. Slide the guard *(Fig. 61-5)* over the ejection chute and place its locking bolt with chain into the keyswitch *(Fig. 61-6)*.
4. Pull the coded key *(Fig. 61-3)* out of the keyswitch and place it back in the signal processing unit in the switch cabinet. The cutter can then be started for maintenance and clearing work.
5. Refit the discharging element by performing the above steps in reverse.

3.8 Compressed air system

⚠ WARNING

Danger of injury!
Work on pressurized components can result in injury.

- Only allow staff with sufficient technical qualification to work on the compressed air system.
- Prior to all work on the compressed air system, the compressed air supply must be switched off and the system must be vented.

⚠ WARNING

Risk of injury presented by pressure surges!
If the shut-off valves are opened or closed too quickly, this can result in pressure surges which can cause damage to the lines.

As a general rule, slowly open or close all shut-off valves in order to prevent pressure surges in the lines.

NOTICE

Malfunctions or damage to equipment!
The compressed air system can be impaired or damaged due to various influences.

- The maximum permitted air pressure of 8 bar must not be exceeded.
- The compressed air must be free of oil and water. Check the oil and water traps on a regular basis and drain them if necessary.

Information
Set the compressed air supply 300 mbar higher than the required mouthpiece pressure to reach the set mouthpiece pressure.

3.8.1 Settings

On delivery All necessary settings are made in the factory during assembly.

On spare part delivery All necessary settings are made in the factory.

3.8.2 Compressed air system: maintenance work

Checking the filter cartridge

The filter cartridge in the compressed air supply system should be checked once a month.

Procedure

1. Switch off the compressed air supply and release pressure.
2. Unscrew the filter cartridge.
3. Check the filter cartridge and replace it if required.
4. Check the sealing air setting (2 bar).

3.9 Compacting belt (KT 2 - L125 only)

3.9.1 Set-up task (compacting belt)

3.9.1.1 Setting the height of the compacting belt

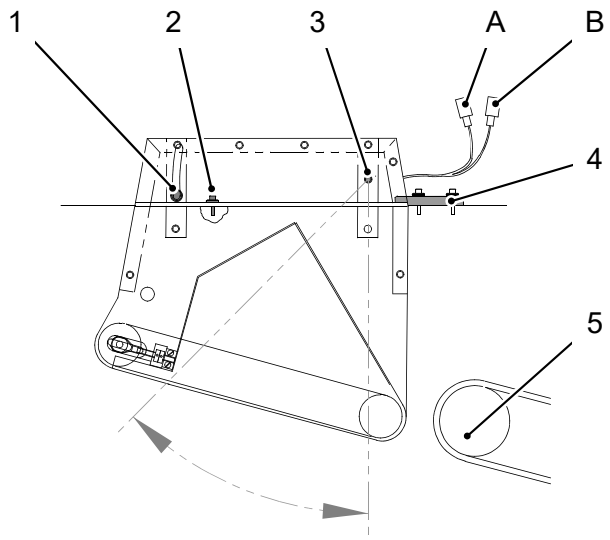

Fig. 62 Subassembly: compacting belt (0591_verdicht.z.00000.00.cgm)

The pre-compactor belt compacts the tobacco supplied to the machine to the level of the upper conveyor chain.

Procedure

1. Release the fixing screws *(Fig. 62-1)*.
2. Turn the belt mount about the pivot point *(Fig. 62-3)*.
3. Set the distance to the upper conveyor chain by moving the stop *(Fig. 62-4)*.

Information
The discharge height of the compacting belt must not be set above a maximum height of half of the height of the rear guide roller *(Fig. 62-5)* of the upper conveyor chain.

3.9.2 Maintenance work (compacting belt)

3.9.2.1 Removing and fitting the compacting belt (subassembly)

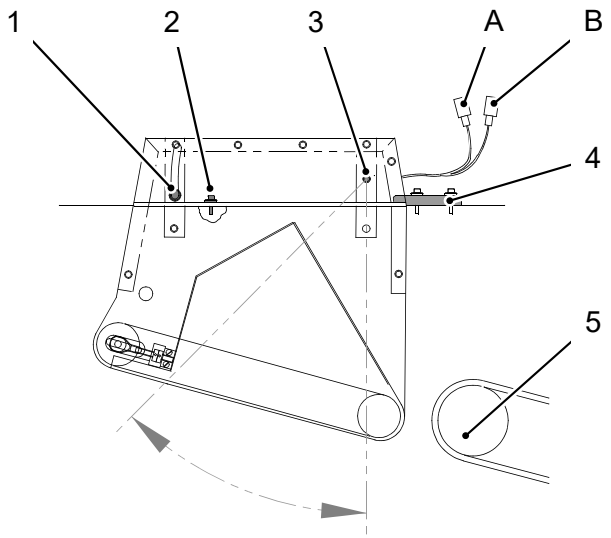

Fig. 63 Subassembly: compacting belt (0591_verdicht.z.00000.00.cgm)

Removing the compacting belt

1. Switch off the main switches (-Q01/-QA0) and padlock them to prevent them being switched on again.
2. Release plug connections *(Fig. 63-A)* and *(Fig. 63-B)*.
3. Release the hex socket-head screw *(Fig. 63-2)*.
4. Release the hex socket-head screws on the stop *(Fig. 63-4)*.
5. Pull the compacting belt forwards and lift it out.

Fitting the compacting belt

1. Switch off the main switches (-Q01/-QA0) and padlock them to prevent them being switched on again.
2. Insert the compacting belt and push it back.
3. Set the distance to upper conveyor chain (minimum distance 20 mm).
4. Tighten the hex socket-head screw *(Fig. 63-2)*.
5. Tighten the stop *(Fig. 63-4)*.
6. Re-establish plug connections *(Fig. 63-A)* and *(Fig. 63-B)*.
7. Turn on the main switch.

3.9.2.2 Tensioning the drive chain

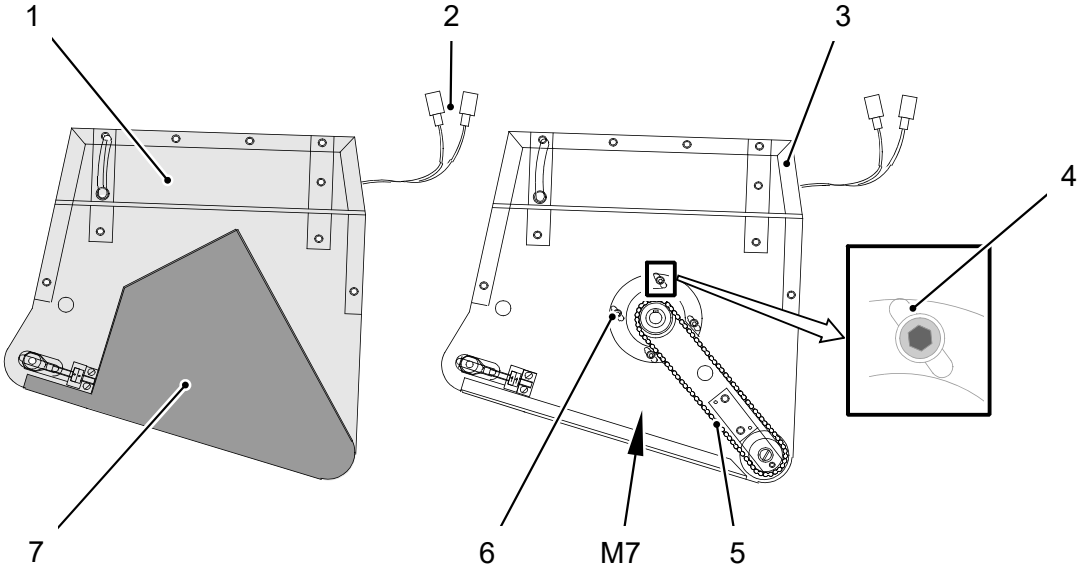

Fig. 64 Tensioning the pre-compactor-chain (0592_K100HWR.z.00033.00.cgm)

1. Remove the compacting belt (↑ 3-84).
2. Remove the support plate *(Fig. 64-1)*.
3. Remove the chain guard plate *(Fig. 64-7)*.
4. Remove the guard *(Fig. 64-3)*.
5. Release the screws *(Fig. 64-6 (4 x))*.
6. Pull motor *(Fig. 64-M3)* upwards in the slots *(Fig. 64-4)* to tension the drive chain *(Fig. 64-5)* of the compacting belt.
7. Tighten the screws *(Fig. 64-6)*.
8. Fit the guard *(Fig. 64-3)*.
9. Fit the chain guard plate *(Fig. 64-7)*.
10. Fit the support plate *(Fig. 64-1)*.
11. Fit the compacting belt (↑ 3-84).

3.9.2.3 Checking/correcting belt run and belt tension

⚠ WARNING

Maintenance work with machine switched on! Risk of crushing due to moving/rotating parts.
Parts of the body and/or clothing can get pulled in. Risk of severe or fatal injury or damage to machinery.

- Always take particular care when working on the machine when it is switched on.
- For all work on the plant or machine, maintenance staff must wear suitable safety equipment (tight-fitting clothing, protective footwear, hair net, cut resistant gloves if necessary (cut resistance level 5) etc.).
- Doors that require access authorization must only be opened by qualified technical staff.
- Never place your hands into rotating / revolving parts (rollers, belts, etc.).
- Note that all driven machine parts represent a potential risk, especially if the machine has been stopped but not switched off and in view of the fact that motors can be started at any time.

NOTICE

Risk of material damage due to incorrect and/or unstable support.

- Ensure the compacting belt is held securely.
- Never set down the compacting belt with the belt facing downwards, but make sure the belt faces upwards. When the compacting belt is placed on the belt it would move uncontrollably when started.

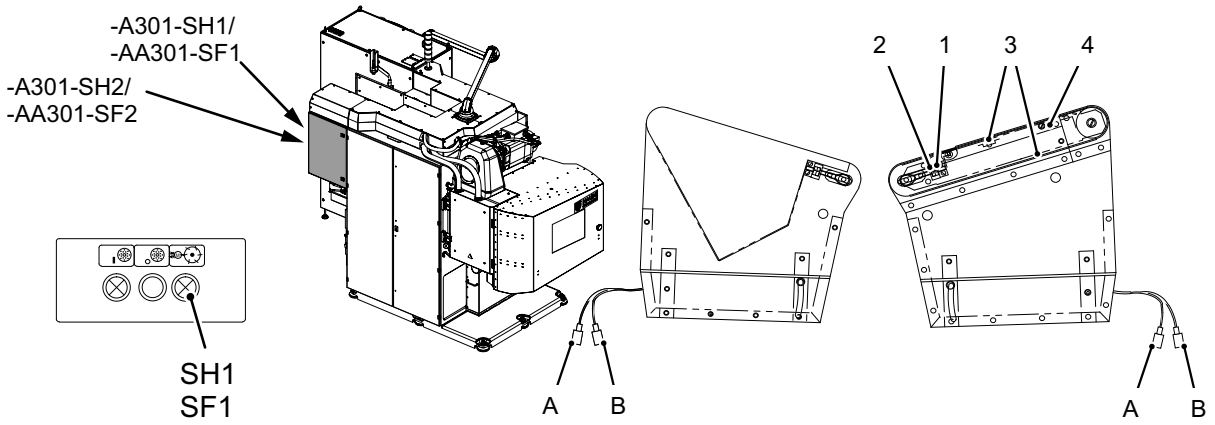

Fig. 65 Compacting belt (0592_K100HWR.z.00068.00.svg)

Checking belt run and belt tension

1. Remove the compacting belt (↑ 3-84), turn it round and set it down with the belt facing upwards. Do not detach plug connections *(Fig. 65-A)* and *(Fig. 65-B)* when doing this.
2. Turn on the main switch (-Q01/-QA0).
3. Turn selector switch *(Fig. 65-A301-SH1 / AA301-SF1)* to the right-hand position in order to switch to manual mode. LED lights up.
4. Press button *(Fig. 65-SH1 / SF1)* to start the compacting belt in reverse mode; pilot lamp lights up.
5. Check belt run and tension.

Correcting belt run and tension

1. Release the securing element *(Fig. 65-1)*.
2. Correct belt tension:
   – Tension the belt: turn the capstan nut *(Fig. 65-2)* counter-clockwise evenly on both sides.
   – De-tension the belt: turn the capstan nut clockwise evenly on both sides.
3. To correct belt run, turn one of the capstan nuts *(Fig. 65-2)* slightly counter-clockwise or clockwise on one side. Then check belt run. Repeat the procedure several times until the correct belt run is set.
4. Press button *(Fig. 65-A301-SH1 / AA301-SF1)* to stop the compacting belt.
5. Retighten the securing element *(Fig. 65-1)*.
6. Switch off main switch (-Q01/-QA0).
7. Refit the compacting belt (↑ 3-84).

3.9.2.4 Replacing the belt

⚠ WARNING

Maintenance work with machine switched on! Risk of crushing due to moving/rotating parts.
Parts of the body and/or clothing can get pulled in. Risk of severe or fatal injury or damage to machinery.

- Always take particular care when working on the machine when it is switched on.
- For all work on the plant or machine, maintenance staff must wear suitable safety equipment (tight-fitting clothing, protective footwear, hair net, cut resistant gloves if necessary (cut resistance level 5) etc.).
- Doors that require access authorization must only be opened by qualified technical staff.
- Never place your hands into rotating / revolving parts (rollers, belts, etc.).
- Note that all driven machine parts represent a potential risk, especially if the machine has been stopped but not switched off and in view of the fact that motors can be started at any time.

Replacing the belt

1. Switch off the main switch (-Q01/-QA0).
2. Detach plug connections *(Fig. 65-A)* and *(Fig. 65-B)*.
3. Remove the compacting belt (↑ 3-84), turn it round and set it down with the belt facing upwards.
4. Remove the guard *(Fig. 65-4)*.
5. Release the securing element *(Fig. 65-1)*.
6. Release the capstan nut *(Fig. 65-2)*.
7. Pull off the belt *(Fig. 65-3)*.
8. Fit a new belt.
9. Use the capstan nuts *(Fig. 65-2)* to lightly tension the belt.
10. Refit the guard *(Fig. 65-4)*.
11. Re-establish plug-in connections *(Fig. 65-A)* and *(Fig. 65-B)*.
12. Switch the main switch (-Q01/-QA0) back on.

Tensioning the belt

1. Turn selector switch *(Fig. 65-SH2 / SF2)* to the right-hand position in order to switch to manual mode. LED lights up.
2. Press button *(Fig. 65-SH1 / -SF1)* to start the compacting belt in reverse mode; pilot lamp lights up.
3. Check belt run and belt tension with the motor running and correct if necessary (see the section headed **"Correcting belt run and belt tension"** (↑ 3-87)).
4. Press button *(Fig. 65-S103)* to stop the compacting belt.
5. Tighten the securing element *(Fig. 65-1)*.
6. Switch the main switch (-Q01/-QA0) off again.

3.10 Pre-compactor unit (KT 2 - L160 only)

Information
For maintenance and cleaning work, the pre-compactor must be moved away. The pre-compactor has integrated stops which limit the movement.

Caution: The movement should be carried out correctly, the speed when hitting the limit stops should not exceed 0.3 m/s!

Otherwise, the limit stops may be damaged.

⚠ WARNING

Risk of body parts being trapped or crushed!
Risk of crushing when the pre-compactor is closed.

Be particularly careful.

⚠ WARNING

The pre-compactor can also be started when the tobacco waster bins have been removed!
Reaching into the area where the bins were removed can result in minor injury.

If the waste bins are removed, do not reach into the running machine.

3.10.1 Set-up tasks (pre-compactor)

3.10.1.1 Setting the height of the upper cassette

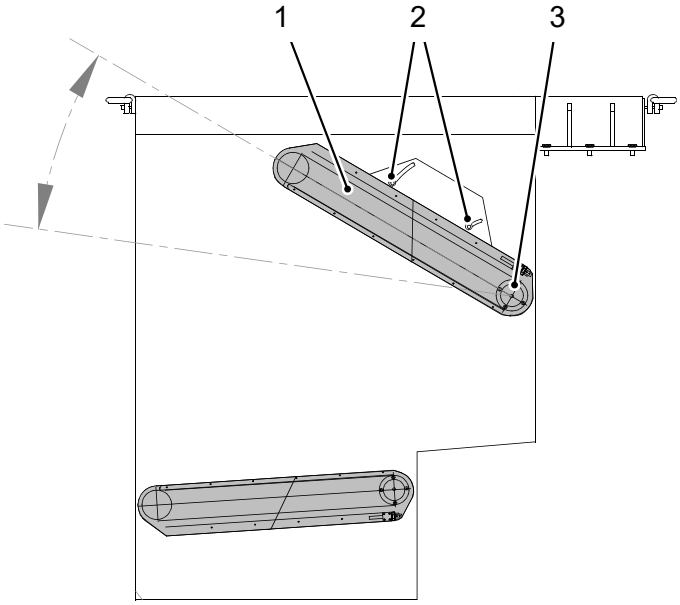

Fig. 66 Setting the cassette (0591_hoehe.z.00000.00.cgm)

1. Switch off the main switches (-Q01/-QA0) and padlock them to prevent them being switched on again.
2. Release the screws *(Fig. 66-2)*.
3. Turn the upper cassette *(Fig. 66-1)* about the pivot point *(Fig. 66-3)* to set the desired angle (range: 20° - 30°).
4. Retighten the screws *(Fig. 66-2)*.
5. Switch the main switch (-Q01/-QA0) back on.

3.10.1.2 Setting the scrapers

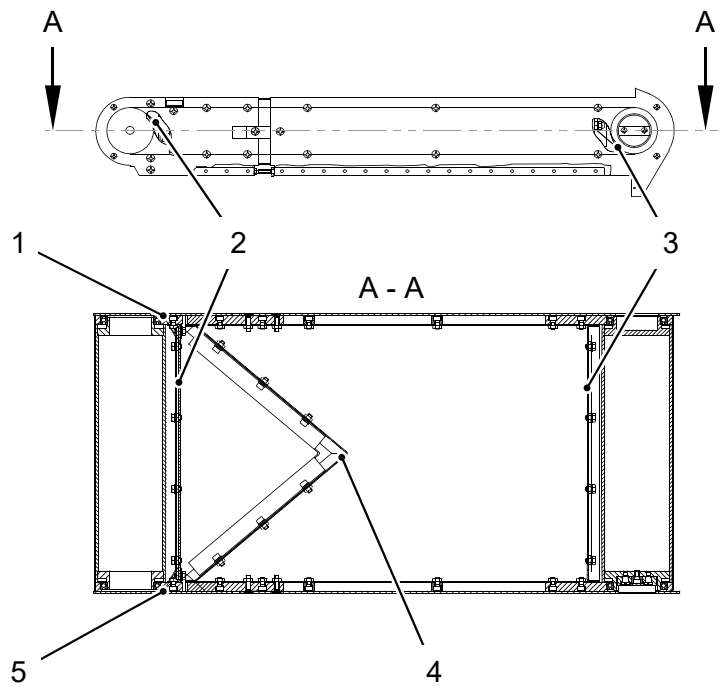

Fig. 67 Setting the scrapers (0591_schaber.z.00000.00.cgm)

Prerequisites

✓ Tobacco dust has been removed from the inside of the belt, rollers and scrapers.

Procedure

1. Remove the cassettes (↑ 3-93).
2. Slacken the belt.
3. Remove the side panels from the cassettes.
4. Pull off the belt.
5. Clean the cassettes.
6. Set the scrapers.

Setting the roller scrapers

1. One of the roller scrapers *(Fig. 67-1)* rests against the front roller.
2. Another roller scraper *(Fig. 67-3)* rests against the rear roller.
3. Fit the belt.
4. Tension the belt.

Setting the belt scrapers

1. Set the belt scrapers *(Fig. 67-1)*, *(Fig. 67-4)* and *(Fig. 67-5)* so that they rest against the belt.
2. Refit the side panels to the cassettes.
3. Fit the upper and lower cassettes (↑ 3-94).

Information
When fitting the belts, ensure that the running direction is correct!

3.10.2 Maintenance work (pre-compactor)

⚠ CAUTION

The gas pressure spring fitted contains stored energy that is released when the spring is removed.
Sudden movement of the gas pressure spring can cause minor injuries.

- Only authorized staff may work on gas springs.
- Do not disassemble and modify the gas springs.

3.10.2.1 Tensioning / replacing the drive chain

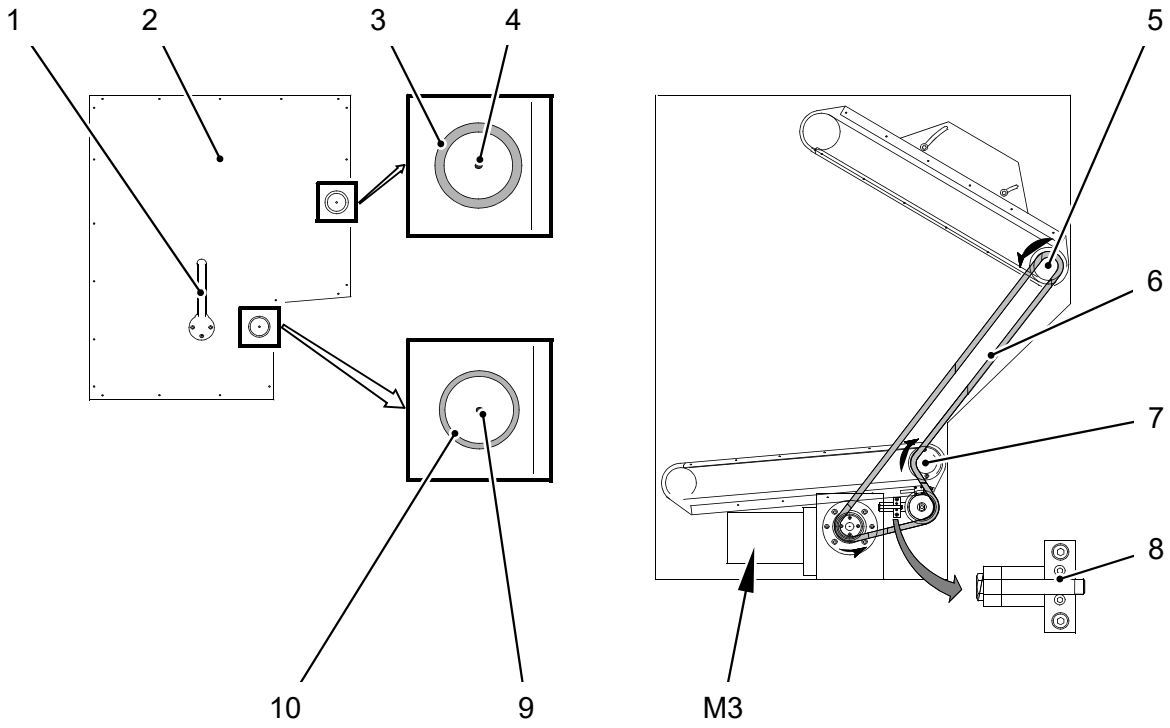

Fig. 68 Tensioning the drive chain (0591_antrieb.z.00000.00.cgm)

Procedure

1. Switch off the main switches (-Q01/-QA0) and padlock them to prevent them being switched on again.
2. Undo the securing screws *(Fig. 68-4)* and *(Fig. 68-9)* on the handwheels *(Fig. 68-3)* and *(Fig. 68-10)*.
3. Turn the handwheels counter-clockwise to remove them from the couplings *(Fig. 68-5)* and *(Fig. 68-7)*.
4. Take off the handle *(Fig. 68-1)* and remove the gasket.
5. Remove the guard *(Fig. 68-2)*. The drive chain *(Fig. 68-6)* is now accessible.
6. De-tension the drive chain with the chain tensioner *(Fig. 68-8)*.
7. Remove the drive chain and fit a new drive chain.

8. Tension the drive chain *(Fig. 68-6)* with the chain tensioner *(Fig. 68-8)*.
9. Fit the guard *(Fig. 68-2)*.
10. Refit the handle *(Fig. 68-1)* with gasket.
11. Refit the handwheels *(Fig. 68-3)* and *(Fig. 68-10)*.
12. Retighten the securing screws.
13. Switch the main switch (-Q01/-QA0) back on.

3.10.2.2 Replacing the cassettes

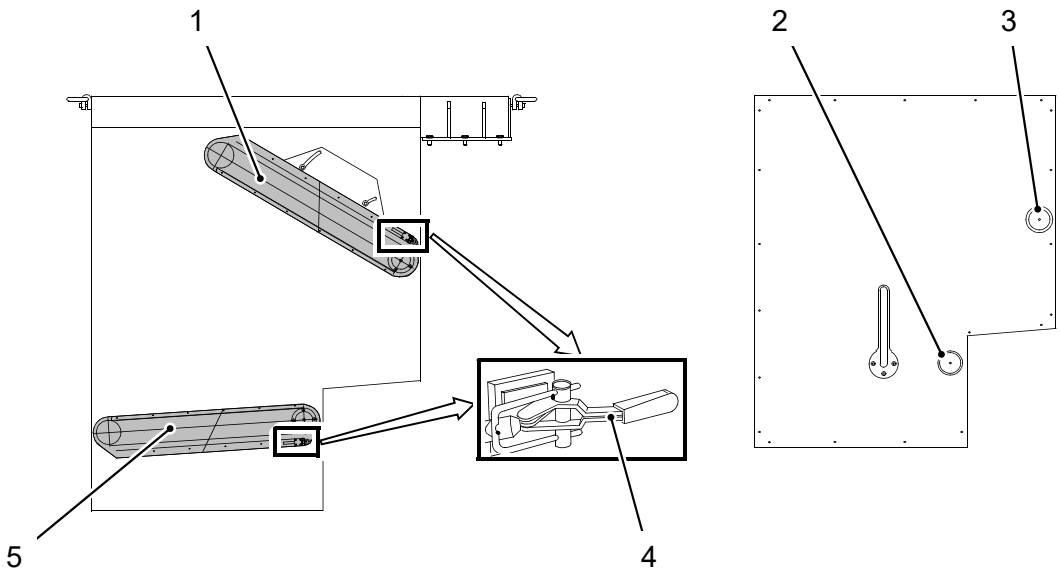

Fig. 69 Removing the cassettes *(0591_Kassette.z.00000.00.cgm)*

Prerequisites

✓ SRB compacting trough is moved away.

✓ The pre-compactor unit has been disconnected from the machine and moved away.

Removing the cassettes

1. Turn the handwheel for the cassette to be removed to the left as it will go to disengage it:
   – Handwheel *(Fig. 69-3)* for the upper cassette *(Fig. 69-1)*
   – Handwheel *(Fig. 69-2)* for the lower cassette *(Fig. 69-5)*
2. Release the quick-release connectors *(Fig. 69-4)* on both sides of the cassette to be removed.
3. Withdraw the cassette *(Fig. 69-1)* or *(Fig. 69-5)* to be removed slightly from the mount. Then take hold of the side plates and pull out.

Fitting the cassettes

1. Push the cassette *(Fig. 69-1)* or *(Fig. 69-5)* to be installed into the mount.
2. Tighten the quick-release connectors *(Fig. 69-4)* on both sides.
3. Turn the handwheel for the cassette to be fitted to the right as far as it will go to engage it.
4. Connecting the pre-compactor (see manual **“TTR.0590.xxx.xx”**).
5. Move the feeding plant (e.g. SRB compacting trough) into position.

3.10.2.3 Cleaning the belt

⚠ WARNING

Maintenance work with machine switched on! Risk of crushing due to moving/rotating parts.
Parts of the body and/or clothing can get pulled in. Risk of severe or fatal injury or damage to machinery.

- Always take particular care when working on the machine when it is switched on.
- For all work on the plant or machine, maintenance staff must wear suitable safety equipment (tight-fitting clothing, protective footwear, hair net, cut resistant gloves if necessary (cut resistance level 5) etc.).
- Doors that require access authorization must only be opened by qualified technical staff.
- Never place your hands into rotating / revolving parts (rollers, belts, etc.).
- Note that all driven machine parts represent a potential risk, especially if the machine has been stopped but not switched off and in view of the fact that motors can be started at any time.

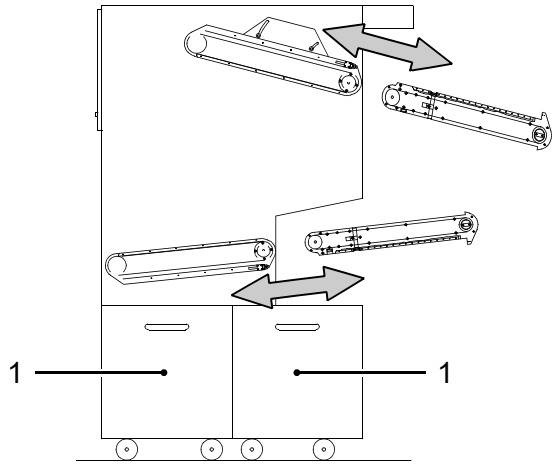

Fig. 70 *(0591_Reinigen.z.00000.00.cgm)*

Clean the belts if cut tobacco or dust has collected on or under them.

Prerequisites

✓ SRB compacting trough is moved away.

Minor belt cleaning

1. Remove the collection bins *(Fig. 70-1)*.
2. Run the tobacco cutter in manual mode, i.e. the belts on the pre-compactor run in reverse.
3. Wash the belts using water and a suitable additive.

Major belt cleaning

1. Remove the upper/lower cassette (↑ 3-93).
2. De-tension the belt.
3. Remove the belt.
4. Wash the belt using water and a suitable additive.
5. Clean the cassette.
6. Check the scrapers and correct if necessary (↑ 3-91).
7. Fit the belt.
8. Tension the belt (↑ 3-97).
9. Fit the upper and lower cassettes (↑ 3-94).

3.10.2.4 Checking belt run

⚠ WARNING

Maintenance work with machine switched on! Risk of crushing due to moving/rotating parts.
Parts of the body and/or clothing can get pulled in. Risk of severe or fatal injury or damage to machinery.

- Always take particular care when working on the machine when it is switched on.
- For all work on the plant or machine, maintenance staff must wear suitable safety equipment (tight-fitting clothing, protective footwear, hair net, cut resistant gloves if necessary (cut resistance level 5) etc.).
- Doors that require access authorization must only be opened by qualified technical staff.
- Never place your hands into rotating / revolving parts (rollers, belts, etc.).
- Note that all driven machine parts represent a potential risk, especially if the machine has been stopped but not switched off and in view of the fact that motors can be started at any time.

1. Start the tobacco cutter, with pre-compactor attached, in manual mode. The belts run in reverse.
2. Inspect the belt run.
3. If belt run is not correct, correct it; see section **“Correcting belt run and tension”** (↑ 3-97).

3.10.2.5 Correcting belt run and belt tension

⚠ WARNING

Maintenance work with machine switched on! Risk of crushing due to moving/rotating parts.
Parts of the body and/or clothing can get pulled in. Risk of severe or fatal injury or damage to machinery.

- Always take particular care when working on the machine when it is switched on.
- For all work on the plant or machine, maintenance staff must wear suitable safety equipment (tight-fitting clothing, protective footwear, hair net, cut resistant gloves if necessary (cut resistance level 5) etc.).
- Doors that require access authorization must only be opened by qualified technical staff.
- Never place your hands into rotating / revolving parts (rollers, belts, etc.).
- Note that all driven machine parts represent a potential risk, especially if the machine has been stopped but not switched off and in view of the fact that motors can be started at any time.

Information
The upper belt can be accessed from above and the lower belt from below. Ensure that the belt run is correct.

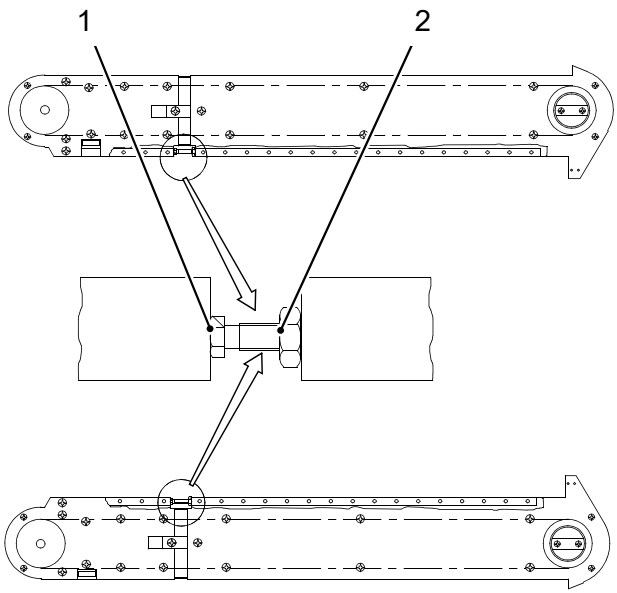

Fig. 71 Correcting belt tension (0591_Gurt.z.00000.00.cgm)

Prerequisites

✓ SRB compacting trough is moved away.

1. Start the tobacco cutter, with pre-compactor attached, in manual mode. The belts run in reverse.
2. Release the locknuts *(Fig. 71-2)* on both sides.
3. Correct belt tension:
   – Tension the belt: turn the tensioning screws *(Fig. 71-1)* counter-clockwise evenly on both sides.
   – De-tension the belt: turn the tensioning screws *(Fig. 71-1)* clockwise evenly on both sides.
4. Correct belt run:
   – Turn a tensioning screw *(Fig. 71-1)* slightly counter-clockwise or clockwise on one side. Check belt run again.

   Repeat the procedure several times until belt run is correct.
5. Finally firmly retighten the locknuts *(Fig. 71-2)*.

3.10.2.6 Replacing the belt

The belt must be replaced if it is damaged or shows signs of wear.

Prerequisites

✓ SRB compacting trough is moved away.

✓ The pre-compactor unit has been disconnected from the machine and moved away.

Procedure

1. Remove the upper and lower cassettes; see section **“Removing cassettes”** (↑ 3-93).
2. De-tension the belt via the tensioner.
3. Remove the side panels from the cassettes.
4. Pull off the belt.
5. Clean the cassettes.
6. Fit a new belt.
7. Fit the side panels to the cassettes.
8. Tension the belt via the tensioner (move the belt to and fro manually to check the belt run).
9. Fit the upper and lower cassettes; see section **“Fitting cassettes”** (↑ 3-94).

Information

On a new belt, the length of the belt should increase by approx. 1.5 % as a result of belt tension.

To obtain the correct belt tension, two index marks spaced 500 mm apart should be made on the untensioned belt. At a belt tension of approx. 1.5 %, the distance between the marks will be 507 mm when the belt is tensioned.

3.10.2.7 Checking and setting transfer between pre-compactor and tobacco cutter

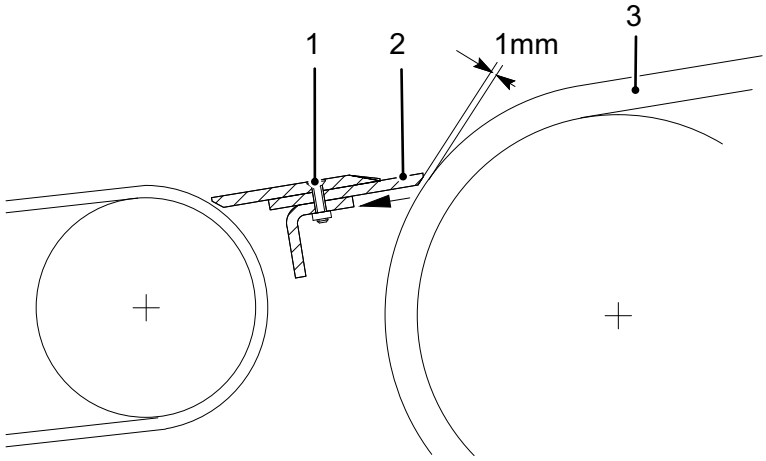

Fig. 72 *(0590_Vorverdi.z.00001.00.svg)*

Using a feeler gauge, check the gap between plate *(Fig. 72-2)* and conveyor chain *(Fig. 72-3)* and adjust if necessary.

Procedure

1. Release the screws *(Fig. 72-1)*.
2. Set a gap of 1 mm between plate *(Fig. 72-2)* and conveyor chain *(Fig. 72-3)* and check this with a feeler gauge.
3. Tighten the screws *(Fig. 72-1)* and check the gap. Adjust if necessary.

3.11 Cleaning the viewing windows

NOTICE

Unsuitable cleaning agents and sharp-edged tools can damage the viewing windows (scratches)
Using unsuitable cleaning agents and tools can cause damage to the viewing windows and result in limited vision

- When cleaning the viewing windows, never use caustic or abrasive cleaning agents or sharp-edged tools.
- Clean the viewing windows only with a soft (microfibre) cloth and clear, warm water or with a brush.

The viewing windows fitted on the machine must be cleaned regularly (at least once a week).

3.12 Options

3.12.1 Individual dust extraction system (optional)

Information
When carrying out setting and maintenance work always be sure to observe the operating instructions for the extraction unit supplied by the manufacturer.

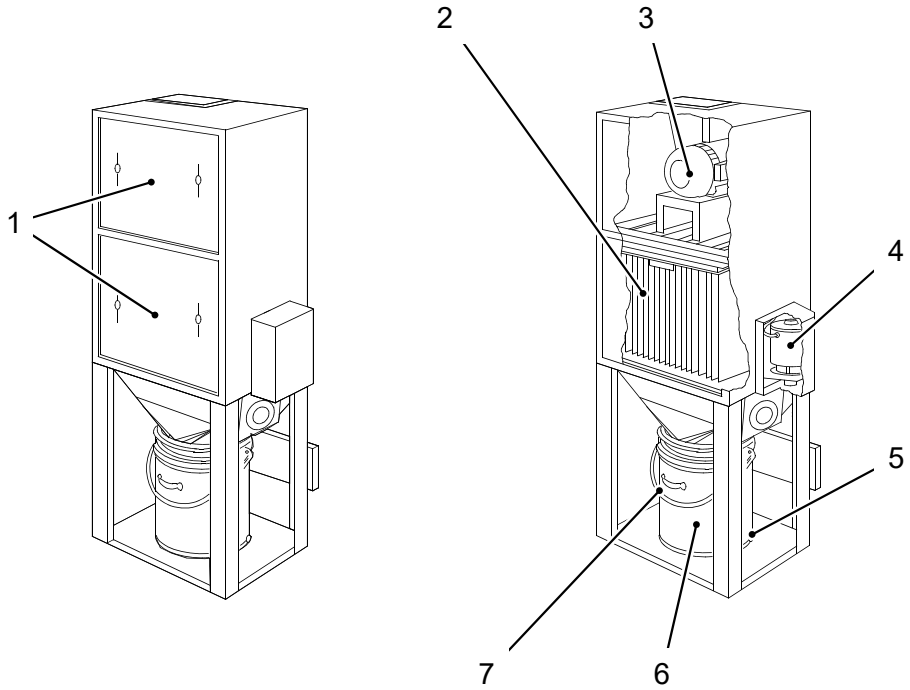

Fig. 73 Individual dust extraction system (0591_Entstaub.z.00000.00.cgm)

Replacing the fabric insert

1. Switch off the main switch (-Q01/-QA0) and padlock it to prevent it from being switched on again. The suction air fan motor *(Fig. 73-3)* is switched off.
2. Take off the access doors *(Fig. 73-1)*.
3. Release the nuts on the filter element *(Fig. 73-2)* and pull out the filter element.

Information
Refer to the manufacturer's documentation for instructions on how to clean the filter element.

4. Remove the wire mesh supporting frame from the filter bags and remove the packing collar and the filter element from the supporting frame.

5. Place the new fabric insert on the supporting frame and insert the filter bags between the tubular holders. Pull the packing collar over the supporting frame.
6. Refit the wire mesh supporting frame in the filter bags and push the supporting frame into the guide rail until the bags touch the cleaning device.
7. Align the filter bags with the corresponding openings of the cleaning device.
8. Push the supporting frame completely into the filter element and refit it in the fan chamber.
9. Refit the access doors *(Fig. 73-1)*.

Emptying the dustbin

1. Pull the handle *(Fig. 73-7)* upwards to release the dustbin *(Fig. 73-6)* from the seal.
2. Pull the dustbin *(Fig. 73-6)* out to the front, empty and clean it.
3. Push the dustbin *(Fig. 73-6)* back as far as the stop pin *(Fig. 73-5)*.
4. Push the handle *(Fig. 73-7)* down to press the dustbin against the seal.

3.12.2 Chain dust extraction (optional)

⚠ CAUTION

Proper handling and observance of the operating instructions ensure safe operation

- Only set the industrial dust extractor for chain dust extraction into operation when the original fine filter is fitted.
- Do not make any modifications to units, drive, filter cartridge and other devices. Do not change the speed of the motor / suction turbine. The speed of the motor / suction turbine combination is set up for a frequency of 50 or 60 Hz.

Information

- The dust drawer of the industrial dust extractor must be emptied at specific intervals.
- The suction air cleaned in the industrial dust extractor is guided to the front through the cover on the suction turbine and out of the housing. This is done by means of a special foam mat that is inserted as a distributor.

Information
When carrying out setting and maintenance work always be sure to observe the operating instructions for the extraction unit supplied by the manufacturer.

3.12.2.1 Emptying the dust drawer on the industrial dust extractor

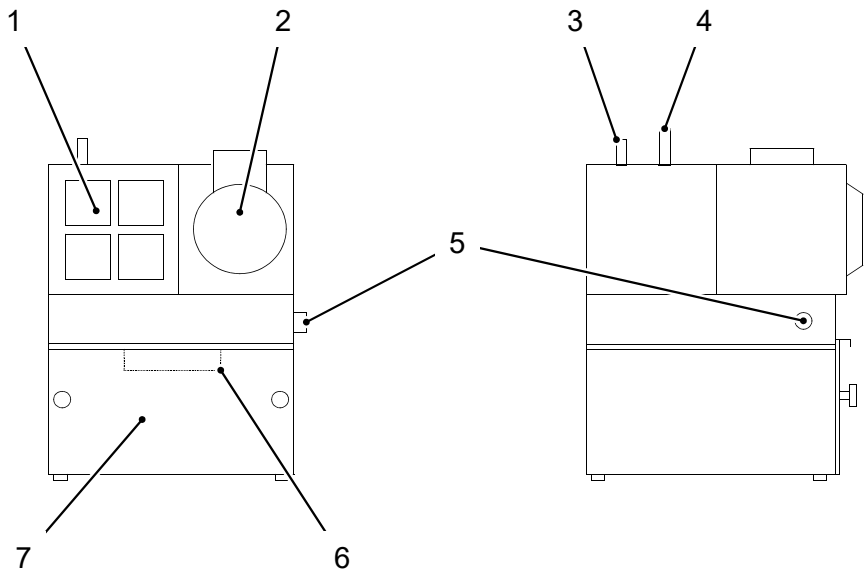

Fig. 74 Overview: industrial dust extractor (0591_Int.z.00000.00.cgm)

Overview: industrial dust extractor

- Filter mats *(Fig. 74-1)*
- Motor *(Fig. 74-2)*
- Compressed air connection *(Fig. 74-3)*
- Electrical connection *(Fig. 74-4)*
- Suction line connector (suction hose connection) *(Fig. 74-5)*
- Filter cartridge *(Fig. 74-6)*
- Dust drawer *(Fig. 74-7)*

Emptying the dust drawer

Information
The dust drawer *(Fig. 74-7)* can be lined with a robust plastic waste bag to facilitate emptying.

For this purpose, carefully fit a robust plastic waste bag in the drawer and fold the sides over the rim of the drawer.

Caution:

Empty the dust drawer only with the extraction system switched off.

1. Unlock the dust drawer *(Fig. 74-7)* with the lever. The drawer lowers slightly.
2. Pull the plastic waste bag up at the sides, tie it, pull it out and dispose of it. Insert a new plastic waste bag.
3. Check the filter cartridge for soiling sticking to it.

Information
If there is dust adhering to the filter cartridge *(Fig. 74-6)*, the filter must be washed out (see the section headed **"Industrial dust extractor: washing out the filter cartridge"** below).

4. Push the dust drawer in again completely and lock it via the lever.

Industrial dust extractor: washing out the filter cartridge

Procedure for integrated chain dust extraction system

Removing the filter cartridge

1. Pull out the dust drawer *(Fig. 74-7)* completely.
2. Unhook the supporting bar under the filter cartridge.
3. Move the supporting bar to the left while holding the cartridge. As soon as the cartridge is free, guide it vertically downwards and remove it.

Washing out the filter cartridge

1. Carefully blow off dry extracted particles using compressed air, ensuring that the air jet is not applied vertically onto the filter fleece.
2. Wash out the filter cartridge as follows:
   – Prepare lukewarm water with a grease-dissolving cleaning agent.
   – Place the filter cartridge in a cleaning solution and, if necessary, allow it to soak for a few minutes.
   – Swirl the filter cartridge around thoroughly in the cleaning solution.

   Note: Do not rub or brush the filter cartridge!
3. After washing, rinse the filter cartridge in clear water.
4. Dry the filter cartridge by putting it in a clean, well-ventilated place.

Information
After washing, the filter must first be completely dried before it can be used again for operation.

Checking the filter

1. Check the filter cartridge before refitting it.
2. If the filter fleece is damaged, no longer use the filter cartridge since dust would then penetrate through the filter.
3. If the filter can no longer be cleaned, the pores may be blocked. Replace the filter if this is the case.

Fitting the filter cartridge

1. Insert the filter cartridge in the housing and carefully lift it upwards. There are guide pins in the sealing plate at the top to enable exact positioning.
2. Position the supporting bar under the filter cartridge from the left and guide it to the right.
3. Pull the spring on the right downwards and mount the supporting bar in the ring.
4. Check that the filter cartridge is firmly seated and makes perfect contact with the sealing plate at the top.
5. Fit the drawer *(Fig. 74-7)* and close it.

Procedure for external chain dust extraction system

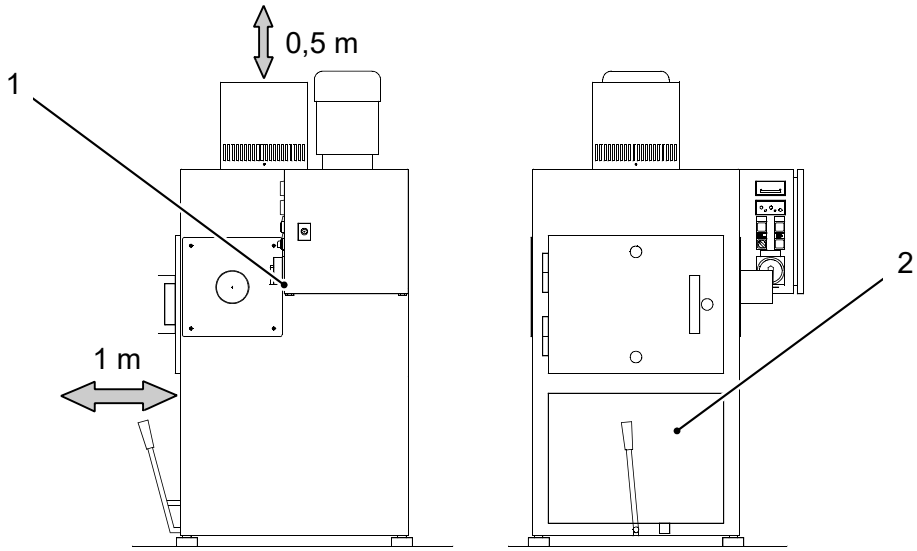

Fig. 75 External chain extraction system (0591_Ext.z.00000.00.cgm)

Removing the filter cartridge

1. Detach the compressed air connection *(Fig. 75-1)* from the dust extractor and activate filter flushing. The tank is emptied.
2. Open the door of the dust extractor.
3. Release the mounting below the filter cartridge, unhinge it and fold it downwards.
4. Detach the compressed air connection from the filter flushing device.
5. Guide the filter cartridge vertically downwards and lift it up and out of the housing.

Washing out the filter cartridge

1. Carefully blow off dry extracted particles using compressed air, ensuring that the air jet is not applied vertically onto the filter fleece.

Information
The filter cartridge should not be cleaned with compressed air near the machine because dust and floating particles could be deposited in areas that are difficult to access, which could make cleaning more difficult.

2. Wash out the filter cartridge as follows:
   - Prepare lukewarm water with a grease-dissolving cleaning agent.
   - Place the filter cartridge in a cleaning solution and, if necessary, allow it to soak for a few minutes.
   - Swirl the filter cartridge around thoroughly in the cleaning solution.

     Note: Do not rub or brush the filter cartridge!
3. After washing, rinse the filter cartridge in clear water.
4. Dry the filter cartridge by putting it in a clean, well-ventilated place.

Information
After washing, the filter must first be completely dried before it can be used again for operation.

Checking the filter

1. Check the filter cartridge for damage before refitting it.
2. Do not use the filter cartridge any longer if the fleece is damaged because otherwise dust will penetrate through the filter.
3. If the filter can no longer be cleaned, the pores may be blocked. Replace the filter if this is the case.

Fitting the filter cartridge

1. Insert the filter cartridge in the suction extractor housing with the bottom part first.
2. Connect the compressed air connection of the filter flushing device.
3. Lift the filter cartridge upwards, guide pins position the cartridge in the proper location.
4. Insert the mushroom-shaped tip of the filter holder in the centre of the cartridge.
5. Tension the holder and attach it. Check that the filter is firmly secured.
6. Close the extractor housing door.
7. Connect the compressed air supply to suction extractor housing.

3.13 Cooling system

Information
When carrying out setting and maintenance work always be sure to observe the operating instructions for the cooling unit supplied by the manufacturer.

Actuator	Device which converts an input signal (e.g. electrical, pneumatic) to another form of energy (e.g. mechanical motion, flow of compressed air, light), thus intervening in the process to be controlled. Actuators are motors (drives), solenoid valves, pneumatic cylinders.
Auxiliary mains supply	Voltage infeed which is still live even if the main switch is switched off (orange cabling).
Chain dust extraction (optional)	The purpose of the chain dust extraction system is to extract the tobacco dust at the bottom conveyor chain and clean it using a filter. This increases the intervals between maintenance.
Compacting belt (on tobacco cutter KT2-L125)	The compacting belt is a belt installed upstream of the upper conveyor chain and pre-compacts the lamina to the infeed height of the upper conveyor chain.
Compacting trough	Compacting trough type SRB-L (for lamina) or SRB-S (for stems) supplies the tobacco cutter with a homogeneous flow of material.
Compaction	Process during which the tobacco supplied is compacted to many times its original bulk weight.
Compressed air system	Used to supply and control the compressed air consumers with compressed air. The machine derives its compressed air supply either from a central compressed air supply system or from a separate compressor.
Conveyor chains	The conveyor chains transport the lamina or stems to the mouthpiece. The pressure exerted by the conveyor chains compacts the tobacco to the required cut density.
cpi	cpi = cuts per inch. The number of cuts to be performed per inch. At the request of the customer, the cutting width can be specified in cpi instead of in mm.
Dressing unit	The dressing unit cleans and dresses the face of the grinding wheel. This is performed using a dressing diamond which passes over the face of the grinding wheel whenever the grinding unit reaches its final position.
Dust extraction system	Tobacco and grinding dust is extracted from the tobacco discharge through an extraction pipe. Dust can either be extracted via the customer's central dust extraction system (CENTRAL) or via an individual dust extraction system (INDIVIDUAL).
Emergency stop	Safety system used to initiate an emergency shutdown of the line. If one of the emergency-stop buttons is operated, the entire power supply for the switch cabinet is switched off. This causes all drives in the switch cabinet control area to stop. By passing on the signal, adjacent control areas can also be switched off. The power supply is switched off immediately or with a delay, depending on the emergency stop category. Delayed shutdown can be required in order to decelerate the drives in a controlled manner.
Grinder unit	The grinder unit sharpens the knives continuously. The knives are ground uniformly by a grinding wheel (cup wheel) as it moves to and fro on a sliding mechanism, mounted parallel to the knife drum axis.
HMI	**H**uman-**M**achine-**I**nterface = control unit for controlling and monitoring the line.

Knife advance	The knife advance system pushes the knives forwards. The rate is dependent on the speed of the knife drum. This is necessary as the knives wear down and become shorter over time.
Knife drum	The knives on the rotating knife drum cut the lamina or stems which are held by the mouthpiece. The knife drum can be fitted with max. 8 knives.
Mouthpiece	The mouthpiece holds the compressed lamina or stems during cutting. It is located between the conveyor chains and the knife drum.
Parameters	Independent variables which are kept constant during operation, but which can be changed after the machine is stopped (or even during the operation of the machine). Indicate the operands triggered in the programmable logic controller using numeric or alphanumeric characters. The manufacturer presets basic parameters when the machine is delivered (so-called factory settings). These parameters are optimized during commissioning and operation of the machine at the customer's (so-called customer setting).
Pneumatic cylinder	A pneumatic drive for linear and rotary movements.
Position encoder	Device to determine absolute mechanical positions.
Power mains supply	Voltage infeed for the power supply which is switched on and off via the main switch.
Pre-compactor (on tobacco cutter KT2–L160 only)	The pre-compactor consists of an upper and a lower belt which pre-compact the lamina to the infeed height of the upper conveyor chain.
Protective doors/flaps	Safety devices on the machine.
Sensors	Devices for detecting statuses. Examples of sensors are proximity switches, photosensors, light barriers, limit switches, transmitters, etc.
Shaft encoder	Device to determine absolute angular positions.
SRB	Compacting trough which feeds the tobacco cutter.
Tobacco discharge	Conveying the tobacco away after cutting.
Tobacco feed	Conveying system which transports the tobacco to the machine.

A

Adjusting the carriage guide 3-54

B

Belt
- Cleaning 3-94
- Replacing 3-98

C

Cassettes
- Fitting 3-94
- Removing 3-93
- Setting the height 3-90

Chain dust extraction (optional) 3-101
- Emptying the dust drawer on the industrial dust extractor 3-102

Checking the part number 3-2

Checking the software version 3-2

Cleaning 2-2

Cleaning the brass cover on the grinder unit 3-69

Cleaning the dustbin for the grinder unit 3-73

Cleaning the transparent windows 3-99

Compacting belt 3-83
- Checking and correcting belt run and tension 3-86
- Removing and fitting 3-84
- Replacing the belt 3-88
- Setting the height of the compacting belt 3-83
- Tensioning the drive chain 3-85

Compressed air system 3-82

Conveyor chains 3-4
- Cleaning (off the machine) 3-28
- Cleaning (standard procedure) 3-27
- Fitting the lower conveyor chain 3-20
- Oil change 3-24
- Replacing the flanged wheels 3-26
- Setting the scraper 3-5
- Tensioning the lower conveyor chain 3-11
- Tensioning the upper conveyor chain 3-11
- Upper conveyor chain - checking sag and tensioning 3-8
- Wear limits for chain links and sliding plates 3-12

Cooling system 3-105

Correcting belt run and tension 3-97

Cutting width measurement 2-8

D

Daily cleaning of the steel belts 3-69

Dressing diamond
- Adjusting when the bottom knife bar is replaced 3-60
- Adjusting when the bottom knife bar is worn 3-59
- Replacing 3-58

E

Electrostatic charges 3-2

F

Fitting the angular-contact ball bearings on the grinding wheel drive 3-64

G

Greases 2-10

Grinder unit 3-49
- Adjusting the carriage guide 3-54
- Adjusting the dressing diamond 3-59, 3-60
- Checking and setting advance 3-50
- Cleaning the brass cover on the grinder unit 3-69
- Cleaning the dustbin for the grinder unit 3-73
- Daily cleaning of the steel belts 3-69
- Fitting the angular-contact ball bearings 3-64
- Monthly cleaning of the steel belts 3-72
- Readjusting the grinder unit limiting points 3-68
- Regreasing the grinding carriage bushes 3-66
- Replacing the dressing diamond 3-58
- Replacing the grinding wheel 3-56
- Retensioning the grinder unit chain drive 3-67
- Retensioning the tension spring on the lever of the diamond holder 3-62
- Retensioning the tension spring on the steel belt 3-63
- Setting the advance shaft brake 3-55
- Setting the grinding profile 3-52

I

Individual dust extraction system (optional) 3-100
- Emptying the dustbin 3-101
- Replacing the fabric insert 3-100

K

Knife drum 3-29
- Changing the knife advance gear unit 3-33
- Checking the holding brake 3-47
- Cleaning the gaps between the knife drum and the cutter head frame 3-48
- Knife adjustment 3-30
- Knife advance gear unit maintenance 3-47
- Lubricating the ball joint on the knife advance unit 3-46
- Replacing the knives 3-44
- Replacing the V-belts 3-43
- Setting bearing play 3-36
- Setting the knife advance 3-31

L

Lubricants 2-9

M

Maintenance and cleaning 2-1

Maintenance and cleaning schedule 2-3

Maintenance and cleaning work
- Performing cleaning work 2-2
- Performing maintenance work 2-2

Making basic settings 3-2

Monthly cleaning of the steel belts 3-72

Mouthpiece 3-74
- Removing and fitting 3-77
- Replacing the bottom knife bar 3-79
- Replacing the wedge rail 3-78
- Setting 3-75

O

Oil change, conveyor chain drives 3-24

Oils 2-10

Overview, settings 1-1

P

Pre-compactor
- Checking belt run 3-96

Pre-compactor
Clean belt 3-94
Correcting belt run and tension 3-97
Fitting the cassettes 3-94
Removing the cassettes 3-93
Replacing the belt 3-98
Setting the height of the upper cassette 3-90
Setting the scrapers 3-91
Tensioning/replacing the drive chain 3-92
Transfer pre-compactor – tobacco cutter, checking and setting 3-99

R

Readjusting the grinder unit limiting points 3-68

Regreasing the grinding carriage bushes 3-66

Replacing the bottom knife bar 3-79

Replacing the wedge rail 3-78

Retensioning the grinder unit chain drive 3-67

Retensioning the tension spring on the lever of the diamond holder 3-62

Retensioning the tension spring on the steel belt 3-63

Roller chains - checking the tension and retensioning 3-6

S

Setting proximity switches
General 1-4

Setting sensor -B17 1-9

Setting sensor (-B16) 1-8

Setting the advance shaft brake 3-55

Setting the proximity switches
Setting proximity switch (-B13) 1-4
Setting proximity switch (-B14) 1-7

Setting the scraper 3-5

Setting the scrapers 3-91

Setting ultrasonic proximity switch (-B19) 1-11

Settings, overview 1-1

SRB compacting trough
Compacting trough control (optional) 3-3

T

Tensioning the compacting belt chain 3-85

Thread-locking fluid 2-11

W

Work
Cleaning work 2-2
Maintenance work 2-2