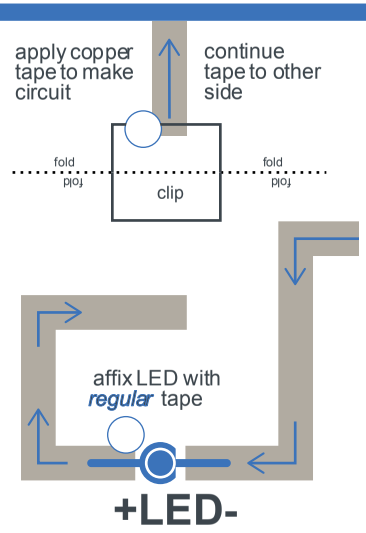
apply copper tape to make circuit
continue tape to other side
fold
fold
clip
affix LED with regular tape
+LED-

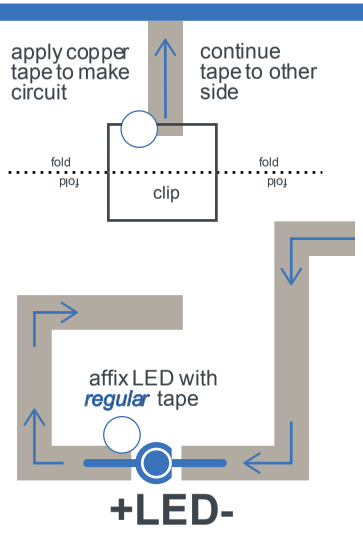
apply copper tape to make circuit
continue tape to other side
fold
fold
clip
affix LED with regular tape
+LED-

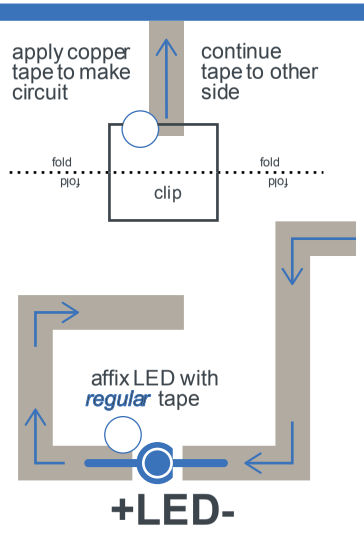
apply copper tape to make circuit
continue tape to other side
fold
fold
clip
affix LED with regular tape
+LED-

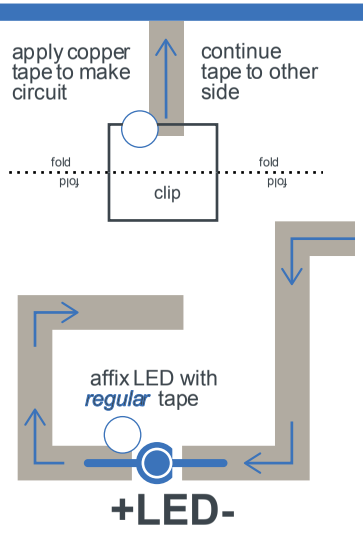
apply copper tape to make circuit
continue tape to other side
fold
fold
clip
affix LED with regular tape
+LED-

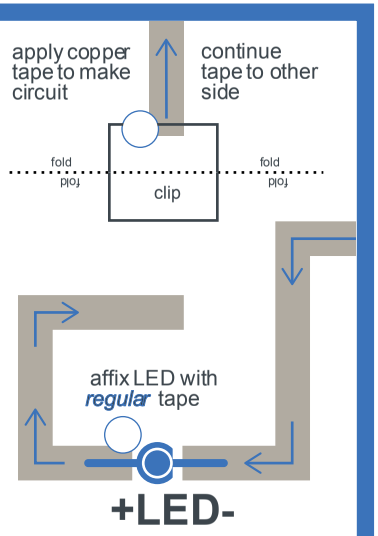
apply copper tape to make circuit
continue tape to other side
fold
fold
clip
affix LED with regular tape
+LED-

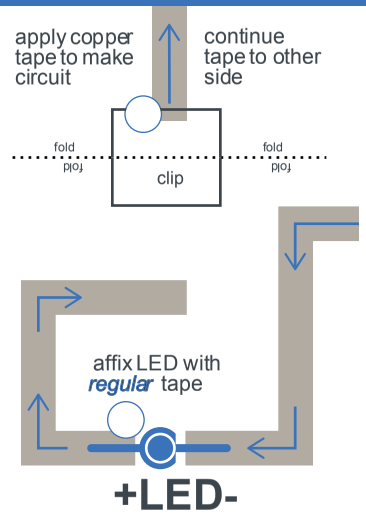
apply copper tape to make circuit
continue tape to other side
fold
fold
clip
affix LED with regular tape
+LED-

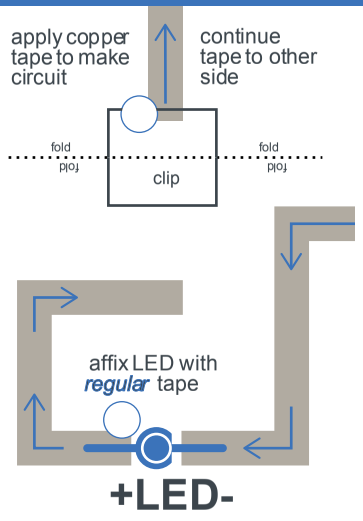
apply copper tape to make circuit
continue tape to other side
fold
fold
clip
affix LED with regular tape
+LED-

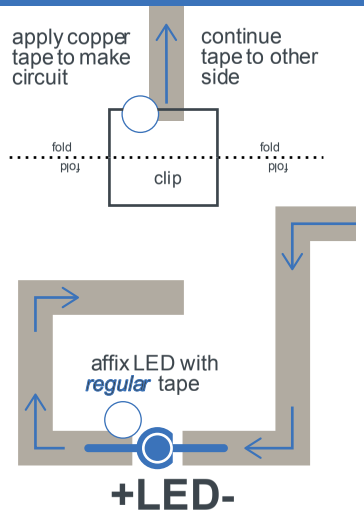
apply copper tape to make circuit
continue tape to other side
fold
fold
clip
affix LED with regular tape
+LED-

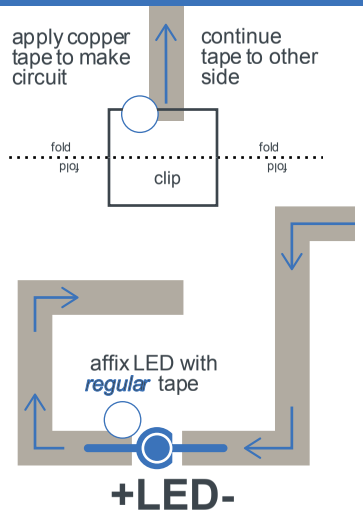
apply copper tape to make circuit
continue tape to other side
fold
fold
clip
affix LED with regular tape
+LED-

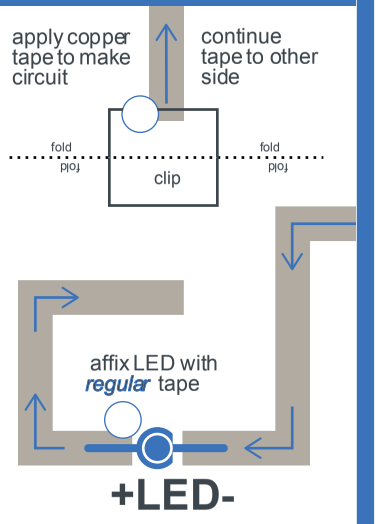
apply copper tape to make circuit
continue tape to other side
fold
fold
clip
affix LED with regular tape
+LED-

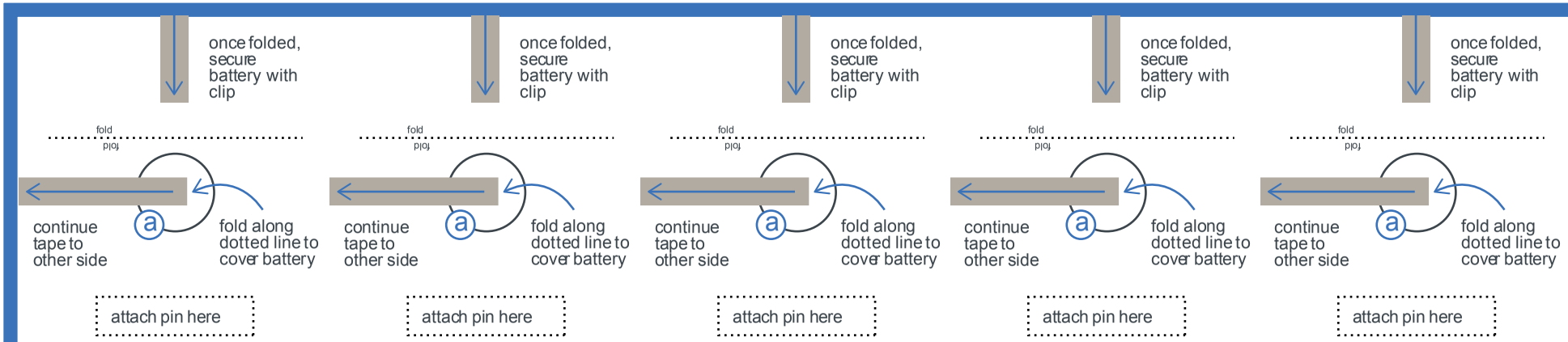

Full instructions at
sparkfun.com/papercircuitpin

Full instructions at
sparkfun.com/papercircuitpin

Full instructions at
sparkfun.com/papercircuitpin

Full instructions at
sparkfun.com/papercircuitpin

Full instructions at
sparkfun.com/papercircuitpin

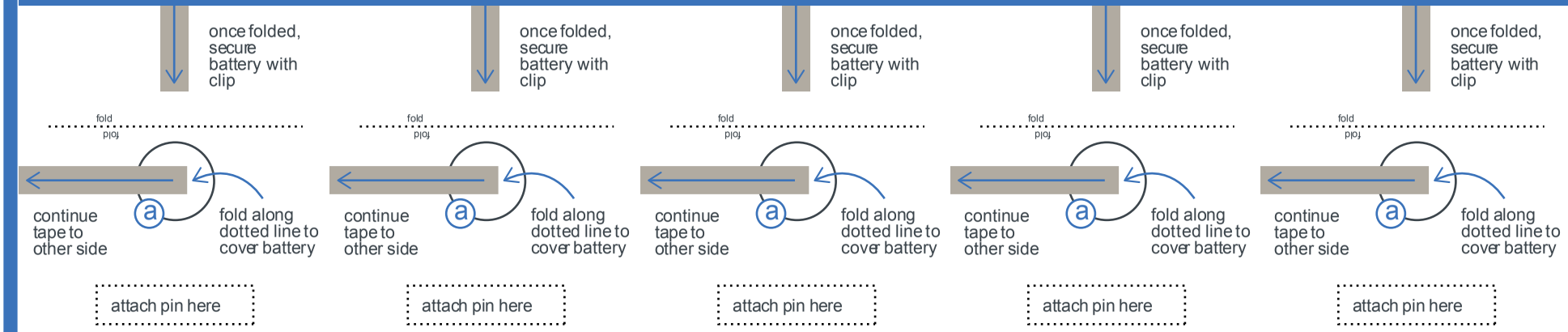

Full instructions at
sparkfun.com/papercircuitpin

Full instructions at
sparkfun.com/papercircuitpin

Full instructions at
sparkfun.com/papercircuitpin

Full instructions at
sparkfun.com/papercircuitpin

Full instructions at
sparkfun.com/papercircuitpin