MASTER IN COMPUTER VISION Barcelona

Ball Action Detection

Classification & Spotting

Group 1

Benet Ramió · Diego Hernández · Valentin Micu · Xavier Pacheco · Oriol Juan

Module C6: Video Analysis

Contents

01 Introduction

02 Previous Weeks

03 DETR

04 Best Model

05 Final Results

06 Conclusions

Contents

01 Introduction

02 Previous Weeks

03 DETR

04 Best Model

05 Final Results

06 Conclusions

Motivation

- ➔ Many sports videos are available, but the key actions within them are really sparse.
- ➔ With Computer Vision we could turn raw footage into insights for analysts and fans.
- ➔ To that end, we need models that capture, at any time, the events we are keen on.

Single frames lack context. True understanding requires spatio-temporal video analysis.

Dataset: SoccerNet

SoccerNet
Dataset and Challenges

- ➔ **Data:** 7 Full Soccer Matches
- ➔ **Split:** 4 Train | 1 Validation | 2 Test
- ➔ **Classes:** 12 Ball Actions + *BACKGROUND*

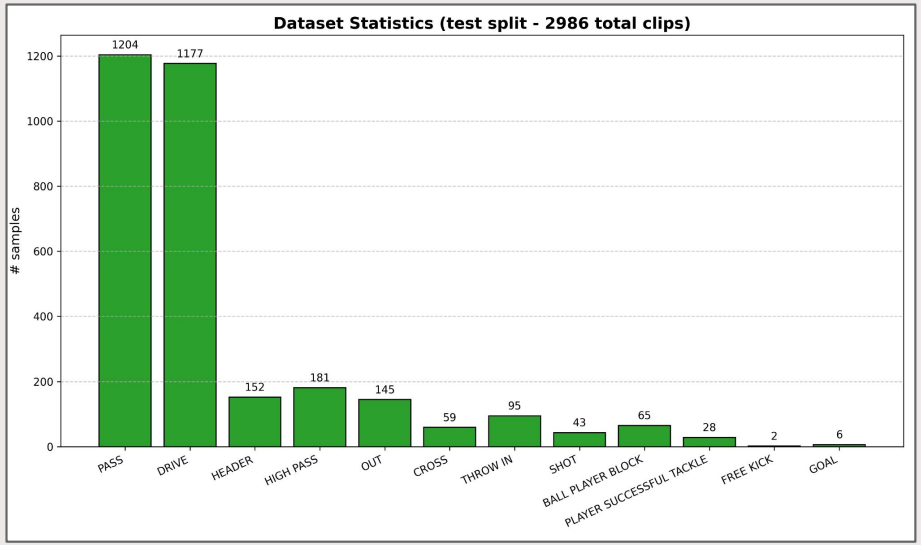

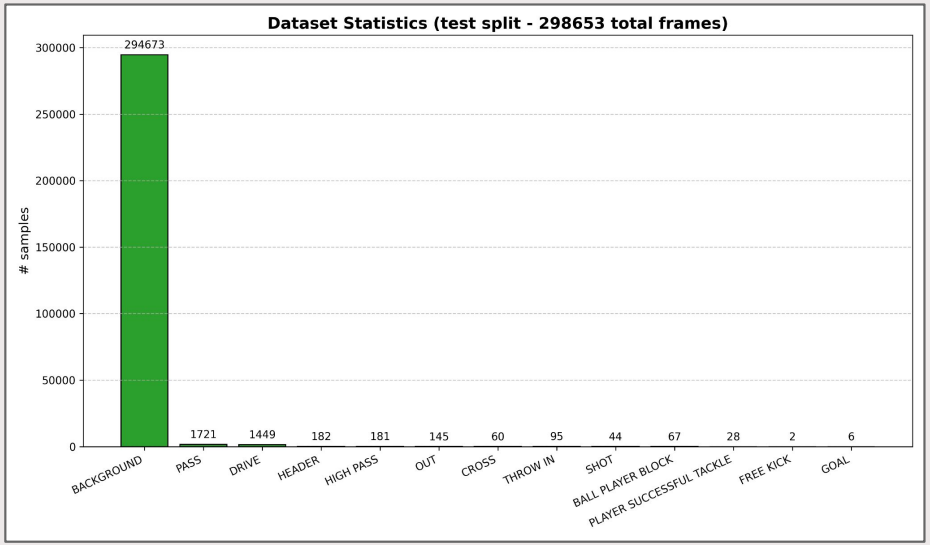

Dataset: SoccerNet

- ➔ Actions span across multiple frames, but the dataset provides single-frame annotations.
- ➔ Annotations are semantically inconsistent → Their visual patterns have high variance.
- ➔ Frame-perfect spotting is an ill-posed problem → Evaluation with **temporal tolerance***.

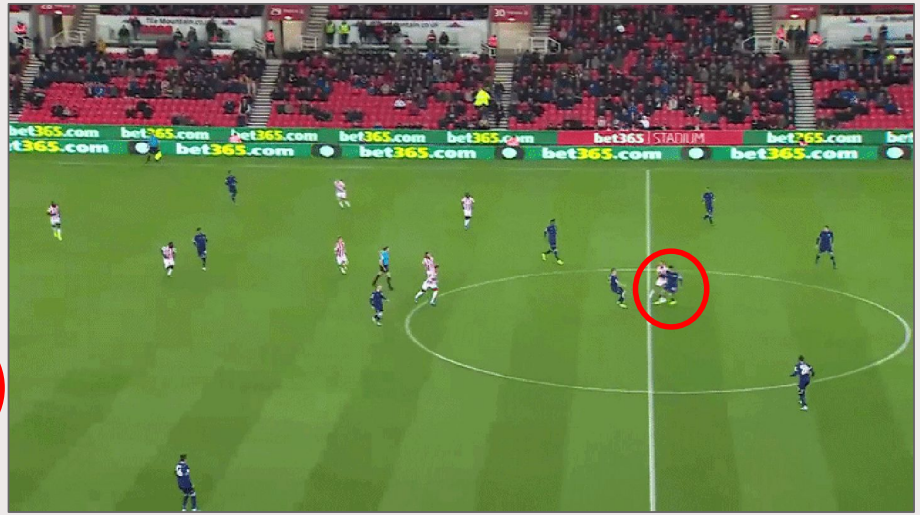

Annotation A: *Ball Already Released* ***GT:*** *PASS* ***Annotation B:*** *Instant of Impact*

** We use a temporal tolerance of 1s in evaluation unless otherwise stated.*

What do we aim for?

Goal:

➔ Design a model that detects the 12 ball actions in soccer videos at high temporal precision.

Timeline:

➔ A three-week progression from basic clip classification to precise action spotting.

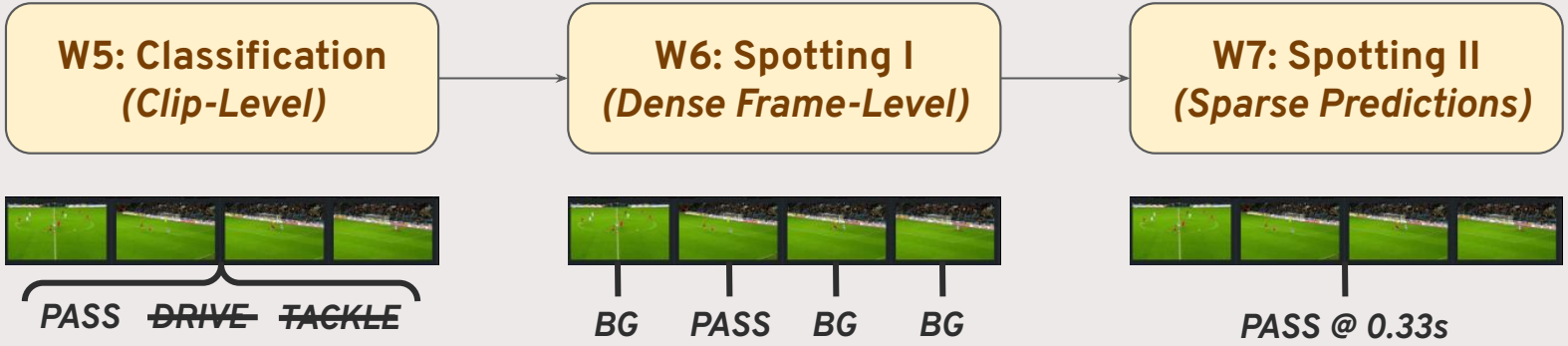

Contents

01 Introduction

02 Previous Weeks

03 DETR

04 Best Model

05 Final Results

06 Conclusions

W5: Classification

➔ Decide if an action is present in a clip (*multi-label classification*).

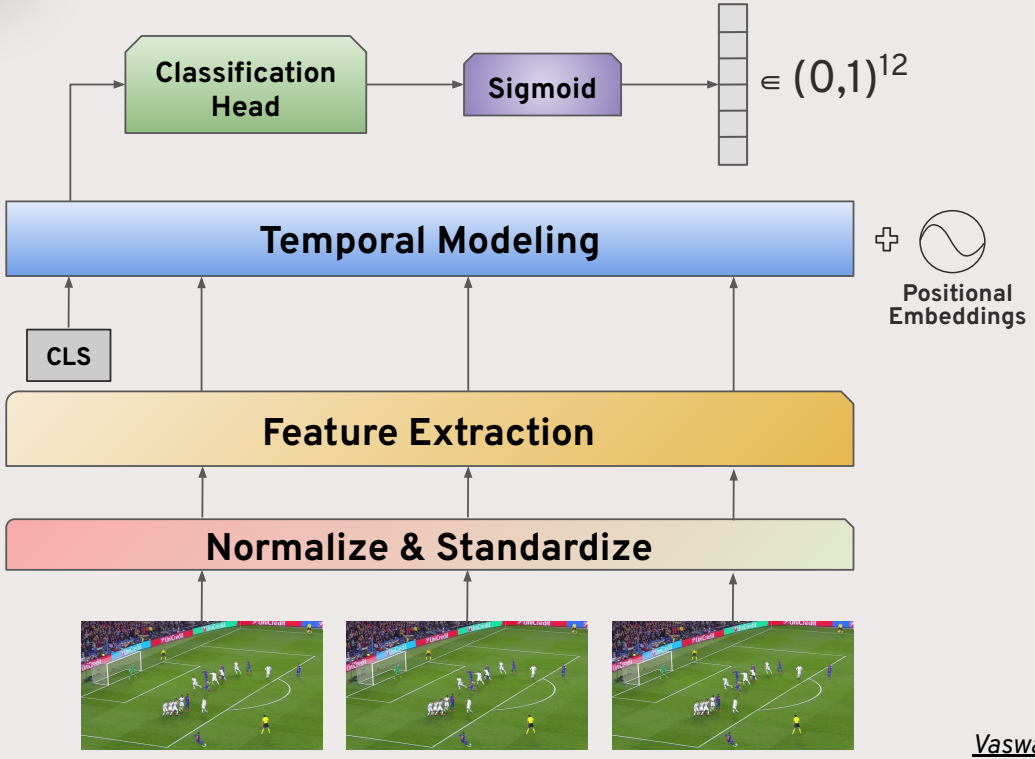

Technical details:

Feature Extraction:
- ViT base *(last 3 layers fine-tuned)*.

Temporal Modeling:
- 2 transformer layers.
- 4 attention heads.

Classification Head:
- A fully-connected layer.

Vaswani et al. (2017). Attention is all you need. In NeurIPS.
Dosovitskiy et al. (2021). An image is worth 16x16 words. In ICLR.

W5: Classification

Takeaway 1:

➔ Temporal aggregation worked, but convolutional backbones are more efficient with this data.

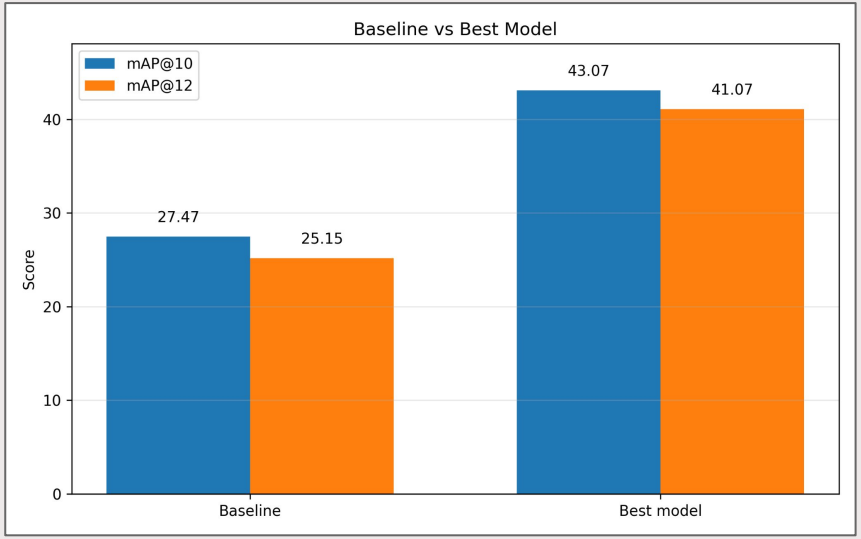

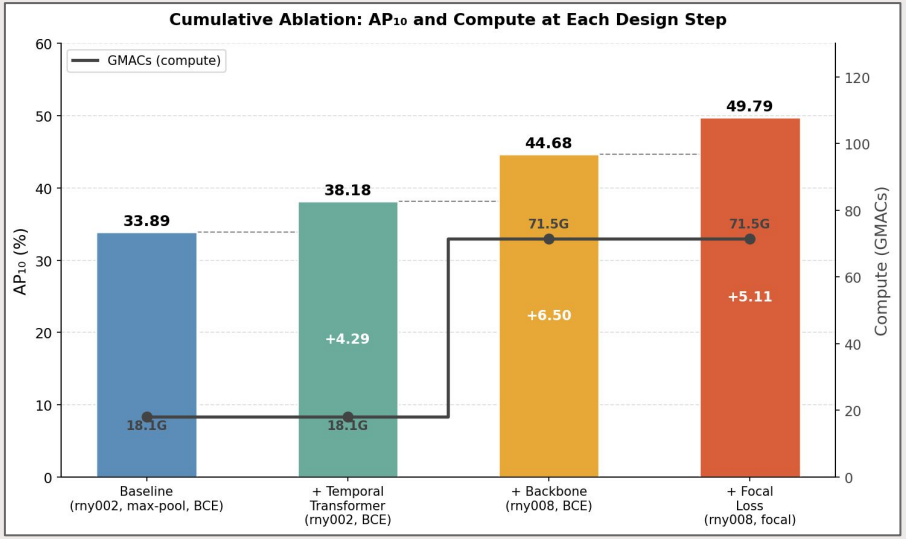

Our W5 best model: 843.28 GMACs

Team 7's W5 best model: 71.5 GMACs

W5: Classification

Takeaway 2:

➔ The dataset is hugely imbalanced. Without enough supervision, the model will be biased.

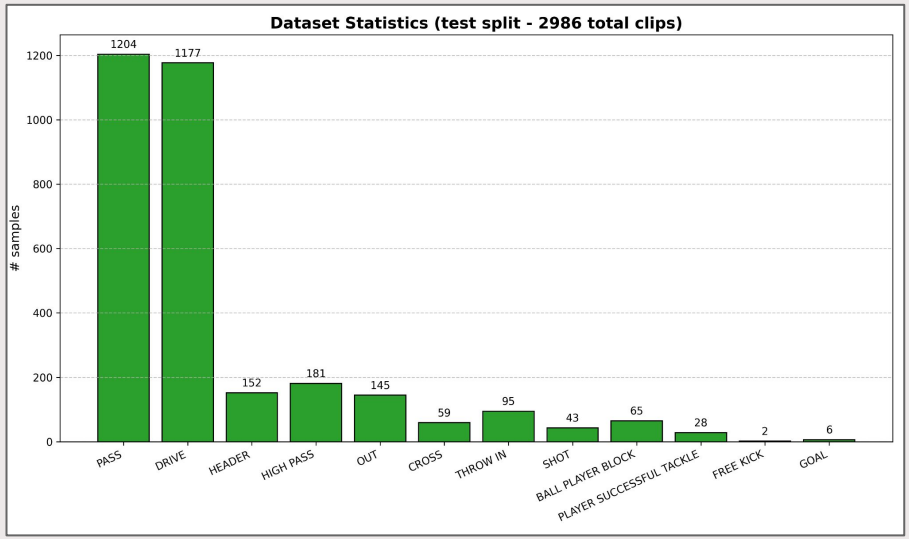

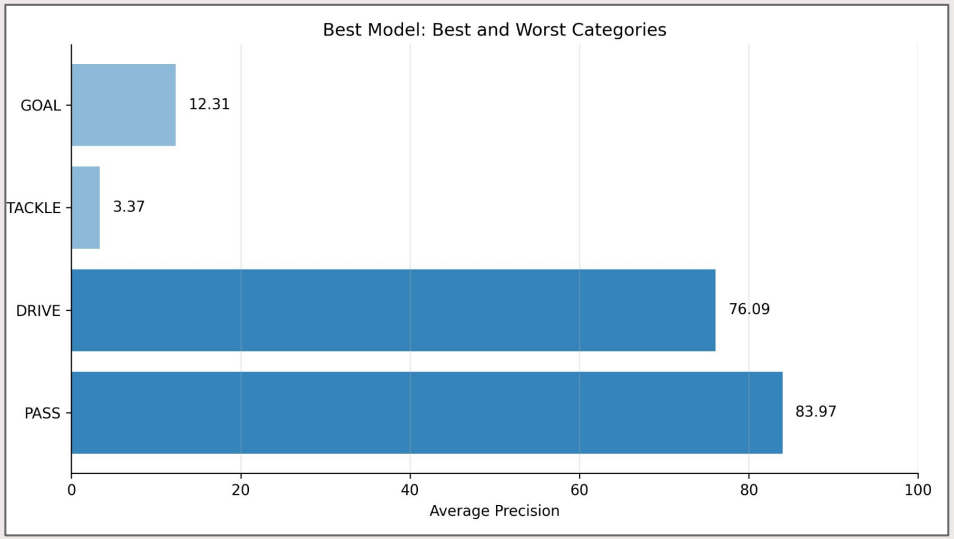

W6: Spotting I

➔ Decide which is the category of a each frame (among the 12 classes + *BACKGROUND*).

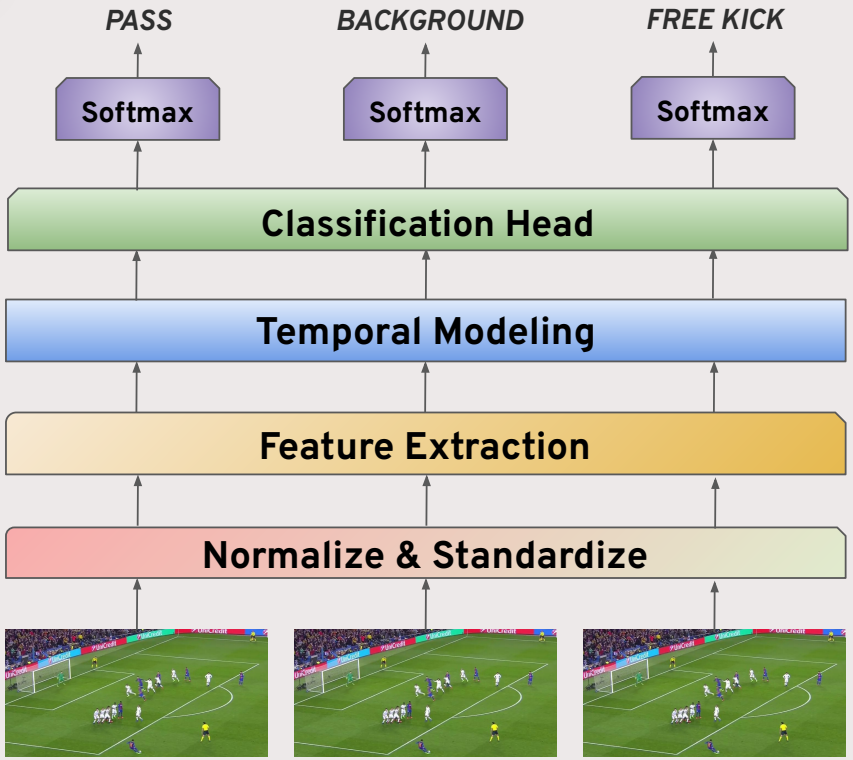

Technical details:

Feature Extraction:
- RegNet-Y (800MF).

Temporal Modeling:
- A bidirectional GRU layer.

Classification Head:
- A fully-connected layer.

Loss:
- Focal Loss.

Chung et al. (2014). Empirical Evaluation of GRUs. In NeurIPS.
Lin et al. (2017). Focal Loss for Dense Object Detection. In ICCV.
Radosavovic et al. (2020). Designing Network Design Spaces. In CVPR.

W6: Spotting I

Takeaways:

- ➔ In our setting, GRU outperforms attention-based temporal modeling due to its inductive bias.
- ➔ As suggested before, convolutional backbones are more efficient with this data.
- ➔ Focal loss helps mitigating data imbalance (though minor impact).

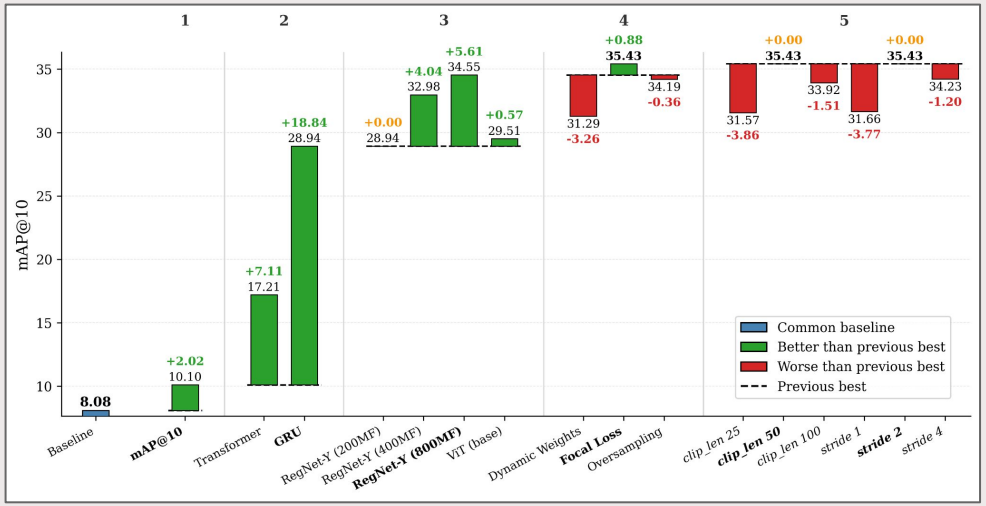

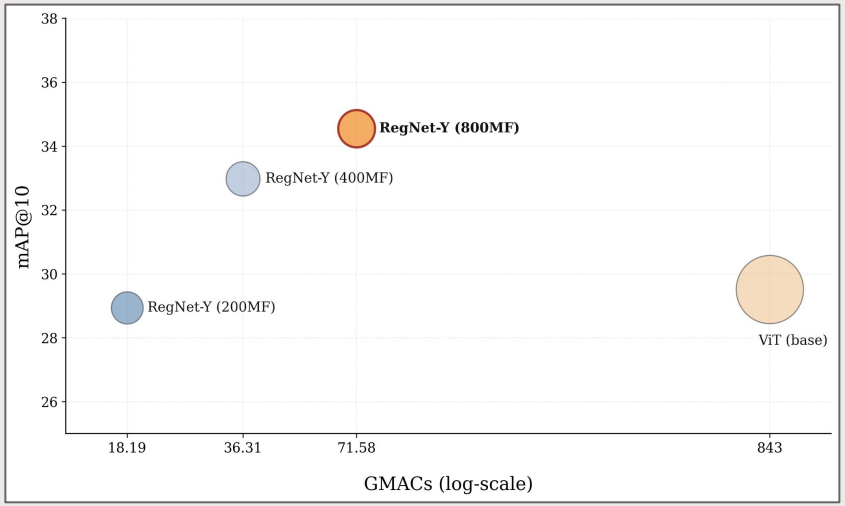

W6: Spotting I

Takeaways:

- ➔ In our setting, GRU outperforms attention-based temporal modeling due to its inductive bias.
- ➔ As suggested before, convolutional backbones are more efficient with this data.
- ➔ Focal loss helps mitigating data imbalance (though minor impact).

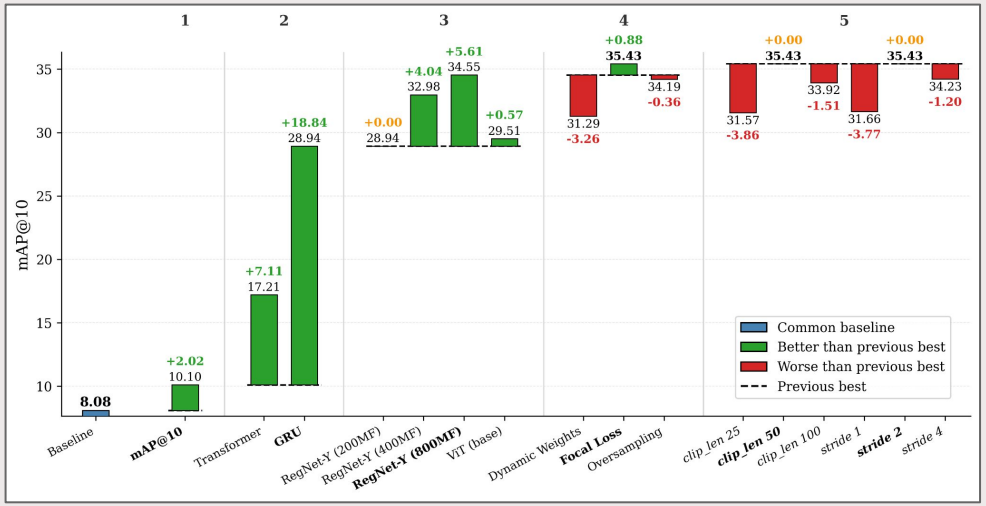

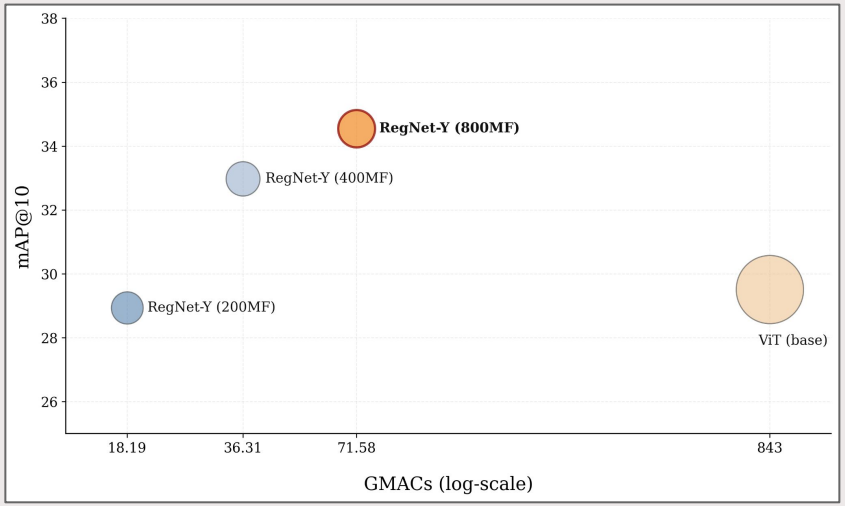

Still, we do not perform spatiotemporal feature extraction!

Contents

01 Introduction

02 Previous Weeks

03 DETR

04 Best Model

05 Final Results

06 Conclusions

DETR: Model

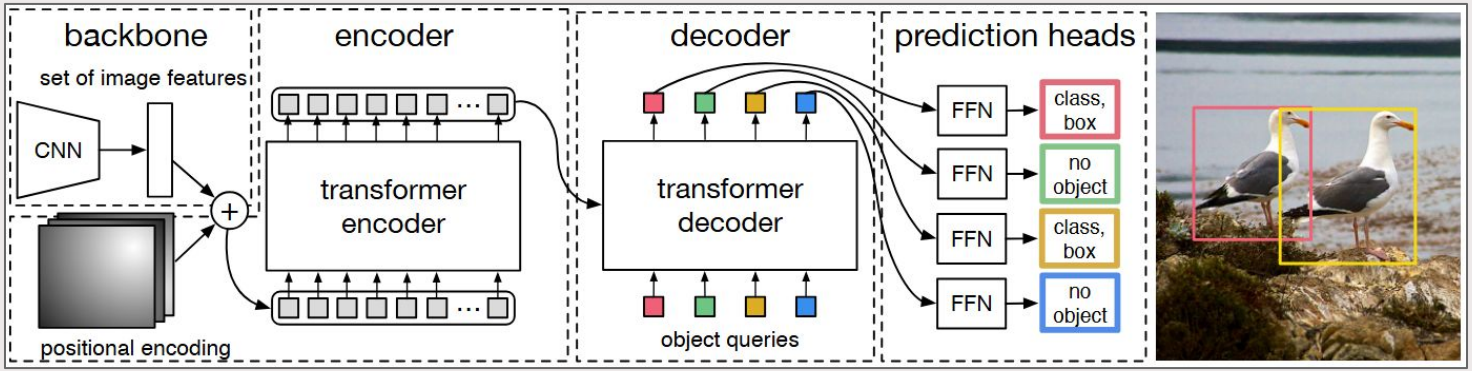

Carion et al. (2020). End-to-end object detection with transformers. In ECCV.
Liu et al. (2025). Boosting Point-Supervised Temporal Action Localization through Integrating Query Reformation and Optimal Transport. In CVPR.

DETR: Model

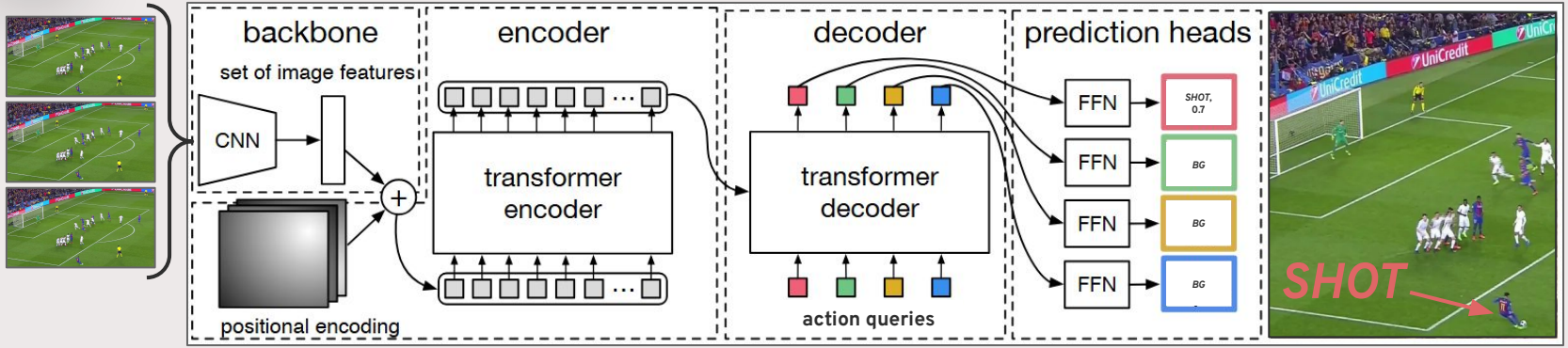

Carion et al. (2020). End-to-end object detection with transformers. In ECCV.
Liu et al. (2025). Boosting Point-Supervised Temporal Action Localization through Integrating Query Reformation and Optimal Transport. In CVPR.

DETR: Model

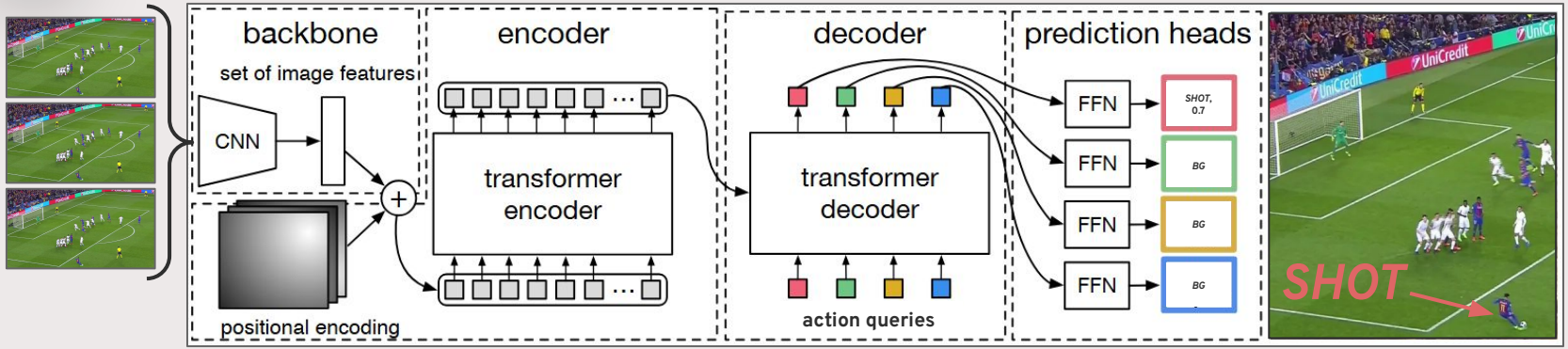

Technical details:

- **Backbone:** RegNet-Y (200MF) / RegNet-Y (800MF) / X3D-M
- **Encoder:** 2-4 transformer layers
- **Decoder**: 2-4 transformer layers *(# of queries: 10-50).*
- **Set-based classification:** Hungarian Matching between predictions and GT.
- **Temporal regression:** L1 loss for predicting normalized position within the clip*.

** The L1 loss is only computed for queries matched to a GT via Hungarian Matching.*

Carion et al. (2020). End-to-end object detection with transformers. In ECCV.
Liu et al. (2025). Boosting Point-Supervised Temporal Action Localization through Integrating Query Reformation and Optimal Transport. In CVPR.

DETR: Model

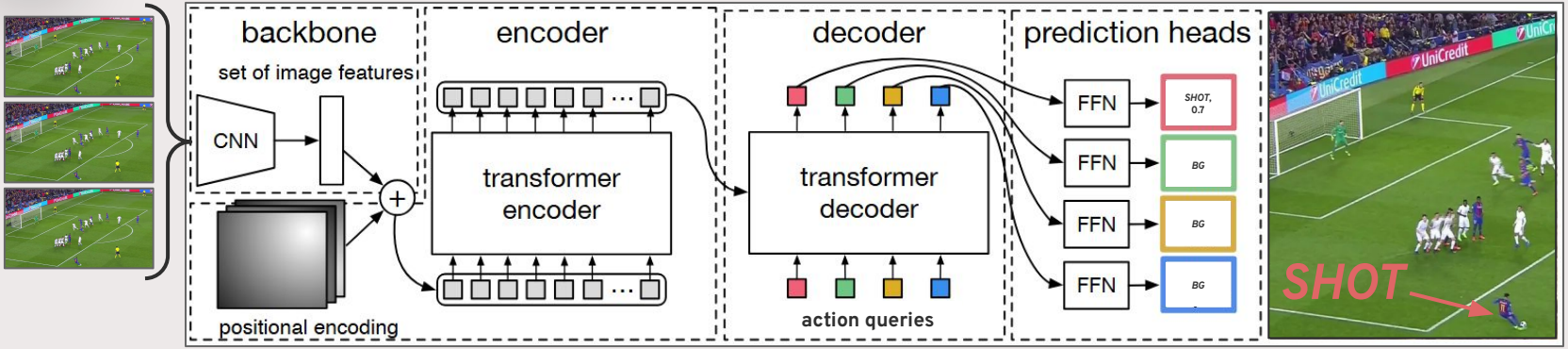

Technical details:

- **Backbone:** RegNet-Y (200MF) / RegNet-Y (800MF) / X3D-M
- **Encoder:** 2-4 transformer layers
- **Decoder:** 2-4 transformer layers *(# of queries: 10-50).*
- **Set-based classification:** Hungarian Matching between predictions and GT.
- **Temporal regression:** L1 loss for predicting normalized position within the clip*.

** The L1 loss is only computed for queries matched to a GT via Hungarian Matching.*

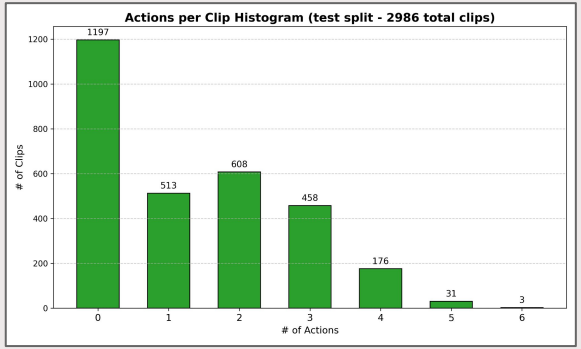

Carion et al. (2020). End-to-end object detection with transformers. In ECCV.
Liu et al. (2025). Boosting Point-Supervised Temporal Action Localization through Integrating Query Reformation and Optimal Transport. In CVPR.

DETR: Model

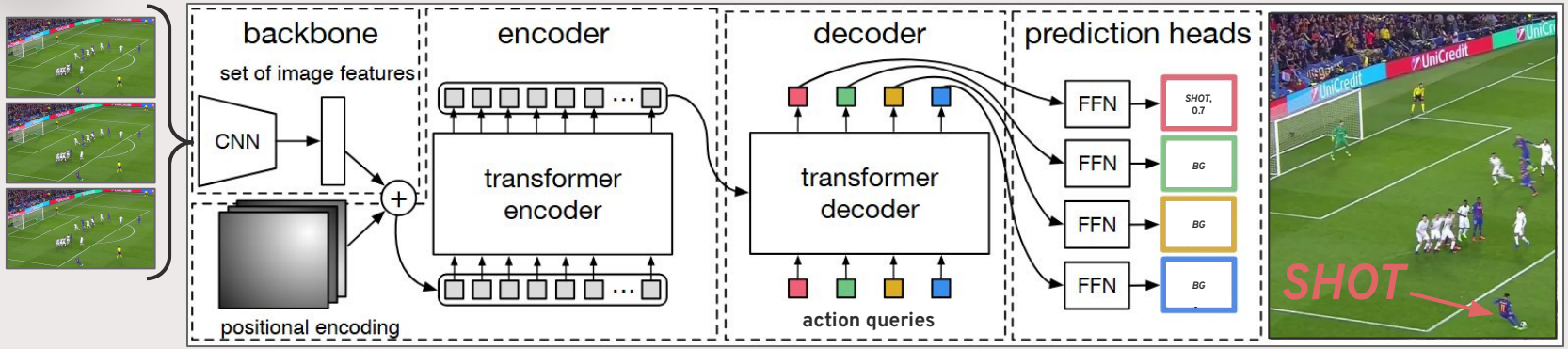

Technical details:

- **Backbone Learning Rate:** 1e-5.
- **Encoder/Decoder Learning Rate:** 1e-4.
- **Cross-Entropy VS Focal loss:** Cross-Entropy (less weight to *BACKGROUND*).
- **Loss balancing:** $T_{TOTAL} = T_{CLASS} + \lambda T_{TIME}$ → $\lambda = 0.5$ worked the best.

→ Bigger backbones did not help → Not enough supervision from set-based loss.
→ Also tried to completely freeze the backbone, training the encoder/decoder only.

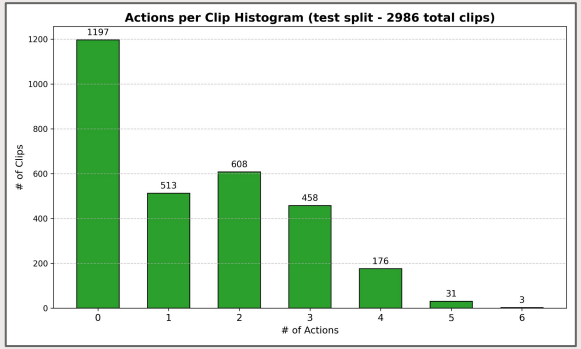

Carion et al. (2020). End-to-end object detection with transformers. In ECCV.
Liu et al. (2025). Boosting Point-Supervised Temporal Action Localization through Integrating Query Reformation and Optimal Transport. In CVPR.

DETR: Results

Takeaways:

- ➔ Performance fell short of our expectations & W6 best model (but improved over the baseline).
- ➔ The model correctly identifies a *PASS*, but at the cost of high FPs at strict tolerances (0.5s).
- ➔ As evaluation tolerance increases, mAP improves → The model lacks high temporal precision.

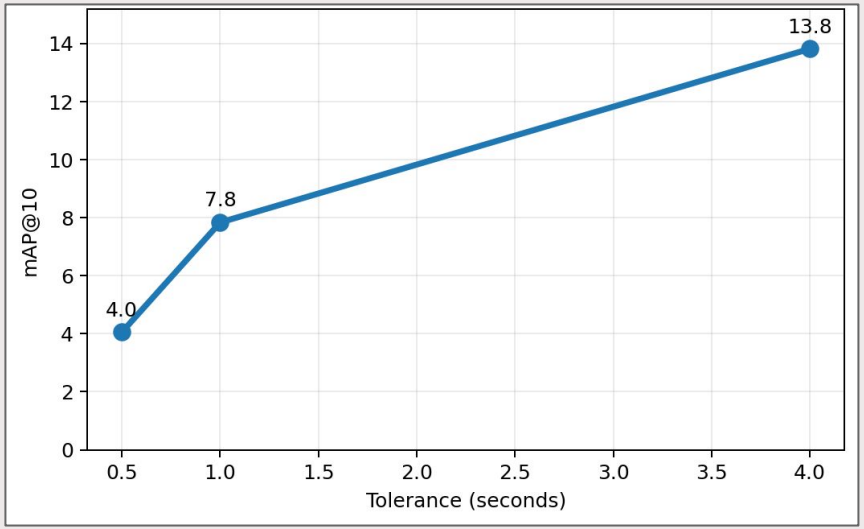

DETR: Analysis

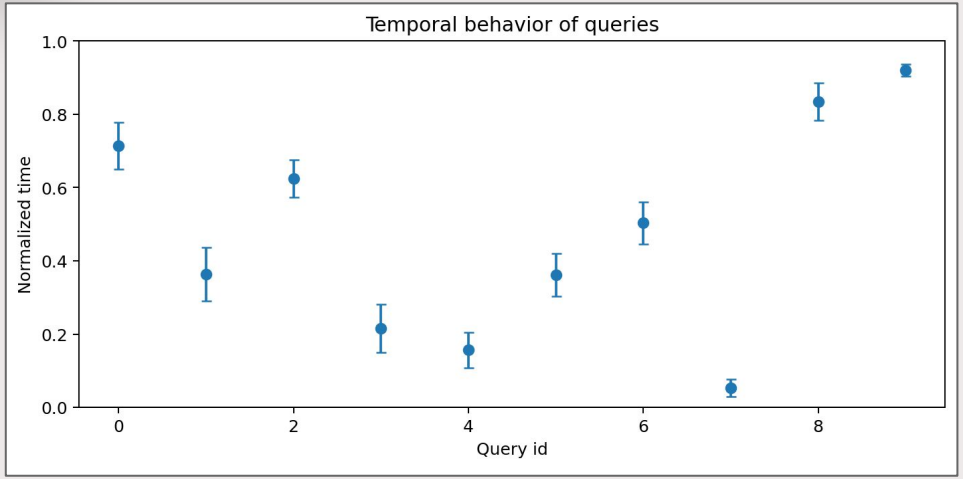

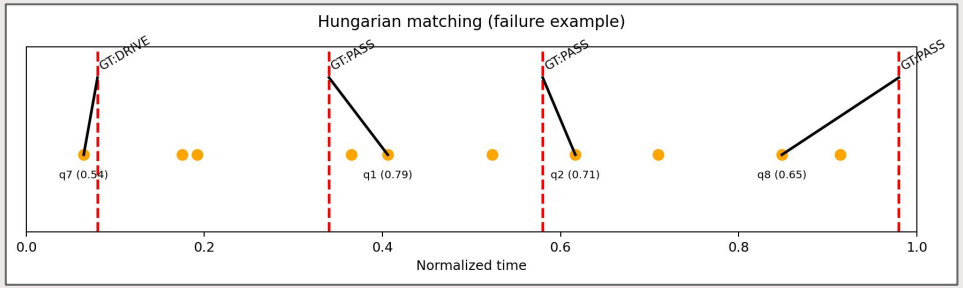

Queries learn fixed temporal slots instead of accurately detecting events!

- ➔ Queries are clustered at fixed positions.
- ➔ They do not adapt to event timing.
- ➔ Hungarian Matching globally assigns events, making localization inaccurate.

Conclusion: Queries specialize to fixed regions. They act like predefined anchors!

DETR: Analysis

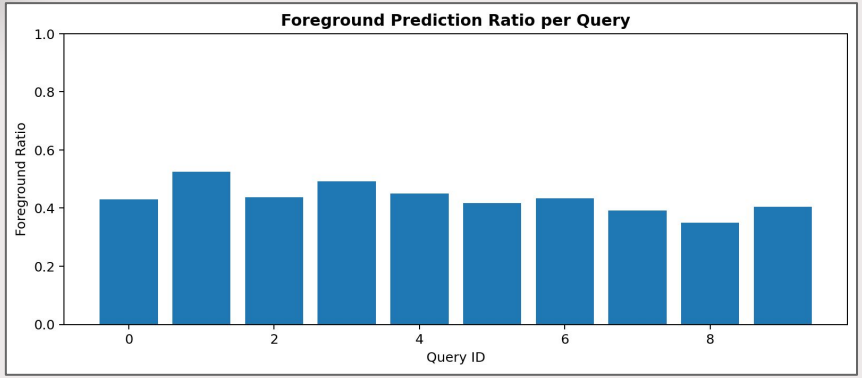

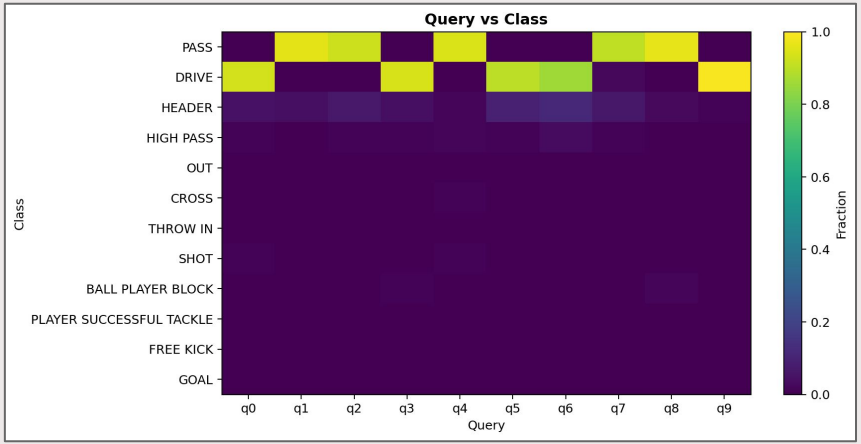

Queries are active but collapse to dominant classes

- ➔ Queries do predict actual ball actions.
- ➔ No *BACKGROUND* collapse.
- ➔ Queries are not specialized by class.

Conclusion: Queries are active but not diverse, collapsing to dominant classes.

Contents

01 Introduction

02 Previous Weeks

03 DETR

04 Best Model

05 Final Results

06 Conclusions

Best Model

➔ How to further improve our W6 model?

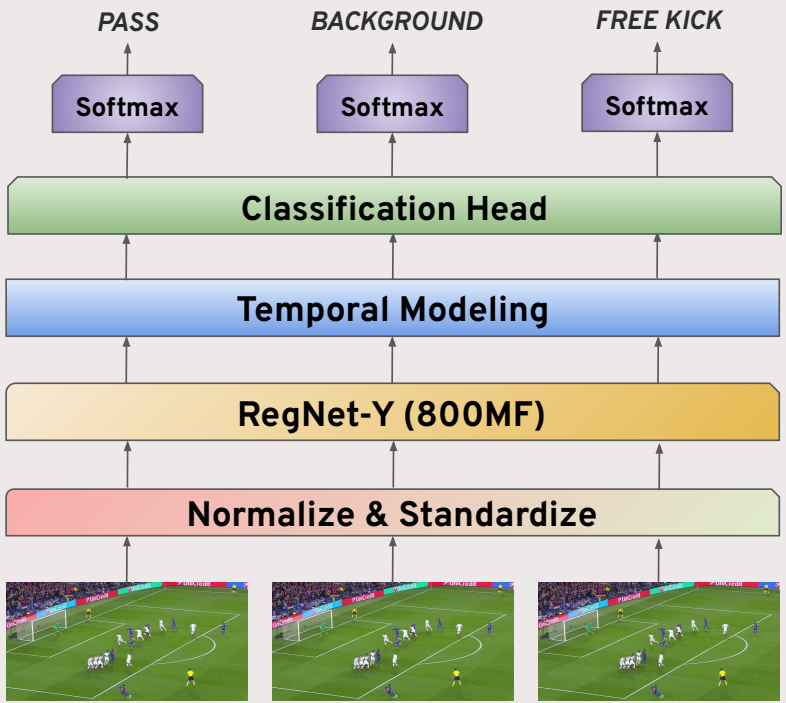

Best Model

➔ How to further improve our W6 model? **Extract spatio-temporal features, as Team 2!**

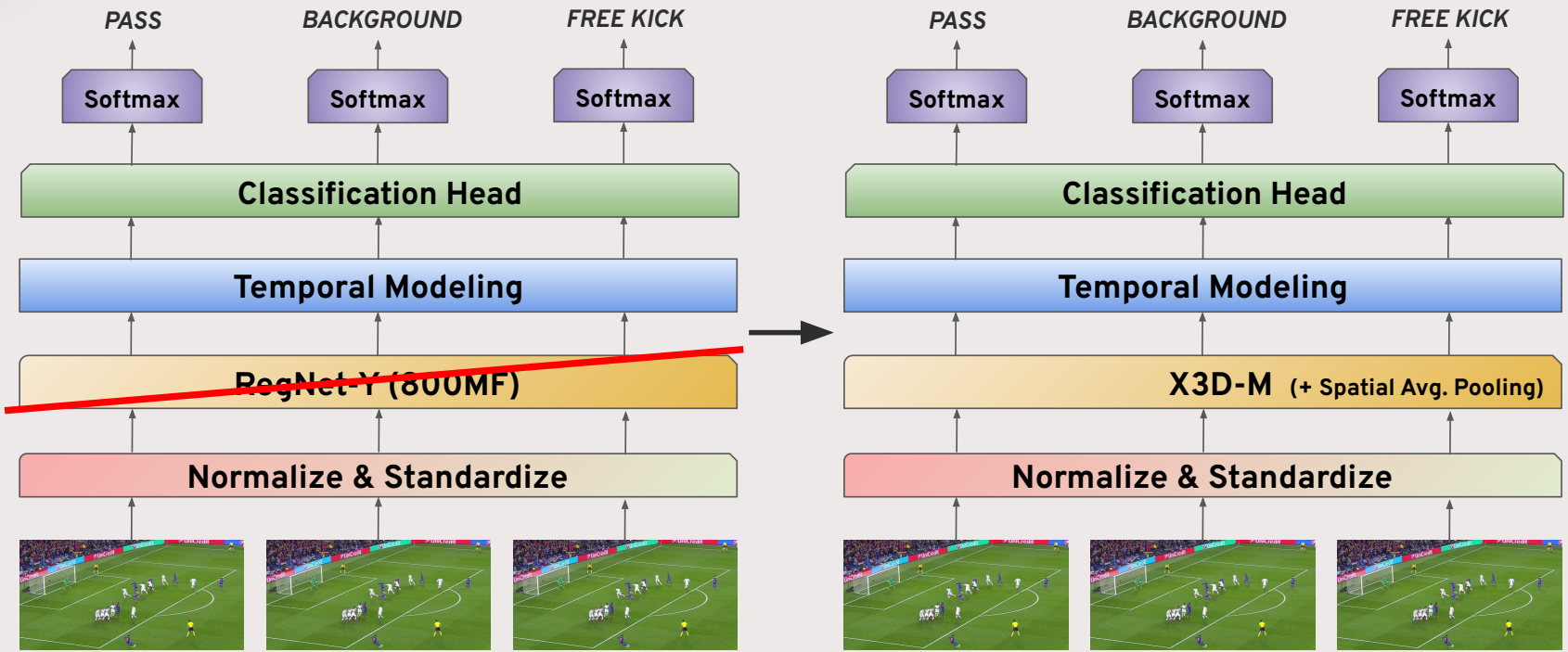

Feichtenhofer et al. (2020). X3D: Expanding architectures for efficient video recognition. In CVPR.

Best Model: Ablations

NOTE: Diagrams adapted from Team 2's W6 report.

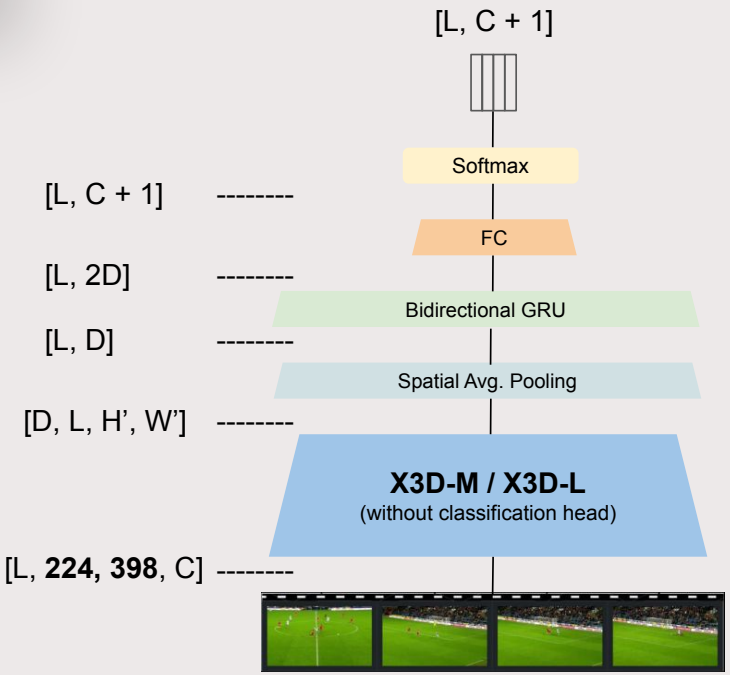

X3D-M & X3D-L

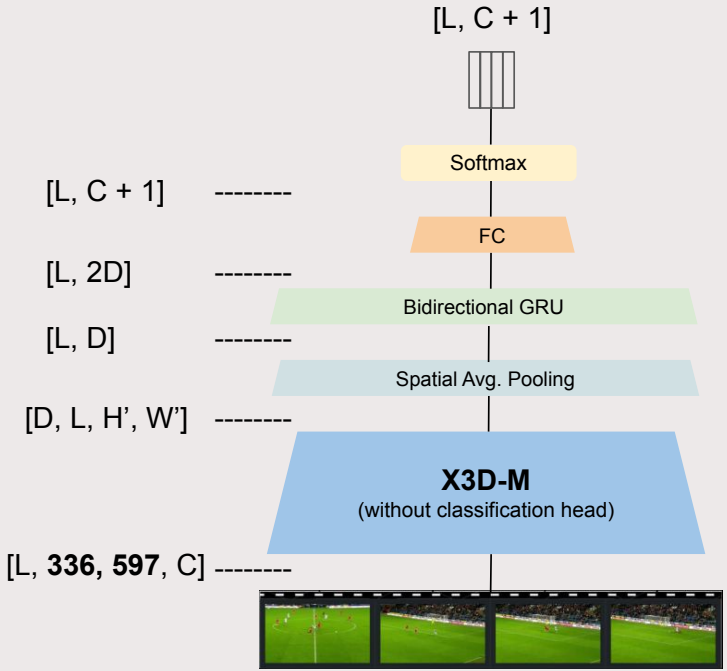

X3D-M (res+)

Best Model: Ablations

- ➔ Spatiotemporal modeling improves performance.
- ➔ Increasing or compressing time dimension does not help.
- ➔ Better efficiency-performance trade-off.

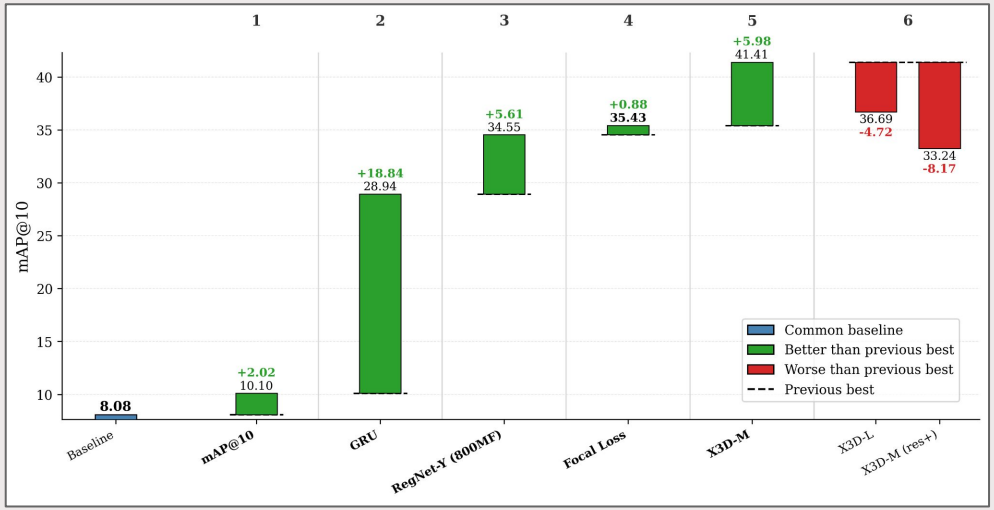

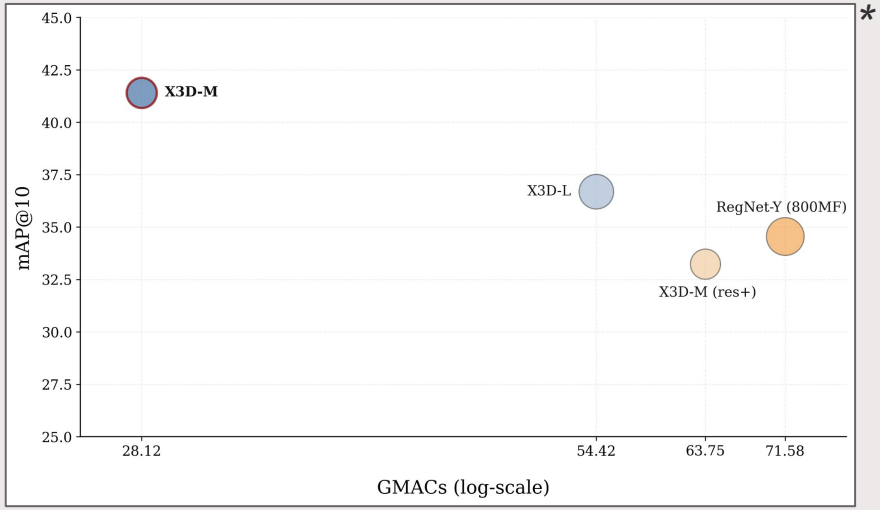

** Size is proportional to the amount of parameters.*

Contents

01 Introduction

02 Previous Weeks

03 DETR

04 Best Model

05 Final Results

06 Conclusions

Temporal Comparison

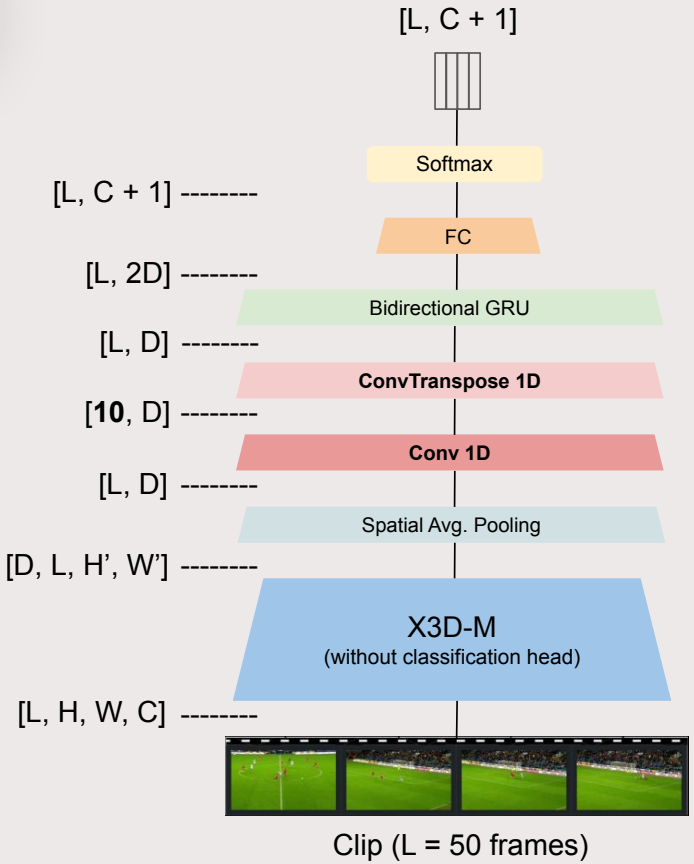

Temporal Bottleneck	# parameters	AP10@0.5s	AP10@1s
X	3.26M	37.23	41.41
✓	3.63M	36.36 (-0.87)	40.89 (-0.52)

- ➔ Reduced the temporal dimension by 5x (L=50 → L'=10).
- ➔ The temporal bottleneck slightly decreases performance.
- ➔ The X3D backbone provides enough spatiotemporal information to reconstruct the timeline despite temporal compression.

Final Results

Class	Baseline	W6 best	W7 best
PASS	27.66	68.16	**72.88**
DRIVE	15.51	61.26	**65.94**
HEADER	9.09	44.63	**50.54**
HIGH PASS	10.37	**60.04**	59.61
OUT	1.48	**15.03**	13.03
CROSS	10.24	35.97	**49.95**
THROW IN	6.48	34.31	**57.85**
SHOT	0	25.22	**34.27**
BALL PLAYER BLOCK	0	8.75	**9.01**
PLAYER SUCCESSFUL TACKLE	0	0.87	**1.00**
FREE KICK	0	***69.70***	10.91
GOAL	0	2.42	***6.06***
mAP@10	8.08	35.43	**41.41**

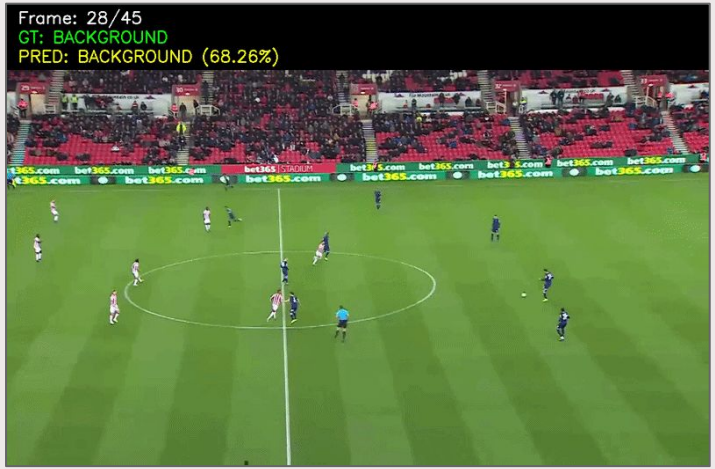

Contents

01 Introduction

02 Previous Weeks

03 DETR

04 Best Model

05 Final Results

06 Conclusions

Conclusions

1. **Video Analysis != 2D Feature Extraction + Temporal Aggregation**
   - Prioritize simultaneous capture
     - Extracting motion & appearance together beats late temporal fusion.
2. **Action Spotting Challenges**
   - DETR approach
     - The signal from the set-based loss is not enough to learn ball actions.
   - Data imbalance
     - Suppressing bias toward majority classes remains a major barrier.
3. **Inductive Bias with Limited Data**
   - CNNs > ViTs
     - The computational overhead for ViTs is not worth in this setting.
   - Bidirectional GRU > Temporal attention
     - The sequential prior in GRU allows more stable learning.

Future Work

1. **DETR:**
   - Increase the supervision in classification, reducing the instability of set-based matching.
2. **Precise Event Spotting:**
   - Global high resolution adds background noise, hurting both performance and efficiency.
   - Dynamically allocate computational resolution to *zoom* into high-interest spatial/temporal regions, keeping the global backbone fast and efficient.

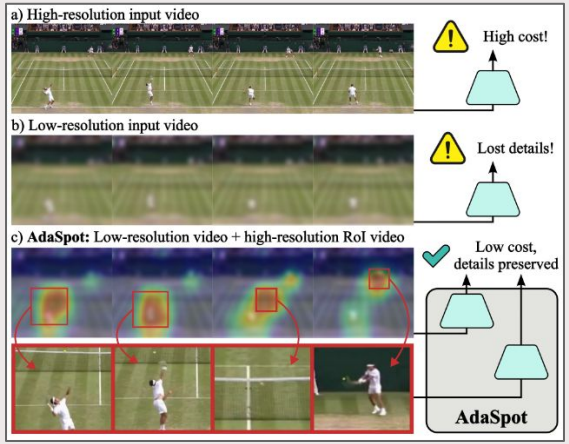

Xarles et al. (2026). AdaSpot: Spend Resolution Where It Matters for Precise Event Spotting. arXiv preprint arXiv:2602.22073.

MASTER IN COMPUTER VISION Barcelona

Ball Action Detection

Classification & Spotting

Group 1

Benet Ramió · Diego Hernández · Valentin Micu · Xavier Pacheco · Oriol Juan

Module C6: Video Analysis