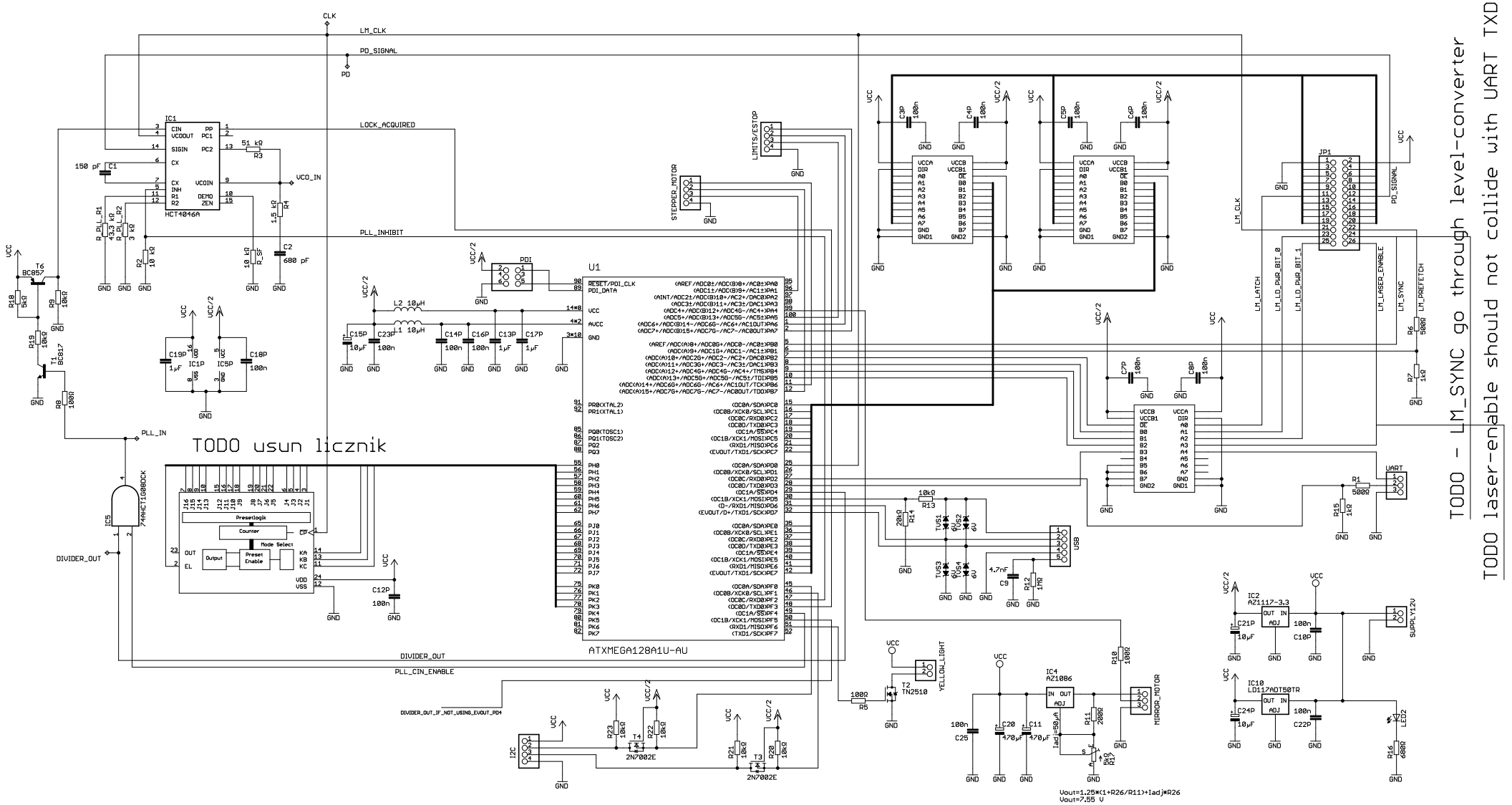
TODO - LM_SYNC go through level-converter
TODO laser-enable should not collide with UART TXD
TODO usun licznik
IC1
HCT4046A
U1
ATXMEGA128A1U-AU
JP1
IC2
AZ1117-3.3
IC10
LD1117ADT50TR
IC4
AZ1086
Vout=1.25*(1+R26/R11)+Iadj*R26
Vout=7.55 V
CLK
LM_CLK
PD_SIGNAL
PD
LOCK_ACQUIRED
VCO_IN
PLL_INHIBIT
PLL_IN
DIVIDER_OUT
PLL_CIN_ENABLE
DIVIDER_OUT_IF_NOT_USING_EVOUT_PD1
LM_LATCH
LM_LD_PWR_BIT_0
LM_LD_PWR_BIT_1
LM_LASER_ENABLE
LM_SYNC
LM_PREFETCH
VCC
GND
VCC/2